U.S. Coast Guard Research and Development Center
1082 Shennecossett Road, Groton, CT 06340-6096

Report No. CG-D-11-01

CODES AND STANDARDS FOR MARINE FUEL CELLS

FINAL REPORT
February 2001

DISTRIBUTION STATEMENT A
Approved for Public Release
Distribution Unlimited

This document is available to the U.S. public through the
National Technical Information Service, Springfield, VA 22161

Prepared for:

U.S. Department of Transportation
United States Coast Guard
Operations (G-O)
Washington, DC 20593-0001

20010711 099

N O T I C E

This document is disseminated under the sponsorship of the Department of Transportation in the interest of information exchange. The United States Government assumes no liability for its contents or use thereof.

The United States Government does not endorse products or manufacturers. Trade or manufacturers' names appear herein solely because they are considered essential to the object of this report.

This report does not constitute a standard, specification, or regulation.

Marc B. Mandler, Ph.D.
Technical Director
United States Coast Guard
Research & Development Center
1082 Shennecossett Road
Groton, CT 06340-6096

Technical Report Documentation Page

1. Report No. CG-D-11-01	2. Government Accession Number	3. Recipient's Catalog No.
4. Title and Subtitle Codes and Standards for Marine Fuel Cells		5. Report Date February 2001 6. Performing Organization Code Project No. 3310.2
7. Author(s) Amann, J., C. Artze, M. Badal, J. Haider, and R. Whitfield		8. Performing Organization Report No.
9. Performing Organization Name and Address John J. McMullen Associates, Inc. 4300 King Street, Suite 400 Alexandria, VA 22302	U.S. Coast Guard Research and Development Center 1082 Shennecossett Road Groton, CT 06340-6096	10. Work Unit No. (TRAIS) 11. Contract or Grant No. T.O. DTCG39-00-F-000018
12. Sponsoring Organization Name and Address U.S. Department of Transportation United States Coast Guard Operations (G-O) U.S. Coast Guard Headquarters Washington, DC 20593-0001		13. Type of Report & Period Covered Final, July 2000 – February 2001 14. Sponsoring Agency Code Commandant (G-OCU-1) U.S. Coast Guard Headquarters Washington, DC 20593-0001

15. Supplementary Notes

The R&D Center's technical point of contact is Robert D. Sedat, 860-441-2684, email: rsedat@rdc.uscg.mil.

16. Abstract (MAXIMUM 200 WORDS)

This report documents a survey of U.S. and international regulatory bodies, government agencies, and commercial and military sources for existing and developing codes and standards applicable to marine fuel cell power plants. The survey is part of the joint U.S. Navy/U.S. Coast Guard program to develop fuel cells for marine propulsion and electrical power generation applications. Standards tailored to marine fuel cell design and construction, installation, and operation do not currently exist. Existing land-based fuel cell standards and marine standards for balance of plant systems are examined for potential applicability to marine fuel cells. The report appendices include excerpts of these standards. In addition, standard development efforts by international committees and ship classification societies are documented.

The report outlines an approach to develop a unified standard governing marine fuel cells. A partnership between fuel cell manufacturers, shipbuilders, government regulatory bodies, and ship classification societies is recommended to facilitate integration of requirements unique to fuel cells with requirements specific to machinery systems operating in the marine environment. The unified standard would address, as a minimum, fuel cell design and manufacture, installation, safety, training, and plant performance evaluation.

17. Key Words prime mover, fuel cell, marine, standards, codes		18. Distribution Statement This document is available to the U.S. public through the National Technical Information Service, Springfield, VA 22161	
19. Security Class (This Report) UNCLASSIFIED	20. Security Class (This Page) UNCLASSIFIED	21. No of Pages 324	22. Price

Form DOT F 1700.7 (8/72) Reproduction of form and completed page is authorized

[This page intentionally left blank.]

EXECUTIVE SUMMARY

This report documents a survey of U.S. and international regulatory bodies, government agencies, and commercial and military sources for existing and developing codes and standards applicable to marine fuel cell power plants. The survey is part of the joint U.S. Navy/U.S. Coast Guard program to develop fuel cells for marine propulsion and electrical power generation applications. While the use of fuel cells is becoming more widespread in land-based applications, marine fuel cells are currently developmental. This codes and standards survey is an essential step leading toward commercial F/C power plants for marine applications.

The report identifies numerous land-based standards which were reviewed and summarized, including American National Standards Institute standard ANSI Z21.83, "Fuel Cell Power Plants," and National Fire Protection Association standard NFPA 853, "Standard for the Installation of Stationary Fuel Cell Power Plants." Second tier standards referenced by the fuel cell standards and other standards addressing balance of plant (BOP) systems and components were identified, reviewed, and summarized. In a similar manner, numerous marine standards were reviewed to identify standards specific to fuel cells and requirements concerning BOP and associated ship systems and components. The report identifies the marine standards that contain requirements potentially applicable to fuel cells. Ship classification societies were contacted to determine their efforts to develop marine fuel cell standards and the report identifies these efforts.

From this survey, it is concluded that existing standards or codes specifically addressing design and installation requirements for marine-based fuel cells do not exist at this time. While significant efforts have been undertaken in recent years to develop land-based standards, the application of these standards for marine fuel cells does not generally address the dynamic aspects and complexities inherent in modern ship design and operation. However, the existing land-based fuel cell standards and applicable marine standards for BOP and associated ship systems and components could form the basis for a unified standard for marine fuel cells. The report appendices identify and include excerpts of these standards.

The report outlines an approach to develop a unified standard governing marine fuel cells. A partnership between fuel cell manufacturers, shipbuilders, government regulatory bodies, and ship classification societies is recommended to facilitate integration of requirements unique to fuel cells with requirements specific to machinery systems operating in the marine environment. The unified standard would, as a minimum, address fuel cell design and manufacture, installation, training, safety, and plant performance evaluation.

TABLE OF CONTENTS

SECTION **PAGE**

EXECUTIVE SUMMARY v
1.0 INTRODUCTION 1
2.0 BACKGROUND AND APPROACH 1
3.0 DISCUSSION OF FINDINGS 4
4.0 CONCLUSIONS AND RECOMMENDATIONS 11
5.0 REFERENCES 13
APPENDIX A: Summary of Codes and Standards for Fuel Cells, Land-Based A-1
APPENDIX B: Summary of Codes and Standards Potentially Applicable to Fuel Cells, Marine-Based B-1
APPENDIX C: Review of "An Evaluation of Fuel Cells for Commercial Ship Applications" (Ref. 2) C-1
APPENDIX D: Review of "Integration of Hydrogen Technology into Maritime Applications" (Ref. 6) D-1
APPENDIX E: Survey of Ship Classification Society Fuel Cell Requirements E-1
APPENDIX F: Reference Catalog of Codes and Standards F-1

LIST OF FIGURES

FIGURE **PAGE**

Figure 1. Simplified Schematic of MCFC Fuel Cell 2

LIST OF TABLES

TABLE **PAGE**

Table 1. Summary of SWBS Categories and Topics 7
Table A1. Summary of Codes and Standards for Fuel Cells, Land-Based A-1
Table B1. Summary of Codes and Standards Potentially Applicable to Fuel Cells, Marine-Based B-1
Table E1. Survey of Ship Classification Society Fuel Cell Requirements E-1
Table F1. Reference Catalog of Codes and Standards F-1

LIST OF ABBREVIATIONS AND ACRONYMS

ABYC	American Boat and Yacht Council
ABS	American Bureau of Shipping
AC	Alternating Current
ACC	ABS Classification for Automated or Remote Control and Monitoring Systems Complying with ABS Part 4, Sect. 11.7
ACCU	ABS Classification for Automated or Remote Control and Monitoring Systems Complying with ABS Part 4, Sect. 11.9
ANSI	American National Standards Institute
ASCE	American Society of Civil Engineers
ASME	American Society of Mechanical Engineers
ASTM	American Society for Testing and Materials
AWWA	American Water Works Association
bar	1 bar = 100 kPa
BOP	Balance of Plant
BPVC	Boiler and Pressure Vessels Code
Btu	British Thermal Unit
C	Centigrade
C	Corrosion Allowance
CFR	Code of Federal Regulations
CG	Coast Guard
CGA	Compressed Gas Association
CNG	Compressed Natural Gas
CO	Carbon Monoxide
CO_2	Carbon Dioxide
Cont.	Continue(d)
dB(A)	Decibel (Acoustic)
DC	Direct Current
D.C.	Damage Control
deg.	Degrees
DFC	Direct Fuel Cell

DIM	Distributed Isolation Mount
DOE	Department of Energy
DOT	Department of Transportation
EC	Electronic Copy (document media)
ECC	Engineering Control Center
EMI	Electromagnetic Interference
EOS	Enclosed Operating Station
EPA	Environmental Protection Agency
F	Fahrenheit
FCE	Fuel Cell Energy, Incorporated
FED SPEC	U.S. Federal Specifications
FMEA	Failure Mode and Effects Analysis
ft	feet
g	Grams
g	Acceleration due to gravity
GENSPEC	General Specifications for Ships of the United States Navy
GER	Germany
GL	Germanischer Lloyd
h	Hour(s)
HC	Hydrocarbons
HC	Hard Copy (document media)
hp	Horsepower
HPU	Hydraulic Power Unit
HVAC	Heating, Ventilation and Air Conditioning
Hz	Hertz
IAW	in accordance with
ICBO	International Conference of Building Officials
IEC	International Electrotechnical Committee
IEEE	Institute of Electrical and Electronic Engineers
IMO	International Maritime Organization
in^2	square inch(es)
Inc.	Incorporated

IP	International Protocal
ISO	International Standardization Organization
JPN	Japan
kW	Kilowatt(s)
kVA	Kilovolt-Amperes
lb	Pound(s)
kgf	kilogram-force
kgf/cm^2	kilogram-force per square centimeter
kPa	Kilopascal(s)
LPG	Liquified Petroleum Gas
MΩ	Megohm
MA	Managing Activity
MARPOL	Protocal adopted by the International Convention for the Prevention of Pollution from Ships
MCCS	Machinery Centralized Control System
MCFC	Molten Carbonate Fuel Cell
MCR	Maximum Continuous Rating
MGO	Marine Gas Oil
Mil. Spec.	U. S. Military Specification
MIL-STD-xxx	U. S. Military Standard No. xxx
mm	millimeter
MPa	Megapascals (10^6 pascals)
MPCMS	Machinery Plant Control and Monitoring System
MSS-SP-xx	Manufacturers Standardization Society of the Valve and Fittings Industry, Inc., Specification Number xx
NATO	North Atlantic Treaty Organization
NAVSEA	Naval Sea Systems Command
NAVSHIPS	Naval Ships Systems Command
NEMA	National Electrical Manufacturers Association
NFPA	National Fire Protection Association
NO_x	Nitrous Oxides
NPD	National Petroleum Distributors
O_2	Oxygen

OCMI	Officer in Charge, Marine Inspection
OSV	Offshore Supply Vessel
PAFC	Phosphoric Acid Fuel Cell
PCB	Polychlorinated Biphenyl
PEM	Proton Exchange Membrane
PEMFC	Proton Exchange Membrane Fuel Cell
psig	Pounds per square inch, gage
R&D Center	Research and Development Center
RFI	Radio Frequency Interference
rpm	Revolutions per minute
S	Effective Stress (design formula dependent)
SAE	Society of Automative Engineers
SE	Effective Stress (design formula dependent)
sec	second(s)
Sect.	Section
SIL	Speech Interference Level
SI Units	International System of Units (Le Systeme International d'Unites)
SNAME	Society of Naval Architects and Marine Engineers
SOFC	Solid-Oxide Ceramic Fuel Cell
SOLAS	Safety of Life at Sea
SOW	Statement of Work
SPL	Sound Pressure Level(s)
STD	Standard
SWBS	Ship Work Breakdown Structure
TLI	Tank Level Indicating
UL	Underwriters Laboratories
US	United States
U.S.	United States
U.S.C.	United States Code
USCG	United States Coast Guard
V	Volts
Vrms	Volts, square root of mean square

VAC	Volts, Alternating Current
WG	Working Group

[This page intentionally left blank.]

1.0 INTRODUCTION

This report documents a survey of U.S. and international regulatory bodies, government agencies, and commercial and military sources for existing and developing codes and standards applicable to land-based and marine-based fuel cell power plants, including balance of plant (BOP) subsystems. As current codes and standards specifically tailored for marine-based fuel cell plants are extremely limited, the larger body of existing naval and commercial regulatory body documentation concerning marine components and subsystems employed in traditional marine machinery plants is also surveyed for potential application to marine fuel cells. However, as some BOP components and system characteristics are unique to fuel cells, the potential application of traditional marine machinery requirements may not fully address all aspects and issues related to installation of fuel cells aboard ships. Consequently, the report identifies these areas that will require further focus in future efforts to develop standards for marine-based fuel cells. The survey of requirements and the recommended approach outlined herein together lay the groundwork for future efforts to develop a unified standard governing marine fuel cells.

2.0 BACKGROUND AND APPROACH

Relative to conventional power systems, fuel cells offer potential for reduced fuel consumption, fewer harmful emissions, and the use of alternative fuels. Other advantages include distributed, redundant architectures, and reduced thermal and acoustic signatures. This technology is currently being developed by the U.S. Navy and U.S. Coast Guard for use in marine powering and electrical generation applications.

The current marine fuel cell under development by the U.S. Navy and U.S. Coast Guard generates electrical power suitable for use in shipboard propulsion systems and ship service electrical power distribution systems. This plant operates on marine Navy logistics diesel fuel (NATO F-76), and consists of the fuel cell stack and BOP. The BOP generally includes a fuel pre-processing (desulfurization) system to lower the fuel sulfur content to allowable limits for fuel cell plant operation because desulfurized fuel is not readily available. While the NATO F-76 specification allows a maximum of 1.0 percent sulfur content by weight, fuel cells require fuel virtually free of sulfur (content on the order of 0.1 to 1 ppm). The U.S. Navy/U.S. Coast Guard fuel cell plant utilizes an onboard desulfurization system to pre-process the fuel. Therefore, other subsystems included in the BOP are a reformer system to convert the diesel fuel into gaseous constituents suitable for use by the fuel cell; steam and condensate systems; heat exchangers; an air handling system, and a power conversion system which converts direct current (DC) power produced by the fuel cell into alternating current (AC) for ship service distribution. A simplified schematic of the fuel cell stack and BOP for the molten carbonate type fuel cell (MCFC) power plant currently under development by Fuel Cell Energy Corporation (FCE) for the U.S. Navy is shown in Figure 1. Other fluid, control, and electrical subsystems are required on the vessel to support the fuel cell plant installation, though these systems may be supplied by the shipbuilder and would not necessarily be provided with the fuel cell package by its manufacturer. These include support systems normally associated with traditional marine diesel generator plants, including fuel service, freshwater and/or seawater cooling, ventilation, firefighting, electrical power, and controls. In addition, a fuel cell inerting system, typically a nitrogen producing or storage system, is required onboard to inert the fuel cell when the system

is secured. Depending on the design of the fuel cell plant, these systems may be packaged with the BOP. The FCE fuel cell includes firefighting, controls, and nitrogen inerting systems, which are integrated into the fuel cell module with storage/supply from the vessel's auxiliary systems.

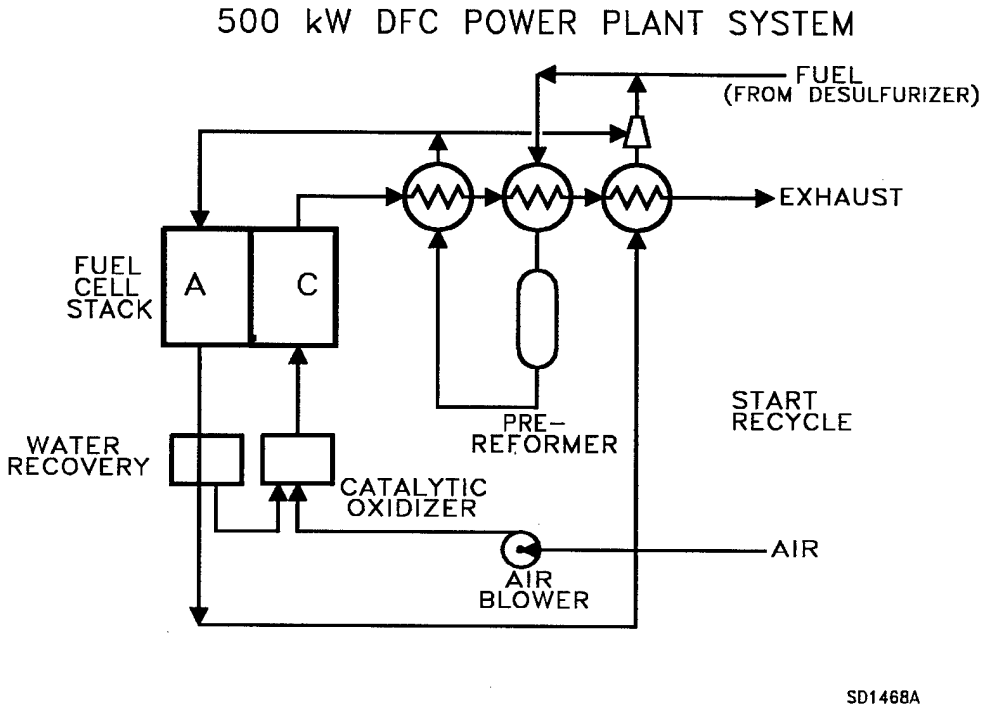

Figure 1. Simplified Schematic of MCFC Fuel Cell.

The application of fuel cells in the marine environment is largely developmental compared to conventional electrical power generating systems, and land-based fuel cells. Consequently, there are few existing regulations or standards which specifically govern the design, construction, and operation of these plants for marine applications. However, current land-based standards governing the design, construction, installation, and operation of fuel cells associated with stationary electric power plants and mobile power sources used for transportation may be suitable for adaptation to the marine environment. In addition, many marine-based standards do exist for BOP components and interfacing ship subsystems, and hence many existing regulations intended for traditional marine machinery plants may potentially be applied to marine fuel cells and its BOP.

In order to support shipboard implementation of this technology in a safe and reliable manner, a survey of existing regulations and standards specifically governing fuel cells, both land-based and marine-based, was performed. This survey included related requirements for traditional plant components and systems which might be potentially applicable to fuel cells plants. In addition, ongoing and future efforts by regulatory bodies, standards organizations, and classification societies to develop fuel cell standards and requirements are identified. From this effort, the need for development of a unified code is assessed and a recommended approach for

developing such a code is outlined for future use. In support of these efforts, the following general approach was employed in conducting the survey.

- Numerous individuals and organizations were contacted to determine the major contributors to codes and standards development and the status of standards under their cognizance related to fuel cells and BOP. These included classification societies, standards organizations, government agencies, the Society of Naval Architects and Marine Engineers (SNAME), U.S. Coast Guard, U.S. Navy, and others.

- A literature search was conducted identifying codes and standards from both domestic and international agencies that are directly or may be indirectly applicable to land-based and marine-based fuel cell power plants. The literature search included the applicable documents listed in the Statement of Work (SOW), as well numerous second tier references and industry articles. References [1] through [30] constitute the primary references used in the survey. Additionally, second tier references invoked by the primary references are identified for future use, but were not reviewed in detail.

- For each primary reference, excerpts summarizing the requirements that are directly applicable or may be potentially applicable to land-based and marine-based fuel cells were developed for inclusion in the standards matrices. The land-based and marine-based standards matrices are presented in Appendix A and B, respectively. The land-based matrix is arranged by standard, and the marine-based matrix is arranged in ship work breakdown structure (SWBS) format.

- Although not standards per se, References [2] and [6] were reviewed to ascertain efforts conducted to date in applying existing standards to marine fuel cell installations. Brief summaries of References [2] and [6] were developed and are provided as Appendices C and D, respectively.

- Ship classification societies were contacted to provide the status of their efforts to develop fuel cell requirements and to summarize the content of these requirements. Appendix E gives contact information and provides the results of this survey for each of the classification societies.

- A list of all primary and second tier references identified as part of the literature search, with related points of contact, addresses, web sites, and purchasing information, was developed and is included in Appendix F.

- Technical and operational areas and issues unique to fuel cells that may not adequately be addressed by existing standards or the potential application of standards used for traditional marine machinery plants are identified.

- Based on the results of the survey, the need for a unified marine fuel cell standard was assessed, and a recommended approach was developed to facilitate development of unified U.S. and international standards governing marine fuel cells.

3.0 DISCUSSION OF FINDINGS

Summary of Land-Based Fuel Cell Standards – In general, fuel cell standards for land-based applications exist and are in a more advanced stage of development than fuel cell standards for marine-based applications. This can be attributed to the growing popularity of fuel cells in industrial, office, and health facilities as standby sources of emergency electrical power. The publications of numerous standards agencies and associations were surveyed, including American National Standards Institute (ANSI), American Society of Mechanical Engineers (ASME), Institute of Electrical and Electronic Engineers (IEEE), International Standardization Organization (ISO), National Fire Protection Association (NFPA), and Underwriters Laboratories (UL). A summary of the primary references applicable to land-based fuel cells and other related standards is presented in Appendix A.

One of the primary land-based fuel cell standards identified in the survey is ANSI Z21.83, "Fuel Cell Power Plants," Reference [4]. This publication provides a basic standard for the construction, safe operation, and acceptable performance of fuel cell power plants (either packaged, self-contained, or factory matched packages of integrated systems) producing power up to 1000 kW at up to 600 V and operating on gaseous hydrocarbon fuel. Part I of the standard addresses the construction of the power plant subsystems and includes requirements for the following:

- materials
- general construction and assembly
- enclosures and associated construction
- heaters and vessels
- piping (general, steam, vapor or liquid, and fuel gas) systems
- drain, venting and ventilation exhaust systems
- automatic ignition systems and gas-air control
- flame safeguards
- fuel gas controls and equipment
- air/fluid-handling equipment (valves and process controls)
- air/fluid-moving equipment, including pumps, fans, and blowers, and associated motors
- electrical equipment and wiring
- protection of service personnel
- electrical equipment safety circuit analysis
- installation instructions and maintenance manuals
- equipment marking

Part II of ANSI Z21.83 provides performance requirements and test methods for plants using natural gas or (LPG) and addresses the following:

- noise limits
- test gases and pressures
- basic test arrangements
- ultimate strength
- allowable leakage
- protection parameters (control limits)
- emission of effluents (CO)
- burner operating characteristics
- automatic ignition systems
- exhaust gas temperature
- surface and component temperatures
- electrical tests
- rain and wind tests (for outdoor plants)
- adhesion and legibility of marking materials.

The ANSI Z21.83 standard includes Exhibit A, titled "Electrical Equipment and Wiring," and Exhibit B, titled "List of Reference Standards," which references other ANSI, American Society of Civil Engineers (ASCE), ASME, ASTM, IEEE, ISO, American Society for Testing and Materials (ASTM), National Electrical Manufacturers Association (NEMA), NFPA, and UL standards. Part III of the standard outlines a quality assurance plan which guarantees uniform plant testing and verification. Part IV provides definitions used in the standard.

The second standard that specifically addresses land-based fuel cells is NFPA 853, "Standard for the Installation of Stationary Fuel Cell Power Plants," Reference [16]. This standard gives requirements applicable to the design, construction, and installation of stationary fuel cell power plants with a gross electrical generation that exceeds 50 kW including: (1) a singular prepackaged, self-contained power plant unit; (2) any combination of prepackaged, self-contained power plant units; (3) power plant units comprised of two or more factory matched modular components intended to be assembled in the field; and (4) engineered and field-constructed power plants that employ fuel cells. This standard does not apply to fuel cell power plants that are used on any mobile structure or vehicle, except to the degree that the structure or vehicle is made stationary. Chapter 2 of NFPA 853 provides a description of various configurations of fuel cells, to which various criteria are applied. These configurations include prepackaged self-contained, pre-engineered, and engineered and field-constructed fuel cell power plants. Chapter 3 provides criteria related to the siting of fuel cells in all locations as well as specific indoor, outdoor, and rooftop installations and interconnections with other building

systems. Chapter 4 covers fuel supplies and storage arrangements. Fuels addressed include natural gas, CNG, LPG, liquid and gaseous hydrogen, biogas, and liquid fuels. Chapter 5 addresses ventilation, exhaust, makeup air, and process purging and venting requirements for the plant installation. Chapter 6 covers fire protection and detection requirements for the site, mechanical and electrical equipment, and controls. Chapter 7 lists other referenced publications including other NFPA, ANSI, ASME, and ASTM publications and standards.

The land-based standards primarily address general requirements, materials of construction, BOP components, performance requirements, test methods and documentation for fuel cells, and are generally comprehensive with regard to treatment of systems unique to fuel cells. These standards include numerous second tier references to other ANSI, NFPA, and UL standards. Collectively, these standards address fuel cell design, construction and testing; electrical and BOP systems; fire protection, detection, and suppression; and construction of gaseous and liquid hydrogen handling systems. A listing of these primary and second tier references is provided in Appendix F.

While a myriad of standards related to fuel cells, electrical interfaces, and BOP exist, there is currently no concise approach to enable fuel cell manufacturers to ensure system compliance with regulations. Manufacturers must apply overlapping regulations (many under development) which address various levels of design detail and fall under various regulatory jurisdictions. In response to manufacturer concerns, the Department of Energy (DOE) has sponsored various Fuel Cell Summit conferences to foster cooperation between industry and government regulatory agencies, to unify standards development by the various agencies, to eliminate duplication of effort, and to facilitate industry compliance with standards for particular fuel cell installations. The stated goal of the Summits is "To develop an institutional, regulatory, and technical environment that supports the commercialization and deployment of fuel cell power-generation technologies for stationary, portable, and vehicular applications." References [20] through [25] present background information on this effort.

Summary of Marine Fuel Cell Standards – Based on feedback received from the various classification societies, as well as the literature search, there are currently no standards or codes specifically addressing design and installation requirements for marine fuel cells. Of the classification societies that responded to this survey, Germanischer Lloyd (GL) is in the forefront due to its participation in the ongoing German Navy submarine fuel cell program, and in several other naval and commercial efforts. This includes a recently awarded Greek Navy proton exchange membrane (PEM) fuel cell project, and work involving hydrogen generation and handling systems. GL plans to publish guidelines related to marine fuel cells in the latter half of 2001.

In general, existing standards related to traditional machinery plants need to be applied selectively for fuel cells, BOP components, and ship services to ensure fuel cells conform to established norms related to vessel safety and machinery plant reliability. To this end, an extensive review of existing naval and commercial marine standards used for traditional propulsion and electric power plants, which may potentially be applied to marine fuel cells and their installations aboard ship, was conducted and is presented in Appendix B. These standards and requirements are categorized into the general technical areas and topics listed in Table 1.

Table 1. Summary of SWBS Categories and Topics.

SWBS CATEGORY	TOPIC
020	Pollution prevention and control
070	General requirements for design and construction, including environmental conditions and ship motions
071	Personnel access
073	Noise, vibration and resilient mounts
200	General requirements for machinery plant
202	Machinery control system
233	Propulsion diesel engines (only to the extent of commonality of support services between diesel engines and fuel cells, and engine exhaust emission requirements)
234	Propulsion gas turbines (only to the extent of commonality of support services between gas turbines and fuel cells)
235	Electric propulsion and central power plant
251	Forced draft systems
252	Machinery control stations
253	Steam systems
256	Machinery seawater circulating and cooling water systems
259	Air intake and exhaust systems
300	General requirements for electric plant
302	Electric motors and associated equipment
303	Protective devices for electric circuits
304	Electric cable
305	Electrical and electronic designation and marking
310	Ship service and emergency generator sets
313	Storage batteries and servicing facilities
314	Electric power supply conversion equipment
320	General requirements for electric power distribution systems
324	Switchgear
502	Auxiliary machinery
503	Pumps
504	Instruments and instrument boards
505	General requirements for piping systems
506	Overflows and air escapes
507	Machinery and piping designation and marking
508	Thermal insulation for machinery, equipment and piping
509	Thermal insulation and acoustic absorptive treatment of ducts and trunks
512	Heating and ventilation systems in machinery spaces
541	Fuel systems
551	Compressed air systems for potential valve actuation systems
552	Compressed gas systems
556	Hydraulic systems for potential valve actuation systems

It should be noted that an extensive treatment of piping systems and pressure vessel requirements exist in current naval and commercial standards. Appendix B focuses primarily on the latter standards given the relative large market for fuel cells in commercial marine applications. While top level summaries of naval standards related to piping systems and pressure vessels have been included in Appendix B, it is suggested that Section 505 of Reference [5] and MIL-STD-777 be consulted should more detailed analysis of naval requirements be required.

Review of Other Literature - In addition to the review of literature related to standards, a variety of fuel cell articles and papers were reviewed to assess the status of industry efforts in implementing fuel cell technology. These articles are presented in References [19] through [30]. Most notably "An Evaluation of Fuel Cells for Commercial Ship Applications," presented in Reference [2] and reviewed in Appendix C, assesses the use of fuel cell technology in the commercial marine industry and evaluates several types of fuel cells for particular applications using a set of criteria. This reference provides guidance best used for fuel cell machinery plant feasibility design studies for either a new building or conversion project. However, it does not address standards that may be used for shipboard installation of fuel cells.

"Integration of Hydrogen Technology into Maritime Applications," presented in Reference [6] and reviewed in Appendix D, studies world emission requirements, identifies the impacts of a fuel cell plant retrofitted into an existing vessel, and provides a fuel cell installation specification tailored for the vessel. This reference may be very useful in future efforts, as it gives insight into the current and future applications of fuel cells, and identifies factors that need to be considered when ships undergo conversion from internal combustion engines to fuel cell plants. Additionally, Reference [6] may be used to develop a checklist of the technical areas to be considered in the subsequent development of a body of applicable codes and standards.

Technical and Operational Areas and Issues Related to Fuel Cells – Currently there exist technical and operational areas and issues unique to fuel cells that may not be fully addressed through application of existing marine standards related to traditional machinery plants. These include:

- Personnel training – Current training regimes focus primarily on diesel, gas turbine, and steam turbine prime movers. These regimes will need to be expanded to address fuel cell operations, maintenance and subsequent disposal. Moreover, as use of fuel cells becomes more prevalent, the need for minimum certification and licensing requirements for operators and maintenance personnel must be evaluated.

- Termination of vents and relief valves handling gaseous fuels – As gaseous fuels pose a more significant risk to vessel safety than marine distillate and residual fuels, the termination of vents and relief valves serving gaseous fuel systems must be considered carefully so as to prevent fire hazards and gases from being ingested internally through ventilation openings.

- Handling and storage of gaseous fuels – The storage of high pressure gases and liquified gases at very low temperatures requires close attention to the design and selection of tanks, thermal insulation systems, refrigeration plants, piping systems, and fire protection.

- Disposal of residual sulfur from desulfurizing equipment – The shipboard storage, handling, and transfer of residual sulfur from desulfurizing equipment will require specific attention to materials selection and arrangements to minimize potential hazards to personnel, vessel safety, and the environment. The need for shipboard sulfur storage and transfer facilities may be avoided by the design of the desulfurization system itself. For example, the present Navy design is based on regenerative desulfurization beds and requires no onboard sulfur storage.

- Flame safeguards and fuel gas controls – Similar to oil-fired boilers, fuel cell automation and safety systems must address features necessary to ensure fail-safe operation. Moreover, as most modern vessels are certified for periodically unattended machinery space operation, the level of automation and diagnostics employed for fuels cells must be commensurate with the reduced manning levels employed on most modern commercial vessels.

- Purging and venting requirements – Additional shipboard systems for inerting double-walled, gaseous fuel piping systems and for purging fuel cell stacks will be required. The safe storage and installation of bottled gases or inert gas plants, and related piping systems will need to be addressed.

In the case of land-based standards, some of the above issues are addressed, however, these standards do not generally address the dynamic aspects and complexities inherent in modern ship design as discussed below. These preliminary areas of focus may be further expanded pending review of the failure modes and effect analysis and the system safety analysis being performed for the U.S. Navy fuel cell program, once available.

Rationale and Procedure for Developing a Unified Standard – From the survey results, it is apparent that fuel cell standards specifically tailored towards marine applications do not currently exist. Current land-based fuel cell standards do not address special design considerations for operation in the marine environment, including:

- Ambient air and seawater conditions – Land-based fuel cell power plants are not designed to operate in the extreme ambient conditions of air and cooling water (seawater) temperature and humidity levels which may be experienced in various ship operating environments that marine diesel and gas turbines are designed to operate in.

- Ship motion in a seaway – Land-based systems, and particularly their internal fluid systems, are not designed to allow for inclinations resulting from repetitive ship motions typically experienced in a seaway. Consideration must be given to design and arrangement of equipment mounts, foundations and fluid systems to account for the resulting extreme inclinations due to ship motion and resulting dynamic effects.

- Material corrosion – The corrosive marine environment will have an impact on material selection for fuel cell design components which is not typically a major consideration for land-based plants.

- Operational availability and operability in damaged conditions – Survivability issues for naval machinery plants, and to a growing degree commercial marine plants, necessitates the

consideration of machinery redundancy, and system segregation and isolation for marine fuel cell power plants in order to achieve much higher levels of availability and operability than is required for land-based plants.

In addition, land-based standards do not take into account typical shipbuilding practices, either naval or commercial marine, for system and component design, construction, and installation. These facilitate system integration and enhance producability and cost efficiency. Moreover, the simple application of standards used for more traditional machinery plants does not address certain unique technical and operational aspects of fuel cells that may pose potential hazards to vessels and personnel as discussed previously. While some classification societies are working to develop a comprehensive marine fuel cell standard, such efforts are extremely limited at this time. Consequently, the implementation of this new technology in a safe and reliable manner can best be achieved through development of a unified U.S. and international standard.

To forge the results of this survey into a concise, comprehensive standard for marine fuel cell power plants, it is proposed that the development process include the following steps:

1. Identification of the end product and user – A basic issue which will shape this future standard is whether the end product is to be a universal marine fuel cell standard or a standard tailored for a specific Navy or U.S. Coast Guard plant being developed for a particular application. This determination dictates the tailoring of the standard from the more general and addresses specific plant configurations and operating characteristics unique for the end product. An example of this is the choice or limitations in the fuels to be included in the standard. The fuel specification is a major driver in the consideration of piping, tankage, venting, and process control design standards to be implemented, as well as the inclusion of requirements for fuel desulfurization. Another consideration in addressing the requirements of the end user is whether standards shall be detailed or performance based, and whether standard naval and/or commercial marine shipbuilding practices are to be included in the standard.

2. Scope of the fuel cell standard - Once the end users of the fuel cell standard have been identified, a determination must be made as to the scope of the standard. Tailoring the standard to include the topics of greatest benefit, whether contained in one complete document or separate standards, would include the following:

    - A standard directed to the fuel cell manufacturer (which may have similarity to an equipment or system procurement specification)
    - An installation standard for the shipyard/installer to provide an interface between the fuel cell package and shipboard systems
    - A standard containing minimum documentation and training requirements for operators and maintenance personnel
    - A standard for fuel cell performance evaluation during factory testing and sea trials
    - A regulatory body standard by which to formally certify the fuel cell power plant.

The development of the manufacturer and installer standards outlined above cannot be made without the active participation of industry and the key organizations identified in this study. It is expected that during this phase of the development process, one or several of the fuel cell manufacturers and agencies such as ANSI, ASTM, NFPA, and UL would be included to assist in development of the standard in their areas of expertise and to guide the proposed standard through the agency's approval process. Likewise, with the development of operational, training, and regulatory body requirements, it is expected that the development process would include both the U.S. Coast Guard and a ship classification society, such as ABS. The teaming of fuel cell manufacturer(s) and other third party agencies will benefit the development effort by ensuring that all safety, technical, economic and other considerations will be included, resulting in an impartial, widely accepted standard. This effort is similar to that being used for land-based fuel cell standards development.

3. Standard development – Once determination of the end product/user and scope of the standard has been made, the actual details of the standard may be developed. The land-based and marine fuel cell codes and standards investigated in this survey, along with others that may be needed, will form the basis for the development of a concise, comprehensive set of requirements. It is expected that the partnership of the fuel cell manufacturers, government agencies, and classification societies will continue this phase of development, ultimately leading to the approval of marine-based fuel cell standards by a standards organization, and requirements for shipboard installation by classification societies.

4. International standard adoption – Once the marine fuel cell standard is fully developed, the final stage of standard implementation would be adoption of the standard by the International Standards Organization (ISO) and/or International Maritime Organization (IMO), which will lead to formal acceptance of the standard by the international community.

4.0 CONCLUSIONS AND RECOMMENDATIONS

A survey of U.S. and international regulatory bodies, government agencies, and commercial and military sources for existing and developing codes and standards applicable to land-based and marine-based fuel cell power plants, including BOP subsystems, has been performed. From this survey, it is concluded that existing standards or codes specifically addressing design and installation requirements for marine-based fuel cells do not exist at this time. While significant efforts have been undertaken in recent years to develop land-based standards, the application of these standards for marine fuel cells do not generally address the dynamic aspects and complexities inherent in modern ship design.

The implementation of fuel cell technology aboard ship in a safe and reliable manner can best be achieved through development of a unified U.S. and international standard. The report identifies an approach to facilitate the development of a unified standard in partnership with fuel cell manufacturers, shipbuilders, standards organizations, government regulatory bodies and classification societies, ultimately leading to the adoption of this standard by international

organizations. The results of this survey of land-based fuel cell requirements, and marine codes and standards addressing the fuel cell BOP, and shipboard interfacing systems will support the future development of a unified standard for marine fuel cells.

5.0 REFERENCES

The following references were reviewed as part of the survey for codes and standards applicable to marine fuel cells:

1. "BPVC Code Cases: Boiler and Pressure Vessels," American Society of Mechanical Engineers, 1998.
2. Bolind, Alan M., "An Evaluation of Fuel Cells for Commercial Ship Applications," Technical and Research Report R-55, Society of Naval Architects and Marine Engineers, 2000.
3. Conover, Dave, "Development, Adoption and Implementation of Codes and Standards for Fuel Cells in the U.S.," Fuel Cells Bulletin No. 23, National Evaluation Service, Inc., August 2000.
4. "Fuel Cell Power Plants," ANSI Z21.83, American National Standards Institute, Inc., 1998.
5. "General Specifications for Ships of the United States Navy," Department of the Navy, Naval Sea Systems Command, 1995 Edition.
6. "Integration of Hydrogen Technology into Maritime Applications," Department of Energy Office of Power Technologies, DCH Technology, Inc., May 2000.
7. "National Electrical Code," NFPA 70, National Fire Protection Association, 2000 Edition.
8. "Performance Test Code for Fuel Cell Power Plants," ASME Performance Test Code No. 50, American Society of Mechanical Engineers, not yet published.
9. "Protection of Environment," Title 40, Chapter 1, Part 89, Code of Federal Regulations, National Archives and Records Administration, Revised 1 July 2000.
10. "Recommended Practices for Electric Installations on Shipboard," IEEE Std 45, Institute of Electrical and Electronics Engineers, 1998.
11. "Rules for Building and Classing Steel Vessels; Specific Vessel Types," Part 5, American Bureau of Shipping, October 2000.
12. "Rules for Building and Classing Steel Vessels; Vessel Systems and Machinery," Part 4, American Bureau of Shipping, October 2000.
13. "Safety of Life at Sea," International Maritime Organization, Consolidated Edition, 1997.
14. "Shipping," Title 46, Chapter I, Code of Federal Regulations, National Archives and Records Administration, Revised 1 October, 2000.
15. "Standard for Gaseous Hydrogen Systems at Consumer Sites," NFPA 50a, National Fire Protection Association, 1999 Edition.

16. "Standard for the Installation of Stationary Fuel Cell Power Plants," NFPA 853, National Fire Protection Association, 2000 Edition.

17. "Standard for Liquefied Hydrogen Systems at Consumer Sites," NFPA 50b, National Fire Protection Association, 1996 Edition.

18. "Technical Code on Control of Emission of Nitrogen Oxides from Marine Diesel Engines," Annex VI to MARPOL 73/78, International Maritime Organization, 28 October, 1997

19. Wichert, Robert, "Codes and Standards for Fuel Cells," U.S. Fuel Cell Council, 2000.

20. Fuel Cell Summit Newsletter, Volume 1, Issue 1, Office of Power Technologies, U.S. Department of Energy, Spring 2000.

21. Fuel Cell Summit Newsletter, Volume 1, Issue 2, Office of Power Technologies, U.S. Department of Energy, Summer 2000.

22. Unofficial Transcript of the Fuel Cell Summit Expert Panel Presentation.

23. Fuel Cell Codes and Standards Summit IV, 10-11 May 2000.

24. "Attendee List," Fuel Cell Summit IV, 10-11 May 2000.

25. Jones, Harry, "UL Standards Update [for Fuel Cell Summit IV]," Underwriters Laboratories Inc., 10-11 May 2000.

26. "Codes and Standards for Fuel Cells Status of Development, Adoption and Use in the United States." Prepared for IEC TC 105 on Fuel Cells, 23-24 February 2000.

27. "White Paper in Support of a National Evaluation Protocol for Stationary Fuel Cell Power Plants", 5 June 2000.

28. Brown, D.R., "PEM Fuel Cells for Commercial Buildings," Pacific Northwest National Laboratory, November 1998.

29. "Conceptual Development of a Ship Service Fuel Cell," Seventh Quarterly Review, Fuel Cell Energy, Inc., 10 November 2000.

30. Kunberger, Klaus, "New System for Submarine Propulsion," *Diesel & Gas Turbine Worldwide*, July-August 1999

APPENDIX A: Summary of Codes and Standards for Fuel Cells, Land-Based

Summary of Codes and Standards for Fuel Cells, Land-Based

TITLE	ORGANIZATION	STATUS	Chapter or Section	DESCRIPTION
ANSI Z21.83 Fuel Cell Power Plants	American National Standards Institute, Inc.	First edition, © 1998	Part 1.1 - Scope and References	Part I addresses the outline of the standard and its applicability. This publication provides a basic standard for the construction, safe operation, and acceptable performance of fuel cell power plants operating on gaseous hydrocarbon fuel. It applies to packaged, self-contained, or factory matched packages of integrated systems, operating at temperatures not below –20° F, at output voltage not exceeding 600 VAC, and at power output not exceeding 1000 kW. It references ASTM E380 for use of SI units.
ANSI Z21.83 Fuel Cell Power Plants	American National Standards Institute, Inc.	First edition, © 1998	Part 1.2 - Power Plant Systems	Provides an overall breakdown of power plants addressed in the standard, including fuel processing, air processing, thermal management, water treatment, electrical, automatic control, and power distribution systems and fuel cell stack.
ANSI Z21.83 Fuel Cell Power Plants	American National Standards Institute, Inc.	First edition, © 1998	Part 1.3 - General	Specifies general requirements for parts and substances. Specifies environmental protection by use of enclosures and references UL 795. References ANSI/ASCE 7 for structures; ANSI/UL 723, ANSI/NFPA 255, and ASTM E84 for testing of enclosure materials; ASTM C168 for insulation; and UL 1715 for interior-finish materials. Addresses requirements to prevent ignition of flammable atmospheres within the power plant, with purging and pressurization to meet NFPA 496. Addresses general requirements for water supply, purging, and lifting, shock, and vibration.
ANSI Z21.83 Fuel Cell Power Plants	American National Standards Institute, Inc.	First edition, © 1998	Part 1.4 - Materials	Specifies requirements for use of ferrous materials, rubber, plastics, and copper alloys.

TITLE	ORGANIZATION	STATUS	Chapter or Section	DESCRIPTION
ANSI Z21.83 Fuel Cell Power Plants	American National Standards Institute, Inc.	First edition, © 1998	Part 1.5 - General Construction and Assembly	Specifies general requirements for construction of parts for durability, safety, and ease of maintenance.
ANSI Z21.83 Fuel Cell Power Plants	American National Standards Institute, Inc.	First edition, © 1998	Part 1.6 - Enclosures and Associated Construction	Specifies requirements for enclosure construction, insulation materials, and access panels covers and doors.
ANSI Z21.83 Fuel Cell Power Plants	American National Standards Institute, Inc.	First edition, © 1998	Part 1.7 - Heaters and Vessels	References ANSI/UL 834 for electric boilers, UL 795 and ANSI Z21.13 for gas-fired boilers, ANSI/UL 499 and ANSI/UL 1025 and 823 for electric heaters, Z83.8 - CGA 2.6 for gas heaters, ANSI/ASME 1995 for pressurized vessels, and specifies requirements for unpressurized vessels, and double-wall cross connections.
ANSI Z21.83 Fuel Cell Power Plants	American National Standards Institute, Inc.	First edition, © 1998	Part 1.8 - Piping Systems	References UL 795 for industrial gas heating equipment, and ASME B31.3 for chemical plant and petroleum refining piping. Specifies steel pipe in accordance with ANSI/ASME B31.10M and pipe threading in accordance with ANSI B1.20.1. General pipe requirements are addressed. Requires steam vapor (above 15 psi) or liquid (above 160 psi and/or 250°F) piping to be in accordance with ANSI/ASME B31.1. Addresses requirements for fuel gas piping, fittings, and flexible connectors (in accordance with ANSI Z21.24 - CGA-6.10 or ANSI/UL 536).
ANSI Z21.83 Fuel Cell Power Plants	American National Standards Institute, Inc.	First edition, © 1998	Part 1.9 - Drain, Venting, and Ventilation Exhaust Systems	Specifies requirements for arrangement of the condensate system. Requires ventilation and venting exhaust system to carry combustion products to plant exterior.

TITLE	ORGANIZATION	STATUS	Chapter or Section	DESCRIPTION
ANSI Z21.83 Fuel Cell Power Plants	American National Standards Institute, Inc.	First edition, © 1998	Part 1.10 - Automatic Ignition Systems and Gas-Air Control	Specifies requirements for ignition systems, burners, and automatic ignition systems in accordance with ANSI Z21.20 or ANSI/UL 372.
ANSI Z21.83 Fuel Cell Power Plants	American National Standards Institute, Inc.	First edition, © 1998	Part 1.11 - Flame Safeguards	Specifies requirements for reformer start and main burners, automatic ignition systems, controls, and valves. References ANSI/NFPA 86C for burner controls.
ANSI Z21.83 Fuel Cell Power Plants	American National Standards Institute, Inc.	First edition, © 1998	Part 1.12 - Fuel Gas Controls and Equipment	Specifies requirements for manual valves (ANSI Z21.15 - CGA 9.1 and UL 842), automatic operating and safety valves (ANSI Z21.15 - CGA 6.5, ANSI/UL 429, or FM7400), pressure regulators (ANSI Z21.18 - CGA 6.3, ANSI/UL 252, or ANSI/UL 144), pilot filters (ANSI Z21.35 - CGA 6.8), vents, compressor design and installation (ANSI/NFPA 52), and motors.
ANSI Z21.83 Fuel Cell Power Plants	American National Standards Institute, Inc.	First edition, © 1998	Part 1.13 - Air/Fluid-Handling Equipment	References ANSI/UL 429 and ANSI/UL 1002 for electrically-operated control and safety valves; UL 842 for manually-operated shutoff valves; UL 125 or ANSI/AWWA C506 for check valves; ANSI/UL 144 or ANSI/UL 252 for pressure regulating valves; ANSI/UL 353, ANSI/UL 632, ANSI/UL 873, UL 404, UL 1092, and/or ANSI/ASME B40.1 for process control equipment and monitoring devices; ANSI/AWWA B100 for fluid filtering materials; ANSI/UL 900 for air filters; and ANSI/UL 555 or ANSI/NFPA 80 for damper assemblies fitted in enclosures. Specifies automatic actuating damper assemblies in accordance with ANSI/UL 33, ANSI/UL 521, or ANSI/NFPA 71.
ANSI Z21.83 Fuel Cell Power Plants American National Standards Institute, Inc.	American National Standards Institute, Inc.	First edition, © 1998	Part 1.14 - Air/Fluid-Moving Equipment	Electric motors shall be designed for continuous duty with overload protection in accordance with ANSI/NFPA 70 and UL 795. May meet compliance via ANSI/UL 519 for impedance-protected motors, ANSI/UL 547 or ANSI/UL 1020 for fractional-horsepower motors, provision of motor starter with overload protection, or submittal of manufacturer test evidence of compliance. Electric motors in hazardous areas shall meet

TITLE	ORGANIZATION	STATUS	Chapter or Section	DESCRIPTION
			Part 1.14 - Air/Fluid-Moving Equipment (cont'd)	ANSI/UL 674. Electric pumps shall comply with ANSI/UL 778. Commutator motors and power ventilators shall comply with ANSI/UL 1004 and ANSI/UL 705, respectively. Addresses applicability and maintenance requirements for fans, turbochargers, blowers, pulleys, belt-drives, and bearings.
ANSI Z21.83 Fuel Cell Power Plants	American National Standards Institute, Inc.	First edition, © 1998	Part 1.15 - Electrical Equipment and Wiring	References Exhibit A for requirements.
ANSI Z21.83 Fuel Cell Power Plants	American National Standards Institute, Inc.	First edition, © 1998	Part 1.16 - Protection of Service Personnel	Specifies requirements for locating, guarding, and enclosing exposed high-voltage or high-tension electric circuits, devices, and components, including maintenance access requirements. References UL 795 and ANSI/UL 372.
ANSI Z21.83 Fuel Cell Power Plants	American National Standards Institute, Inc.	First edition, © 1998	Part 1.17 - Safety Circuit Analysis	Specifies design and installation requirements for safety-control circuit electrical equipment. Requires FMEA to identify system failure modes.
ANSI Z21.83 Fuel Cell Power Plants	American National Standards Institute, Inc.	First edition, © 1998	Part 1.18 - Instructions	Specifies requirements for the fuel cell plant installation and maintenance manuals and land-based site layout and design guidelines document.
ANSI Z21.83 Fuel Cell Power Plants	American National Standards Institute, Inc.	First edition, © 1998	Part 1.19 - Marking	Specifies plant physical and diagrammatic marking requirements. Electrical diagrams shall conform to ANSI Y14.15; ANSI/IEEE 315 for symbols, and ANSI/IEEE C37.2 for protective functions of automatic switchgear.
ANSI Z21.83 Fuel Cell Power Plants	American National Standards Institute, Inc.	First edition, © 1998	Part 2.1 - General Specifications	Part II specifies test requirements to measure plant performance. This standard is applicable to power plants operating on natural gas or LPG. Requires testing with fuel selected by the manufacturer. Addresses requirements for thermocouples and temperature measuring devices in accordance with ANSI/ASME PTC 19.3. Addresses measurement of

TITLE	ORGANIZATION	STATUS	Chapter or Section	DESCRIPTION
			Part 2.1 - General Specifications (cont'd)	noise against limits using methods in ANSI S1.4, ANSI S1.10, or ANSI S1.23.
ANSI Z21.83 Fuel Cell Power Plants	American National Standards Institute, Inc.	First edition, © 1998	Part 2.2 - Test Gases and Pressures	Identifies characteristics of fuel gases to be used during testing and specifies test pressures based on the plant design operating pressure.
ANSI Z21.83 Fuel Cell Power Plants	American National Standards Institute, Inc.	First edition, © 1998	Part 2.3 - Basic Test Arrangements	Specifies required plant configuration for testing.
ANSI Z21.83 Fuel Cell Power Plants	American National Standards Institute, Inc.	First edition, © 1998	Part 2.4 - Ultimate Strength	Specifies pressure tests of all parts that convey a liquid or flammable gas to test pressures based on the maximum operating pressure of the plant or component.
ANSI Z21.83 Fuel Cell Power Plants	American National Standards Institute, Inc.	First edition, © 1998	Part 2.5 - Allowable Leakage	Specifies test of all parts that convey flammable gas when subjected to 1-1/2 times their operating pressure. Specifies gas leakage limits.
ANSI Z21.83 Fuel Cell Power Plants	American National Standards Institute, Inc.	First edition, © 1998	Part 2.6 - Protection Parameters	Specifies performance of simulated tests to verify plant automatic shutdown and interrupt/disconnect features.
ANSI Z21.83 Fuel Cell Power Plants	American National Standards Institute, Inc.	First edition, © 1998	Part 2.7 - Emission of Effluents	Specifies test of the power plant for leakage of CO. Specifies CO emission limits.
ANSI Z21.83 Fuel Cell Power Plants	American National Standards Institute, Inc.	First edition, © 1998	Part 2.8 - Burner Operating Characteristics	Specifies tests to verify proper start burner (of the reformer section) operation under the extreme operating pressure and temperature limits given.

TITLE	ORGANIZATION	STATUS	Chapter or Section	DESCRIPTION
ANSI Z21.83 Fuel Cell Power Plants	American National Standards Institute, Inc.	First edition, © 1998	Part 2.9 - Automatic Ignition Systems	Specifies tests to verify proper start burner (of the reformer section) operation and system safety features when subjected to voltage variation.
ANSI Z21.83 Fuel Cell Power Plants	American National Standards Institute, Inc.	First edition, © 1998	Part 2.10 - Exhaust Gas Temperature	Specifies test to verify venting system (where fitted) material design temperatures are not exceeded.
ANSI Z21.83 Fuel Cell Power Plants	American National Standards Institute, Inc.	First edition, © 1998	Part 2.11 - Surface and Component Temperatures	Specifies test to verify maximum temperature of surfaces which may be in contact with personnel do not exceed the limits given.
ANSI Z21.83 Fuel Cell Power Plants	American National Standards Institute, Inc.	First edition, © 1998	Part 2.12 - Electrical Tests	Specifies tests to verify system continuity and grounding features.
ANSI Z21.83 Fuel Cell Power Plants	American National Standards Institute, Inc.	First edition, © 1998	Part 2.13 - Rain and Wind Tests	Specifies test of outdoor power plant operation under various simulated rain and wind conditions.
ANSI Z21.83 Fuel Cell Power Plants	American National Standards Institute, Inc.	First edition, © 1998	Part 2.14 - Adhesion and Legibility of Marking Materials	Specifies test of adhesion and legibility of marking materials under various simulated environmental conditions.
ANSI Z21.83 Fuel Cell Power Plants	American National Standards Institute, Inc.	First edition, © 1998	Exhibit A - Electrical Equipment and Wiring	General construction and assembly of electrical equipment and wiring are discussed. Requirements for cable protection, enclosures and enclosure types, wireways, cable terminations, cable splicing, cable and junction box grounding, suitable switches, safety control circuits and electrical equipment in hazardous locations are specified. The construction of a power plant shall be such that all electrical power for operating and maintaining its equipment can be obtained as permitted by the National Electrical Code, ANSI/NFPA 70 under section 230-2 of

TITLE	ORGANIZATION	STATUS	Chapter or Section	DESCRIPTION
			Exhibit A - Electrical Equipment and Wiring (cont'd)	Article 230, Section 705-10 of Article 705 and Part A of Article 685. Certain electrical components may be judged in accordance with the following: Power Supplies, ANSI/UL 1012; Specialty Transformers, ANSI/UL 506 or Specialty Transformers, NEMA ST1; Enclosed and Dead Front Switches, ANSI/UL 98, Automatic Transfer Switches, ANSI/UL 1008, and Special Use Switches, ANSI/UL 1054; Cabinets and Boxes, ANSI/UL 50, Panelboards, ANSI/UL 67, Dead Front Switchboards ANSI/UL 891, and Termination Boxes, UL 1773; Printed Wiring Boards, ANSI/UL 796; Industrial Control Equipment, ANSI/UL 508.
ANSI Z21.83 Fuel Cell Power Plants	American National Standards Institute, Inc.	First edition, © 1998	Part III - Quality Assurance Plan	Part III outlines a quality assurance plan which guarantees uniform plant testing and verification.
ANSI Z21.83 Fuel Cell Power Plants	American National Standards Institute, Inc.	First edition, © 1998	Part IV - Definitions	Provides a list of definitions and references ANSI Z223.1, ANSI/NFPA 70, ANSI/NFPA 86C, and UL 795.
ASME PTC 50 Performance Test Code for Fuel Cell Power Systems	American Society of Mechanical Engineers	Work on draft continues; 2002 is the target date for completion and publication.		An outline of the standard is as follows: Object, scope and measurement uncertainty Definitions and descriptions of terms Guiding principles Instruments and methods of measurement Calculations and results Report of results Uncertainty PTC 50 shall cover PAFCs, PEMFCs, MCFCs and SOFCs for all applications. Test procedures, methods and definitions are provided to address the performance characterization of fuel cell power systems (overall) with respect to inputs and outputs under steady-state conditions.

TITLE	ORGANIZATION	STATUS	Chapter or Section	DESCRIPTION
	National Hydrogen Association	The National Hydrogen Association, in cooperation with the U.S. Department of Energy Hydrogen Program, has seven (7) working groups, in various stages of activity. They are: WG1: Connectors WG2: a. Containers; b. Hybrids WG3: Refueling Stations WG4: C&S for the use of electrolysers and fuel cells at customer sites, including homes. WG5; C&S for safe self-service refueling of vehicles with H2. WG6: Certification program for hydrogen vehicle fuel systems. (SAR Coordination) WG7: C&S for maritime unique application of		A draft standard has been developed by WG1 for gaseous hydrogen connectors. It was accepted by ISO/TC-197 and is undergoing international development. Related to WG2, the initial NHA draft standard for tanks included only materials used in CNG that were compatible with hydrogen. The international standard does not exclude composites and other materials, as long as they meet a stated performance standard. The NHA encourages members to join the ISO/TC-197 WG and continue to advance the item internationally. WG3 (ISO/TC-197 WG5) is looking at the technical questions remaining, and determining a process or approach for resolving them, and for coordination with the other standards bodies. WG4 is charged with developing a standard for installation, safety and use of electrolyser hydrogen generators in end use applications, including residential, commercial, and industrial. WG5 is reviewing existing draft standards for refueling stations and connectors to identify any deficiencies for public use. WG6 is assisting the SAE in their efforts to specify design criteria (vehicle grounding, venting of fuel lines, eliminating ignition sources, other safety precautions, etc.) for refueling with gaseous hydrogen or liquid hydrogen. WG7 is identifying maritime-unique applications of hydrogen.

TITLE	ORGANIZATION	STATUS	Chapter or Section	DESCRIPTION
	National Hydrogen Association (cont'd)	hydrogen (identify unique applications).		
IEC TC 105 Fuel Cell Technologies	International Electrotechnical Committee	Next committee meeting to be held in summer 2001.		New Work Item proposals from the committee include the following: Definitions and Terminology (US), Stationary Fuel Cell Systems-Safety (US), Stationary Fuel Cell Systems-Installation (US), Stationary Fuel Cell Systems-Performance (JPN), and Fuel Cell Modules (GER)
IEEE P1547 Distributed Resources Interconnected with Electrical Power Systems	Institute of Electrical and Electronic Engineers	Draft 6 of the standard to be presented/submitted to the DOE in January 2001.		Not yet reviewed.
ISO/WI 17268 Gaseous Hydrogen – Land Vehicle Fueling Connectors	International Standardization Organization	First committee draft available September 2001.		Not yet reviewed.
ISO/CD 13985 Liquid Hydrogen – Land Vehicle Fuel Tanks	International Standardization Organization	Final Draft International Standard available December 2000.		Not yet reviewed.

TITLE	ORGANIZATION	STATUS	Chapter or Section	DESCRIPTION
ISO/WD 13986 Tank Containers for Multimodal Transportation of Liquid Hydrogen	International Standardization Organization	Unknown.		Not yet reviewed.
ISO/WD 15594 Airport Hydrogen Fueling Facility	International Standardization Organization	Unknown.		Not yet reviewed.
ISO/WD 15866 Gaseous Hydrogen Blends and Hydrogen Fuel – Service Stations	International Standardization Organization	First committee draft available December 2001.		Not yet reviewed.
ISO/WD 15869 Gaseous Hydrogen and Hydrogen Blends – Land Vehicle Fuel Tanks	International Standardization Organization	Draft International Standard available November 2000.		Not yet reviewed.
ISO/WD 15916 Basic Requirements for the Safety of Hydrogen Systems	International Standardization Organization	Draft Publicly Available Specification available October 2000.		Not yet reviewed.

TITLE	ORGANIZATION	STATUS	Chapter or Section	DESCRIPTION
ISO 8178 Reciprocating Internal Combustion Engine – Exhaust Emission Requirements	International Standardization Organization	1996 edition	Part 1 – Test bed measurement of gaseous and particulate exhaust emissions.	Specifies general requirements for test bed measurement of gaseous and particulate exhaust emission.
ISO 8178 Reciprocating Internal Combustion Engine – Exhaust Emission Requirements	International Standardization Organization	1996 edition	Part 2 – Measurement of gaseous and particulate exhaust emissions at site	Specifies requirements for measurement of gaseous and particulate emissions at site.
ISO 8178 Reciprocating Internal Combustion Engine – Exhaust Emission Requirements	International Standardization Organization	1994 edition	Part 3 – Definitions and methods of measurement of exhaust gas smoke under steady-state conditions.	Provides definitions and methods of measurement of exhaust gas smoke under steady-state conditions.
ISO 8178 Reciprocating Internal Combustion Engine – Exhaust Emission Requirements	International Standardization Organization	1996 edition	Part 4 – Test cycles for different engine applications	Specifies the test cycles for different engine applications.

TITLE	ORGANIZATION	STATUS	Chapter or Section	DESCRIPTION
ISO 8178 Reciprocating Internal Combustion Engine – Exhaust Emission Requirements	International Standardization Organization	1997 edition	Part 5 – Test fuels	Specifies the requirements for the test fuels to be used.
ISO 8178 Reciprocating Internal Combustion Engine – Exhaust Emission Requirements	International Standardization Organization	2000 edition	Part 6 – Report of measuring results and test	Specifies requirements for the reporting of measuring results and tests.
ISO 8178 Reciprocating Internal Combustion Engine – Exhaust Emission Requirements	International Standardization Organization	1996 edition	Part 7 – Engine family determination	Specifies requirements for the determination of the engine family.
ISO 8178 Reciprocating Internal Combustion Engine – Exhaust Emission Requirements	International Standardization Organization	1996 edition	Part 8 – Engine group determination	Specifies requirements for the determination of the engine group.

TITLE	ORGANIZATION	STATUS	Chapter or Section	DESCRIPTION
ISO 8178 Reciprocating Internal Combustion Engine – Exhaust Emission Requirements	International Standardization Organization	2000 edition	Part 9 – Test cycles and test procedures for test bed measurement of exhaust gas smoke emissions from compression ignition engines operating under transient conditions	Provides requirements for test cycles and test procedures for test bed measurement of exhaust gas smoke emissions from compression ignition engines operating under transient conditions.
MIL-STD-882D Standard Practice for System Safety	Department of Defense	2000 edition	N/A	This standard provides uniform requirements for developing and implementing a system safety program of sufficient comprehensiveness to identify the hazards of a system and to impose design requirements and management controls to prevent mishaps by eliminating hazards or reducing the associated risk to a level acceptable to the managing activity (MA). The term "managing activity" usually refers to the Government procuring activity, but may include prime or associate contractors or subcontractors who wish to impose system safety tasks on their suppliers.
NFPA 50A Standard for Gaseous Hydrogen Systems at Consumer Sites	National Fire Protection Assoc.	1999 edition	Chapter 1 - General Information	Addresses applicability of standard and provides definitions (references NFPA 220 for limit-combustible material, NFPA 220 and ASTM E 136 for noncombustible material).

TITLE	ORGANIZATION	STATUS	Chapter or Section	DESCRIPTION
NFPA 50A Standard for Gaseous Hydrogen Systems at Consumer Sites	National Fire Protection Assoc.	1999 edition	Chapter 2 - Design of Gaseous Hydrogen Systems	Specifies design requirements for hydrogen containers (refers to ASME *Boiler and Pressure Vessel Code* or 49 CFR 171-190 for design, ANSI/CGA C-4 for marking); pressure relief valves (ASME *Code* or DOT *Specifications and Regulations*); piping, tubing and fittings (refers to ASME B31.3 for materials and thickness); and equipment assembly, which includes other piping components, fittings, and accessories.
NFPA 50A Standard for Gaseous Hydrogen Systems at Consumer Sites	National Fire Protection Assoc.	1999 edition	Chapter 3 - Location of Gaseous Hydrogen Systems	Specifies general requirements for locating systems to avoid hazards. Refers to tables giving minimum distances to various exposures based on the volume of hydrogen stored.
NFPA 50A Standard for Gaseous Hydrogen Systems at Consumer Sites	National Fire Protection Assoc.	1999 edition	Chapter 4 - Design Considerations at Specific Locations	Addresses design considerations for outdoor locations; separate buildings, and special rooms (electrical equipment shall comply with NFPA 70 in all cases).
NFPA 50A Standard for Gaseous Hydrogen Systems at Consumer Sites	National Fire Protection Assoc.	1999 edition	Chapter 5 - Operation and Maintenance	Specifies operator instructions and maintenance requirements.

TITLE	ORGANIZATION	STATUS	Chapter or Section	DESCRIPTION
NFPA 50A Standard for Gaseous Hydrogen Systems at Consumer Sites	National Fire Protection Assoc.	1999 edition	Chapter 6 - Fire Protection	Addresses personnel precautions.
NFPA 50B Standard for Liquified Hydrogen Systems at Consumer Sites	National Fire Protection Assoc.	1999 edition	Chapter 1 - General Information	Addresses applicability of standard and provides definitions (references NFPA 220 for limit-combustible material, NFPA 220 and ASTM E 136 for noncombustible material).
NFPA 50B Standard for Liquified Hydrogen Systems at Consumer Sites	National Fire Protection Assoc.	1999 edition	Chapter 2 - Design of Liquified Hydrogen Systems	Specifies design requirements for hydrogen containers (refers to ASME *Boiler and Pressure Vessel Code* and 49 CFR 171-190 for portable containers); pressure relief devices (CGA S-1.3 for stationary containers, CGA S-1.1 and CGA S-1.2 for portable containers); piping, tubing, and fittings (refers to ASME B31.3 for materials and thickness); and equipment assembly, which includes other piping components, fittings, and accessories; liquified hydrogen vaporizers, and electrical systems (refers to NFPA 70). Also specifies requirements for testing, inspections, and bonding and grounding.
NFPA 50B Standard for Liquified Hydrogen Systems at Consumer Sites	National Fire Protection Assoc.	1999 edition	Chapter 3 - Location of Liquified Hydrogen Systems	Provides general requirements for locating systems to avoid hazards. Refers to tables giving minimum distances to various exposures based on the volume of hydrogen stored.

TITLE	ORGANIZATION	STATUS	Chapter or Section	DESCRIPTION
NFPA 50B Standard for Liquified Hydrogen Systems at Consumer Sites	National Fire Protection Assoc.	1999 edition	Chapter 4 - Design Considerations at Specific Locations	Addresses design considerations for outdoor locations, separate buildings, and special rooms, including ventilation, heating, electrical systems requirements.
NFPA 50B Standard for Liquified Hydrogen Systems at Consumer Sites	National Fire Protection Assoc.	1999 edition	Chapter 5 - Operation	Specifies requirements for operating instructions, personnel qualifications, and equipment grounding.
NFPA 50B Standard for Liquified Hydrogen Systems at Consumer Sites	National Fire Protection Assoc.	1999 edition	Chapter 6 - Maintenance	Specifies general maintenance and inspection requirements.
NFPA 50B Standard for Liquified Hydrogen Systems at Consumer Sites	National Fire Protection Assoc.	1999 edition	Chapter 7 - Fire Protection	Addresses personnel precautions.
NFPA 70 National Electrical Code Article 240-1 Overcurrent Protection	National Fire Protection Assoc.	Edition © 1998-1999	Parts A through I	Parts A through G specify general requirements for overcurrent protection and overcurrent protective devices not more than 600 volts, nominal. Part H addresses overcurrent protection for those portions of supervised industrial installations at voltages of not more than 600 volts, nominal. Part I addresses overcurrent protection over 600 volts, nominal.

TITLE	ORGANIZATION	STATUS	Chapter or Section	DESCRIPTION
NFPA 70 National Electrical Code Article 240-30 Enclosures	National Fire Protection Assoc.	Edition © 1998-1999	N/A	Overcurrent devices shall be protected from physical damage by one of the following: 1) Installation in enclosures, cabinets, cutout boxes, or equipment assemblies 2) Mounting on open-type switchboards, panel boards, or control boards that are in rooms or enclosures free from dampness and easily ignitable material, and are accessible only to qualified personnel The operating handle of a circuit breaker shall be permitted to be accessible without opening a door or cover Enclosures for overcurrent devices in damp or wet locations shall comply with Section 373-2(a) Enclosures for overcurrent devices shall be mounted in a vertical position. Circuit breaker enclosures shall be permitted to be installed horizontally where the circuit breaker is installed in accordance with Section 240-81. Listed busway plug-in units shall be permitted to be mounted in orientations corresponding to the busway mounting position.
NFPA 70 National Electrical Code Article 240-80 Circuit Breakers	National Fire Protection Assoc.	Edition © 1998-1999	N/A	Circuit breakers shall be trip free and capable of being closed and opened by manual operation. Their normal method of operation by other than manual means, such as electrical or pneumatic, shall be permitted if means for manual operation is also provided. Covers circuit breaker indications and markings. Circuit breakers are also to be nontamperable. Circuit breaker applications are also presented as well as series ratings for circuit breakers.

TITLE	ORGANIZATION	STATUS	Chapter or Section	DESCRIPTION
NFPA 70 National Electrical Code Article 310 Conductors for General Wiring	National Fire Protection Assoc.	Edition © 1998-1999	N/A	This article covers general requirements for conductors and their type designations, insulations, markings, mechanical strengths, ampacity rating, and uses. These requirements do not apply to conductors that form an integral part of equipment, such as motors, motor controllers, and similar equipment, or to conductors specifically provided for elsewhere in this *Code*.
NFPA 70 National Electrical Code Article 445 Generators	National Fire Protection Assoc.	Edition © 1998-1999	N/A	Generators and their associated wiring and equipment shall also comply with the applicable provisions of Articles 695, 700, 701, 702, and 705. Generator locations, markings, overcurrent protection, ampacity of conductors, guards for attendants, bushings, terminal housings, and disconnecting means are also covered.
NFPA 70 National Electrical Code Article 450 Transformers	National Fire Protection Assoc.	Edition © 1998-1999	N/A	This article addresses the installation of all transformers. Overcurrent protection, autotransformers, grounding, fault settings, secondary ties, parallel operation, ventilation (if needed), marking, accessibility, and specific provisions applicable for different types of transformers are addressed in this article.
NFPA 70 National Electrical Code Article 691/692 Fuel Cell Systems	National Fire Protection Assoc.	Not yet published. To be voted on by NFPA members in May 2001.		Not yet reviewed.

TITLE	ORGANIZATION	STATUS	Chapter or Section	DESCRIPTION
NFPA 853 Standard for the Installation of Stationary Fuel Cell Power Plants	National Fire Protection Assoc.	First edition, © 2000	Chapter 1 - Introduction	Provides scope and purpose of the standard, allowance for use of alternative materials and methods, and a list of definitions used. This standard applies to the design, construction, and installation of stationary fuel cell power plants with a gross electrical generation that exceeds 50 kW; including (1) a singular prepackaged, self-contained power plant unit; (2) any combination of prepackaged, self-contained power plant units; (3) power plant units comprised of two or more factory matched modular components intended to be assembled in the field; and (4) engineered and field-constructed power plants that employ fuel cells. This standard does not apply to fuel cell power plants that are used on any mobile structure or vehicle, except to the degree that the structure or vehicle is made stationary.
NFPA 853 Standard for the Installation of Stationary Fuel Cell Power Plants	National Fire Protection Assoc.	First edition, © 2000	Chapter 2 - General Equipment Configuration	Defines prepackaged, pre-engineered, and engineered and field-constructed fuel cell power plant configurations. References ANSI Z21.83.
NFPA 853 Standard for the Installation of Stationary Fuel Cell Power Plants	National Fire Protection Assoc.	First edition, © 2000	Chapter 3 - Siting and Interconnections	Specifies requirements for general siting, including foundations, security, and general fire precautions (references NFPA 70 and NFPA 496 define hazardous atmospheres, NFPA 241 for fire protection during construction), and specific outdoor (references NFPA 70 for area classification around exhaust outlets), indoor (references NFPA 251 for space fire protection, NFPA 80 for fire doors, NFPA 90A for fire dampers, and NFPA 101 for egress requirements) and rooftop locations. Specifies requirements for electrical (NFPA 70) and fuel gas interconnections with other building systems.

TITLE	ORGANIZATION	STATUS	Chapter or Section	DESCRIPTION
NFPA 853 Standard for the Installation of Stationary Fuel Cell Power Plants	National Fire Protection Assoc.	First edition, © 2000	Chapter 4 - Fuel Supplies and Storage Arrangements	Addresses requirements for the installation and location of fuel cell power plant fuel supplies and associated piping and components. Natural gas piping, valves, and fittings shall meet NFPA 54. Compressed natural gas (CNG) piping, valves, and fittings shall meet NFPA 52. Liquified petroleum gas (LPG) systems and storage shall comply with NFPA 58. Gaseous hydrogen storage shall meet NFPA 50A; liquid hydrogen storage shall meet NFPA 50B; hydrogen piping, valves, and fittings shall conform to ASME/ANSI B31.3 and specified requirements for shutoff valves. Biogas storage tanks and associated piping, valves, and regulators shall meet NFPA 54. Liquid fuel (diesel, JP-4, JP-5 ethanol, naphtha methanol) piping and storage systems shall meet NFPA 30.
NFPA 853 Standard for the Installation of Stationary Fuel Cell Power Plants	National Fire Protection Assoc.	First edition, © 2000	Chapter 5 - Ventilation and Exhaust	Requires a source of ventilation, exhaust, and makeup air for fuel cell power plants not installed outdoors and not provided with a sealed, direct ventilation and exhaust system. Gives requirements for general system design, natural or mechanical ventilation, exhaust system sizing, and process purging and venting.
NFPA 853 Standard for the Installation of Stationary Fuel Cell Power Plants	National Fire Protection Assoc.	First edition, © 2000	Chapter 6 - Fire Protection	

TITLE	ORGANIZATION	STATUS	Chapter or Section	DESCRIPTION
NFPA 853 Standard for the Installation of Stationary Fuel Cell Power Plants	National Fire Protection Assoc.	First edition, © 2000	Appendix A - Explanatory Material	References NFPA 255 and NFPA 259 regarding limited combustibles and ANSI Z21.83 for fuel cell testing.
UL 1741 Inverters, Converters, and Controllers for Use in Independent Power Systems	Underwriters Laboratories	Internet edition, © 2000		Specifies requirements for inverters that convert DC power from photovoltaic systems to AC power; AC modules that supply AC power directly from photovoltaic arrays; and charge controllers that receive power from photovoltaic arrays and control the charging process of storage batteries. Also addresses inverters that include charge control capabilities to convert AC power to DC power for charging batteries associated with photovoltaic systems. These inverters, AC modules, and charge controllers are rated up to 600 volts and are intended to be installed in accordance with the National Electrical Code, NFPA 70. The inverters include stand-alone units and utility interactive inverters for use in parallel with an electric supply system or an electric utility to supply common loads. The AC modules are intended to be installed on a dedicated branch circuit for use in parallel with an electric supply system or an electric utility to supply common loads (utility-interactive). The charge controllers include controllers to be incorporated within an inverter and controllers provided as separate units.
UL 1998 Software in Programmable Components	Underwriters Laboratories	Internet edition, © 2000		These requirements apply to non-networked embedded microprocessor software whose failure is capable of resulting in a risk of fire, electric shock, or injury to persons. This standard is to be applied when specifically referenced by other standards or product safety requirements. These requirements address the risks unique to product hardware controlled by software in programmable components.

TITLE	ORGANIZATION	STATUS	Chapter or Section	DESCRIPTION
UL 1998 Software in Programmable Components (cont'd)				These requirements are intended to supplement applicable product or component standards and requirements, and are not intended to serve as the sole basis for investigating the risk of fire, electric shock, or injury to persons. These requirements are intended to address risks that occur in the software or in the process used to develop and maintain the software, such as the following: Requirements conversion faults that cause differences between the specification for the programmable component and the software design; Design faults such as incorrect software algorithms or interfaces; Coding faults, including syntax, incorrect signs, endless loops, and other coding faults; Timing faults that cause program execution to occur prematurely or late; Microelectronic memory faults, such as memory failure, not enough memory, or memory overlap; Induced faults caused by microelectronic hardware failure; Latent, user, input/output, range, and other faults that are only detectable when a given state occurs; and Failure of the programmable component to perform any function at all.
UL 795 Commercial-Industrial Gas Heating Equipment	Underwriters Laboratories	Internet edition, © 2000		These requirements apply to factory-built gas appliances having inputs of more than 400,000 Btu per hour, per individual combustion chamber which require flame failure and other precautions and which are intended primarily for commercial and industrial installation. The appliances covered by these requirements are gas burners, comfort heating furnaces, heaters and gas-fired boiler assemblies except watertube boilers having outputs of 10,000 pounds of steam per hour or more. Gas-heating equipment covered by these requirements may be operated without a competent attendant being constantly on duty at the burners

TITLE	ORGANIZATION	STATUS	Chapter or Section	DESCRIPTION
UL 795 Commercial-Industrial Gas Heating Equipment (cont'd)				while the burners are in operation. These requirements do not apply to process equipment. Other requirements are available for central-heating gas appliances, domestic conversion burners, floor furnaces, room heaters, unit heaters, and water heaters as defined by the Standard for Installation of Gas Appliances and Gas Piping, NFPA 54-1996.
UL 991 Tests for Safety-Related Controls Employing Solid-State Devices	Underwriters Laboratories	Internet edition, © 2000		These requirements apply to controls that employ solid-state devices and are intended for specified safety-related protective functions. These requirements address the potential risks unique to the electronic nature of a control. Equipment or components employing an electronic feature shall also comply with the basic construction and performance requirements contained in the applicable end-product or component standard. These requirements are intended to supplement applicable end-product or component standards and are not intended to serve as the sole basis for investigating the risks of fire, electric shock, or injury to persons associated with a control. These requirements do not cover controls covered by end-product standards in which an electronic control investigation is specified. The standard contains standardized test methods for investigating the performance of an electronic control when subjected to particular environmental stresses. The suitability of each test to a given control shall be determined by the end-product standard(s). Determination shall include an assessment of: Whether the control will be exposed to a particular environmental stress in its application, and Whether the response of the control to a particular environmental stress is

TITLE	ORGANIZATION	STATUS	Chapter or Section	DESCRIPTION
UL 991 Tests for Safety-Related Controls Employing Solid-State Devices (cont'd)				relevant to its intended safety-related protective function in its application. End-product standard requirements may supersede recommended severity levels for those tests where optional severity levels are provided.

[This page intentionally left blank.]

APPENDIX B: Summary of Codes and Standards Potentially Applicable to Fuel Cells, Marine-Based

Summary of Codes and Standards Potentially Applicable to Fuel Cells, Marine-Based

ITEM NO.	SWBS NO.	SWBS TITLE AND TOPIC	STANDARD	AMPLIFICATION OF STANDARD	REMARKS
1	020	Cutter Requirements – Pollution Prevention and Control	USCG Cutter Certification Plan, Sort #1-2, December 2000	Certificates of compliance required in lieu of CCP certification procedure.	See also SWBS No. 233.
2	070	General Requirements for Design and Construction - Deck Machinery and Equipment Weather Air Operating Temperature Range	USCG Cutter Certification Plan, Sort #15, December 2000	-40 ° F to 125 ° F inclusive with 0% to 100% relative humidity, inclusive. Special means shall be used, such as insulation, low temperature operating fluids, auxiliary heating systems and so forth, to ensure machinery operates satisfactorily with the extreme cold temperatures herein. It is intended that all equipment can operate satisfactorily unless the system is not required to operate at these temperatures.	
3	070	General Requirements for Design and Construction - Design Seawater and Freshwater Service Temperature Range	USCG Cutter Certification Plan, Sort #14, December 2000	28° F to 90° F inclusive for seawater 32° F to 90° F inclusive for freshwater	
4	070	General Requirements for Design and Construction – Machinery, Angles of Inclination	CFR, Title 46, Sec. 58.01-40, October 2000	Propulsion machinery and all auxiliary machinery essential to the propulsion and safety of the vessel must be designed to operate when the vessel is upright, when the vessel is inclined under static conditions at any angle of list up to and including 15 degrees, and when the vessel is inclined under dynamic conditions (rolling) at any angle of list up to and including 22.5 degrees and, simultaneously, at any angle of trim (pitching) up to and including 7.5 degrees by bow or stern.	

ITEM NO.	SWBS NO.	SWBS TITLE AND TOPIC	STANDARD	AMPLIFICATION OF STANDARD	REMARKS
5	070	General Requirements for Design and Construction - Service Operation During Ship Motion in a Seaway	SOLAS Part C, Reg. 26.6	Main propulsion machinery and all auxiliary machinery essential to the propulsion and the safety of the ship shall, as fitted in the ship, be designed to operate when the ship is upright and when inclined at any angle of list up to and including 10 degrees either way under static conditions and 22.5 degrees under dynamic conditions (rolling) either way and simultaneously inclined dynamically (pitching) 7.5 degrees by bow or stern.	
6	070	General Requirements for Design and Construction – Shipboard Environmental Requirements	ABS 4-1-1/7.11	Inclinations - Machinery installations are to be designed such as to ensure proper operations under the conditions as shown in 4-1-1/Table 7. Ambient temperature - For ships of unrestricted service, ambient temperature as indicated in 4-1-1/Table 8 is to be considered in the selection and installation of machinery, equipment and appliances. For ships of restricted or special service, the ambient temperature appropriate to the special nature is to be considered.	
7	071	Access - Equipment Access	USCG Cutter Certification Plan, Sort #26, December 2000	Visual and physical access shall be provided for operation of machinery and equipment. Maintenance envelopes for any machinery or equipment shall include the space to remove or replace parts plus the space required for performing organizational level maintenance.	
8	071	Access - Uptakes and Stacks	USCG Cutter Certification Plan, Sort #29, December 2000	Access should anticipate need for maintenance of fans and diesel exhaust system components including expansion joints and flanged connections by including, ladders and platforms.	
9	073	Noise, Vibration and Resilient Mounts - Allowable Noise Levels	USCG Cutter Certification Plan, Sort #31, December 2000	Allowable noise levels depend on the usage of the space. Space definitions generally follow Navy practice. Category definitions:	

ITEM NO.	SWBS NO.	SWBS TITLE AND TOPIC	STANDARD	AMPLIFICATION OF STANDARD	REMARKS
			USCG Cutter Certification Plan, Sort #31, December 2000 (cont'd)	Category D. High noise level area where direct voice communication is not critical, where personal hearing protection is not provided, and prevention of hearing loss is the primary consideration. Category D spaces shall include as a minimum: Auxiliary Machinery Rooms, Steering Gear Room, Workshops (with repair equipment secured), Scullery, and Laundry. Category G. High noise level areas where prevention of hearing loss is obtained through the use of personal hearing protection. Notes: 1. Allowable noise levels expressed as A weighted average sound pressure levels (SPL) in decibels referenced to 20μ Pascals. The following table provides airborne noise limits. Category Limit dB(A) D 85 G 115	
10	073	Noise, Vibration and Resilient Mounts - Allowable Noise Levels - High Speed Craft	USCG Cutter Certification Plan, Sort #32, December 2000	In recognition of the greater difficulty in meeting stringent noise levels on high-speed craft, and their weight critical nature, a different approach for setting allowable noise levels is used on these craft. Allowable noise levels still depend on the usage of the space. Definitions: Category D. High noise level area where direct voice communication is not critical, where personal hearing protection is not provided, and prevention of hearing loss is the primary consideration. Category D spaces shall include as a minimum: Auxiliary Machinery Rooms, Steering Gear Room, Workshops	

ITEM NO.	SWBS NO.	SWBS TITLE AND TOPIC	STANDARD	AMPLIFICATION OF STANDARD	REMARKS
			USCG Cutter Certification Plan, Sort #32, December 2000 (cont'd)	(with repair equipment secured), Scullery, and Laundry. Category G. High noise level areas where prevention of hearing loss is obtained through the use of personal hearing protection. Notes: 1. Allowable noise levels expressed as A-weighted sound pressure levels (SPL) in decibels referenced to 20μ Pascals. In addition, octave-band levels are imposed from the 31.5 Hertz (Hz) to 250 Hz octave-bands. 2. Allowable noise levels are also imposed as a function of vessel speed. More stringent noise levels are imposed on typical patrol conditions where the vessel could be expected to spend the majority of its operational time. Higher allowable noise levels have been imposed at maximum vessel speeds (at full propulsion power). Octave-band limits apply to both Patrolling and Max Speed conditions. The following table provides airborne noise limits. Category Limit (dB(A)) Max Speed Patrolling D 85 85 G 120 120	
11	073	Noise, Vibration and Resilient Mounts - Applicable Conditions	USCG Cutter Certification Plan, Sort #35, December 2000	Noise/vibration limits are applicable in any normal steady-state operating conditions which would subject the crew to a noise or vibration hazard, degrade communication in critical command and control spaces, or degrade crew habitability beyond stated limits. This includes all propulsion powers up through maximum installed power, operation of ventilation systems at their highest settings, and operation of active sonar (if equipped). Steady-state operation includes intermittent operation of equipment that is	

ITEM NO.	SWBS NO.	SWBS TITLE AND TOPIC	STANDARD	AMPLIFICATION OF STANDARD	REMARKS
			USCG Cutter Certification Plan, Sort #35, December 2000 (cont'd)	operated as part of the crew's routine duties. It does not include short duration transients events having a duration of less than 15 minutes or impact type noise/vibrations, such as wave slap noise, landing of the boats in their cradles, machinery starting/stopping transients.	
12	073	Noise, Vibration and Resilient Mounts - Balance Requirements For Rotating Equipment	USCG Cutter Certification Plan, Sort #42, December 2000	ISO 1940/1 provides balance grades for different equipment. It has been past CG practice to use MIL-STD-167-1, type II for balance requirements. Use of MIL-STD-167-1 is an acceptable alternative. As a minimum, HVAC machinery, propulsion related auxiliaries, and fire pumps shall meet the balance grades identified in ISO 1940/1. Some critical components have additional balance requirements that are specified within their respective SWBS Sections.	
13	073	Noise, Vibration and Resilient Mounts - Environmental Vibration Guidelines for Equipment	USCG Cutter Certification Plan, Sort #41, December 2000	ISO 10055 defines vibration testing requirements for shipboard equipment and machinery components. The standard is used for type testing of the following equipment: propulsion system machinery, control and instrumentation, navigation and communication equipment, mast-mounted equipment, and components. The test is intended to locate resonance of the equipment and impose endurance tests at these frequencies. Qualifying equipment to MIL-STD-167-1, Type I vibration is acceptable.	
14	073	Noise, Vibration and Resilient Mounts - Resilient Mounts	USCG Cutter Certification Plan, Sort #48, December 2000	Navy standard resilient mounts and/or commercial equivalents are to be utilized. Exceptions are made for resilient mounts supplied with propulsion diesels, gas turbines, main reduction gears and high temperature applications (above 125°F). Navy standard mounts have been specifically designed for a marine environment. Design data/procedures as well as installation, inspection, and replacement criteria are well established and readily available. Life cycle support is guaranteed	

ITEM NO.	SWBS NO.	SWBS TITLE AND TOPIC	STANDARD	AMPLIFICATION OF STANDARD	REMARKS
			USCG Cutter Certification Plan, Sort #48, December 2000 (cont'd)	through the Navy stock system.	
15	073	Noise, Vibration and Resilient Mounts - Resilient Mounts	USCG Cutter Certification Plan, Sort #49, December 2000	Resilient mount noise isolation systems are to be designed IAW procedures provided in NAVSEA S9073-A2-HBK-010. Resilient mount noise isolation systems are defined as the resilient mounts, their loading, the local foundation design, flexible pipe and duct connections, flexible electrical power and grounding cable designs, clearance calculations, and any auxiliary shock snubbers. Specific design and installation details described in the cited handbook are also required, such as not painting resilient elements, no welding or flame cutting in way of resilient mounts, etc.	
16	073	Noise, Vibration and Resilient Mounts - Resilient Mounts	USCG Cutter Certification Plan, Sort #50, December 2000	Distributed Isolation Mount (DIM) design requirements.	
17	073	Noise, Vibration and Resilient Mounts - Resilient Mounts	USCG Cutter Certification Plan, Sort #51, December 2000	Flexible piping connections on resiliently mounted equipment are to be multi-leg flex hose assemblies.	
18	073	Noise, Vibration and Resilient Mounts - Resilient Mounts	USCG Cutter Certification Plan, Sort #52, December 2000	Selection and design of the resilient mounts are to be such that rigid body mounted natural frequencies do not coincide within ± 10 percent of hull critical frequencies at or above 50% of rated propulsion power, nor within ± 10% of the rotating, frequencies of the mounted equipment.	

ITEM NO.	SWBS NO.	SWBS TITLE AND TOPIC	STANDARD	AMPLIFICATION OF STANDARD	REMARKS
19	073	Noise, Vibration, and Resilient Mounting – Machinery Space Noise	CFR, Title 46, Sec. 58.01-50, October 2000	Each machinery space must be designed to minimize the exposure of personnel to noise in accordance with IMO Assembly Resolution A.468(XII), Code on Noise Levels on Board Ships, 1981. No person may encounter a 24-hour effective noise level greater than 82 dB(A) when noise is measured using a sound-level meter and an A-weighting filter. Except as allowed by paragraph (c) of this section, no machinery space may exceed the noise levels given in paragraph (b) of this section.	
20	073	Noise, Vibration, and Resilient Mountings – Airborne Noise Levels	GENSPEC, Sect. 073b, 1995 Edition	Table I indicates acceptance airborne noise levels for the standard octave bands for airborne noise categories B, C, D, and E, as well as the Speech Interference Level (SIL) requirement for categories A, E, and F. The noise level in any one octave band may be exceeded by 2 decibels for categories B, C, D, and E.	
21	073	Noise, Vibration, and Resilient Mountings – Mechanical Vibration	GENSPEC, Sect. 073c, 1995 Edition	The ship and all ship components shall be free from excessive vibration. Vibration is excessive when it interferes, or threatens to interfere, with the proper operation of any ship component. All limitations, calculations, and analyses for vibration and balancing of electrical, hull, and machinery equipment and components shall comply with MIL-STD-167.	
22	073	Noise, Vibration, and Resilient Mountings – Noise and Vibration Tests	GENSPEC, Sect. 073d, 1995 Edition	Shop tests shall be conducted to measure airborne and structureborne noise on specified equipment. The tests and analyses shall be conducted in accordance with MIL-STD-740. Before vibration testing, all shock tests required in Sect. 072 shall have been completed. Machinery and equipment units shall be tested in accordance with the requirements of MIL-STD-167, except for the following:	

ITEM NO.	SWBS NO.	SWBS TITLE AND TOPIC	STANDARD	AMPLIFICATION OF STANDARD	REMARKS
			GENSPEC, Sect. 073d, 1995 Edition (cont'd)	Equipment identical to previously approved equipment. Equipment and components over 10,000 pounds in weight, or of such unusual shape or size that is impractical to test them on available testing machines. Test equipment and equipment for dockside use only.	
23	073	Noise, Vibration, and Resilient Mountings – Propulsion Machinery	SOLAS Part C, Reg. 26.8	Special consideration shall be given to the design, construction and installation of propulsion machinery systems so that any mode of their vibrations shall not cause undue stresses in this machinery in the normal operating ranges.	
24	073	Noise, Vibration, and Resilient Mountings – Resilient Mounting	GENSPEC, Sect. 073e, 1995 Edition	Mountings shall comply with Mil. Specs. MIL-M-17191, MIL-M-17508, MIL-M-19379, MIL-M-19863, MIL-M-21649, MIL-M-24476 or drawing, NAVSHIPS No. 803-2145600, as applicable. Mounts in accordance with Mil. Spec. MIL-M-24476 shall be used only as pipe supports. Where the installation requires the use of other mountings, these mountings shall be tested by the Contractor in accordance with Mil. Spec. MIL-M-17185 prior to application for shipboard use. Mountings shall be used only for the specified application or, where approved, for machinery and equipment which fail to meet noise, shock, or vibration requirements. All resiliently mounted equipment shall have flexible connections. Mountings shall not be used where the temperature at the mounting exceeds 125 degrees F, without prior NAVSEA approval.	
25	073	Noise, Vibration, and Resilient Mountings – Restrictions	SOLAS Part C, Reg. 36	Measures shall be taken to reduce machinery noise in machinery spaces to acceptable levels as determined by the Administration. If this noise cannot be sufficiently reduced the source of excessive noise shall be suitably insulated or isolated or a refuge from noise	

ITEM NO.	SWBS NO.	SWBS TITLE AND TOPIC	STANDARD	AMPLIFICATION OF STANDARD	REMARKS
			SOLAS Part C, Reg. 36 (cont'd)	shall be provided if the space is required to be manned.	
26	078	Materials - Prohibitions	USCG Cutter Certification Plan, Sort #13, December 2000	Asbestos shall not be used. Polychlorinated biphenyl (PCB) shall not be used.	
27	078	Materials Requirements - General	GENSPEC, Sect. 078, 1995 Edition	This section defines the criteria for material selection and corrosion prevention and control. It also addresses the required standards of design, materials corrosion, workmanship, installation and inspection.	
28	094	Ship Trials – Sea Trials	ABS 4-1-1/9	A final under-way trial is to be made of all machinery, steering gear, anchor windlass, stopping and maneuvering capability, including supplementary means for maneuvering, if any. The entire machinery installation is to be operated in the presence of the Surveyor to demonstrate its reliability and sufficiency to function satisfactory under operating conditions and its freedom from dangerous vibration and other detrimental operating phenomena at speeds within the operating range. All automatic controls, including tripping of all safety protective devices that affect the vessel's propulsion system, are to be tested underway or alongside the pier, to the satisfaction of the Surveyor. References are also to be made to 4-9-5/5 for more detailed requirements on remote propulsion control and automation sea trials. The viscosity of the fuel used on the sea trial will be entered in the classification report.	

ITEM NO.	SWBS NO.	SWBS TITLE AND TOPIC	STANDARD	AMPLIFICATION OF STANDARD	REMARKS
29	094	Ship Trials – Trial-Trip Observance	CFR, Title 46, Sec. 58.01-30, October 2000	The operation of main and auxiliary systems shall be observed on the trial trip of each new vessel and all deficiencies, which affect the safety of the vessel, shall be corrected to the satisfaction of the Officer in Charge, Marine Inspection.	
30	200	General Requirements for Machinery Plant - Alignment	USCG Cutter Certification Plan, Sort #170, December 2000	Rotating machinery shall be aligned in accordance with manufacturer requirements.	
31	200	General Requirements for Machinery Plant – Applicable Standards	CFR, Title 46, Sec. 58.01-5, October 2000	The applicable standards established by the American Bureau of Shipping or other recognized classification society, may be used as the standard for the design, construction, and testing of main and auxiliary machinery except as modified in this subchapter.	
32	200	General Requirements for Machinery Plant – Arrangement and Installation	GENSPEC, Sect. 200d, 1995 Edition	Machinery arrangements shall provide the best military protection for all vital machinery and equipment and shall ensure that damage to, or flooding of, any watertight machinery space will cause the least interference with operation of machinery and equipment in any other machinery space. Components of the machinery plant and piping shall be arranged and installed to permit ready accessibility for operation, inspection, and maintenance. Machinery and equipment having surface temperatures of 400 degrees F or greater under their insulation shall be located at least 18 inches from tanks containing flammable fluids (other than lube oil). Machinery and equipment having surface temperatures of 650 degrees F or greater under their insulation shall be located at least 18 inches from tanks containing lube oil. They shall not be located at a level lower than tanks containing flammable liquids unless they are at least 10 feet (measured horizontally) from the tank, or unless they are shielded from possible tank leakage. See	

ITEM NO.	SWBS NO.	SWBS TITLE AND TOPIC	STANDARD	AMPLIFICATION OF STANDARD	REMARKS
			GENSPEC, Sect. 200d, 1995 Edition (cont'd)	Sect. 505 for similar restrictions applicable to piping. Vapor losses from piping, machinery, and equipment shall be minimized or eliminated where possible.	
33	200	General Requirements for Machinery Plant – Astern Power	CFR, Title 46, Sec. 58.05-5, October 2000	All vessels shall have sufficient power for going astern to secure proper control of the ship in all normal circumstances.	
34	200	General Requirements for Machinery Plant – Astern Power	SOLAS Part C, Reg. 28.1	Sufficient power for going astern shall be provided to secure proper control of the ship in all normal circumstances.	
35	200	General Requirements for Machinery Plant – Astern Propulsion Power	ABS 4-1-1/7.5	Sufficient power for going astern is to be provided to secure proper control of the vessel in all normal circumstances. The astern power of the main propelling machinery is to be capable of at least 30 minutes of astern operation at 70% of the ahead rpm corresponding to the maximum continuous ahead power. For main propulsion systems with reversing gears, controllable pitch propellers or electric propulsion drive, running astern is not to lead to overload of the propulsion machinery.	
36	200	General Requirements for Machinery Plant – Automatic Shutoff	SOLAS Part C, Reg. 26.8	Main propulsion machinery and auxiliary machinery shall be provided with automatic shutoff arrangements in the case of failures, which could result in complete breakdown, serious damage, or explosion.	
37	200	General Requirements for Machinery Plant - Certification	ABS 4-1-1/3.7	Non-mass produced critical machinery, such as propulsion boilers, slow speed diesel engines, turbines, steering gears, and similar critical items are to be individually certified in accordance with the procedure described in 4-1-1/3.1.	

ITEM NO.	SWBS NO.	SWBS TITLE AND TOPIC	STANDARD	AMPLIFICATION OF STANDARD	REMARKS
38	200	General Requirements for Machinery Plant – Cleaning, Inspection and Maintenance	SOLAS Part C, Reg. 26.7	Provisions shall be made to facilitate cleaning, inspection and maintenance of main propulsion and auxiliary machinery including pressure vessels.	
39	200	General Requirements for Machinery Plant – Cold Ship Start	ABS 4-1-1/7.7	Means are to be provided so that machinery can be brought into operation from a cold ship condition using only the facilities available on board.	
40	200	General Requirements for Machinery Plant – Cold Starts	SOLAS Part C, Reg. 26.4	Means shall be provided to ensure that the machinery can be brought into operation form the dead ship condition without external aid.	
41	200	General Requirements for Machinery Plant – Computer Simulations	USCG Cutter Certification Plan, Sort #171, December 2000	The performance of the propulsion system, control system, and interconnected electrical system shall be modeled for all anticipated steady state and transient vessel maneuvers (e.g., crash stops and reversals, full power turns, etc.). The investigation shall provide an assessment of the selected system components and define the operating envelope for the vessel. The following documentation shall be provided: (1) summary of conclusions and recommendations and justification of selected machinery and control configuration, (2) anticipated vessel dynamic performance shall be summarized in both graphic and text formats, (3) system model document, which provides a mathematical representation of the system to be described on the computer, and (4) test report which describe the tests imposed on the model software to verify it and assess its validity.	
42	200	General Requirements for Machinery Plant – Design and Construction	SOLAS Part C, Reg. 26.1	Machinery, pressure vessels, associated piping systems and fittings shall be of a design and construction adequate for the service for which they are intended and shall be so installed and protected as to reduce to a minimum the danger to persons on board with due regard being paid to moving parts, hot surfaces and other hazards.	

ITEM NO.	SWBS NO.	SWBS TITLE AND TOPIC	STANDARD	AMPLIFICATION OF STANDARD	REMARKS
43	200	General Requirements for Machinery Plant – Design and Operation	GENSPEC, Sect. 200c, 1995 Edition	The type and rating of each machinery and equipment component shall be compatible with its service demands. Its size, weight, and complexity shall be held to a minimum consistent with reliable and economical operation and maintenance. The principle of reliability shall be paramount and no compromise of this principle shall be made with any other basic requirement. The machinery plant shall be designed to keep exhaust smoke emission to a minimum at any speed from full power ahead to full power astern, including "standby" conditions. The machinery plant shall operate in a satisfactory manner, over its entire operating range, without exceeding the noise and vibration limitations specified in Sect. 073. Where plants are installed in separate machinery spaces, each plant shall be self-sufficient so that maloperation of one plant will not affect operation of any other plant. System flexibility incorporating cross-connections between plants and by-passes around components shall be provided, as specified in the applicable sections covering piping and electrical systems, to permit warm-up and continued operation under conditions when specified components are inoperative. Loss of power by one propulsion unit while underway and the resultant free turning of its propulsion shafting shall not cause bearing damage to the propulsion unit. Continued operation of a propulsion plant shall not be affected by flooding of the bilge regions, as defined in Sect. 070, of the space in which the plant or a portion of a plant is located.	

ITEM NO.	SWBS NO.	SWBS TITLE AND TOPIC	STANDARD	AMPLIFICATION OF STANDARD	REMARKS
44	200	General Requirements for Machinery Plant - Design for Ship Motions and Attitudes	USCG Cutter Certification Plan, Sort #162, December 2000	Certification requirements applying to both diesels and gas turbines.	
45	200	General Requirements for Machinery Plant – Fuel	USCG Cutter Certification Plan, Sort #165, December 2000	Engines will deliver rated power when operating with fuel that is IAW MIL-F-16884J or NPD MGO.	
46	200	General Requirements for Machinery Plant – Fuel Oil	CFR, Title 46, Sec. 58.01-10, October 2000	Except as otherwise permitted by this section, no fuel oil with a flashpoint of less than 60 deg. C (140 deg. F) may be used. Except as otherwise permitted by Sec. 58.50-1(b), fuel oil with a flashpoint of not less than 43 deg. C (110 deg. F) may be used in emergency generators. Subject to such additional precautions as the Commanding Officer, Marine Safety Center, considers necessary, and provided that the ambient temperature of the space in which such fuel oil is stored or used does not rise to within 10 deg. C (50 deg. F) below the flashpoint of the fuel oil, fuel oil having a flashpoint of less than 60 deg. C (140 deg. F) but not less than 43 deg. C (110 deg. F) may be used in general. The flashpoint of oil must be determined by the Pensky-Martens Closed Tester, ASTM-D93-80.	
47	200	General Requirements for Machinery Plant - General	GENSPEC, Sect. 200b, 1995 Edition	This section contains requirements applicable to the complete machinery plant and supplements requirements specified in other sections of these specifications covering systems and component parts of the plant.	

ITEM NO.	SWBS NO.	SWBS TITLE AND TOPIC	STANDARD	AMPLIFICATION OF STANDARD	REMARKS
48	200	General Requirements for Machinery Plant – General Requirements	CFR, Title 46, Sec. 58.01-1, October 2000	The regulations in this part contain requirements for the design and construction of main and auxiliary machinery installed on vessels.	
49	200	General Requirements for Machinery Plant – Incorporation by Reference	CFR, Title 46, Sec. 58.03-1, October 2000	Certain material is incorporated by reference into this part with the approval of the Director of the Federal Register in accordance with 5 U.S.C. 552(a). The material approved for incorporation by reference in this part and the sections affected is listed in paragraph (b) of this section.	
50	200	General Requirements for Machinery Plant – Installation Plans	USCG Cutter Certification Plan, Sort #169, December 2000	Equipment manufacturer to approve installation plans of all major equipment, such as engines, reduction gears, generators, thrusters, etc.	
51	200	General Requirements for Machinery Plant – Instrumentation	GENSPEC, Sect. 200e, 1995 Edition	The Contractor shall furnish instruments that are not specified in specifications of components but that are necessary for proper operation and control.	
52	200	General Requirements for Machinery Plant – Lifting Gear	GENSPEC, Sect. 200f, 1995 Edition	In addition to the special lifting guides, jacks, and supports furnished by manufacturers of machinery components, the Contractor shall furnish all other lifting gear necessary for ship overhaul of machinery components and piping systems.	
53	200	General Requirements for Machinery Plant – Lifting Gear	USCG Cutter Certification Plan, Sort #168, December 2000	In addition to special lifting guides, jacks and supports furnished by manufacturers of machinery plant components, lifting gear necessary for servicing, removal and overhaul of machinery components and major piping system components (above 100 pounds weight) shall be provided. Where it is necessary to move disassembled parts for repair, inspection or access, overhead rails and trolleys, padeyes, chain hoists, and other necessary gear shall be provided.	

ITEM NO.	SWBS NO.	SWBS TITLE AND TOPIC	STANDARD	AMPLIFICATION OF STANDARD	REMARKS
54	200	General Requirements for Machinery Plant – Machinery Equations	ABS 4-1-1/7.3	The equations for rotating parts of the machinery in Part 4 of the Rules are based upon strength considerations only and their application does not relieve the manufacturer from responsibility for the presence of dangerous vibrations and other considerations in the installation at speeds within the operating range.	
55	200	General Requirements for Machinery Plant – Machinery Guards	CFR, Title 46, Sec. 58.01-20, October 2000	Gears, couplings, flywheels and all machinery capable of injuring personnel shall be provided with adequate covers or guards.	
56	200	General Requirements for Machinery Plant – Main Propulsion Auxiliary Machinery	CFR, Title 46, Sec. 58.01-35, October 2000	Auxiliary machinery vital to the main propulsion system must be provided in duplicate unless the system served is provided in independent duplicate, or otherwise provides continued or restored propulsion capability in the event of a failure or malfunction of any single auxiliary component.	
57	200	General Requirements for Machinery Plant - Maintainability and Accessibility	USCG Cutter Certification Plan, Sort #161, December 2000	Freestanding, oil-tight coamings provided to contain leakage of fluids.	
58	200	General Requirements for Machinery Plant – Material, Design and Construction	CFR, Title 46, Sec. 58.05-1, October 2000	The material, design, construction, workmanship, and arrangement of main propulsion machinery and of each auxiliary, directly connected to and supplied as such, must be at least equivalent to the standards established by the American Bureau of Shipping or other recognized classification society, except as otherwise provided by this subchapter.	
59	200	General Requirements for Machinery Plant – Overpressure Protection	SOLAS Part C, Reg. 26.8	Where main or auxiliary machinery, including pressure vessels or any parts of such machinery, are subject to internal pressure and may be subject to dangerous overpressure, means shall be provided where practicable to protect against such excessive pressure.	

ITEM NO.	SWBS NO.	SWBS TITLE AND TOPIC	STANDARD	AMPLIFICATION OF STANDARD	REMARKS
60	200	General Requirements for Machinery Plant – Overspeed Protection	SOLAS Part C, Reg. 26.8	Where risk from overspeeding of machinery exists, means shall be provided to ensure that the safe speed is not exceeded.	
61	200	General Requirements for Machinery Plant – Plans	ABS 4-1-1/5.3	Machinery plans required to be submitted for review and approval by the Bureau is listed in each of the sections in Part 4. In general, equipment plans are to contain performance data and operational particulars; standard of compliance where standards are used in addition to, or in lieu of, the Rules; construction details such as dimensions, tolerances, welding details, welding procedures, material specifications, etc.; and engineering calculations or analyses in support of the design. System plans are to contain a bill of material with material specifications or particulars, a legend of symbols used, system design parameters, and are to be in a schematic format.	
62	200	General Requirements for Machinery Plant – Pressure Vessels	ABS 4-4-1/1.1	Regardless of the system in which they formed a part, boilers, fired and unfired heaters, pressure vessels and heat exchangers of the following categories are to be subjected to the provisions of this section: Boilers and steam generators with design pressure over 3.5 bar (3.6 kgf/cm 2, 50 psi). Fired heaters for oil with design pressure over 1 bar (1 kgf/cm 2, 15 psi). Independent pressure vessel tanks for the carriage of liquefied gases defined in Section 5-8-4. Other pressure vessels and heat exchangers having design pressure, temperature and volume as defined in 4-4-1/Table 1. Boilers and fired heaters not included above, fired inert gas generators and incinerators	

ITEM NO.	SWBS NO.	SWBS TITLE AND TOPIC	STANDARD	AMPLIFICATION OF STANDARD	REMARKS
63	200	General Requirements for Machinery Plant – Pressure Vessels	CFR, Title 46, Sec. 119-330, October 2000	All unfired pressure vessels must be installed to the satisfaction of the cognizant OCMI. The design, construction, and original testing of such unfired pressure vessels must meet the applicable requirements of subchapter F (Marine Engineering) of this chapter.	
64	200	General Requirements for Machinery Plant - Redundancy	USCG Cutter Certification Plan, Sort #163, December 2000	As a minimum, the vessel shall meet the redundancy requirements for class notation R2.	
65	200	General Requirements for Machinery Plant – Reliability and Redundancy	SOLAS Part C, Reg. 26.2	The Administration shall give special consideration to the reliability of single essential propulsion components and may require a separate source of propulsion power sufficient to give the ship a navigable speed, especially in the case of unconventional arrangements.	
66	200	General Requirements for Machinery Plant – Reliability and Redundancy	SOLAS Part C, Reg. 26.3	Means shall be provided whereby normal operation of propulsion machinery can be sustained or restored even though one of the essential auxiliaries becomes inoperative. Special consideration shall be given to the malfunctioning of the following: A generator set which serves as a main source or electrical power The sources of steam supply The sources of water pressure Mechanical air supplies The hydraulic, pneumatic or electrical means for control in main propulsion machinery	
67	200	General Requirements for Machinery Plant - Safety	USCG Cutter Certification Plan, Sort #167, December 2000	Machinery and equipment having surface temperatures of 400° F or greater under their insulation shall be located at least 18 inches from tanks containing flammable fluids (other than lube oil). Machinery and equipment having surface temperatures of 650° F or greater under their insulation shall be located at least 18 inches	

ITEM NO.	SWBS NO.	SWBS TITLE AND TOPIC	STANDARD	AMPLIFICATION OF STANDARD	REMARKS
			USCG Cutter Certification Plan, Sort #167, December 2000 (cont'd)	from tanks containing lube oil. They shall not be located at a level lower than tanks containing flammable liquids unless they are at least 10 feet (measured horizontally) from the tank, or unless they are shielded from the possible tank leakage.	
68	200	General Requirements for Machinery Plant – Shock	GENSPEC, Sect. 200g, 1995 Edition	All systems and components of the propulsion plant, including propeller and shafting systems as well as all other independent auxiliaries necessary for the safety and continued combat capability of the ship shall meet Grade A shock requirements unless otherwise specified.	
69	200	General Requirements for Machinery Plant – Steam Generating Pressure Vessels	SOLAS Part C, Reg. 32.1	Every unfired steam generator shall be provided with not less than two safety valves of adequate capacity. However, having regard to the output or any other features, the Administration may permit only one safety valve to be fitted if it is satisfied that adequate protection against overpressure is thereby provided.	
70	200	General Requirements for Machinery Plant – Steam Generating Pressure Vessels	SOLAS Part C, Reg. 32.4	Every steam generating system which provides services essential for the safety of the ship, or which could be rendered dangerous by the failure of its feedwater supply, shall be provided with not less than two separate feedwater systems from and including the feed pumps. Unless overpressure is prevented by the pump characteristics, means shall be provided which shall prevent over-pressure in any part of the systems.	
71	200	General Requirements for Machinery Plant – Tanks for Flammable and Combustible Oil	CFR, Title 46, Sec. 58.01-55, October 2000	For the purposes of this section, a machinery space of category A is a space that is categorized in paragraph (a) of this section. As far as practicable, each fuel-oil tank must be part of the vessel's structure and be located outside a machinery space of category A. If a fuel-oil tank, other than a double-bottom tank, must be located adjacent to or within a machinery space of category A, it	

ITEM NO.	SWBS NO.	SWBS TITLE AND TOPIC	STANDARD	AMPLIFICATION OF STANDARD	REMARKS
			CFR, Title 46, Sec. 58.01-55, October 2000 (cont'd)	must comply with the requirements of paragraph (c) of this section. No fuel-oil tank may be located where spillage or leakage from it can constitute a hazard by falling on heated surfaces	
72	200	General Requirements for Machinery Plant – Testing	SOLAS Part C, Reg. 26.5	All parts of machinery, all steam, hydraulic pneumatic and other systems and their associated fittings, which are under internal pressure, shall be subjected to appropriate tests including a pressure test before being put into service for the first time.	
73	202	Automated Self-Propelled Vessel Manning – Vital Automation	CFR, Title 46, Sec. 62.50, October 2000	Additional requirements for minimally attended machinery plants require an ECC that monitors all vital engineering systems including electrical power generation and distribution and many others. Also states electrical systems (1) The ECC must include the controls and instrumentation necessary to place the ship service and propulsion generators in service in 30 seconds. (2) The main distribution and propulsion switchboards and generator controls must either be located at the ECC, if the ECC is within the boundaries of the main machinery space, or the controls and instrumentation required by part 111 of this chapter must be duplicated at the ECC. Controls at the switchboard must be able to override those at the ECC, if separate. Also see Sec. 111.12-11(g) and Sec. 111.30-1(a)(4) regarding switchboard location. Additional requirements for periodically unattended machinery plants (not all are listed below) – (a) General. The requirements of this section must be met in addition to those of Sec. 62.50-20 of this part. (b) Automatic transfer. (c) Fuel systems. (d) Starting systems. (e) Assistance-needed alarm.	

ITEM NO.	SWBS NO.	SWBS TITLE AND TOPIC	STANDARD	AMPLIFICATION OF STANDARD	REMARKS
			CFR, Title 46, Sec. 62.50, October 2000 (cont'd)	(f) Remote alarms. (g) ECC alarms. (h) Fire control station. (i) Oil leakage. (j) Maintenance program. (k) Continuity of electrical power. The electrical plant must meet sections 41.75.1 and 41.75.3 of the American Bureau of Shipping's ''Rules for Building and Classing Steel Vessels" and must (1) not use the emergency generator for this purpose, (2) restore power in not more than 30 seconds, and (3) account for loads permitted by Sec. 111.70-3(f) of this chapter to automatically restart.	
74	202	Electric Plant - Automation	GENSPEC, Sect. 202g, 1995 Edition	Centralized electric plant control and monitoring, if required, shall include the capability to adjust voltage and frequency of ship service generators, synchronize and parallel ship service generators, trip and close bus tie circuit breakers, trip shore power breakers and start or stop diesel and gas turbine ship service generators. Instrumentation shall be provided to monitor generator prime movers, ship service generators, emergency generators and the electric plant distribution system. Automatic paralleling and automatic load shedding, if provided, shall be remotely controlled and monitored.	
75	202	Environmental Design Standards – Vital Automation	CFR, Title 46, Sec. 62.25-30, October 2000	All automation must be suitable for the marine environment and must be designed and constructed to operate indefinitely under the following conditions: (1) Ship motion and vibration described in section 41.37 of the American Bureau of Shipping's ``Rules for Building and Classing Steel Vessels." (2) Ambient air temperatures described in section 41.29.1 and 41.29.2 of the American Bureau of Shipping's ``Rules for Building and Classing	

ITEM NO.	SWBS NO.	SWBS TITLE AND TOPIC	STANDARD	AMPLIFICATION OF STANDARD	REMARKS
			CFR, Title 46, Sec. 62.25-30, October 2000 (cont'd)	Steel Vessels." (3) Electrical voltage and frequency tolerances described in section 41.29.3 of the American Bureau of Shipping's ''Rules for Building and Classing Steel Vessels." (4) Relative humidity of 0 to 95% at 45°C. (5) Hydraulic and pneumatic pressure variations described in section 41.39.3e of the American Bureau of Shipping's ''Rules for Building and Classing Steel Vessels."' Low voltage electronics must be designed with due consideration for static discharge, electromagnetic interference, voltage transients, fungal growth, and contact corrosion.	
76	202	Equipment (ACC) – Vital Automation	ABS 4-9-3/17	Components, equipment, subsystems, etc. used in control, monitoring and safety systems of propulsion machinery, propulsion boilers and vital auxiliary pumps are to be designed and tested in accordance with the provisions in Section 4-9-7.	
77	202	Fuel Oil System Arrangements (ACC) – Vital Automation	ABS 4-9-3/15.1	Fuel oil settling and service tanks - Low level conditions of fuel oil settling and daily service tanks are to be alarmed at the centralized control station. Where automatic filling is provided, the arrangements are to include automatic pump shutdown and start-up at predetermined high and low levels respectively. In such cases, fuel oil high level alarm is also to be provided. Fuel oil overflow and drain tanks - Fuel oil overflow tanks and fuel oil drain tank receiving fuel oil from drip pans, spill trays and other leakage containment facilities are to be fitted with a high level alarm at the centralized control station. Fuel oil heating - Fuel oil tanks provided with heating arrangements are to be fitted with a fuel oil temperature display and control and with a high temperature alarm at the centralized control station.	

ITEM NO.	SWBS NO.	SWBS TITLE AND TOPIC	STANDARD	AMPLIFICATION OF STANDARD	REMARKS
			ABS 4-9-3/15.1 (cont'd)	Use of cargo as propulsion fuel - Vessels carrying liquefied natural gases that utilize methane as fuel in propulsion machinery spaces are to meet the provisions Section 5-8-16. The monitoring of gas supply, shut-off valve and propulsion machinery space ventilation, as required therein is to be fitted at the centralized control station.	
78	202	General Requirements for All Automated Vital Systems – Vital Automation	CFR, Title 46, Sec. 62.25-1, October 2000	Vital systems that are automatically or remotely controlled must be provided with-- (1) An effective primary control system; (2) A manual alternate control system; (3) A safety control system, if required by Sec. 62.25-15; (4) Instrumentation to monitor system parameters necessary for the safe and effective operation of the system; and (5) An alarm system if instrumentation is not continuously monitored or is inappropriate for detection of a failure or unsafe condition. Automation systems or subsystems that control or monitor more than one safety control, interlock, or operating sequence must perform all assigned tasks continuously, i.e., the detection of unsafe conditions must not prevent control or monitoring of other conditions. Vital control and alarm system consoles and similar enclosures that rely upon forced cooling for proper system operation must meet section 41.23.2 of the American Bureau of Shipping's ``Rules for Building and Classing Steel Vessels."	
79	202	Generator and Electrical Systems (ACC) – Vital Automation	ABS 4-9-3/13.9	Alarms and displays (A and D columns) in 4-9-3/Table 2 and 4-9-4/Table 8 are applicable. Safety system functions (Auto shutdown column) in 4-9-4/Table 8 are not mandatory for assigning ACC notation, except for automatic shutdowns required in 4-9-1/13. The following are also to be complied with. Starting of generators - In addition to complying with 4-8-2/3.11	

ITEM NO.	SWBS NO.	SWBS TITLE AND TOPIC	STANDARD	AMPLIFICATION OF STANDARD	REMARKS
			ABS 4-9-3/13.9 (cont'd)	for automatically restoration power to equipment necessary for propulsion, steering and safety, arrangements are to be provided to enable manually start and place in service any generator from a single location. This location may be at the main switchboard or in the centralized control station. Monitoring of generators - Where the main switchboard is not located in the centralized control station alarms and displays for monitoring the generators and main switchboard, as indicated in 4-9-3/Table 2, are to be provided in the centralized control station.	
80	202	Instrumentation, Alarms, and Centralized Stations – Vital Automation	CFR, Title 46, Sec. 62.25-20, October 2000	Instrumentation, alarms, and centralized stations- (a) General. Minimum instrumentation and alarms required for specific types of automated vital systems are listed in Table 62.35-50. (b) Instrumentation Location (c) Instrumentation details (d) Alarms (e) Alarm Details (f) Summarized and grouped alarms (g) Central control locations	
81	202	Machinery Centralized Control System – Automatic Shut-off	CFR, Title 46, Sec. 58.05-10, October 2000	Main propulsion machinery must be provided with automatic shut-off controls in accordance with part 62 of this subchapter. These controls must shut down main propulsion machinery in case of a failure, such as failure of the lubricating-oil supply, that could lead rapidly to complete breakdown, serious damage, or explosion.	
82	202	Machinery Centralized Control System – Means of Stopping Machinery	CFR, Title 46, Sec. 58.01-25, October 2000	Machinery driving forced-draft and induced-draft fans, fuel-oil transfer pumps, fuel-oil unit and service pumps, and similar fuel-oil pumps must be fitted with remote controls from a readily accessible position outside the space concerned so that the fans or	

ITEM NO.	SWBS NO.	SWBS TITLE AND TOPIC	STANDARD	AMPLIFICATION OF STANDARD	REMARKS
			CFR, Title 46, Sec. 58.01-25, October 2000 (cont'd)	pumps may be stopped in case of fire in the compartment in which they are located. The controls must be suitably protected against accidental operation and against tampering and must be suitably marked.	
83	202	Machinery Centralized Control System – Operation and Control Requirements	SOLAS Part C, Reg. 31.1	Main and auxiliary machinery essential for the propulsion and safety of the ship shall be provided with effective means for its operation and control.	
84	202	Machinery Centralized Control System – Operation and Control Requirements	SOLAS Part C, Reg. 31.2	Where remote control of propulsion machinery from the navigation bridge is provided and the machinery spaces are intended to be manned, the following shall apply: The main propulsion machinery shall be provided with an emergency stopping device on the navigation bridge, which shall be independent of the navigation bridge control system. Remote control of the propulsion machinery shall be possible only from one location at a time; at such locations interconnected control positions are permitted. It shall be possible to control the propulsion machinery locally, even in the case of failure in any part of the remote control system. The design of the remote control system shall be such that in case of its failure an alarm will be given.	
85	202	Machinery Centralized Control System – Operation and Control Requirements	SOLAS Part C, Reg. 31.4	In general, automatic starting, operational and control systems shall include provisions for manually overriding the automatic controls. Failure of any part of such systems shall not prevent the use of the manual override.	
86	202	Machinery Centralized System – Vital Automation	GENSPEC, Sect. 202, 1995 Edition	General - Requirements herein apply to surface ships fitted with a Machinery Centralized Control System (MCCS). Machinery and systems that are typically controlled and monitored by the MCCS include the propulsion plant, electric plant, independent auxiliary	

ITEM NO.	SWBS NO.	SWBS TITLE AND TOPIC	STANDARD	AMPLIFICATION OF STANDARD	REMARKS
			GENSPEC, Sect. 202, 1995 Edition (cont'd)	plants, cargo fuel systems, aviation JP-5 systems, damage control systems and ballasting systems. The Contractor shall be responsible for the MCCS design including selection and integration of the MCCS with the equipment it monitors and controls. Operational requirements - Primary MCCS design considerations shall include operating locations, control logic location, remote control requirements, automatic control requirements and control transfer. Electrical requirements - MCCS equipment shall be designed to operate and deliver rated performance from type I power in accordance with DOD-STD-1399, Section 300. MCCS equipment shall be operable as soon as it is energized and shall operate at rated accuracy within 30 minutes from the time it is energized. Overvoltage - MCCS electrical and electronic equipment shall be capable of being operated continuously for a period of 12 hours from a 60-Hz source with the voltage at 130 percent of the nominal voltage rating, and maximum operating ambient temperature. Loss of control power - Provisions shall be made to protect MCCS and plant machinery during loss of control power.	
87	202	Machinery Plant Control and Monitoring System – EMI/RFI	USCG Cutter Certification Plan, Sort#206, December2000	Criteria for EMI/RFI. MIL STD 461E is an acceptable alternative.	

ITEM NO.	SWBS NO.	SWBS TITLE AND TOPIC	STANDARD	AMPLIFICATION OF STANDARD	REMARKS
88	202	Machinery Plant Control and Monitoring System – EMI/RFI - High Speed Craft	USCG Cutter Certification Plan, Sort#207, December2000	Criteria for EMI/RFI, MIL-STD 461E are an acceptable alternative.	
89	202	Machinery Plant Control and Monitoring System – General Requirements	USCG Cutter Certification Plan, Sort#173, December2000	The SOLAS automation standards are to be incorporated into the design in addition to the ABS Rules (Part 4 Section 11).	
90	202	Machinery Plant Control and Monitoring System – General Requirements	USCG Cutter Certification Plan, Sort#175, December2000	Machinery shall be monitored, alarmed, and controlled from the engineering control center (ECC). The ECC shall display detailed equipment status and alarm information for all monitored systems.	
91	202	Machinery Plant Control and Monitoring System – General Requirements	USCG Cutter Certification Plan, Sort#176, December2000	Where applicable, Battle Overrides shall be provided for propulsion, electrical power generation/distribution, weapons support machinery, and other vital operational/mission critical equipment. This requirement is to prevent automatic shutdown modes of essential systems. Systems in Battle Override status shall continue to alarm and provide data to all control stations.	
92	202	Machinery Plant Control and Monitoring System – General Requirements	USCG Cutter Certification Plan, Sort#184, December2000	There should be a capability of simulating selected major control and monitoring functions and malfunctions.	
93	202	Machinery Plant Control and Monitoring System – General Requirements	USCG Cutter Certification Plan, Sort#185, December2000	The MPCMS system shall have the capability of testing MPCMS hardware and software, independent of normal operations.	

ITEM NO.	SWBS NO.	SWBS TITLE AND TOPIC	STANDARD	AMPLIFICATION OF STANDARD	REMARKS
94	202	Machinery Plant Control and Monitoring System – General Requirements	USCG Cutter Certification Plan, Sort#186, December2000	There should be a capability to collect data while the MPCMS is online.	
95	202	Machinery Plant Control and Monitoring System – Sensors	USCG Cutter Certification Plan, Sort#205, December2000	Sensors shall be used that require little or no calibration.	
96	202	Machinery Plant Control and Monitoring System – Tank Level Indicating (TLI) System	USCG Cutter Certification Plan, Sort#195, December2000	The MPCMS and its TLI subsystem shall provide the means to monitor & control major tanks, valves, and pumps. MIL-STD-23886 is an acceptable alternative.	
97	202	Machinery Plant Control and Monitoring System – Tank Level Indicating (TLI) System	USCG Cutter Certification Plan, Sort#197, December2000	TLI system pumps, valves and level readings shall be automated for transferring fuel, water, oil, waste or ballast.	
98	202	Machinery Plant Control and Monitoring System – Trending and Analysis System	USCG Cutter Certification Plan, Sort#202, December2000	The system shall provide an audible and visual alarm to alert trending indications for required maintenance or a predicted fault. All alarms shall be monitored and logged by the MPCMS.	
99	202	Machinery Plant Control and Monitoring System – Vital Systems	USCG Cutter Certification Plan, Sort#177, December2000	This CFR regulation provides requirements for the automation of vital systems. These requirements are in addition to and compliment previous automation standards.	
100	202	Machinery Plant Control and Monitoring System (MPCMS) – General Requirements	USCG Cutter Certification Plan, Sort#172, December2000	This standard presents the minimum automation requirements for machinery systems. The ABS requirements for ACCU shall be used as a minimum set of monitored and displayed parameters. Where summary alarms/conditions are used, the operator will also	

ITEM NO.	SWBS NO.	SWBS TITLE AND TOPIC	STANDARD	AMPLIFICATION OF STANDARD	REMARKS
			USCG Cutter Certification Plan, Sort#172, December2000	be given actual parametric data on the monitored machinery. Additional Machinery and monitoring points are indicated in the 200 and 500 series SWBS.	
101	202	Manual Alternate Control Systems – Vital Automation	CFR, Title 46, Sec. 62.25-10, October 2000	Manual alternate control systems must (1) be operable in an emergency and after a remote or automatic primary control system failure, (2) be suitable for manual control for prolonged periods, (3) be readily accessible and operable, and (4) include means to override automatic controls and interlocks, as applicable. Permanent communications must be provided between primary remote control locations and manual alternate control locations if operator attendance is necessary to maintain safe alternate control.	
102	202	Monitoring in Centralized Control Station (ACC) – Vital Automation	ABS 4-9-3/9	Instrumentation - Alarms and displays for monitoring propulsion and auxiliary machinery and for propulsion machinery space are to be provided in the centralized control station as specified in "A" and "D" columns of 4-9-3/Table 2 and in "A" and "D" columns of 4-9-4/Table 3A through 4-9-4/Table 8, as applicable. Alternative monitored parameters, which may provide equal effectiveness, will be considered. Visual display unit - Where a visual display unit (computer monitor) is used to display monitoring information, unless display means other than computer monitor display are provided therein, the centralized control station is to be provided with at least two computer monitors, including keyboards.	
103	202	Note – Vital Automation	ABS 4-9-4	Where periodically unattended propulsion machinery space is intended, the provisions of Section 4-9-4 are to be complied with. Upon verification of compliance, ACCU will be assigned.	

ITEM NO.	SWBS NO.	SWBS TITLE AND TOPIC	STANDARD	AMPLIFICATION OF STANDARD	REMARKS
			ABS 4-9-4 (cont'd)	ACCU indicates that a self-propelled vessel is fitted with various degrees of automation and with remote monitoring and control system to enable the propulsion machinery space to be periodically unattended and the propulsion control to be effected primarily from the navigating bridge. Unless otherwise stated, requirements that apply for ACC also apply for ACCU.	
104	202	Propulsion Auxiliaries (ACC) – Vital Automation	ABS 4-9-3/13.13	The centralized control station is to be provided with means to remotely start and stop auxiliary pumps associated with the operation of the following: Propulsion engine Electrical power generators Controllable pitch propellers Propulsion boilers and boilers supporting propulsion (including power generation) Machinery space bilge system Fuel oil transfer system Automatic transferring of vital auxiliary pumps, where fitted, is to be alarmed at the centralized Control station.	
105	202	Reliability and Safety Criteria, All Automated Vital Systems – Vital Automation	CFR, Title 46, Sec. 62.30, October 2000	Failsafe – (a) The failsafe state must be evaluated for each subsystem, system, or vessel to determine the least critical consequence. (b) All automatic control, remote control, safety control, and alarm systems must be failsafe. Independence – (a) Single non-concurrent failures in control, alarm, or instrumentation systems, and their logical consequences, must not prevent sustained or restored operation of any vital system or systems. (b)(1) Except as provided in paragraphs (b)(2) and	

ITEM NO.	SWBS NO.	SWBS TITLE AND TOPIC	STANDARD	AMPLIFICATION OF STANDARD	REMARKS
			CFR, Title 46, Sec. 62.30, October 2000 (cont'd)	(b)(3) of this section, primary control, alternate control, safety control, and alarm and instrumentation systems for any vital system must be independent of each other. (2) Independent sensors are not required. (3) The safety trip control of Sec. 62.35-5(b)(2) must be independent and physically separate from all other systems. (c) Two independent sources of power must be provided for all primary control, safety control, instrumentation and alarm systems. Failure of the normal source of power must actuate an alarm in the machinery spaces. One source must be from the emergency power source (see part 112 of this chapter, Emergency Lighting and Power Systems) unless one of the sources is (1) Derived from the power supply of the system being controlled or monitored; (2) A power take-off of that system; of (3) An independent power source equivalent to the emergency power source. Testing – (a) Automated vital systems must be tested in accordance with subpart 61.40 of this chapter. (b) On-line built-in test equipment must not lock out or override safety trip control systems. This equipment must indicate when it is active.	
106	202	Remote Controls from Centralized Control Station (ACC) – Vital Automation	ABS 4-9-3/7	Necessary controls to operate the propulsion machinery and its associated auxiliary systems are to be provided in the centralized control station. This includes the following control functions. i) Remote propulsion control as provided in Section 4-9-2. ii) Put on-line a standby generator as described in 4-9-3/13.9.1. iii) Start, stop and transfer auxiliaries necessary for the operation of propulsion and power generation machinery as described in 4-9-3/13.13. All required controls are shown in the "C" column of 4-9-3/Table 2.	

ITEM NO.	SWBS NO.	SWBS TITLE AND TOPIC	STANDARD	AMPLIFICATION OF STANDARD	REMARKS
107	202	Requirements for Specific Types of Automated Vital Systems – Vital Automation	CFR, Title 46, Sec. 62.35-40, October 2000	Fuel systems – (a) Level alarms. Where high or low fuel tank level alarms are required, they must be located to allow the operator adequate time to prevent an unsafe condition. (b) Coal fuels. (1) Controls and instrumentation for coal systems require special consideration by the Commandant (G-MSE). (2) Interlocks must be provided to ensure a safe transfer of machinery operation from one fuel to another. (c) Automatic fuel heating. Automatic fuel heating arrangements must meet section 41.78.1 of the American Bureau of Shipping's ``Rules for Building and Classing Steel Vessels." (d) Overflow prevention. Fuel oil day tanks, settlers, and similar fuel oil service tanks that are filled automatically or by remote control must be provided with a high level alarm that annunciates in the machinery spaces and either an automatic safety trip control or an overflow arrangement. Refer to Table 62.35-50—Minimum System and Safety Control Requirements for Specific Automated Vital Systems for more information.	
108	202	Safety Control Systems – Vital Automation	CFR, Title 46, Sec. 62.25-15, October 2000	(a) Minimum safety trip controls required for specific types of automated vital systems are listed in Table 62.35-50 (b) Safety trip controls must not operate as a result of failure of the normal electrical power source unless it is determined to be the failsafe state. (c) Automatic operation of a safety control must be alarmed in the machinery spaces and at the cognizant remote control location. (d) Local manual safety trip controls must be provided for all main boilers, turbines, and internal combustion engines. (e) Automatic safety trip control systems must (1) Be provided where there is an immediate danger that a failure will result in serious damage, complete breakdown, fire, or explosion; (2) Require manual reset prior to renewed operation of the equipment; and (3) Not be provided if safety limit controls provide a safe alternative and trip would result in loss of propulsion.	

ITEM NO.	SWBS NO.	SWBS TITLE AND TOPIC	STANDARD	AMPLIFICATION OF STANDARD	REMARKS
109	202	Safety System (ACC) – Vital Automation	ABS 4-9-3/11	Safety system functions are to be in accordance with 4-9-2/9. As a minimum safety shutdowns specified in 4-9-1/13 are to be provided. Where desired, safety system functions specified in ''Auto start'', ''Auto slowdown'' and ''Auto shutdown'' columns in 4-9-4/Table 3A through 4-9-4/Table 8 may be provided. Override of safety system functions is to be as in 4-9-2/9.5.	
110	202	Safety Systems – Vital Automation	SOLAS Part D, Reg. 52	A safety system shall be provided to ensure that serious malfunctions in machinery, which presents an immediate danger, shall initiate the automatic shutdown of that part of the plant and that an alarm shall be given. Visual means shall be provided to indicate when the override had been activated.	
111	202	Safety Systems (ACCU) – Vital Automation	ABS 4-9-4/13	To allow for unattended operation, the centralized control station is to be provided with safety system functions specified in ''Auto start'', ''Auto slowdown'' and ''Auto shutdown'' columns of 4-9-4/Table 3A through 4-9-4/Table 8. The following features are also applicable. System design - In addition to complying with 4-9-1/9.9 the following are applicable in order to safeguard continued operation of machinery: i) Safety system is to be designed to take the least drastic action first in response to a fault, and when this fails to avert the situation, to intervene sequentially with more drastic actions. The system is to incorporate ability to automatically start a standby pump, or automatic slowdown or automatic shutdown of propulsion machinery, as applicable.	
112	202	Specific Requirements for Propulsion and Auxiliary Machinery (ACCU) – Vital Automation	ABS 4-9-4/15.1	Automatic starting of propulsion auxiliaries - Where power is automatically restored following a blackout as per 4-8-2/3.11, auxiliaries that are essential for propulsion and maneuvering are to be automatically started. In order not to overload the generator while the motors are starting, means such as sequential starting are to be provided where necessary.	

ITEM NO.	SWBS NO.	SWBS TITLE AND TOPIC	STANDARD	AMPLIFICATION OF STANDARD	REMARKS
113	202	System Power Supply (ACCU) – Vital Automation	ABS 4-9-4/3.7	System power supply is to comply with 4-9-3/3.5, except that the power supply status display and the alarm of the failure of either power source are to be provided at the navigating bridge also.	
114	233	Propulsion Diesel Engines – Blowers and Turbochargers	USCG Cutter Certification Plan, Sort #226, December 2000	Drains are required for pockets that might hold water or oil.	
115	233	Propulsion Diesel Engines – Cooling System	USCG Cutter Certification Plan, Sort #219, December 2000	Closed self-contained fresh water system required. Jacket water circulated by engine driven pump. Seawater is not to be circulated directly through engine. Jacket water cooler required to maintain jacket water within engine manufacturer's recommended range at all loads up through 100% vessel rated load with seawater temperature range as given in SWBS Section 070. Jacket water heater required allowing starting and rapid acceptance of load from a shutdown condition. Ambient compartment temperature range assumed to be IAW SWBS Section 512. Jacket water heating system to include circulating pumps and thermostatic controls. Jacket water expansion tank to be located as recommended by engine manufacturer. Expansion tank required being located above engine. Sight glass required; must allow addition of chemical treatment to tank. Jacket water conditioner test kit required. As a minimum, kit must support testing for corrosion inhibitor concentration and chlorides.	

ITEM NO.	SWBS NO.	SWBS TITLE AND TOPIC	STANDARD	AMPLIFICATION OF STANDARD	REMARKS
116	233	Propulsion Diesel Engines - Correction to Observed Power Levels	USCG Cutter Certification Plan, Sort #215, December 2000	Used to correct observed power to standard conditions given in ABS proposed Rules for Certification of Diesel Engines for Naval Marine Applications, Appendix B, Table B/II. This "corrected" power is what must meet the engine specification power requirement.	
117	233	Propulsion Diesel Engines – Emergency Shutdown	USCG Cutter Certification Plan, Sort #225, December 2000	Emergency shutdowns shall be provided; one outside the compartment entrance and another for local control at the engine. Emergency shutdowns shall safely secure the engine within 60 seconds; manual resetting is required. Emergency shutdowns may be mechanically or electrically actuated. If electrically actuated shutdowns are used; they shall secure the engine if the electrical cable between the remote actuator and engine fails. Means shall be provided to prevent accidental shutdown of the engines. Shutdown devices can trip fuel supply, combustion air, or both.	
118	233	Propulsion Diesel Engines - Engine Operating Experience	USCG Cutter Certification Plan, Sort #216, December 2000	The CG as a general policy requires proven engines. Satisfactory service history in a marine environment must be demonstrated. Satisfactory experience shall consist of at least 8,000 operating hours (each) on at least two engines without overhauls; at an engine power rating equal to or greater than the proposed CG application and with an operating profile that is similar to the proposed CG application. Satisfactory service history shall be documented per ABS Proposed Rules for Certification of Diesel Engines for Naval Marine Applications, paragraph 3.5. MIL-E-23457 or MIL-E-24455 is alternative criteria for acceptable operating experience. Engine must have been successfully qualified under cited standards at a power rating equal to or higher than the required engine power rating for Propulsion Diesel Engines - the proposed CG application. The proposed engine must not be significantly different from what had been qualified. Significantly different is defined as changes in	

ITEM NO.	SWBS NO.	SWBS TITLE AND TOPIC	STANDARD	AMPLIFICATION OF STANDARD	REMARKS
			USCG Cutter Certification Plan, Sort #216, December 2000 (cont'd)	hardware that affect engine performance, shaft dynamics, cycle temperatures, or reliability. The MIL-E-23457 or MIL-E-24455 engine rating is not to be treated as a maximum continuous rating (MCR), but only as a means to meet the operating experience criteria. ABS Proposed Rules for Certification of Diesel Engines for Naval Applications, 1999 is alternate criteria for acceptable operating experience. Certification to ABS Proposed Rules for Certification of Diesel Engines for Naval Marine Applications at a power rating equal to greater than the required engine rating for the proposed CG application. The proposed engine must not be significantly different from what had been qualified under the cited ABS Rules. The ABS engine rating is not to be treated as a maximum continuous rating (MCR), but only as a means to meet the operating experience criteria. First-article testing is required per paragraph 1.2 and Appendix B of ABS Proposed Rules for Certification of Diesel Engines for Naval Marine Applications, 1999 if none of the above conditions have been met. Testing is to be done at the proposed engine's MCR power rating.	
119	233	Propulsion Diesel Engines - Engine Power Rating	USCG Cutter Certification Plan, Sort #213, December 2000	Paragraph 3.3.4 of ISO 3046-1: "continuous power" used as the CG definition for the engine's Maximum Continuous Rating (MCR). Paragraph 3.3.6 of ISO 3046-1: "Fuel Stop Power" used as the reference point for high speed craft engine rating.	
120	233	Propulsion Diesel Engines - Environmental Conditions At Which Power Must Be Produced	USCG Cutter Certification Plan, Sort #214, December 2000	ABS Proposed Rules for Certification of Diesel Engines for Naval Marine Applications, 1999, Appendix B, Table B/II to be used as standard operating conditions for both power rating calculations and in-plant testing purposes. Extreme operating ranges at which	

ITEM NO.	SWBS NO.	SWBS TITLE AND TOPIC	STANDARD	AMPLIFICATION OF STANDARD	REMARKS
			USCG Cutter Certification Plan, Sort #214, December 2000 (cont'd)	engines must continuously operate are given in SWBS Section 070.	
121	233	Propulsion Diesel Engines – Exhaust Emissions	USCG Cutter Certification Plan, Sort #227, December 2000	Exhaust emission requirements for marine diesel engines are in a state of flux. As an interim step, the CG will comply with U.S. Navy practice as given in the cited ABS Rules. This will be consistent with IMO MARPOL Annex VI, with regard to emission limits on Nitrous Oxides (NOx), and additionally will require measurement of Particulate Matter, Carbon Monoxide (CO), Carbon Dioxide (CO2), Hydrocarbons (HC), and Oxygen (O2) in the exhaust emissions. Appendix E of the cited ABS standard is modified as follows: Test cycle E2 shall be applied to engines that operate at a constant speed for electric drive applications (for both segregated electric propulsion or integrated electric drive systems). Test cycle E3 shall be applied to variable speed engines driving traditional mechanical transmission systems (for both fixed pitch and controllable pitch propellers). Test cycle D2 shall be applied to constant speed auxiliary engines (such as generator sets). Test cycle C1 shall be applied to variable speed/variable load auxiliary engines. For engines with a rated speed above 2000 rpm, the maximum allowable level on NO_X shall be 9.8 g/kW-h.	
122	233	Propulsion Diesel Engines – Exhaust Emissions	USCG Cutter Certification Plan, Sort #228, December 2000	The EPA has just published new emission rules for large marine engines that would become effective 2004-2007. This will impose limits on HC+NOx, CO, and Particulate Matter. Every attempt shall be made to meet the EPA emission requirements that are in effect at the time the engines are manufactured for the first ship of a class. However, if the need to use an EPA non-compliant engine can be	

ITEM NO.	SWBS NO.	SWBS TITLE AND TOPIC	STANDARD	AMPLIFICATION OF STANDARD	REMARKS
			USCG Cutter Certification Plan, Sort #228, December 2000 (cont'd)	justified through any combination of the following factors, the National Security Exemption may be enacted and a non-compliant engine may be used. (1) Required operational performance cannot be achieved. (2) Required maintenance, reliability, and/or supportability are severely degraded. (3) The Coast Guard incurs unreasonable cost. Appropriate documentation for the selection of any non-compliant engines shall be furnished to the Coast Guard.	
123	233	Propulsion Diesel Engines – Fuel Oil System	USCG Cutter Certification Plan, Sort #220, December 2000	Duplex strainer on pump suction, duplex filter-water separator with duplex pressure gage on pump discharge, relief valve on pump discharge are all required.	
124	233	Propulsion Diesel Engines - General Detailed Requirements	USCG Cutter Certification Plan, Sort #217, December 2000	ABS Proposed Rules for Certification of Diesel Engines for Naval Marine Applications provides detailed engine requirements IAW sited standard, paragraphs: 2.1 – General 3.2.1.7 - Additional technical documentation. Subparagraph (iv) is not applicable. 3.10.1 - Systems review/general. 3.11 - Control and monitoring system. These alarm, control, and monitoring requirements are in addition to those contained in SWBS Sections 202 and 436. 3.12 - Construction Details. Paragraph 3.12.11 - Airborne and structureborne noise does not apply. 3.13 - Installation review 3.15 - Delivery preparation 4.1 - Explosion relief valves	

ITEM NO.	SWBS NO.	SWBS TITLE AND TOPIC	STANDARD	AMPLIFICATION OF STANDARD	REMARKS
125	233	Propulsion Diesel Engines – Plant Engine In-Plant Testing	USCG Cutter Certification Plan, Sort #230, December 2000	Production Engine In-Plant tests refer to all production engines used in CG applications regardless of whether they are destined for the 1st -of-class cutter or follow-on hulls. Production engine test requirements apply to engines that have already met the requirements given above for "Engine Operating Experience". If 1st article testing is required to meet the requirements for "Engine Operating Experience", this testing will be in accordance with ABS Proposed Rules for Certification of Diesel Engines for Naval Marine Applications, Paragraph 1.2 and Appendix B.	
126	233	Propulsion Internal Combustion Engines - Control	GENSPEC, Sect. 233c, 1995 Edition	Each engine shall be capable of control at the engine, in addition to any remote control stations specified. When remote control stations are specified in conjunction with multiple engine installations, provision shall be made for starting, stopping, and control of any combination of engines or any individual engine from each remote control station.	
127	233	Propulsion Internal Combustion Engines – Emission Requirements	Federal Register, Vol. 64, No. 249, Environmental Protection Agency Rules, 29 December 1999	FR Doc. 99-31658, entitled *Control of Emissions of Air Pollution From New Marine Compression-Ignition Engines at or Above 37 kW; Final Rule,* establishes an emission control program for new marine diesel engines rated at or above 37 kW. Section IV of this ruling specifies emission standards and related provisions for commercial marine diesel engines. This section specifies requirements related to test procedures, fuel specifications, certification, and compliance. Section IV describes two sets of standards and categorizes them as Tier 1 and Tier 2 standards. Tier 1 standards refer to MARPOL Annex VI NO_x limits. This final rule is not adopting the MARPOL Annex VI NO_x emission limits under U.S. law, but is encouraging engine manufacturers to make Annex VI compliant engines available and ship owners to	

ITEM NO.	SWBS NO.	SWBS TITLE AND TOPIC	STANDARD	AMPLIFICATION OF STANDARD	REMARKS
			Federal Register, Vol. 64, No. 249, Environmental Protection Agency Rules, 29 December 1999 (cont'd)	purchase and install them on all vessels constructed on or after Jan. 1, 2000. These NO_x requirements are given in Table 2 of this section and are intended to apply to all vessels in a country's fleet. A voluntary certification program has been developed for Tier 1 standards that will allow engine manufacturers to obtain a Statement of Voluntary Compliance to the MARPOL Annex VI NO_x limits. Tier 2 standards provides a second set of requirements using section 213(a)(3) of The Clean Air Act as guidance for setting emission standards for land-based, non-road diesel engines and are serving as the primary basis for the standards that apply to marine diesel engines. Table 3 of this section contains the Tier 2 emission standards for commercial marine diesel engines at or above 37 kW. These standards are more severe than the Tier 1 standards, but are not going to be required of new engines produced until the beginning of 2007.	
128	233	Propulsion Internal Combustion Engines – Emission Requirements	MARPOL Annex VI, 28 October 1997	The provisions of this Annex applies to all ships, except where expressly provided otherwise in regulations 3,5,6,13,15,18 and 19 of this Annex. Regulation 13 states that the operation of each diesel engine with a power output of more than 130 kW to which this regulation applies is prohibited, except when the emission of nitrogen oxides (calculated as the total weighted emission of NO_2) from the engine is within the following limits: 17.0 g/kWh ..... when $n < 130$ rpm $45.0*n^{(-0.2)}$ g/kWh .....when $130 \leq n < 2000$ rpm 9.8 g/kWh ..... when $n \geq 2000$ rpm	

ITEM NO.	SWBS NO.	SWBS TITLE AND TOPIC	STANDARD	AMPLIFICATION OF STANDARD	REMARKS
			MARPOL Annex VI, 28 October 1997 (cont'd)	where n = rated engine speed Chapter 3 of this Annex provides a more detailed graph representing the maximum allowable NO_x emission limit values based on the above formula. Test cycles and weighting factors to be applied shall also be in accordance with Chapter 3 of this Annex. Chapter 5 specifies the measurement and calculation methods for gaseous exhaust emissions from reciprocating internal combustion engines under steady-state conditions, necessary for determining the average weighted value for the NO_x exhaust emission. Chapter 6 specifies procedures for demonstrating compliance with NO_x emission limits on board. Such verification shall be determined by using one of the methods listed in paragraph 6.1 of this chapter.	
129	233	Propulsion Internal Combustion Engines - Installation	GENSPEC, Sect. 233b, 1995 Edition	The Contractor shall be responsible for the shipboard installation and adjustment of the engines and their controls, instruments, and alarms. Induction air shall be from the compartment in which engines are located; see Sect. 512.	
130	233	Propulsion Internal Combustion Engines – Instruments and Alarms	GENSPEC, Sect. 233d, 1995 Edition	Instrumentation shall be as specified in Sects. 200 and 504. Alarms shall be as specified in Sect. 436 and shall be provided to warn of high fresh water cooling temperature. Alarms shall be located where they are visible, or audible, from the local operating station, and from remote station when engine room may be unmanned.	
131	234	Propulsion Gas Turbines – Change Control	GENSPEC, Sect. 234g, 1995 Edition	The Contractor shall implement and maintain a configuration control program in accordance with DOD-STD-480 for the gas turbine system.	

ITEM NO.	SWBS NO.	SWBS TITLE AND TOPIC	STANDARD	AMPLIFICATION OF STANDARD	REMARKS
132	234	Propulsion Gas Turbines – Controls and Instrumentation	GENSPEC, Sect. 234f, 1995 Edition	The gas turbine controls shall be in accordance with Mil. Spec. MIL-E-17341. Performance of the engine control functions shall be compatible with the propulsion control system. Each propulsion gas turbine shall be capable of being controlled either locally or remotely. Controls shall be arranged so that one man can start, operate, and stop each propulsion gas turbine without leaving the control station. Each propulsion gas turbine engine shall be provided with a mechanical operating device for emergency shutdown of the engine, which can be actuated at a location outside the engine compartment and adjacent to the access. In multiple gas turbine installations each gas turbine shall have its own dedicated engine control system, such that an electrical fault in one engine control system will not impact the operation of remaining gas turbines. Instrumentation, alarms, and safety devices as specified in Mil. Spec. MIL-E-17341 shall be installed for local and remote monitoring and safe operation of the propulsion gas turbine.	
133	234	Propulsion Gas Turbines – Fuel Systems	GENSPEC, Sect. 234d, 1995 Edition	Each gas turbine shall be provided with a separate engine mounted fuel system in accordance with Mil. Spec. MIL-E-17341. The ship's fuel service system shall be in accordance with Sect. 541. An emergency fuel trip valve shall be mounted external to the gas turbine compartment in the ship's fuel service system. Fuel under the conditions listed in this section shall be supplied to each gas turbine fuel system by the ship's fuel service system specified in Sect. 541	

ITEM NO.	SWBS NO.	SWBS TITLE AND TOPIC	STANDARD	AMPLIFICATION OF STANDARD	REMARKS
134	234	Propulsion Gas Turbines - Installation	GENSPEC, Sect. 234b, 1995 Edition	The gas turbine installation shall be provided with a method of cooling which shall satisfactorily protect the engine and engine mounted accessories and components during operation, and after shutdown, based on a maximum inlet cooling air temperature of 125 degrees F. Cooling should be directed uniformly and longitudinally around the engine. Combustion exhaust and air intake systems shall conform to the requirements of Sect. 259. The intake duct shall be designed to meet the aerodynamic performance requirements recommended by the gas turbine manufacturer. The maximum allowable back pressure and pressure drop of the complete combustion exhaust and air intake systems shall be in accordance with the requirements of the gas turbine engine manufacturer. The use of rivets in the gas turbine intakes is prohibited. The intake duct shall also contain a bolted-on inlet screen (as close to the gas turbine inlet as possible) in accordance with Mil. Spec. IL-E-17341. The intake duct shall include an anti-icing system to prevent the formation of ice in the intake. An ice detecting sensor shall be incorporated to permit actuation of the anti-icing system when danger of ice formation exists. For maximum fire prevention, surfaces which could attain a temperature of 400 degrees F or higher, and where impingement of a flammable fluid on these surfaces is a distinct possibility, shall be insulated or shielded unless this would prevent proper functioning of the system or component. The engine compartment shall be equipped with automatic fire detection. Fire alarm signal contacts shall be provided for fire signal uplink to the machinery control system for each engine	

ITEM NO.	SWBS NO.	SWBS TITLE AND TOPIC	STANDARD	AMPLIFICATION OF STANDARD	REMARKS
			GENSPEC, Sect. 234b, 1995 Edition (cont'd)	compartment. Actuation of either the primary or reserve HALON system shall stop the engine and cooling fan (if operating), close all louvers and openings, thus sealing the compartment (except main inlet air supply, exhaust, and eductor) airtight. A temperature sensor shall be placed adjacent to each gas turbine engine compartment entry to indicate compartment internal temperature.	
135	234	Propulsion Gas Turbines – Shock	GENSPEC, Sect. 234i, 1995 Edition	Shock requirements for the systems and components of the gas turbine shall be in accordance with Mil. Spec. MIL-E-17341.	
136	235	Electric Propulsion - General	GENSPEC, Sect. 235h, 1995 Edition	The propulsion equipment and system shall meet the performance requirements specified in this section and Sect. 200. Equipment and associated auxiliaries shall be installed, adjusted, checked, and tested under the supervision and with the assistance of qualified engineers regularly employed by the manufacturer of the propulsion equipment.	
137	235	Electric Propulsion and Central Power Plant - General Requirements	USCG Cutter Certification Plan, Sort #267, December 2000	Specifies requirements for system equipment and design.	
138	251	Forced Draft Systems – Control of Blowers	GENSPEC, Sect. 251c, 1995 Edition	The blower control requirements shall be coordinated with the boiler combustion requirements. Main forced draft blowers shall be controlled individually by a pneumatic system. If automatic control is not specified, a manual pneumatic system shall be installed, wherein the air loading controls shall be located in the firing aisle in such position that the operator can adjust blower speed and fuel flow while simultaneously observing the smoke periscope.	

ITEM NO.	SWBS NO.	SWBS TITLE AND TOPIC	STANDARD	AMPLIFICATION OF STANDARD	REMARKS
			GENSPEC, Sect. 251c, 1995 Edition (cont'd)	Where automatic combustion control is installed, movement of the control lever shall be directly proportional to the automatic combustion control loading signal.	
139	251	Forced Draft Systems – Design	GENSPEC, Sect. 251d, 1995 Edition	The system shall furnish combustion air from weather inlets to the boilers by the most practicable direct path, commensurate with considerations of minimum pressure loss, space, removal of water, and arrangement of adjacent systems and equipment. The requirements in this section shall be considered in designing the air path between the weather and the forced draft blower inlets including materials, connections and restrictions.	
140	251	Forced Draft Systems – Selection of Equipment	GENSPEC, Sect. 251b, 1995 Edition	Turbine-driven vertical or horizontal vane-axial type, Mil. Spec. MIL-F-18602. Motor-driven blowers shall be of the centrifugal type, Mil. Spec. MIL-F-19004. Motor-driven blowers using fluid drive shall be installed with oil cooler and control lever and shall be capable of operating at the specified minimum output speed. Motor-driven fans with variable inlet vane control shall have the specified variable turndown ratio.	
141	251	Forced Draft Systems – Shock	GENSPEC, Sect. 251e, 1995 Edition	The forced draft blowers and combustion air systems and associated components of these systems shall meet grade A shock requirements. The associated components shall include main steam inlet valve, nozzle valves, shutters, and speed controls.	
142	252	Machinery Control Stations - Equipment Enclosures	USCG Cutter Certification Plan, Sort #386, December 2000	Specifies general requirements for construction of enclosures.	

ITEM NO.	SWBS NO.	SWBS TITLE AND TOPIC	STANDARD	AMPLIFICATION OF STANDARD	REMARKS
143	252	Machinery Control Stations - Equipment Enclosures	USCG Cutter Certification Plan, Sort #387, December 2000	Specifies general requirements for construction of enclosures	
144	252	Machinery Control Stations - General	USCG Cutter Certification Plan, Sort #382, December 2000	Mission critical automated/remote machinery control systems shall have emergency manual controls.	
145	252	Machinery Control Stations - General	USCG Cutter Certification Plan, Sort #383, December 2000	Specifies requirements for centralized control and local operating stations.	
146	252	Machinery Control Stations - General	USCG Cutter Certification Plan, Sort #384, December 2000	Specifies requirements for centralized control and local operating stations.	
147	252	Machinery Control Stations - Manual Override	USCG Cutter Certification Plan, Sort #385, December 2000	Specifies general requirements for manual override.	
148	252	Machinery Control Stations – Operation and Control Requirements	SOLAS Part C, Reg. 31.3	Where the main propulsion and associated machinery, including sources of main electric supply, are provided with various degrees of automatic or remote control and are under continuous manual supervision from a control room the arrangements and controls shall be so designed, equipped and installed that the machinery operation will be as safe and effective as if it were under direct supervision; for this purpose regulations 46 to 50 shall apply as appropriate.	

ITEM NO.	SWBS NO.	SWBS TITLE AND TOPIC	STANDARD	AMPLIFICATION OF STANDARD	REMARKS
149	253	Steam Systems – Auxiliary Exhaust Systems	GENSPEC, Sect. 253d, 1995 Edition	The auxiliary exhaust system shall receive steam from non-condensing auxiliaries and shall be in accordance with this section, if applicable.	
150	253	Steam Systems – Auxiliary Steam Systems	GENSPEC, Sect. 253c, 1995 Edition	Supply to machinery or equipment that should operate at constant pressure for maximum efficiency shall be from a source subject to minimum pressure fluctuations. Supply to systems or components for which steam must be readily available in an emergency shall be from a source that is under pressure during all normal operating conditions. This section also provides further specific requirements for 1200, 600, and 150 lb/in^2 auxiliary steam systems, as applicable.	
151	253	Steam Systems – General Requirements	GENSPEC, Sect. 253a, 1995 Edition	Auxiliary steam interfaces for surface ships shall be in accordance with DOD-STD-1399, Section 534. Each branch line supplying steam to auxiliary machinery or equipment from the main or auxiliary steam system shall include a root valve and a control or throttle valve for two-valve isolation of each unit served. Lines serving machinery, equipment, or systems outside machinery spaces shall have a cutout valve in the machinery space. Appropriate gauges and thermometers shall be installed for local observation.	
152	253	Steam Systems – Shock	GENSPEC, Sect. 253j, 1995 Edition	Where applicable, the steam systems and all components shall meet the grades of shock in accordance with this section.	

ITEM NO.	SWBS NO.	SWBS TITLE AND TOPIC	STANDARD	AMPLIFICATION OF STANDARD	REMARKS
153	254	Steam Condensers and Air Ejectors - General	GENSPEC, Sect. 254, 1995 Edition	Condensers that are not part of air ejector assemblies shall comply with Mil. Spec. MIL-C-15430. See Sect. 531 for condensers and air ejectors for distilling plants.	
154	255	Condensate and Feedwater Systems – Condensate Systems	GENSPEC, Sect. 255c, 1995 Edition	A condensate system shall be installed to serve all propulsion plants and condensing auxiliary machinery. Loop seals on the air ejector inter condenser drains shall be filled from their respective condensate pump discharge. Condensate pumps shall be vented to their respective condenser. Vent lines shall rise continuously from the pump. A cutout valve shall be installed in the vent lines for main condensate pumps only.	
155	255	Condensate and Feedwater Systems - General	GENSPEC, Sect. 255a, 1995 Edition	For piping materials and general requirements applicable to all piping systems, see Sect. 505.	
156	256	Machinery Seawater Circulating Water and Cooling Water Systems - General	GENSPEC, Sect. 256a, 1995 Edition	This section contains requirements for machinery seawater circulating and seawater cooling systems, and specified services for surface ships. The total number of inlet seawater thermometers within a space shall be the minimum number required indicating seawater inlet temperature during all machinery operating conditions. Thermometers shall be installed downstream of each seawater cooled heat exchanger. Each seawater cooling pump shall be provided with a pressure gage and cutout valve in the associated suction and discharge. In addition, a check valve shall be provided in the discharge piping for each pump, immediately upstream of the discharge cutout valve.	

ITEM NO.	SWBS NO.	SWBS TITLE AND TOPIC	STANDARD	AMPLIFICATION OF STANDARD	REMARKS
			GENSPEC, Sect. 256a, 1995 Edition (cont'd)	Overboard discharges from equipment located in the same watertight subdivision shall be combined where practicable to minimize the number of hull penetrations. Overboard discharge fittings shall be located at least one foot below the light ship design waterline, unless otherwise specified. Unless otherwise specified, heat exchangers shall be provided with inlet cutout valve and pressure gage, and an outlet thermometer, pressure gage, and throttling valve. Where an orifice is required, it shall be installed downstream of the heat exchanger and associated discharge throttling valve. System piping shall be designed so that, in all operating conditions, each service receives the required seawater flow, and seawater velocities throughout the system are within the maximum and minimum allowable values specified in Sect. 505. Flexible hose, where used, shall be 1 nps larger than the nominal size of the associated pipe connection. See Sect. 505 for additional flexible hose requirements.	
157	256	Machinery Seawater Circulating Water and Cooling Water Systems – General Requirements	ABS 4-6-5/7.1.1	Provisions of 4-6-5/7 apply to cooling systems of diesel engines and gas turbines and their associated reduction gears, as applicable, intended for propulsion and electric power generation.	
158	256	Machinery Seawater Circulating Water and Cooling Water Systems – General Requirements	ABS 4-6-5/7.1.2	The requirements for cooling systems are intended to provide for continuity of supply of cooling medium, through providing redundancy in the system, to the propulsion and auxiliary machinery.	

ITEM NO.	SWBS NO.	SWBS TITLE AND TOPIC	STANDARD	AMPLIFICATION OF STANDARD	REMARKS
159	256	Machinery Seawater Circulating Water and Cooling Water Systems – System Component Certification	ABS 4-6-5/7.3	Cooling water pumps, coolers and pipe fitting and joints are to be certified, as required, in accordance with 4-6-5/7.3.1 through 4-6-5/7.3.3 of this section	
160	256	Machinery Seawater Circulating Water and Cooling Water Systems – Pumps	ABS 4-6-5/7.7.1	There are to be at least two means to supply cooling water or other medium to propulsion and auxiliary engines, air compressors, coolers, reduction gears, etc. The capacity of each means is to be sufficient for continuous operation of the propulsion unit and its essential auxiliary services at rated power. One of these means is to be independently driven and may consists of a connection from a suitable pump of adequate size normally used for other purposes, such as general service pump, or in the case of fresh water cooling one of the vessel's fresh water pumps. Where the cooling pump is attached to and driven by the engine, and the connection to an independently driven pump is impracticable, the standby pump will not be required if a complete duplicate of the attached pump is carried on board as a spare. This alternative, however, is only permitted for multiple-engine installations where one of the engines may be inoperable, while its pump is being changed, without completely disrupting the propulsion capability of the vessel.	
161	256	Machinery Seawater Circulating Water and Cooling Water Systems – Strainers	ABS 4-6-5/7.7.2	Where seawater is used for direct cooling of the engines, suitable strainers are to be fitted between the sea valve and the pump suction. The strainers are to be either of the duplex type or arranged such that they can be cleaned without interrupting the cooling water supply. This applies also to engines fitted with indirect cooling, where direct seawater cooling is used as an emergency means of cooling.	

ITEM NO.	SWBS NO.	SWBS TITLE AND TOPIC	STANDARD	AMPLIFICATION OF STANDARD	REMARKS
162	256	Machinery Seawater Circulating Water and Cooling Water Systems – Cooling Medium Circulation	ABS 4-6-5/7.7.3	In general means are to be provided to indicate proper circulation of cooling medium. This may be accomplished by means of pressure or flow and temperature indicators. For diesel engines, primary cooling medium is to be provided with pressure indicator at inlet and with temperature indicator at the outlet.	
163	256	Machinery Seawater Circulating Water and Cooling Water Systems – Over-Pressure Protection	ABS 4-6-5/7.7.4	The cooling water system and all jackets are to be protected against over-pressurization in accordance with 4-6-2/9.9.	
164	256	Machinery Seawater Circulating Water and Cooling Water Systems – System Monitoring and Safety Functions	ABS 4-6-5/7.7.5	For propulsion machinery spaces intended for centralized or unattended operations (ACC/ACCU notation), alarms for abnormal conditions (pressure and temperature) of the cooling media and automatic safety system functions are to be provided. See e.g., 4-9-4/Table 3A, 4-9-4/Table 3B and 4-9-4/Table 5 for propulsion engines and 4-9-4/Table 8 for generator engines.	
165	256	Machinery Seawater Circulating Water and Cooling Water Systems – Testing and Trials	ABS 4-6-5/7.9	Hydrostatic tests are to be in accordance with 4-6-2/7.3.1 and 4-6-2/7.3.3. The system is to be tried under working condition in the presence of a Surveyor.	
166	256	Machinery Seawater Circulating Water and Cooling Water Systems – Propulsion Internal Combustion Engine Cooling Water System	GENSPEC, Sect. 256b, 1995 Edition	Each engine shall be provided with a primary source of seawater via either an attached pump or an electric motor driven pump, as well as a fully redundant, standby, electric motor driven, cooling pump.	
167	256	Machinery Seawater Circulating Water and Cooling Water Systems – Auxiliary Machinery Seawater Cooling System	GENSPEC, Sect. 256c, 1995 Edition	An auxiliary seawater service system shall be provided to supply cooling water to auxiliary machinery located in main and auxiliary machinery spaces requiring seawater cooling.	

ITEM NO.	SWBS NO.	SWBS TITLE AND TOPIC	STANDARD	AMPLIFICATION OF STANDARD	REMARKS
168	256	Machinery Seawater Circulating Water and Cooling Water Systems – Ship Service and Emergency Diesel Generator Seawater Cooling System	GENSPEC, Sect. 256d, 1995 Edition	Each ship service and emergency diesel generator shall be provided with a separate dedicated seawater cooling system located in the same space as the associated generator. Each system shall include either an independent sea chest or a pair of cross-connected sea chests located port and starboard, an attached or electric motor-driven circulating pump, a duplex strainer, valves and controls. An emergency source of cooling water from the firemain shall be provided for each diesel generator seawater cooling system.	
169	256	Machinery Seawater Circulating Water and Cooling Water Systems – Shock	GENSPEC, Sect. 256h, 1995 Edition	Equipment and components of seawater cooling systems for combatant ships and selected auxiliary ships shall meet grade A shock, except that branch connections serving only lower grade equipment shall be grade B downstream of the branch root valve.	
170	256	Machinery Seawater Cooling Systems – Erosion/Corrosion Prevention	USCG Cutter Certification Plan, Sort #390-391, December 2000	Specifies requirements concerning erosion/corrosion.	
171	256	Machinery Seawater Cooling Systems – Erosion/Corrosion Prevention	USCG Cutter Certification Plan, Sort #392, December 2000	Specifies requirements concerning galvanic corrosion.	
172	256	Machinery Seawater Cooling Systems – Erosion/Corrosion Prevention Analysis	USCG Cutter Certification Plan, Sort #393, December 2000	A computer flow analysis of multiple worst case conditions is required.	

ITEM NO.	SWBS NO.	SWBS TITLE AND TOPIC	STANDARD	AMPLIFICATION OF STANDARD	REMARKS
173	256	Machinery Seawater Cooling Systems – Plate Heat Exchangers	USCG Cutter Certification Plan, Sort #389, December 2000	Titanium plate material is required.	
174	256	Machinery Seawater Cooling Systems – Reliability	USCG Cutter Certification Plan, Sort #394, December 2000	Redundant sources of cooling water (e.g., multiple pumps, firemain backup, etc.) are required.	
175	256	Machinery Seawater Cooling Systems – Shell and Tube Heat Exchangers	USCG Cutter Certification Plan, Sort #388, December 2000	Specifies requirements for heat exchangers.	
176	256	Machinery Seawater Cooling Systems –Reliability	USCG Cutter Certification Plan, Sort #395, December 2000	Specifies requirements for circulating water pumps.	
177	259	Air Intake and Exhaust Systems – Alarms	ABS 4-6-5/11.9.2	Propulsion machinery spaces intended for centralized or unattended operations (ACC/ACCU notation) are to be provided with alarms for high exhaust gas temperature in the centralized control station.	
178	259	Air Intake and Exhaust Systems – Arrangements - Wet Exhaust	USCG Cutter Certification Plan, Sort #417, December 2000	Drains are to be provided in exhaust system where water might collect.	
179	259	Air Intake and Exhaust Systems – Arrangements - High Speed Craft	USCG Cutter Certification Plan, Sort #418, December 2000	Drains are to be provided in exhaust system where water might collect.	

ITEM NO.	SWBS NO.	SWBS TITLE AND TOPIC	STANDARD	AMPLIFICATION OF STANDARD	REMARKS
180	259	Air Intake and Exhaust Systems – Certifications	USCG Cutter Certification Plan, Sort #414, December 2000	Their manufacturers shall certify expansion joints and exhaust silencers gas-tight.	
181	259	Air Intake and Exhaust Systems – Combustion Air System	GENSPEC, Sect. 259c, 1995 Edition	Each unit of installed equipment requiring combustion air shall have a separate system ducting the air from the weather directly to the engine. Engine enclosure/module cooling air shall be provided from the weather. The cooling air system shall be designed to meet the engine requirements of Sect. 233, 234, 310, or 502. Gas turbine enclosure/module cooling air systems shall incorporate a moisture separator as specified herein. The cooling air shall be supplied by fan(s) or exhaust eductor/fan systems. For dual fan or exhaust eductor/fan systems, a damper shall be installed in each flow path to prevent back flow through an idle fan or duct. The system shall be designed to prevent the collapse of the ducting due to blockage of the weather inlet or air filter. An alternate air supply shall be provided to permit continued uninterrupted operation of the engine in the event of blockage in the combustion air system. The combustion air weather intake shall be of the self-draining air lift type, or equal. The net air velocity through intake louvers and air lifts shall not exceed 1,000 ft/min. Applicable requirements for ventilation ducts as specified in Sect. 512 shall apply, except that 1/2-inch mesh screen shall be installed in weather intake openings.	

ITEM NO.	SWBS NO.	SWBS TITLE AND TOPIC	STANDARD	AMPLIFICATION OF STANDARD	REMARKS
182	259	Air Intake and Exhaust Systems – Combustion Air Systems	USCG Cutter Certification Plan, Sort #398, December 2000	Specifies requirements for combustion air systems.	
183	259	Air Intake and Exhaust Systems – Diesel Engine Exhaust Silencers	USCG Cutter Certification Plan, Sort #403, December 2000	Dry type spark-arresting marine units with soot collectors shall be provided. Exhaust silencers shall provide noise attenuation of at least 15 dB over the octave band center frequency range of 63 to 8000 hertz.	
184	259	Air Intake and Exhaust Systems – Drains - Wet Exhaust	USCG Cutter Certification Plan, Sort #409, December 2000	Exhaust piping requirements are addressed.	
185	259	Air Intake and Exhaust Systems – Engine Installations	CFR, Title 46, Sec. 58.10-5, October 2000	Exhaust pipe installations shall conform to the requirements of the American Boat and Yacht Council Standard P-1 ``Safe Installation for Exhaust Systems" and National Fire Protection Association Standard NFPA 302, part 1, section 23 All exhaust installations with pressures in excess of 15 pounds per square inch gage or employing runs passing through living or working spaces shall meet the material requirements of part 56 of this subchapter. Horizontal dry exhaust pipes are permitted only if they do not pass through living or berthing spaces, they terminate above the deepest load waterline and are so arranged as to prevent entry of cold water from rough or boarding seas, and they are constructed of corrosion resisting material ``at the hull penetration."	

ITEM NO.	SWBS NO.	SWBS TITLE AND TOPIC	STANDARD	AMPLIFICATION OF STANDARD	REMARKS
186	259	Air Intake and Exhaust Systems – Exhaust Expansion Joints	USCG Cutter Certification Plan, Sort #415, December 2000	Specifies requirements for circular metal bellows type expansion joints.	
187	259	Air Intake and Exhaust Systems – Exhaust Expansion Joints	USCG Cutter Certification Plan, Sort #416, December 2000	See USCG Marine Engineering section; piping and pressure vessels.	
188	259	Air Intake and Exhaust Systems – Exhaust Gas Cooling	CFR, Title 46, Sec. 119-425, October 2000	Except as otherwise provided in this paragraph, all engine exhaust pipes must be water cooled. The exhaust pipe cooling water system must comply with the requirements of this paragraph. Engine exhaust cooling systems built in accordance with the requirements of American Boat and Yacht Council (ABYC) P-1, ``Installation of Exhaust Systems for Propulsion and Auxiliary Engines," will be considered as meeting the requirements of this section.	
189	259	Air Intake and Exhaust Systems – Exhaust Materials	USCG Cutter Certification Plan, Sort #407, December 2000	Grades 316L, 321 and 347 stainless steel is to be used, with 316L limited to maximum temperature of 750F. For Guidance: Materials are to be in accordance with ASTM A666-1998 and ASTM A376-1998.	
190	259	Air Intake and Exhaust Systems – Exhaust Pipe Installation	CFR, Title 46, Sec. 119-430, October 2000	The design of all exhaust systems must ensure minimum risk of injury to personnel. Protection must be provided in compliance with Sec. 116.970 of this chapter at such locations where persons or equipment might come in contact with an exhaust pipe. The exhaust piping must be so arranged as to prevent backflow of	

ITEM NO.	SWBS NO.	SWBS TITLE AND TOPIC	STANDARD	AMPLIFICATION OF STANDARD	REMARKS
			CFR, Title 46, Sec. 119-430, October 2000 (cont'd)	water from reaching engine exhaust ports under normal conditions. Pipes used for wet exhaust lines must be at least Schedule 80 or corrosion resistant material and adequately protected from mechanical damage. An exhaust installation subject to pressures in excess of 105 kPa (15 psig) or having exhaust pipes passing through living or working spaces must meet the material requirements of part 56 of subchapter F (Marine Engineering) of this chapter. Engine exhaust installations built in accordance with the requirements of ABYC P-1 will be considered as meeting the requirements of this section.	
191	259	Air Intake and Exhaust Systems – Exhaust System	GENSPEC, Sect. 259d, 1995 Edition	Each unit of installed equipment requiring disposal of combustion gases shall have a separate system, which ducts the gases directly to the weather. Thermal/acoustic treatment shall be in accordance with Sect. 073. Where a diesel engine exhausts out the side of a ship, a water trap, drawing, NAVSHIPS No. 810-1385887 and a gate valve, locking type, classified "W", shall be installed inboard and adjacent to the hull.	
192	259	Air Intake and Exhaust Systems – Exhaust Systems	CFR, Title 46, Sec. 128.320, October 2000	No diesel engine exhaust system need meet the material requirements in Sec. 58.10-5(d)(1)(i) of this chapter if the installation is certified as required by Sec. 128.220(c) of this part.	

ITEM NO.	SWBS NO.	SWBS TITLE AND TOPIC	STANDARD	AMPLIFICATION OF STANDARD	REMARKS
193	259	Air Intake and Exhaust Systems – Exhaust Systems	USCG Cutter Certification Plan, Sort #399, December 2000	Each diesel tailpipe shall be arranged to reduce rain and snow entry. For guidance, typical arrangement is with exhaust directed aft, upward and slightly outboard with tailpipe cut vertical. Diesel and incinerator exhausts directed to reduce soot on weather decks. Boiler exhausts shall be fitted with back draft terminals. Wet exhaust systems shall not be used except for high-speed craft.	
194	259	Air Intake and Exhaust Systems – Exhaust Systems	USCG Cutter Certification Plan, Sort #400, December 2000	Specifies water trap requirements for diesel exhaust systems.	
195	259	Air Intake and Exhaust Systems – Exhaust Systems	USCG Cutter Certification Plan, Sort #401-402, December 2000	Specifies exhaust system requirements.	
196	259	Air Intake and Exhaust Systems – Fittings	USCG Cutter Certification Plan, Sort #412, December 2000	Specifies requirements for indicators.	
197	259	Air Intake and Exhaust Systems – Fittings	USCG Cutter Certification Plan, Sort #413, December 2000	Gauges and other fittings shall be provided to permit temperature, smoke, and back pressure analysis.	
198	259	Air Intake and Exhaust Systems – General	GENSPEC, Sect. 259b, 1995 Edition	The systems shall be designed and supported to prevent stress loading of the flexible connections and expansion joints. The design shall also minimize the transfer of vibration to the	

ITEM NO.	SWBS NO.	SWBS TITLE AND TOPIC	STANDARD	AMPLIFICATION OF STANDARD	REMARKS
			GENSPEC, Sect. 259b, 1995 Edition (cont'd)	supporting structure and withstand stresses induced by weight, thermal expansion, engine vibration, working of the ship, and pressure thrust caused by the exhaust gas and intake air. Welding shall be used wherever practicable. Flexible metal hose or expansion joints shall be used at the engine air intakes and expansion joints shall be used at the exhaust outlets and elsewhere as required for flexibility. The systems, including air filters, moisture separators, intake silencers, exhaust mufflers, water traps and valves shall not impose a pressure drop or back pressure which will exceed the acceptable values as specified in the engine specifications. (See Sect. 233, 234, 310 or 502.) Air and gas passages shall be airtight. The systems shall be provided with drains at the low points. Collected drainage shall be led overboard, if possible, or connected to a drain system (Sect. 528).	
199	259	Air Intake and Exhaust Systems – Installation	ABS 4-6-5/11.7	Exhaust pipes are to be adequately supported and fitted with means to take account of the expansion and contraction to prevent excessive strain on the pipes. Expansion joints or equivalent may be used.	
200	259	Air Intake and Exhaust Systems - Insulation	ABS 4-6-5/11.3	Exhaust pipes are to be water-jacketed or effectively insulated. In places where oil spray or leakage can occur, the insulation material is not to be of oil-absorbing type unless encased in metal sheets or equivalent.	

ITEM NO.	SWBS NO.	SWBS TITLE AND TOPIC	STANDARD	AMPLIFICATION OF STANDARD	REMARKS
201	259	Air Intake and Exhaust Systems – Intake Filters	USCG Cutter Certification Plan, Sort #405, December 2000	Diesel engines to have dry type particulate filters meeting engine manufacturers' requirements. Combination filter-silencers provided as necessary to meet SWBS 073.	
202	259	Air Intake and Exhaust Systems – Intake Materials	USCG Cutter Certification Plan, Sort #406, December 2000	Specifies use of galvanized steel or aluminum ducting per SWBS 512.	
203	259	Air Intake and Exhaust Systems – Intake System Flanges	USCG Cutter Certification Plan, Sort #411, December 2000	Sheet steel and structural angles with bolting similar to HVAC systems are to be used.	
204	259	Air Intake and Exhaust Systems - Interconnections	ABS 4-6-5/11.5	Exhaust pipes of several engines are not to be connected together, but are to be run separately to the atmosphere unless arranged to prevent the return of gases from an idle engine. Boiler uptakes and engine exhaust lines are not to be connected except when specially approved as in cases where the boilers are arranged to utilize the waste heat from the engines.	
205	259	Air Intake and Exhaust Systems – Material	GENSPEC, Sect. 259e, 1995 Edition	Exhaust ducting material shall be in accordance with MIL-STD-777. Ducting material for combustion air systems shall be the same as for ventilation ducts (see Sect. 512). Diesel engine intake air filters shall be in accordance with Mil. Spec. MIL-F-7194, type II. For lagging and insulation, see Sect. 508.	

ITEM NO.	SWBS NO.	SWBS TITLE AND TOPIC	STANDARD	AMPLIFICATION OF STANDARD	REMARKS
206	259	Air Intake and Exhaust Systems – Materials - Wet Exhaust	USCG Cutter Certification Plan, Sort #408, December 2000	Grade 316L stainless steel, grade 5086 aluminum or Fiber reinforced plastic (FRP) is permitted. Material selection shall be suitable in the event of loss of cooling water.	
207	259	Air Intake and Exhaust Systems – Shock	GENSPEC, Sect. 259g, 1995 Edition	The combustion air and exhaust systems shall meet grade A shock requirements.	
208	259	Air Intake and Exhaust Systems – System Pressure Drop	USCG Cutter Certification Plan, Sort #396, December 2000	System pressure drop must meet combustion equipment manufacturer's requirements.	
209	259	Air Intake and Exhaust Systems – Weather Intakes	USCG Cutter Certification Plan, Sort #397, December 2000	Weather openings fitted with 1/2 inch mesh screening, except that 1 1/2 inch mesh screens to be used for gas turbine openings. Weather opening air velocity not to exceed 1500 fpm, except that 2000 fpm maximum is permitted for gas turbine engines. Each piece of equipment to have separate independent weather air intake. High speed craft are permitted to take combustion air from within the machinery space.	
210	259	Internal Combustion Engine, Combustion Air, and Exhaust Systems – Flanges, General	USCG Cutter Certification Plan, Sort #410, December 2000	Combustion equipment connections, filters, silencers, and expansion joints shall have flanged pipe connections. Flange bolt drilling shall be to ASNI standards.	
211	300	Electric Plant General - Equipment Grounding and Bonding Techniques	USCG Cutter Certification Plan, Sort #438, December 2000	Specifies bonding, grounding and other techniques for controlling EMI, ensuring electromagnetic compatibility and personnel safety.	

ITEM NO.	SWBS NO.	SWBS TITLE AND TOPIC	STANDARD	AMPLIFICATION OF STANDARD	REMARKS
212	300	Electric Plant General - Ground Detection	USCG Cutter Certification Plan, Sort #439, December 2000	A rated voltage automatic insulation resistance test, monitoring and alarm system shall be installed for each main and ship service generator and for each vital motor load.	
213	300	Electric Plant General - Power Quality	USCG Cutter Certification Plan, Sort #436, December 2000	Ship service power generation and distribution systems are required to maintain the system characteristics of Type 1 power for all electric plant loading conditions. User equipment is required to be selected to operate on the Type I power as specified.	
214	300	Electric Plant General - Rating of Electrical Equipment and Machinery	USCG Cutter Certification Plan, Sort #437, December 2000	Specifies for rating electric equipment and machinery. The following ambient temperatures are considered standard: 40° C - For installation where the maximum normal operating temperature of the surrounding atmosphere or other cooling medium is 40 ° C or less; in general, to be used for compartments other than machinery spaces. 50° C - For installation where the maximum normal operating temperature of the surrounding atmosphere or other cooling medium is 50 ° C or less but more than 40 ° C; in general to be used for machinery spaces. 70° C - For installation where the maximum normal operating temperature of the surrounding atmosphere or other cooling medium is 70 ° C or less but more than 50 ° C; in general, to be used in upper levels of machinery spaces.	
215	300	Electric Plant General - Ship Service Electric Plant Design	USCG Cutter Certification Plan, Sort #423, December 2000	Specifies requirements for the design of electrical systems and the design and selection of equipment within the complete electrical plant. This standard compliments the plant and equipment requirements found in 46 CFR Subchapter J, and are to be applied to all electrical system and equipment requirements. All referenced standards identified on pages 5-8 shall apply in their entirety.	

ITEM NO.	SWBS NO.	SWBS TITLE AND TOPIC	STANDARD	AMPLIFICATION OF STANDARD	REMARKS
216	300	Electric Plant General - Ship Service Electric Plant Design	USCG Cutter Certification Plan, Sort #424, December 2000	Specifies requirements for the design of electrical systems. This standard compliments the plant and equipment requirements found in IEEE-45.	
217	300	Electric Plant General - Ship Service Electric Plant Design	USCG Cutter Certification Plan, Sort #425, December 2000	46 CFR Subchapter J and IEEE-STD-45 apply to all 300 SWBS sections and the requirements contained in 46 CFR Subchapter J take precedent over the requirements contained in IEEE-STD-45 unless otherwise noted.	
218	300	Electric Plant General - Ship Service Electric Plant Design	USCG Cutter Certification Plan, Sort #426, December 2000	The electrical plant shall be ungrounded except as required for ground detectors, instrument grounds, equipment frame grounds, personnel protection, or other special grounding requirements	
219	300	Electric Plant General - Ship Service Electric Plant Design	USCG Cutter Certification Plan, Sort #427, December 2000	Any equipment that requires grounding, either solidly or by means of capacitors, shall be isolated through transformers.	
220	300	General Requirements for Electric Plant	GENSPEC, Sect. 300b, 1995 Edition	Continuity of the electric power supply shall be the primary aim of the power system design. The number, size, and location (see Sect. 072) of generators, switchboards, and other electric machinery and equipment, the type of electric distribution system to be installed, and the provision of suitable methods for isolating damaged sections of the system shall be determined on the basis of continuity of service, allowance for future growth, simplicity, and minimum space and weight requirements. The ship service and special plants shall be designed for split plant and parallel operation. Electric distribution systems shall be ungrounded except as otherwise required.	

ITEM NO.	SWBS NO.	SWBS TITLE AND TOPIC	STANDARD	AMPLIFICATION OF STANDARD	REMARKS
			GENSPEC, Sect. 300b, 1995 Edition (cont'd)	Electric machinery shall be selected for the highest operating efficiency that is commensurate with reliability, duty cycle, and requirements of minimum size and weight.	
221	300	General Requirements for Electric Plant - Enclosures	ABS 4-8-3/1.11	Electrical equipment is to have a degree of enclosure for protection against the intrusion of foreign objects and liquids appropriate for the location in which it is installed. The minimum degree of protection is to be in accordance with 4-8-3/Table 2. For the purpose of defining protection levels used in 4-8-3/Table 2, the following conventions apply. The degree of protection by an enclosure with respect to the intrusion of foreign particles and water is defined by the designation 'IP' followed by two digits: the first digit signifies the protection degree against particles, and the second digit signifies the protection degree against water. For complete details, see 4-8-3/Table 1A and 4-8-3/Table 1B. These designations are identical to that specified in IEC Publication 60529.	
222	300	General Requirements for Electric Plant - Enclosures	CFR, Title 46, Sec. 111.01-9, October 2000	Degrees of protection – (a) Interior electrical equipment exposed to dripping liquids or falling solid particles must be manufactured to at least NEMA 250 Type 2 or IEC IP 22 degree of protection as appropriate for the service intended. (b) Electrical equipment in locations requiring exceptional degrees of protection as defined in Sec. 110.15-1 of this chapter must be enclosed to meet at least the minimum degrees of protection in ABS Rules for Building and Classing Steel Vessels, table 4/5B.1, or appropriate NEMA 250 Type for the service intended. Each enclosure must be designed in such a way that the total rated temperature of the equipment inside the enclosure is not exceeded. (c) Central control consoles and similar control enclosures must	

ITEM NO.	SWBS NO.	SWBS TITLE AND TOPIC	STANDARD	AMPLIFICATION OF STANDARD	REMARKS
			CFR, Title 46, Sec. 111.01-9, October 2000 (cont'd)	be manufactured to at least NEMA 250 Type 2 or IEC IP 22 degree of protection regardless of location. (d) Equipment for interior locations not requiring exceptional degrees of protection must be manufactured to at least NEMA 250 Type 1 with dripshield or IEC IP 11. *Note to Sec. 111.01-9: The degrees of protection specified in this section are described in NEMA Standards Publication No. 250 and IEC IP Code 529 and designated in ABS Rules for Building and Classing Steel Vessels, table 4/5B.1.*	
223	300	General Requirements for Electric Plant - Enclosures	IEEE Std 45 Clause 1.10	Equipment enclosures of the types defined in 3.7 (except for explosion-proof enclosures), should be manufactured and tested in accordance with the requirements of ANSI/NEMA 250-1991 or IEC 60529: 1989.	
224	300	General Requirements for Electric Plant – Environmental Requirements	GENSPEC, Sect. 300d, 1995 Edition	Specifies ambient temperatures for rating electric equipment and machinery.	
225	300	General Requirements for Electric Plant – Installation	GENSPEC, Sect. 300g, 1995 Edition	Prior to shipboard installation, electric equipment shall be subjected to a careful examination to determine whether the equipment or its insulation has been cut, bruised, or otherwise damaged as a result of handling or storage, whether any small parts have been bent, broken, or lost, or whether the equipment has been damaged by weather, dirt, moisture, lubricating oil, or other deleterious substances.	
226	300	General Requirements for Electric Plant – Insulation Resistance	GENSPEC, Sect. 300h, 1995 Edition	Insulation resistances, corrected to 25 degrees C, shall be not less than the given values.	

ITEM NO.	SWBS NO.	SWBS TITLE AND TOPIC	STANDARD	AMPLIFICATION OF STANDARD	REMARKS
227	300	General Requirements for Electric Plant - Microprocessors	ABS 4-9-6/7 (cont.)	Alarms are to be clearly distinguishable from other information and are to be visually and audibly presented with priority over other information regardless of the mode the computer or the visual display unit is in. All computer hardware for monitoring, control and safety systems of propulsion machinery, propulsion boilers and vital auxiliary pumps are to be qualified in accordance with Section 4-9-7 except for printer, data recording, logging device, or similar.	
228	300	General Requirements for Electric Plant - Shipboard Environmental Requirements	ABS 4-1-1/7	Construction survey notification - Before proceeding with the manufacture of machinery requiring test and inspection, the Bureau is to be notified that survey is desired during construction. Such notice is to contain all the necessary information for the identification of the items to be surveyed. Machinery equations - The equations for rotating parts of the machinery in Part 4 of the Rules are based upon strength considerations only and their application does not relieve the manufacturer from responsibility for the presence of dangerous vibrations and other considerations in the installation at speeds within the operating range. Cold ship start - ''Cold ship'' condition is the condition where the entire machinery installation, including the power supply, is out of operation and that auxiliary services such as compressed air, starting current from batteries, etc. for bringing propulsion machinery into operation and for restoration of the main power supply are not available. Means are to be provided so that machinery can be brought into operation from a cold ship condition using only the facilities available on board. Details of cold ship start arrangements are to be demonstrated to the satisfaction of the Surveyor.	

ITEM NO.	SWBS NO.	SWBS TITLE AND TOPIC	STANDARD	AMPLIFICATION OF STANDARD	REMARKS
229	300	General Requirements for Electric Plant - Shipboard Environmental Requirements	CFR, Title 46, Sec. 111.01-15/19, October 2000	(a) In this subchapter, an ambient temperature of 40°C is assumed except as otherwise stated. (b) A 50°C ambient temperature is assumed for all rotating electrical machinery in boiler rooms, engine rooms, auxiliary machinery rooms, and weather decks. (c) A 45°C ambient temperature is assumed for cable and all other non-rotating electrical equipment in boiler rooms, in engine rooms, in auxiliary machinery rooms, and on weather decks. For installations using UL 489 SA marine type circuit breakers the ambient temperature for that component is assumed to be 40°C. For installations using Navy type circuit breakers the ambient temperature for that component is assumed to be 50°C. (d) Unless otherwise indicated in this subchapter, a 55°C ambient temperature is assumed for all control and instrumentation equipment. (e) If electrical equipment is utilized in a space in which the equipment's rated ambient temperature is below the assumed ambient temperature of the space, its load must be derated. The assumed ambient temperature of the space plus the equipment's actual temperature rise at its derated load must not exceed the equipment's total rated temperature (equipment's rated ambient temperature plus its rated temperature rise). Refer to Steady State Performance 46CFR111.01-17. All electrical equipment must be designed and installed to operate for the particular location and environment in which it is to be used. Additionally, electrical equipment necessary for the maneuvering, navigation, and safety of the vessel or its personnel must be designed and installed to operate under any combination of the following conditions: (1) 15° static list, 22.5° dynamic roll; and (2) 7.5° static trim. (b) All emergency installations must be designed and installed to operate when the vessel is at 22.5° list and 10° trim.	

ITEM NO.	SWBS NO.	SWBS TITLE AND TOPIC	STANDARD	AMPLIFICATION OF STANDARD	REMARKS
230	300	General Requirements for Electric Plant - Shipboard Environmental Requirements	IEEE Std 45 Clause 1.6	Systems and equipment should be suitable for continuous operation in the following normal conditions of shipboard service: a) Continuous exposure to severe moisture- and salt-laden atmosphere, high wind velocity, and ice formation encountered at sea. b) Average ambient temperature values of 40 °C (104 °F) in accommodation areas, and similar spaces; 45 °C (113 °F) in main and auxiliary machinery spaces; 50 °C (122 °F) for rotating machinery and propulsion equipment in main and auxiliary machinery spaces containing significant heat sources such as prime movers and boilers; 65 °C (149 °F) in the uptakes of machinery spaces containing prime movers and boilers; all at relative humidity up to 95%. The design value for seawater cooling temperature should be 32 °C (89.6 °F). c) Roll and pitch of a vessel underway shall be : - A pitch and roll of 45° should not affect the operation of the switchgear. - A pitch of 10 degrees and a roll of 22.5° should not affect the operation of the emergency equipment. - A dynamic roll of 22.5° or a static roll of 15° should not affect the operation of the ship service equipment. - A dynamic pitch of 7.5° or a static pitch of 5° should not affect the operation of the ship service equipment. d) Vibration of a vessel underway: Electrical equipment should be constructed to withstand at least the following: 1) Vibration frequency range of 5–50 Hz with a velocity amplitude of 20 mm/s. 2) Peak accelerations due to ship motion in a seaway of ±0.6 g for ships exceeding 90 m in length, and ±1.0 g for smaller ships, with duration of 5 to 10 seconds.	
231	300	General Requirements for Electric Plant - Shipboard Tests	ABS 4-8-4/29	Generators - Each generator is to be operated for a time sufficient to show satisfactory operation, individually and in parallel, and with all possible load combinations.	

ITEM NO.	SWBS NO.	SWBS TITLE AND TOPIC	STANDARD	AMPLIFICATION OF STANDARD	REMARKS
			ABS 4-8-4/29 (cont'd)	Switchboards - Generator protective devices e.g., over load protection, reverse power protection, under voltage protection, preferential trip, and auxiliary motor sequential starting, as applicable are to be tested. Motors - Each motor is to be operated for a time sufficient to show satisfactory performance at such load as can readily be obtained. Voltage drop measurement - Voltage drop along power and lighting cables is to be measured. Voltage drop at any part of the installation is not to exceed the limits specified in 4-8-2/7.7.1(d). Insulation resistance measurements - Insulation resistance of power and lighting cables is to be measured. Appliances connected to the circuits may be disconnected for this test.	
232	300	General Requirements for Electric Plant - Shipboard Tests	CFR, Title 46, Sec. 110.30, October 2000	Initial inspection - The initial inspection, which may be a series of inspections during the construction of the vessel, includes a complete inspection of the electric installation and electric equipment or apparatus. The inspection is to determine that the arrangement, materials, and their installations meet this chapter and the approved plans. The inspection also is to determine that the workmanship of all equipment and apparatus and the installation is satisfactory.	
233	300	General Requirements for Electric Plant - Shipboard Tests	IEEE Std 45 Clause 38	After the electric installation is complete and before the vessel proceeds on sea trials, the entire electric plant should be thoroughly inspected and tested. Tests are intended to determine general equipment condition and to ensure that the installation of electrical systems and equipment is in a satisfactory and acceptable state at the time of completion. These tests should be in addition to, and not as a substitute for, the tests of individual	

ITEM NO.	SWBS NO.	SWBS TITLE AND TOPIC	STANDARD	AMPLIFICATION OF STANDARD	REMARKS
			IEEE Std 45 Clause 38 (cont'd)	equipment items at the manufacturer's facility. Satisfactory test results, while providing worthwhile information on general equipment condition, do not always ensure that any particular installation is satisfactory in all respects.	
234	300	General Requirements for Electric Plant - Steady State Performance	ABS 4-8-3/13	Certified safe equipment is equipment intended for installation in hazardous areas where flammable or explosive gases, vapors, or dust are normally or likely to be present. The equipment is to be type-tested and certified by a competent, independent testing laboratory for complying with IEC Publication 60079 or equivalent standard, and rated according to its enclosure and the types of flammable atmosphere in which it is safe to install. If desired, the manufacturer may have such equipment type approved (see 4-1-1/3.3).	
235	300	General Requirements for Electric Plant - Steady State Performance	CFR, Title 46, Sec. 111.01-17, October 2000	Unless otherwise stated, electrical equipment must function at variations of at least ±5 percent of rated frequency and +6 percent to -10 percent of rated voltage. This limitation does not address transient conditions.	
236	300	General Requirements for Electric Plant - Steady State Performance	IEEE Std 45 Clause 4.5	Power distribution systems should maintain the system characteristics described in Table 4-1 under all operating conditions. Power-consuming equipment should operate satisfactorily under the conditions described in Table 4-1, and should be designed to withstand the power interruption, transient, EMI, RFI, and insulation resistance test conditions inherent in the system. Power-consuming equipment requiring a non-standard voltage or frequency for successful operation should have integral power conversion capability. Power-consuming equipment should not have inherent characteristics that degrade the power quality of the supply system described in Table 4-1.	

ITEM NO.	SWBS NO.	SWBS TITLE AND TOPIC	STANDARD	AMPLIFICATION OF STANDARD	REMARKS
237	300	General Requirements for Electric Plant - Transient Performance Requirements	ABS 4-8-3/1.9	The electrical characteristics of electrical equipment supplied from the main or emergency systems, other than battery supplies, are to be capable of being operated satisfactorily under normally occurring variations in voltage and frequency. Unless otherwise specified, the following variations from rated value are to be assumed: Permanent Transient Frequency ±5% ±10%(5s) Voltage +6%,-10% ±20%(1.5s)	
238	300	General Requirements for Electric Plant - Transient Performance Requirements	CFR, Title 46, Sec. 111.12-5/7, October 2000	Generator construction and testing - Each generator must meet the applicable construction and test requirements of section 4/5 of the ABS Rules for Building and Classing Steel Vessels or, for mobile offshore drilling units, section 4/3 of the ABS Rules for Building and Classing Mobile Offshore Drilling Units. Voltage regulation and parallel operation - Voltage regulation and parallel operation must meet sections 4/ 5C2.19.2, 4/5C2.19.3, 4/5C2.21.2, and 4/5C2.21.3 of the ABS Rules for Building and Classing Steel Vessels or, for mobile offshore drilling units, sections 4/3.31 and 4/3.33 of the ABS Rules for Building and Classing Mobile Offshore Drilling Units.	
239	300	General Requirements for Electric Plant - Transient Performance Requirements	IEEE Std 45 Clause 4.5	Power distribution systems should maintain the system characteristics described in Table 4-1 under all operating conditions. Power-consuming equipment should operate satisfactorily under the conditions described in Table 4-1, and should be designed to withstand the power interruption, transient, EMI, RFI, and insulation resistance test conditions inherent in the system. Power-consuming equipment requiring a non-standard voltage or frequency for successful operation should have integral power conversion capability. Power-consuming equipment should not have inherent characteristics that degrade the power quality of the supply system described in Table 4-1.	

ITEM NO.	SWBS NO.	SWBS TITLE AND TOPIC	STANDARD	AMPLIFICATION OF STANDARD	REMARKS
240	300	General Requirements for Electric Plant – Interfacing of Shipboard Systems	MIL-STD-1399/70-1	The purpose of this standard and the supporting sections is to define the standard interface characteristics and constraints applicable to the design of ships and of shipboard equipment to ensure interface compatibility within the shipboard environment.	
241	300	Main Source of Electrical Power and Lighting Systems – Electric Plant	SOLAS Part D, Reg. 41	Main source of electrical power of sufficient capacity to supply all electrical auxiliary services necessary for maintaining the ship in normal operational and habitable conditions will be ensured without recourse to the emergency source of electrical power. This main source of electrical power shall consist of at least two generating sets. Capacity of these sets shall be such that in the event of any one set being stopped it will still be possible to supply those services necessary to provide normal operational conditions of propulsion and safety. Speed and direction of rotation of the propulsion machinery or shafting shall be such that the services mentioned above can be maintained. The generating sets shall be such as to ensure that with any one generator or its primary source of power out of operation, the remaining generating sets shall be capable of providing the electrical services necessary to start the main propulsion plant from a dead ship condition. Where transformers constitute an essential part of the electrical supply system required by this paragraph, the system is to be arranged as to ensure the same continuity of the supply as is stated in this paragraph. The main switchboard shall be placed relative to one main generating station that, as far as is practicable, the integrity if the	

ITEM NO.	SWBS NO.	SWBS TITLE AND TOPIC	STANDARD	AMPLIFICATION OF STANDARD	REMARKS
			SOLAS Part D, Reg. 41 (cont'd)	normal electrical supply may be affected only by a fire or other casualty in one space. Where the total installed electrical power of the main generating sets is in excess of 3MW, the main busbars shall be subdivided into at least two parts which shall normally be connected by removable links or other approved means.	
242	300	Precautions Against Shock, Fire and Other Hazards of Electrical Origin, Electric Plant	SOLAS Part D, Reg. 45	Exposed metal parts of electrical machines or equipment which are not intended to be live but which are liable under fault conditions to become live shall be earthed unless the machines or equipment are: supplied at voltages not exceeding 55VDC or 55Vrms between conductors; supplied voltages not exceeding 250V by safety isolating transformers supplying only one consuming device; or constructed in accordance with the principle of double insulation. All electrical apparatus shall be so constructed and so installed as not to cause injury when handled or touched in the normal manner. When a distribution system for power, heating or lighting, with no connection to earth is used, a device capable of continuously monitoring the insulation level to earth and of giving an audible or visual indication of abnormally low insulation values shall be provided.	
243	300	Special Requirements for Machinery, boiler and Electrical Installations – Electric Plant	SOLAS Part D, Reg. 53	If the electrical power is normally supplied by more than one generator simultaneously in parallel operation, provision shall be made, for instance by load shedding, to ensure that, in case of loss of one of these generating sets, the remaining ones are kept in operation without overload to permit propulsion and steering, and to ensure the safety of the ship.	

ITEM NO.	SWBS NO.	SWBS TITLE AND TOPIC	STANDARD	AMPLIFICATION OF STANDARD	REMARKS
244	302	Electric Motors and Associated Equipment - Construction	USCG Cutter Certification Plan, Sort #442, December 2000	Specifies construction, rating, testing, and design requirements	
245	302	Electric Motors and Associated Equipment - General Requirements	USCG Cutter Certification Plan, Sort #440, December 2000	Specifies construction, design practices, and testing requirements.	
246	302	Electric Motors and Associated Equipment - General Requirements	USCG Cutter Certification Plan, Sort #441, December 2000	Specifies design, construction and testing requirements for electric motors.	
247	302	Electric Motors and Associated Equipment - Materials	USCG Cutter Certification Plan, Sort #445, December 2000	Metal used must be electrolytically inactive to steel. Metal considered shall be shown as an open symbol under mild steel in Table III with condition E.	
248	302	Electric Motors and Associated Equipment - Motor Controller	USCG Cutter Certification Plan, Sort #443, December 2000	Specifies design, testing and construction requirements for controllers. See SWBS 324 for motor control centers.	
249	302	Electric Motors and Associated Equipment - Motor Controller	USCG Cutter Certification Plan, Sort #444, December 2000	Specifies construction and testing requirements for controller enclosures.	
250	302	Electric Motors and Associated Equipment - Motor Controllers	ABS 4-8-3/5.7	In addition to the applicable requirements in 4-8-3/5.3, Overload and under-voltage protection - Overload protection and under-voltage protection, where provided, in the motor controllers	

ITEM NO.	SWBS NO.	SWBS TITLE AND TOPIC	STANDARD	AMPLIFICATION OF STANDARD	REMARKS
			ABS 4-8-3/5.7 (cont'd)	are to be in accordance with 4-8-2/9.17.2 and 4-8-2/9.17.3. Disconnecting means - A circuit-disconnecting device is to be provided for each branch circuit of motor rated 0.5 kW or above so that the motor and the controller may be isolated from the power supply for maintenance purposes. Resistor for control apparatus - Resistors are to be protected against corrosion either by rust-proofing or embedding in a protective material. Where fitted, the enclosure is to be well-ventilated and so arranged that other electrical equipment and wiring within will not be exposed to a temperature in excess of that for which they are designed.	
251	302	Electric Motors and Associated Equipment - Motor Controllers	CFR, Title 46, Sec. 111.70, October 2000	a) Each motor circuit, controller, and protection must meet the requirements of ABS Rules for Building and Classing Steel Vessels, sections 4/5A5.13, 4/5B2.13, 4/5B2.15, and 4/5C4; ABS Rules for Building and Classing Mobile Offshore Drilling Units, sections 4/3.87 through 4/ 3.94 and 4/3.115.6; or IEC 92-301, as appropriate. (b) In ungrounded three-phase alternating current systems, only two motor-running protective devices (overload coil or heater type relay within the motor and controller) need be used in any two ungrounded conductors, except when a wye-delta or a delta-wye transformer is used. (c) The motor disconnecting means must be an externally operable switch or circuit breaker. Heater circuits -- (a) The heater disconnecting device must be adjacent to the equipment disconnecting device. A fixed sign, warning the operator to open both devices, must be on the enclosure of the equipment disconnect device, except as in paragraph (b) of this	

ITEM NO.	SWBS NO.	SWBS TITLE AND TOPIC	STANDARD	AMPLIFICATION OF STANDARD	REMARKS
			CFR, Title 46, Sec. 111.70, October 2000 (cont'd)	section. (b) The sign must warn the operator of the presence of two sources of potential within the enclosure and show the location of the heater circuit disconnect device. (c) Electric heaters installed within motor controllers and energized from a separate circuit must be disconnected in the same manner as required by paragraph (a) of this section or by Sec. 111.70- 7(d).	
252	302	Electric Motors and Associated Equipment - Motor Controllers	IEEE Std 45 Clause 17	Control circuits that extend outside the controller enclosure to remote devices should operate at 120 V or less, and conductors should be protected against damage from short circuits. Conductors wired in series with current-limiting devices, such as coils and resistors that are located within the enclosure, are to be considered adequately protected. Conductors not protected by current limiting parts within the enclosure should be fused. The design of control apparatus should incorporate all possible steps to eliminate more than one source of potential in an enclosure. Where the control functions, such as interlocking, indicating light circuits, heater circuits, etc., make it impracticable to connect the circuits to the load side of the controller contacts, but require a separate source of potential for successful operation, one of the following alternative precautions should be observed: a) Limit the voltage of the circuit to not more than 55 V. b) Provide a disconnecting device actuated by the panel door enclosure. The device and its connections should be designed so that there are no exposed electrically uninsulated surfaces. c) A permanent instruction plate should be mounted on the external surface of the panel door enclosure stating that two or more sources of potential supply the equipment. Controllers should have an internally mounted wiring diagram showing the complete circuitry, including external connections.	

ITEM NO.	SWBS NO.	SWBS TITLE AND TOPIC	STANDARD	AMPLIFICATION OF STANDARD	REMARKS
			IEEE Std 45 Clause 17 (cont'd)	Where the ship arrangement conditions justify the application, it is recommended that consideration be given to arranging the controllers in groups in motor control centers, or on common panels. Terminal studs or connection points equipped with compression lugs designed and tested for stranded conductors in accordance with ANSI/UL 486A-1991, for wire connectors and lugs should be provided for all outgoing cables. Controller enclosures, the metal cases of instruments, and the secondaries of all instrument transformers should be grounded to hull ground potential. All wearing parts of controllers should be readily accessible for inspection and renewal.	
253	302	Electric Motors and Associated Equipment – Motor Controllers	CFR, Title 46, Sec. 111.70 (cont.) , October 2000	Motor controllers and motor control centers (a) General. The enclosure for each motor controller or motor control center must meet NEMA No. ICS 2 and NEMA No. 2.3 1983 or meet Table 5 of IEC 92-201, as appropriate, for the location where it is installed. In addition, each enclosure in a hazardous location must meet subpart 111.105 of this part. NEMA No. 2.4 provides guidance on the differences between NEMA and IEC devices for motor service. (b) Low-voltage release. Each motor controller for a fire pump, elevator, steering gear, or auxiliary that is vital to the vessel's propulsion system, except a motor controller for a vital propulsion auxiliary which can be restarted from a central control station, must have low-voltage release if automatic restart after a voltage failure or its resumption to operation is not hazardous. Automatic sequential starting of low-voltage release controllers is acceptable to meet this paragraph. (c) Low-voltage protection. Each motor controller must have low-	

ITEM NO.	SWBS NO.	SWBS TITLE AND TOPIC	STANDARD	AMPLIFICATION OF STANDARD	REMARKS
			CFR, Title 46, Sec. 111.70 (cont.) , October 2000 (cont'd)	voltage protection. (d) Identification of controllers. (1) Each motor controller and motor control center must be marked externally with the following information: (i) Manufacturer's name or identification. (ii) Voltage. (iii) Number of phases. (iv) Current. (v) kW (Horsepower). (vi) Identification of motor being controlled. (vii) Current rating of trip setting. (2) Each controller must be provided with heat durable and permanent elementary wiring/schematic diagrams of the controller located on the door interior. Remote control, interlock, and indicator circuits – (a) Overcurrent protection. A conductor of a control, interlock, or indicator circuit of a motor controller must be protected against overcurrent. (b) Accidental ground. The controller must be designed to prevent an accidental ground in a remote control circuit from causing the stop switches to fail to operate or causing the motor to start. (c) Source of potential. The potential for a control, interlock, or indicator circuit must be derived from the load side of the motor and controller disconnect device. (d) Switching. In the design of a control, interlock, or indicator circuit, all practicable steps must be taken to eliminate all but one source of power in an enclosure.	
254	302	Electric Motors and Associated Equipment - Motors	ABS 4-8-3/3	All generators and motors of 100 kW (135 hp) and over for essential services are to be designed, constructed and tested in accordance with the requirements of 4-8-3/3. All other rotating electrical machines are to be designed, constructed and tested in accordance with established industrial practices and manufacturer's specifications. Manufacturer's tests are to be in accordance with 4-8-3/3.15 and test certificates are to be made available when requested by the Surveyor. Acceptance of machines will be based on satisfactory performance after installation.	

ITEM NO.	SWBS NO.	SWBS TITLE AND TOPIC	STANDARD	AMPLIFICATION OF STANDARD	REMARKS
			ABS 4-8-3/3 (cont'd)	Generators are to be of continuous rating. Motors are to be of continuous rating unless utilized on an application that definitely imposes an intermittent duty on the motor. Ratings of rotating electrical machines are to be based on the maximum expected ambient temperature to which they are subjected; this temperature is not to be less than 50°C (122°F) for boiler and engine rooms and 45°C (113°F) for other locations (see 4-8-3/1.17). Overload/over-current capabilities for AC and DC generators and motors are to be in accordance with IEC Publication 60034-1. Short circuit capabilities of generators are to be in accordance with IEC Publication 60034-1. Under short circuit conditions, generators are to be capable of withstanding the mechanical and thermal stresses induced by short circuit current of at least three times the full load current for at least 2 seconds. Motor construction addresses shafting, lubrication, cooling, condensation prevention, stator temperature detection, enclosures, and nameplate data. Generator control addresses operating governors, which are to be fitted to each prime mover driving main or emergency generator, and is to be capable of automatically maintaining the speed within the following limits. Limits are given for steam or gas turbine and diesel prime movers. Requirements for AC generators are given. For DC generators, refer to IEC Publications 60092-202 and –301. Testing of the rotating machinery includes types of machines to be tested, insulation and winding resistance measurements, voltage regulation, load testing and temperature rise testing, overload current and short circuit testing, and over-speed testing.	

ITEM NO.	SWBS NO.	SWBS TITLE AND TOPIC	STANDARD	AMPLIFICATION OF STANDARD	REMARKS
255	302	Electric Motors and Associated Equipment - Motors	CFR, Title 46, Sec. 111.25, October 2000	The requirements for generators contained in Sec. 111.12-5 applies to motors. (46CFR111.12-5 Each generator must meet the applicable construction and test requirements of Section 4/5 of the ABS Rules for Building and Classing Steel Vessels or, for mobile offshore drilling units, section 4/3 of the ABS Rules for Building and Classing Mobile Offshore Drilling Units.) Marking - (a) Each motor must have a marking or nameplate that meets either article 430-7 of the NEC or IEC 92-301 (clause 16). (b) The marking or nameplate for each motor that is in a corrosive location must be corrosion-resistant. Duty cycle - Each motor must be rated for continuous duty, except a motor for an application listed in Table 111.25-15 or a similar duty must meet the minimum short-time rating stated in the table.	
256	302	Electric Motors and Associated Equipment - Motors	IEEE Std 45 Clause 14	All motors should be compatible with the voltage, phase, and frequency of the supply system. The construction and type of winding should be determined by the conditions under which the motor will operate. Motors may be of the wound-rotor induction, squirrel-cage induction, synchronous, or suitable commutator type. Motors should be constructed so that vibration and shock likely to arise under normal service conditions do not impair their operation. Windings and current-carrying parts should be copper, and fasteners securing the current-carrying parts should be provided with means to prevent loosening due to vibration. Motors used with variable speed drives should be specifically designed to operate successfully on the nonsinusoidal input power from the drive. Squirrel-cage induction motors should be used wherever suitable. Motors in damp spaces or in the weather, especially motors left idle for appreciable periods, should be provided with an effective means (e.g., internal heaters) to prevent	

ITEM NO.	SWBS NO.	SWBS TITLE AND TOPIC	STANDARD	AMPLIFICATION OF STANDARD	REMARKS
			IEEE Std 45 Clause 14 (cont'd)	the accumulation of condensation. Measures should be taken, where necessary, to prevent the circulation of current between the shaft and the bearings. Oversize motors should be avoided.	
257	302	Motors – General	GENSPEC, Sect. 302a, 1995 Edition	Performance - Motors shall have characteristics that suit the performance requirements of the specifications for the driven equipment. Controllers shall provide control for starting, stopping, reversing, speed selection, and speed adjustment of motors, as determined from the requirements of the driven equipment and the motor. AC motors - Motors shall be selected to have locked rotor currents as low as practicable to keep voltage fluctuations on the distribution system to a minimum and to permit the maximum use of across-the-line starting. Commutator type motors shall not be furnished unless other types of AC motors cannot be used for the specific application. AC motors shall be selected to operate on a frequency of 60 hertz. Installation requirements - Motors, controllers, and electric brakes shall be installed and grounded as specified in Sect. 300.	
258	302	Motors – Motor Controllers	GENSPEC, Sect. 302a, 1995 Edition	Standard ratings of controllers shall be used. Controllers shall be manual or magnetic, depending on the required features such as type of protection, performance, whether integral or remote control, and on the rating of the motor controlled. Manual controllers shall be limited to applications of 7-1/2 hp and less. Controllers intended for repeated-jogging service requiring interruption of starting current shall be suitably derated. Magnetic controllers shall be used for applications that require automatic performance. Controllers shall be provided with protective features as determined by the requirements of the driven auxiliary and in accordance with the given table.	

ITEM NO.	SWBS NO.	SWBS TITLE AND TOPIC	STANDARD	AMPLIFICATION OF STANDARD	REMARKS
			GENSPEC, Sect. 302a, 1995 Edition (cont'd)	AC controllers - Across-the-line ac controllers shall be used for applications where practicable. Controllers shall be selected on the basis of the starting characteristics of the motor, the effects of voltage dips resulting from starting currents on the distribution system, the torque, and mechanical requirements of the drive. Controllers shall be selected so that voltage dip on the ship service power distribution system, with a single generator supplying the load, shall not exceed particular values given.	
259	302	Motors – Motor Enclosures	GENSPEC, Sect. 302a, 1995 Edition	The types of enclosures used for motors, controllers, and brakes shall comply with the requirements of Sect. 300 and as specified. Enclosures for motors driving pumps shall be totally enclosed fan cooled or higher grade of enclosure.	
260	303	Precautions Against Shock, Fire and Other Hazards of Electrical Origin - Protective Devices	SOLAS Part D, Reg. 45.6	Each separate circuit shall be protected against short circuit and against overload. The rating or appropriate setting of the overload protective device for each circuit shall be permanently indicated at the location of the protective device.	
261	303	Protective Devices for Electric Circuits - Circuit Breakers	ABS 4-8-5/3.5	Protection of generator - Protection against phase-to-phase fault in the cables connecting the generators to the switchboard and against inter-winding faults within the generator is to be provided. This is to trip the generator circuit breaker and de-excite the generator. Protection of power transformers - If the total connected load of all outgoing circuits of the power transformer secondary side exceeds the rated load, an overload protection or an overload alarm is to be fitted. When transformers are connected in parallel, tripping of the protective devices at the primary side is to automatically trip the switch or protective devices connected at the secondary side.	

ITEM NO.	SWBS NO.	SWBS TITLE AND TOPIC	STANDARD	AMPLIFICATION OF STANDARD	REMARKS
			ABS 4-8-5/3.5 (cont'd)	Voltage transformers for control and instrumentation - Voltage transformers are to be protected against short-circuit by fuses on the primary and secondary sides. Special consideration will be given to omitting fuses on the primary side or to fitting automatic circuit breakers on the secondary side instead of fuses. Fuses - The use of fuses for overload protection is not permitted but may be permitted for short-circuit protection. Over voltage protection - Lower voltage systems supplied through transformers from high voltage systems are to be protected against over-voltages due to loss of insulation between primary and secondary windings. Direct earthing of the lower voltage system or appropriate neutral voltage limiters may be fitted. Special consideration will be given to the use of an earthed screen between the primary and secondary windings of high voltage transformers. Coordination of protective devices - Regardless of the neutral arrangement, coordination of protective devices in accordance with the intent of 4-8-2/9.7 is to be provided.	
262	303	Protective Devices for Electric Circuits - Circuit Breakers	CFR, Title 46, Sec. 111.54, October 2000	(a) Each Circuit breaker must: (1) Meet the general provision of article 240 of the NEC or IEC 92- 202, as appropriate; (2) Meet subpart 111.55 of this part; and (3) Have an interrupting rating sufficient to interrupt the maximum asymmetrical short-circuit current available at the point of application. (b) Molded case circuit breakers must not be used in circuits having a nominal voltage of more than 600 volts (1,000 volts for circuits containing circuit breakers manufactured to IEC requirements). Each molded case circuit breaker must meet UL 489 and its marine supplement 489 SA or IEC 947-2 Part 2, except as noted in paragraph (e) of this section.	

ITEM NO.	SWBS NO.	SWBS TITLE AND TOPIC	STANDARD	AMPLIFICATION OF STANDARD	REMARKS
			CFR, Title 46, Sec. 111.54, October 2000 (cont'd)	(c) Circuit breakers, other than the molded case type, that are for use in one of the following systems must meet the following requirements: (1) An alternating current system having a nominal voltage of 600 volts or less, or 1,000 volts for IEC standard circuit breakers must meet-- (i) IEEE C37.13; (ii) IEEE Std 331; or (iii) IEC 947-2, Part 2. (2) A direct current system of 3,000 volts or less must meet ANSI C37.14 or IEC 947-2, Part 2. (3) An alternating current system having a nominal voltage greater than 600 volts, or greater than 1,000 volts for IEC standard circuit breakers must meet: (i) ANSI/IEEE C37.04 including all referenced supplements, IEEE Std 320 including all referenced supplements, and ANSI C37.12; or (ii) IEC 56. (d) A circuit breaker must not: (1) Be dependent upon mechanical cooling to operate within its rating; or (2) Have a long-time-delay trip element set above the continuous current rating of the trip element or of the circuit breaker frame. (e) Each circuit breaker located in an engine room, boiler room, or machinery space must be calibrated for a 50° C ambient temperature. If the circuit breaker is located in an environmentally controlled machinery control room where provisions are made for ensuring an ambient temperature of 40°C or less, a circuit breaker must have at least the standard 40°C ambient temperature calibration. Remotely controlled circuit breakers must also have a local means of operation.	
263	303	Protective Devices for Electric Circuits - Circuit Breakers	IEEE Std 45 Clause 13.2	Circuit breakers should meet other national or international requirements and be tested or certified by a nationally recognized independent testing laboratory as suitable for shipboard applications.	
264	303	Protective Devices for Electric Circuits - General	GENSPEC, Sect. 303, 1995 Edition	Each unit of equipment and all circuits shall be protected from short circuit currents and thermal overloads. The selection,	

ITEM NO.	SWBS NO.	SWBS TITLE AND TOPIC	STANDARD	AMPLIFICATION OF STANDARD	REMARKS
			GENSPEC, Sect. 303, 1995 Edition (cont'd)	arrangement, and performance of the various protective devices shall provide a complete, coordinated protective system having the following characteristics: High speed clearing of all low impedance faults; maximum continuity of service under fault conditions to be achieved by the selective operation of the various protective devices; maximum protection for electric apparatus and circuits under fault conditions by coordination of the thermal characteristics of the circuit or apparatus with the circuit interrupting characteristics of the protective device; adequate interrupting capacity in all circuit interrupting devices; adequate thermal rating in all of the various circuit protective and switching devices for operation under all service conditions; short circuit current carrying capacity of circuit breakers and bus transfer equipment in excess of the maximum available short circuit current within the maximum time limitations of circuit opening. Selection of protective devices - Ratings of protective devices shall be determined in accordance with the following criteria. The voltage rating shall not be less than the highest RMS alternating current line-to-line voltage, or the maximum direct current voltage of the circuit in which the device is applied. The continuous current rating shall be approximately equal to but not less than the resultant load current of the circuit. The interrupting rating shall be equal to or greater than the maximum available short circuit current at the point of application.	
265	303	Protective Devices for Electric Circuits - Requirements for Protection of Power	USCG Cutter Certification Plan, Sort #447,	Specifies the requirements for electrical system protection and coordination to provide for the prevention of injury to personnel, to minimize damage to the system components, and to limit the	

ITEM NO.	SWBS NO.	SWBS TITLE AND TOPIC	STANDARD	AMPLIFICATION OF STANDARD	REMARKS
		Generation and Distribution System Equipment	December 2000	extent and duration of interruption whenever equipment failure, human error, or adverse events occur on any portion of the system.	
266	303	Protective Devices for Electric Circuits - Requirements for Protection of Power Generation and Distribution System Equipment	USCG Cutter Certification Plan, Sort #448, December 2000	Specifies requirements for industrial control devices, and devices accessory thereto, for starting, stopping, regulating, controlling, or protecting electric motors. These requirements also cover industrial control devices or systems that store or process information and are provided with an output motor control function(s).	
267	303	Protective Devices for Electric Circuits - Requirements for Protection of Power Generation and Distribution System Equipment	USCG Cutter Certification Plan, Sort #450, December 2000	Each unit of equipment and all circuits shall be protected from short circuit currents and thermal overloads. The selection, arrangement, and performance of the various protective devices shall provide a complete, coordinated protective system having the following characteristics: (1) High speed clearing of all low impedance faults. (2) Maximum continuity of service under fault conditions to be achieved by the selective operation of the various protective devices. Proper localizing of a fault condition to restrict outages to the equipment affected. (3) Maximum protection for electric apparatus and circuits under fault conditions by coordination of the thermal characteristics of the circuit or apparatus with the circuit interrupting characteristics of the protective device. (4) Adequate interrupting capacity in all circuit interrupting devices. (5) Adequate thermal rating shall be provided in all of the various circuit protective and switching devices for operation under all	

ITEM NO.	SWBS NO.	SWBS TITLE AND TOPIC	STANDARD	AMPLIFICATION OF STANDARD	REMARKS
			USCG Cutter Certification Plan, Sort #450, December 2000 (cont'd)	service conditions. (6) Short circuit current carrying capacity of circuit breakers and bus transfer equipment in excess of the maximum available short circuit current within the maximum time limitations of circuit opening.	
268	303	Protective Devices for Electric Circuits - Requirements for Protection of Power Generation and Distribution System Equipment	USCG Cutter Certification Plan, Sort #451, December 2000	Normally, use of grounded electrical power systems is excluded per applicable section of this document. References to grounded conductor protection systems, in listed standards is to be ignored where, ungrounded systems are utilized.	
269	304	Electric Cable - Fiber Optic Cable	USCG Cutter Certification Plan, Sort #461, December 2000	Specifies testing requirements for fiber optic low smoke cable.	
270	304	Electric Cable - Fiber Optic Cable	USCG Cutter Certification Plan, Sort #462, December 2000	Specifies additional CFR requirements for fiber optic cable.	
271	304	Electric Cable - Fiber Optic Cable	USCG Cutter Certification Plan, Sort #463, December 2000	Fiber optic cable shall be at least 8-fiber multi-mode cable and sized to allow for 50% growth. Fiber optic cable jacketing and insulation shall be low smoke rated.	
272	304	Electric Cable - Wire and Cable	ABS 4-8-3/9	Electric cables constructed of stranded copper conductors, thermoplastic, elastomeric or other insulation, moisture-resistant jackets, and, where applicable, armoring and outer-sheathing are to be in accordance with IEC Publication 60092-353, IEEE Std-45 or other marine standards acceptable to the Bureau.	

ITEM NO.	SWBS NO.	SWBS TITLE AND TOPIC	STANDARD	AMPLIFICATION OF STANDARD	REMARKS
			ABS 4-8-3/9 (cont'd)	Maximum current carrying capacities of cables conforming to IEC Publications 60092-353 are to be in accordance with the values given in 4-8-3/Table 6. These values are applicable for cables installed double-banked on cable trays, in cable conduits or cable pipes. The values, however, are to be reduced for installations where there is an absence of free air circulation around the cables. See 4-8-2/7.7.1 and Note 4 of 4-8-3/Table 6. Electric cables are to be flame retardant and complying with any of the following: i) Depending on the intended installation, cables constructed to IEC Publication 60092 standards are to comply with the flammability criteria of IEC Publication 60332-3, Category A/F or A/F/R, or ii) Cables constructed to IEEE Std 45 are to comply with the flammability criteria contained therein. iii) Cables constructed to other standards, where accepted by the Bureau, are to comply with the flammability criteria of IEC Publication 60332-3, category A/F or A/F/R (depending on the intended installation), or other acceptable standards.	
273	304	Electric Cable - Wire and Cable	CFR, Title 46, Sec. 111.60, October 2000	Specifies requirements for cable construction and testing, specialty cable for communication and RF applications, cable application, minimum cable conductor size, cable installation, fiber optic cable, demand loads, segregation of vital circuits, wire, flexible electric cord and cables, connections and terminations, cable splices, cable insulation tests, and metal-clad (Type MC) cable.	
274	304	Electric Cable - Wire and Cable	IEEE Std 45 Clause 8	Specifies requirements for copper conductors, insulation, tapes, braids, conductor identification, cabling, fillers, cable jackets, armoring, painting, dimension tolerances, testing, IEEE cable types, cable designations, and US Navy cable types.	

ITEM NO.	SWBS NO.	SWBS TITLE AND TOPIC	STANDARD	AMPLIFICATION OF STANDARD	REMARKS
275	305	Electrical and Electronic Designating and Marking - General Requirements	USCG Cutter Certification Plan, Sort #466, December 2000	Specifies standard USCG practice for the marking and designating of electrical equipment, cable and systems.	
276	310	Ship Service and Emergency Generator Sets - Frequency Regulation	IEEE Std 45 Clause 5.6	Each prime mover should be fitted with an efficient speed-regulating governor as well as an automatic overspeed trip. The automatic overspeed trip should function to shut down the unit automatically when the speed exceeds the designed maximum service speed by more than 15%. The overspeed trip should also be equipped with a means for manual tripping. Each prime mover should, in addition, be under control of an efficient operating governor capable of limiting the speed, when full load is suddenly removed, to at least 5% less than that of the overspeed trip setting. The prime mover and regulating governor should also limit the momentary speed variation to 5.5% of the rated speed when 75% of the rated load of the generator is suddenly applied followed by the remaining 25% after an interval sufficient to restore the speed to steady state. The speed should return to within 1% of the final steady-state speed as follows: Load Response time Speed deviation ±75% 2.0 s 5.5% ±100% 5.0 s 7.5% Emergency generator sets should accept 100% rated kilowatt load in one step. All sets of 100 kW capacity and above should be provided with a coupling fitted to the rotor or armature shaft.	
277	310	Ship Service and Emergency Generator Sets – General	MIL-G-21296B, 1994 Edition	This specification covers constant speed, continuous duty direct current (dc) and alternating current (ac) diesel engine generator sets.	

ITEM NO.	SWBS NO.	SWBS TITLE AND TOPIC	STANDARD	AMPLIFICATION OF STANDARD	REMARKS
278	310	Ship Service and Emergency Generator Sets - General	MIL-G-22077C, 1993 Edition	This specification covers gas turbine generator sets rated up to 1,000 kilowatts (kW) direct current (dc) and up to 3,500 kW alternating current (ac) for shipboard use.	
279	310	Ship Service and Emergency Generator Sets - General	GENSPEC, Sect. 310a, 1995 Edition	Ship service generators and combination ship service/emergency generators are required to operate continuously in parallel with each other.	
280	310	Ship Service and Emergency Generator Sets – Installation	GENSPEC, Sect. 310c, 1995 Edition	The arrangement of the complete installations shall include clearances for dismantling within the space limitations of the selected locations on the ship. Generator sets shall be sufficiently rigid to permit installation on their foundations without further stiffening or bracing. Generator set foundations shall comply with Sect. 180. A remote shut-down device shall be installed for each diesel engine or gas turbine engine.	
281	310	Ship Service and Emergency Generator Sets – Selection of Equipment	GENSPEC, Sect. 310b, 1995 Edition	Ship service generator sets for any single ship shall be of like rating, type, design, and manufacture. Emergency generator sets for any single ship shall be of like rating, type, design, and manufacture. Like generator sets shall be of the same hand with respect to foundations or mounting arrangement, connection to steam lines, pumps, condensers, fuel lines, exhaust pipes, generator terminals, and other auxiliaries which would affect the replacement of a generator set.	
282	310	Ships Service and Emergency Generator Sets - General Requirements	USCG Cutter Certification Plan, Sort #468, December 2000	Specifies goals for the design of electrical systems that include both linear and non-linear load. The voltage and current waveforms that may exist throughout the system are described, and waveform distortion goals for the system designer are established.	

ITEM NO.	SWBS NO.	SWBS TITLE AND TOPIC	STANDARD	AMPLIFICATION OF STANDARD	REMARKS
283	310	Ships Service and Emergency Generator Sets - General Requirements	USCG Cutter Certification Plan, Sort #469, December 2000	Specifies recommended practice for the monitoring of electric power quality of single phase and polyphase AC power systems. This standard provides recommendations for measurement techniques, application techniques and interpretation of monitoring so that comparable results from monitoring surveys performed can be effectively compared.	
284	310	Ships Service and Emergency Generator Sets - Generator Control Systems and Switchboard	USCG Cutter Certification Plan, Sort #480, December 2000	Specifies standards that apply to programmable controllers that are principally used in industrial application for controls.	
285	310	Ships Service and Emergency Generator Sets - Generator Control Systems and Switchboard	USCG Cutter Certification Plan, Sort #484, December 2000	Specifies requirements for electrical, electronic and programmable equipment intended for control, monitoring alarm and protection systems for use in ships.	
286	310	Ships Service and Emergency Generator Sets - Generator Control Systems and Switchboard	USCG Cutter Certification Plan, Sort #488, December 2000	Automatic backup or manual control of engine speed governing shall be available. Backup or manual control shall be local and/or remote as required for the specific installation.	
287	310	Ships Service and Emergency Generator Sets - Generator Control Systems and Switchboard	USCG Cutter Certification Plan, Sort #489, December 2000	Backup or manual voltage control of generator voltage shall be available. Backup or manual control shall be local and/or remote as required for the specific installation.	
288	310	Ships Service and Emergency Generator Sets - Generator Control Systems and Switchboard	USCG Cutter Certification Plan, Sort #490, December 2000	All generator control stations shall have available sufficient system control and monitoring capabilities to control all generating units that can be attached in parallel. (Metering, Starting Engine Speed Governing, and Generator Voltage Control). This shall apply to backup or manual systems in addition to automated controls.	

ITEM NO.	SWBS NO.	SWBS TITLE AND TOPIC	STANDARD	AMPLIFICATION OF STANDARD	REMARKS
289	310	Ships Service and Emergency Generator Sets - Generator Control Systems and Switchboard	USCG Cutter Certification Plan, Sort #492, December 2000	For the purposes of this document the definition of manual control shall be control where the final control element is controlled directly by a corresponding human operator action. Manual control shall be local and/or remote as required for the specific installation. Manual control may be purely mechanical or power assisted by electrical pneumatic or hydraulic means.	
290	310	Ships Service and Emergency Generator Sets - Generator Prime Movers	USCG Cutter Certification Plan, Sort #475, December 2000	Specifies transient response performance requirements and test procedures. The generator prime mover shall be capable of providing sufficient power during the transient specified to ensure that the governor/prime mover system provides the specified response.	
291	310	Ships Service and Emergency Generator Sets - Requirements for Power Generation System Equipment, Ship Service and Emergency	USCG Cutter Certification Plan, Sort #474, December 2000	Specifies performance and test requirements for speed governing systems which sense speed and load and permit parallel operation of alternating current generating sets.	
292	310	Ships Service and Emergency Generator Sets - Generator Control Systems and Switchboard	USCG Cutter Certification Plan, Sort #482, December 2000	This specification is included for the specific purpose of delineating steady state voltage regulation, transient voltage variation, and transient recovery time values.	
293	310	Ships Service and Emergency Generator Sets - Generator Control Systems and Switchboard	USCG Cutter Certification Plan, Sort #483, December 2000	Specifies requirements related to instrumentation and controls.	
294	310	Ships Service and Emergency Generator Sets - Voltage Regulation	IEEE Std 45 Clause 5.4	General - Separate voltage regulators should be provided for each generator. Voltage regulation should be automatic and should function under steady-state load conditions between 0% and 100% load at all power factors that can occur in normal use. Voltage regulators should be capable of maintaining the voltage	

ITEM NO.	SWBS NO.	SWBS TITLE AND TOPIC	STANDARD	AMPLIFICATION OF STANDARD	REMARKS
			IEEE Std 45 Clause 5.4 (cont'd)	within the range of 97.5% to 102.5% of the rated voltage. A means of adjustment should be provided for the voltage regulator circuit. Voltage regulators should be capable of withstanding shipboard conditions and should be designed to be unaffected by normal machinery space vibration. Under overload or short circuit conditions, the generator and voltage regulator together with the prime mover and excitation system should be capable of maintaining a current of such magnitude and duration as required to properly actuate the associated electrical protective devices, with a value of not less than 300% of generator full-load current for a duration of 2 s, or of such additional magnitude and duration as required to properly actuate the associated protective circuit breakers. AC generators - The combined effect of the speed regulation of the prime mover in accordance with 5.6, the performance of the excitation and voltage regulating equipment and the characteristics of the generator system performance should be as described in the subclauses below. Means should be provided to automatically and proportionately divide the reactive power between generators when two or more generators are operating in parallel. Main or ship service generators - For single-generator operation (no reactive droop compensation), the steady-state voltage for any increasing or decreasing load between zero and full load at rated power factor under steady-state operation should not vary at any point more than ±2.5% of rated generator voltage. Under transient conditions, when the generator is driven at rated speed at its rated voltage, and is subjected to a sudden change of symmetrical load within the limits of specified current and power factor, the voltage should not fall below 88% nor exceed 112% of the rated voltage. The voltage should then be restored to within ±2.5% of the rated voltage in not more than 1.5 s. In the absence of precise	

ITEM NO.	SWBS NO.	SWBS TITLE AND TOPIC	STANDARD	AMPLIFICATION OF STANDARD	REMARKS
			IEEE Std 45 Clause 5.4 (cont'd)	information concerning the maximum values of the sudden loads, the following conditions should be assumed: 150% of rated current with a power factor of between 0.4 lagging and zero to be applied with the generator running at no-load, and then removed after steady-state conditions have been reached. For two or more generators with reactive droop compensation, the reactive droop compensation should be adjusted for a voltage droop of no more than 4% of rated voltage for a generator.	
295	310	Ships Service and Emergency Generator Sets - Voltage Regulation	IEEE Std 45 Clause 5.4 (cont.)	The system performance should be such that the average curve drawn through a plot of the steady-state voltage vs. load for any increasing or decreasing load between zero and full load at rated power factor, droops no more than 4% of rated voltage and no recorded point varies more than ±1% of rated generator voltage from the average curve. Isochronous operation of a single generator operating alone is acceptable. However, where two or more generators are arranged to operate in parallel, only one machine should be operating in the isochronous mode unless voltage regulation with isochronous, crosscurrent compensation, reactive load-sharing capabilities are provided. Care should be taken when operating machines in parallel in the droop/isochronous modes to ensure that the system minimum load does not decrease below the output set point of the droop machine(s), as this may cause a frequency change in the system and the machine operating in the isochronous mode to motor.	
296	314	Electric Power Conversion Equipment - Transformers	GENSPEC, Sect. 314, 1995 Edition	Application and performance of conversion equipment (motor generators, frequency changers, inverters, rectifiers and transformers) - Conversion equipment shall be provided to supply equipment that require electric power having characteristics that differ from those of the power furnished by the ship service generators. As far as practicable, conversion equipment power supplies supplying equipment having similar power characteristics shall be of identical ratings and shall be of one	

ITEM NO.	SWBS NO.	SWBS TITLE AND TOPIC	STANDARD	AMPLIFICATION OF STANDARD	REMARKS
			GENSPEC, Sect. 314, 1995 Edition (cont'd)	manufacturer's design. Transformers shall be provided to supply AC circuits, which cannot be operated on the ship service primary voltage. Transformers shall have kVA ratings equal to or next above the capacity requirements listed in Table I.	
297	314	Electric Power Supply Conversion Equipment - Inverters	ABS 4-8-3/7.5	The requirements in this Subsection are applicable to static converters for essential and emergency services using semiconductor rectifying elements such as diodes, reverse blocking triodes thyristors, etc. The manufacturer whose certificate of tests will be acceptable and is to be submitted upon request from the Bureau may carry out the tests. All semiconductor converters will be accepted subject to a satisfactory performance test conducted to the satisfaction of the Surveyor after installation. Cooling arrangements - Semiconductor converters are preferably to be of a dry and air-cooled type. Where semiconductor converters are of a liquid-immersed type, a liquid over-temperature alarm and gas over-pressure protection devices are to be provided. Accessibility - Semiconductor converter stacks or semiconductor components are to be mounted in such a manner that they can be removed from equipment without dismantling the complete unit. Nameplate - A nameplate or identification is to be provided on the semiconductor converter and is to indicate at least the manufacturer's name and the identification number of the equipment.	

ITEM NO.	SWBS NO.	SWBS TITLE AND TOPIC	STANDARD	AMPLIFICATION OF STANDARD	REMARKS
298	314	Electric Power Supply Conversion Equipment - Inverters	CFR, Title 46, Sec. 111.33, October 2000	Nameplate requirements are stated. Installation - Each semiconductor rectifier system must meet the installation requirements, as appropriate, of-- (a) Sections 45.2, 45.7, and 45.8 of IEEE Std 45, or (b) IEC 92-304. Alarms and shutdowns - Each power semiconductor rectifier must have a high temperature alarm or shutdown, except as provided in Sec. 111.33-11. Ventilation exhaust - The exhaust of each forced-air semiconductor rectifier system must: (a) Terminate in a location other than a hazardous location under Subpart 111.105 of this part; and (b) Not impinge upon any other electric device.	
299	314	Electric Power Supply Conversion Equipment - Inverters	IEEE Std 45 Clause 35	This clause addresses power semiconductor rectifiers of the copper oxide, selenium, and silicon types. Copper oxide and selenium rectifiers are also known as metallic rectifiers. It should be noted these latter types of semiconductor rectifiers might exhibit changes in resistance characteristics with age, use, and temperature history. Semiconductor rectifier cells (or devices) may be arranged in series assemblies, often referred to as "stacks," which themselves may be connected in various combinations of series and parallel circuits to form bridge, half wave, voltage doubler, or other combinations. Rectifier cells (or devices) may be connected to form various circuits, some intended to be operated from single-phase power sources and others from polyphase power sources. The thermal and instantaneous overload protective devices incorporated in the unit should be coordinated with the capacities of the cells. Surge suppression circuitry may be required to prevent any transient voltages from exceeding the rated peak reverse voltage rating of the cells in the rectifier unit. The rectifiers may be naturally cooled, forced-air-cooled, or liquid-cooled. Immersed and liquid-cooled rectifiers should use a nonflammable liquid. Immersed	

ITEM NO.	SWBS NO.	SWBS TITLE AND TOPIC	STANDARD	AMPLIFICATION OF STANDARD	REMARKS
			IEEE Std 45 Clause 35 (cont'd)	rectifiers should be capable of operation without leakage when the ship is inclined to an angle of 22.□□to each side of the vertical.	
300	314	Electric Power Supply Conversion Equipment – Rectifiers	ABS 4-8-3/7.5	Refer to the previous for requirements.	
301	314	Electric Power Supply Conversion Equipment – Rectifiers	CFR, Title 46, Sec. 111.33, October 2000	Refer to the previous for requirements.	
302	314	Electric Power Supply Conversion Equipment – Rectifiers	IEEE Std 45 Clause 35	Refer to the previous for requirements.	
303	314	Electric Power Supply Conversion Equipment - Transformers	ABS 4-8-3/7.3	Rating - Transformers are to be continuously rated based the maximum expected ambient temperature to which they are subjected, but not less than 45°C (113°F) for boiler and engine rooms and 40°C (104°F) for other locations. Temperature rise - The design temperature rise of insulated windings based on an ambient temperature of 40°C is not to exceed that in the following table: If the ambient temperature exceeds 40°C (104°F), the transformer is to be derated so that the total temperatures based on the table are not exceeded. Cooling medium - Transformers are to be of the dry and air cooled type. The use of liquid immersed type transformers will be subject to special consideration. Testing - Single-phase transformers rated 1 kVA and above and three-phase transformers rated 5 kVA and above intended for essential or emergency services are to be tested by the manufacturer whose certificate of tests will be acceptable and are to be submitted upon request by the Bureau. The tests are to	

ITEM NO.	SWBS NO.	SWBS TITLE AND TOPIC	STANDARD	AMPLIFICATION OF STANDARD	REMARKS
			ABS 4-8-3/7.3 (cont'd)	include measurement of winding resistance, voltage ratio, impedance voltage, short circuit impedance, insulation resistance, load loss, no load loss and excitation current, phase relation and polarity; dielectric strength; temperature rise (required for transformer of each size and type). Nameplate - Nameplates of corrosion-resistant material are to be provided in an accessible position of the transformer and are to indicate at least the manufacturer's name; the manufacturer's serial number (or identification mark); the year of manufacture; the number of phases; the rated power; the rated frequency; the rated voltage in primary and secondary sides; the rated current in primary and secondary sides; the class of insulation or permissible temperature rise, the ambient temperature.	
304	314	Electric Power Supply Conversion Equipment - Transformers	CFR, Title 46, Sec. 111.20, October 2000	(a) The temperature rise, based on an ambient temperature of 40°C, must not exceed the following: (1) For Class A insulation, 55°C. (2) For Class B insulation, 80°C. (3) For Class F insulation, 115°C. (4) For Class H insulation, 150°C. (b) If the ambient temperature is higher than 40°C, the transformer must be derated so that the total temperature stated in this section is not exceeded. The temperature must be taken by the resistance method. An autotransformer must not supply feeders or branch circuits. Each transformer must have protection against overcurrent that meets article 450 of the NEC or IEC 92-303.	
305	314	Electric Power Supply Conversion Equipment - Transformers	IEEE Std 45 Clause 34	Transformers should have copper windings, be of the dry type, air cooled by natural circulation, and have a dripproof enclosure as a minimum. Where used for essential services and located in areas where sprinkler heads or spraying devices for fire prevention are fitted, the transformers should be enclosed so that water cannot	

ITEM NO.	SWBS NO.	SWBS TITLE AND TOPIC	STANDARD	AMPLIFICATION OF STANDARD	REMARKS
			IEEE Std 45 Clause 34 (cont'd)	cause malfunction. In cases where capacity, space, or other restrictions warrant, transformers may be of the immersed (nonflammable liquid) self-cooled or other suitable type. Immersed type transformers should be suitable for operation at ±4° inclination without leakage and provided with a liquid level gauge to give indication of the level of liquid. Drip tray(s) or other suitable arrangements should be provided for collecting liquid leakage. All transformers should be capable of withstanding the thermal and mechanical effects of a short-circuit at the terminals of any winding for 2 s without damage. Foil-wound transformers constructed of conductors that are uncoated should be vacuum impregnated. Transformers should comply with *the Distribution, Power, and Regulating Transformers Standards Collection,* as applicable to the type, size, application and voltage rating of the units installed.	
306	314	Power Conversion Equipment - General Requirements	USCG Cutter Certification Plan, Sort #506, December 2000	Specifies requirements for industrial control devices, and devices accessory thereto, for starting, stopping, regulating, controlling, or protecting electric motors. These requirements also cover industrial control devices or systems that store or process information and are provided with an output motor control function(s).	
307	320	General Requirements for Electric Power Distribution Systems - Microprocessors	ABS 4-9-6/7	Each replaceable part is to be simple to replace and is to be constructed for easy and safe handling. All replaceable parts are to be so designed that it is not possible to connect them incorrectly or to use incorrect replacements. Input devices are to have clearly marked functions and, as far as practicable, are to be arranged to avoid conceivable inadvertent errors in their operations. Input devices, such as keyboard, which can be used to effect changes to equipment or processes under control, are to be provided with security arrangement, such as password, so as to	

ITEM NO.	SWBS NO.	SWBS TITLE AND TOPIC	STANDARD	AMPLIFICATION OF STANDARD	REMARKS
			ABS 4-9-6/7 (cont'd)	limit access to authorized personnel only. Where control action can be effected from more than one station, conflicting control station actions are to be prevented by means of interlock or warning. Control status is to be indicated at all stations. The size, color and density of text and graphic information displayed on a visual display unit are to be such that it may be easily read from the normal operator position under all operational lighting conditions. The brightness and contrast are to be capable of being adjusted. Where alarms are displayed by means of visual display unit, they are to appear in the sequence as the incoming signals are received. Alarming of the incoming fault signals is to appear on the screen regardless of the mode the computer or the visual display unit is in. Where visual display unit is used to display monitored parameters, unless other display means are provided capable of displaying the same information, the centralized control station is to be provided with at least two computer monitors. The failure of a primary color is not to prevent an alarm to be distinctly indicated. Information is to be presented clearly and intelligibly according to its functional relations. Display presentations are to be restricted to the data that is directly relevant for the user.	
308	320	General Requirements for Electric Power Distribution Systems - Microprocessors	CFR, Title 46, Sec. 62.25-25, October 2000	Programmable control or alarm system logic must not be altered after Design Verification testing without the approval of the cognizant Officer in Charge, Marine Inspection (OCMI). (See	Also see SWBS 202.

ITEM NO.	SWBS NO.	SWBS TITLE AND TOPIC	STANDARD	AMPLIFICATION OF STANDARD	REMARKS
			CFR, Title 46, Sec. 62.25-25, October 2000 (cont'd)	subpart 61.40 of this subchapter, Design Verification Tests). Safety control or automatic alarm systems must be provided with means, acceptable to the cognizant OCMI, to make sure set-points remain within the safe operating range of the equipment. Operating programs for microprocessor-based or computer-based vital control, alarm, and monitoring systems must be stored in non- volatile memory and automatically operate on supply power resumption. If a microprocessor-based or computer-based system serves both vital and non-vital systems, hardware and software priorities must favor the vital systems. At least one copy of all required manuals, records, and instructions for automatic or remote control or monitoring systems required to be aboard the vessel must not be stored in electronic or magnetic memory.	
309	320	General Requirements for Electric Power Distribution Systems - Microprocessors	IEEE Std 45 Clause 37	This clause presents a guide for the design and installation of electrical and electronic equipment intended for automatic or centralized control of machinery in ships. This clause deals with electrical, electronic, and programmable equipment and systems for control, monitoring, alarm, and protection on board vessels. It includes alarm and monitoring systems, semiautomatic, fully automatic, and autonomous (unattended) systems, including a) Propulsion plants and associated systems including lube oil and fuel systems b) Boilers (oil, gas, or flue gas—main and/or auxiliary) c) Incinerators d) Steam or combustion turbines e) Liquid and dry cargo handling and storage systems (including liquefied gases) f) Bilge and ballast systems g) Inert gas systems	Also see SWBS 202.

ITEM NO.	SWBS NO.	SWBS TITLE AND TOPIC	STANDARD	AMPLIFICATION OF STANDARD	REMARKS
			IEEE Std 45 Clause 37 (cont'd)	h) Refrigeration systems i) Electric power generating plants and Distribution equipment and machinery j) Hotel auxiliary systems k) Damage and fire control alarm and monitoring systems l) Navigating bridge control systems	
310	502	Auxiliary Diesel Engines - Cooling System	USCG Cutter Certification Plan, Sort #728, December 2000	Radiator cooling and combustion airflow requirements shall be satisfied independently of compartment ventilation requirements.	
311	502	Auxiliary Machinery – Auxiliary Diesel Engines	GENSPEC, Sect. 502b, 1995 Edition	Diesel engines shall comply with Mil. Spec. MIL-E-23457. The cable, handle, sheaths, pulleys, and hardware shall be constructed of materials that will not burn, melt, or be rendered inoperable in case of fire.	
312	502	Auxiliary Machinery - General	GENSPEC, Sect. 502a, 1995 Edition	In addition to requirements in Sects. 070 and 200 that are applicable to the installation of auxiliary machinery, the following are applicable: For installations in locations where sparking would be hazardous, auxiliary machinery shall be designed, and materials selected, to prevent sparking due to metal-to-metal contact. Drip pans shall be installed under oil strainers and filters. Spray shields shall be installed on pumps where, if the pump seal should fail, there is a possibility that oil or water would be sprayed over switchboards and other electrical equipment.	
313	502	Auxiliary Machinery – Shock	GENSPEC, Sect. 502e, 1995 Edition	All auxiliary machinery and associated systems shall meet Grade A shock requirements.	

ITEM NO.	SWBS NO.	SWBS TITLE AND TOPIC	STANDARD	AMPLIFICATION OF STANDARD	REMARKS
314	503	Pumps - Centrifugal Pumps	USCG Cutter Certification Plan, Sort #730, December 2000	Pumps operating at or near shut off shall be fitted with bleed lines.	
315	503	Pumps - Centrifugal Pumps	USCG Cutter Certification Plan, Sort #731, December 2000	Centrifugal pumps shall be provided with casing vents to remove air and drains to remove fluids.	
316	503	Pumps – Certification of Pumps	ABS 4-6-1/7.3	Pumps listed in Section 4-6-1/7.3.1 are to be certified by a Surveyor at the manufacturer's plants. The pumps are to be hydrostatically tested to a pressure of at least 1.5P, where *P* is the maximum working pressure of the pump. Pump capacities are to be checked with the pump operating at design conditions (rated speed and pressure head). For centrifugal pumps, the pump characteristic (head-capacity) design curve is to be verified to the satisfaction of the Surveyor.	
317	503	Pumps – Commercial Pumps	GENSPEC, Sect. 503c, 1995 Edition	Pumps shall be of commercial marine standards, and the material and construction shall be suitable for the operating conditions. Pump design, components, material selection, and testing requirements shall be in accordance with this section.	
318	503	Pumps - General Requirements	USCG Cutter Certification Plan, Sort #729, December 2000	Materials with low elongation percentage (i.e., cast iron) are prohibited.	

ITEM NO.	SWBS NO.	SWBS TITLE AND TOPIC	STANDARD	AMPLIFICATION OF STANDARD	REMARKS
319	503	Pumps – Installation	GENSPEC, Sect. 503b, 1995 Edition	Location of pumps, together with piping design and arrangement, shall provide the highest practicable net positive suction head for the pumps. Centrifugal pumps for seawater service shall be located where they will have positive static submergence head of at least 3 feet under all conditions of load and list up to 15 degrees. Relief valves for positive displacement pump discharges shall be located to protect both pump and system from overpressure. In addition to the general requirements in Sect. 505 relative to sizing and setting of relief valves, positive displacement pump relief valves shall be sized to pass full rated pump capacity at a pressure not exceeding 125 percent of the pump rated discharge pressure.	
320	503	Pumps – Mechanical Seals	USCG Cutter Certification Plan, Sort #736, December 2000	Specifies requirements for mechanical seals.	
321	503	Pumps – Noise and Vibration	GENSPEC, Sect. 503d, 1995 Edition	The noise and vibration requirements for all pumps shall be as specified in Sect. 073.	
322	503	Pumps - Positive Displacement Pumps	USCG Cutter Certification Plan, Sort #732, December 2000	Specifies requirements for relief valves.	
323	503	Pumps - Positive Displacement Pumps - High Speed Craft	USCG Cutter Certification Plan, Sort #733, December 2000	Specifies requirements for relief valves.	

ITEM NO.	SWBS NO.	SWBS TITLE AND TOPIC	STANDARD	AMPLIFICATION OF STANDARD	REMARKS
324	503	Pumps – Seawater Pumps	USCG Cutter Certification Plan, Sort #735, December 2000	Pumps shall be constructed of bronze copper-nickel alloy or composite materials. Abrasive separators shall be provided for seal water lines.	
325	503	Pumps – Selection of Equipment	GENSPEC, Sect. 503a, 1995 Edition	Pumps shall be sized to serve connected systems, machinery, or equipment during all specified service conditions. In addition to system requirements affecting selection of pumps and specified in the piping sections of these specifications, further requirements for condensate pumps, feed pumps, fuel service pumps, centrifugal pumps as well as recirculation requirements are given in this section.	
326	503	Pumps – Shock	GENSPEC, Sect. 503e, 1995 Edition	The shock grade requirements for all pumps shall be as specified in the applicable systems section.	
327	504	Instruments and Instrument Boards - General	GENSPEC, Sect. 504a, 1995 Edition	Instrumentation using mechanical, electrical, or other means of sensing, transmission and indication shall be in accordance with this section and with other sections covering detailed unique or supplemental requirements for specific systems and equipment.	
328	504	Instruments and Instrument Boards, Mechanical - Gauge Piping	USCG Cutter Certification Plan, Sort #741, December 2000	Specifies use of Navy standard drawing for instrument piping.	
329	504	Instruments and Instrument Boards, Mechanical - Gauge Piping	USCG Cutter Certification Plan, Sort #742, December 2000	Gauges are to be isolated from vibration and corrosive fluids.	

ITEM NO.	SWBS NO.	SWBS TITLE AND TOPIC	STANDARD	AMPLIFICATION OF STANDARD	REMARKS
330	504	Instruments and Instrument Boards, Mechanical - Gauge Piping	USCG Cutter Certification Plan, Sort #743, December 2000	Specifies instrument requirements.	
331	504	Instruments and Instrument Boards, Mechanical - Gauge Piping - High Speed Craft	USCG Cutter Certification Plan, Sort #744, December 2000	Specifies instrument requirements.	
332	504	Instruments and Instrument Boards, Mechanical - Pressure Gauges	USCG Cutter Certification Plan, Sort #739, December 2000	Specifies requirements for dial pressure indicators.	
333	504	Instruments and Instrument Boards, Mechanical - Pressure Gauges	USCG Cutter Certification Plan, Sort #740, December 2000	Pressure indication to be provided on the discharge side of each pump where necessary to evaluate pump performance. Pressure indication to be provided on the suction side of each pump where necessary to indicate clogged filters, strainers, closed valves and any other adverse suction conditions. Differential pressure across filters and strainers to be provided where monitoring of these filters could prevent damage to equipment or reduced system performance that is not readily apparent without differential pressure indication.	
334	504	Instruments and Instrument Boards, Mechanical - Thermometers	USCG Cutter Certification Plan, Sort #737, December 2000	Specifies use of Navy standard drawing for thermometer selection.	
335	504	Instruments and Instrument Boards, Mechanical - Thermometers	USCG Cutter Certification Plan, Sort #738, December 2000	Specifies requirements for bimetallic temperature indicators are addressed. Thermometers containing mercury are prohibited on aluminum vessels.	

ITEM NO.	SWBS NO.	SWBS TITLE AND TOPIC	STANDARD	AMPLIFICATION OF STANDARD	REMARKS
336	505	General Requirements for Piping Systems – Acceptable Materials and Specifications	CFR, Title 46, Sec. 56.60-1, October 2000	Materials used in piping systems must be selected from the specifications which appear in Table 56.60-1(a) of this section or Table 56.60-2(a) of this part, or they may be selected from the material specifications of section I, III, or VIII of the ASME Code if not prohibited by a regulation of this subchapter dealing with the particular section of the ASME Code. Components made in accordance with the commercial standards listed in Table 56.60-1(b) of this section and made of materials complying with paragraph (a) this section may be used in piping systems within the limitations of the standards and within any further limitations specified in this subchapter.	
337	505	General Requirements for Piping Systems – Accessibility of Valves	ABS 4-6-2/9.17	Where the valves are required by the Rules to be readily accessible, their controls, during normal operating conditions, are to be: located in a space normally entered without using tools; clear of or protected from obstructions, moving equipment and hot surfaces that prevent operation or servicing; and within operators reach.	
338	505	General Requirements for Piping Systems – Arrangement	GENSPEC, Sect. 505e, 1995 Edition	Piping arrangement requirements for the following are specified: general, compartmental requirements, structural requirements, valves and components, and joints fire hazard reduction.	
339	505	General Requirements for Piping Systems – Assembly	CFR, Title 46, Sec. 56.90-1, October 2000	The assembly of the various piping components, whether done in a shop or as field erection, shall be done so that the completely erected piping conforms with the requirements of the regulations in this subchapter and to the specified requirements of the engineering design.	

ITEM NO.	SWBS NO.	SWBS TITLE AND TOPIC	STANDARD	AMPLIFICATION OF STANDARD	REMARKS
340	505	General Requirements for Piping Systems - Belled End Connection	USCG Cutter Certification Plan, Sort #752, December 2000	Specifies requirements for belled end connections are addressed.	
341	505	General Requirements for Piping Systems – Bolting	CFR, Title 46, Sec. 56.25-20, October 2000	Bolts, studs, nuts, and washers must comply with applicable standards and specifications listed in Sec. 56.60-1 of this part. Unless otherwise specified, bolting must be in accordance with ANSI B16.5. Bolts and studs must extend completely through the nuts. Carbon steel bolts or bolt studs may be used if expected normal operating pressure does not exceed 300 pounds per square inch gage and the expected normal operating temperature does not exceed 400 deg. F. Carbon steel bolts must have heavy hexagon heads in accordance with ANSI B18.2.1 and must have heavy semifinished hexagonal nuts in accordance with ANSI B18.2.2, unless the bolts are tightly fitted to the holes and flange stress calculations taking the bolt bending stresses into account are submitted. When class 250 cast iron flanges are used or when class 125 cast iron flanges are used with ring gaskets, the bolting material must be carbon steel conforming to ASTM Specification A307, Grade B. Alloy steel stud bolts must be threaded full length or, if desired, may have reduced shanks of a diameter not less than that at the root of the threads. They must have heavy semi-finished hexagonal nuts in accordance with ANSI B18.2.2. All alloy bolts or bolt studs and accompanying nuts are recommended to be threaded in accordance with ANSI B1.1, Class 2A external threads, and Class 2B internal threads (8-thread series 8UN for 1 inch and larger). Washers, when used under nuts, shall be of forged or rolled steel.	

ITEM NO.	SWBS NO.	SWBS TITLE AND TOPIC	STANDARD	AMPLIFICATION OF STANDARD	REMARKS
342	505	General Requirements for Piping Systems – Bolting Procedure	CFR, Title 46, Sec. 56.90-5, October 2000	All flanged joints shall be fitted up so that the gasket contact faces bear uniformly on the gasket and then shall be made up with relatively uniform bolt stress. In bolting gasketed flanged joints, the gasket shall be properly compressed in accordance with the design principles applicable to the type of gasket used. Steel to cast iron flanged joints shall be assembled with care to prevent damage to the cast iron flange in accordance with Sec. 56.25-10. All bolts shall be engaged so that there is visible evidence of complete threading through the nut or threaded attachment.	
343	505	General Requirements for Piping Systems – Brazed Joints	CFR, Title 46, Sec. 56.30-30, October 2000	Brazed socket-type joints shall be made with suitable brazing alloys. The minimum socket depth shall be sufficient for the intended service. Brazing alloy shall either be end-fed into the socket or shall be provided in the form of a preinserted ring in a groove in the socket. The brazing alloy shall be sufficient to fill completely the annular clearance between the socket and the pipe or tube. Brazed socket-type joints shall not be used on systems containing flammable or combustible fluids in areas where fire hazards are involved or where the service temperature exceeds 425 deg. F. Brazed joints depending solely upon a fillet, rather than primarily upon brazing material between the pipe and socket are not acceptable.	
344	505	General Requirements for Piping Systems – Brazing Detail Requirements	CFR, Title 46, Sec. 56.75-25, October 2000	Pipe may be fabricated by brazing when the temperature to which such connections may be subjected does not exceed 425 deg. F. (For exceptions refer to Sec. 56.30-30(b)(1).)	

ITEM NO.	SWBS NO.	SWBS TITLE AND TOPIC	STANDARD	AMPLIFICATION OF STANDARD	REMARKS
			CFR, Title 46, Sec. 56.75-25, October 2000 (cont'd)	The surfaces to be brazed shall be clean and free from grease, oxides, paint, scale, and dirt of any kind. Any suitable chemical or mechanical cleaning method may be used to provide a clean wettable surface for brazing. After the parts to be joined have been thoroughly cleaned the edges to be brazed shall be given an even coating of flux prior to heating the joint as a protection against oxidation.	
345	505	General Requirements for Piping Systems – Brazing Filler Metal	CFR, Title 46, Sec. 56.75-5, October 2000	The filler metal used in brazing must be a nonferrous metal or alloy having a melting point above 1,000 deg. F. and below that of the metal being joined. The filler metal must meet and flow freely within the desired temperature range and, in conjunction with a suitable flux or controlled atmosphere, must wet and adhere to the surfaces to be joined. Prior to using a particular brazing material in a piping system, the requirements of Sec. 56.60-20 of this part should be considered. The brazing material used shall have a shearing strength of at least 10,000 pounds per square inch. The maximum allowable working pressure for brazing piping shall be determined by this part. Fluxes that are fluid and chemically active at the brazing temperature shall be used when necessary to prevent oxidation of the filler metal and the surfaces to be joined and to promote free flowing of the filler metal.	
346	505	General Requirements for Piping Systems – Brazing Heating	CFR, Title 46, Sec. 56.75-15, October 2000	The joint shall be brought to brazing temperature in as short a time as possible to minimize oxidation.	
347	505	General Requirements for Piping Systems – Brazing Joint Clearance	CFR, Title 46, Sec. 56.75-10, October 2000	The clearance between surfaces to be joined shall be no larger than is necessary to insure complete capillary distribution of the filler metal; between 0.002-inch minimum and 0.006-inch maximum.	

ITEM NO.	SWBS NO.	SWBS TITLE AND TOPIC	STANDARD	AMPLIFICATION OF STANDARD	REMARKS
348	505	General Requirements for Piping Systems – Brazing Pipe Joining Details	CFR, Title 46, Sec. 56.75-30, October 2000	Silver brazing and copper-alloy brazing shall be performed in accordance with paragraphs (a) and (b), respectively, of this section. Overall general brazing requirements shall be in accordance with paragraph (c) of this section.	
349	505	General Requirements for Piping Systems – Brazing Qualification	CFR, Title 46, Sec. 56.75-20, October 2000	The qualification of the performance of brazers and brazing operators shall be in accordance with the requirements of part C, section IX of the ASME Code and part 57 of this subchapter. Manufacturers shall perform those tests required by paragraph (a) of this section prior to performing production brazing.	
350	505	General Requirements for Piping Systems – Cast Iron and Malleable Iron	CFR, Title 46, Sec. 56.60-10, October 2000	Cast iron and malleable iron components shall not be used at temperatures above 450 deg. F. Cast iron and malleable iron fittings conforming to the specifications of Table 56.60-1(a) of this part may be used at pressures not exceeding the limits of the applicable standards of Table 56.60-11(b) of this part at temperatures not exceeding 450 deg. F. Cast iron and malleable iron shall not be used for valves or fittings in lines carrying flammable or combustible fluids which are directly connected to, or in the proximity of, equipment or other lines having open flame, or any parts operating at temperatures above 500 deg. F. Cast iron shall not be used for hull fittings, or in systems conducting lethal products.	
351	505	General Requirements for Piping Systems – Caulked Joints	CFR, Title 46, Sec. 56.30-27, October 2000	Caulked joints may not be used in marine installations.	
352	505	General Requirements for Piping Systems – Certification of Piping Components	ABS 4-6-1/7.1	Piping components are to be certified in accordance with 4-6-1/Table 2 and the requirements listed in 4-6-1/7.1.1 through 4-6-1/7.1.4 (if applicable), which include the following:	

ITEM NO.	SWBS NO.	SWBS TITLE AND TOPIC	STANDARD	AMPLIFICATION OF STANDARD	REMARKS
			ABS 4-6-1/7.1 (cont'd)	ABS certification Design approval Manufacturer's certification Identification	
353	505	General Requirements for Piping Systems – Control of Static Electricity	ABS 4-6-2/9.15	In order to prevent dangerous build-up of static charges resulting from the flow of fluid piping and independent tanks containing fluids having flash point of 60 deg. C (140 deg. F) or less and piping that is routed through hazardous areas are to be earthed (grounded) to the hull such that the resistance between any point on the piping and the hull (across joints, pipe to hull) does not exceed 1 M. Bonding straps are to be installed in visible locations, protected from mechanical damage, and made of corrosion-resistant material.	
354	505	General Requirements for Piping Systems – Design Conditions and Criteria	CFR, Title 46, Sec. 56.07-10, October 2000	The maximum allowable working pressure of a piping system shall not be greater than the internal design pressure defined in 104.1.2 of ANSI- B31.1. Where the maximum allowable working pressure of a system component, such as a valve or a fitting, is less than that computed for the pipe or tubing, the system pressure shall be limited to the lowest of the component maximum allowable working pressures. Appropriate relief devices shall safeguard every system, which may be exposed to pressures higher than the system's maximum allowable working pressure. Relief valves are required at pump discharges, except for centrifugal pumps, so designed and applied that a pressure in excess of the maximum allowable working pressure for the system cannot be developed. The relief valve setting shall not exceed the maximum allowable working pressure of the system. Its relieving capacity shall be	

ITEM NO.	SWBS NO.	SWBS TITLE AND TOPIC	STANDARD	AMPLIFICATION OF STANDARD	REMARKS
			CFR, Title 46, Sec. 56.07-10, October 2000 (cont'd)	sufficient to prevent the pressure from rising more than 20 percent above the system maximum allowable working pressure. Relief valves shall be certified as required in part 50 of this subchapter for valves, and shall also meet the requirements of Sec. 54.15-10 of this subchapter. Piping system designs shall account for the effects of ship motion and flexure, including weight, yaw, sway, roll, pitch, heave, and vibration. Materials for use in piping must be selected as described in Sec. 56.60-1(a) of this part. Tabulated allowable stress values for these materials shall be measured as indicated in 102.3.1 of ANSI-B-31.1, Tables 56.60-1 and 56.60-2(a). Allowable stress values, as found in the ASME Code, which are restricted in application by footnote or are italicized, shall not be used. Where multiple stresses are listed for a material, the lowest value of the listing shall be used unless otherwise approved by the Commandant.	
355	505	General Requirements for Piping Systems – Design Requirements Pertaining to Specific Systems	CFR, Title 46, Sec. 56.50-1, October 2000	Piping shall not be run over or in the vicinity of switchboards or other electrical equipment if avoidable. Piping systems shall be installed so that under no condition will the operation of safety or relief valves be impaired. Power actuated valves and remote valve controls shall be in accordance with paragraph (g) of this section. Suitable drains shall be provided at low points of piping systems. Piping, including valves, pipefitting and flanges, conveying vapors, gases or liquids, whose temperature exceeds 150 deg. F., shall be suitably insulated where necessary to preclude injury to personnel.	

ITEM NO.	SWBS NO.	SWBS TITLE AND TOPIC	STANDARD	AMPLIFICATION OF STANDARD	REMARKS
356	505	General Requirements for Piping Systems – Diesel Fuel Systems	CFR, Title 46, Sec. 56.50-75, October 2000	This section covers the requirements for installation, tubing connections and fittings, shut-off valves, outlets and drains, filling pipe and vent pipe as they pertain to the diesel fuel systems specified below: Diesel fuel systems on vessels greater than 100 gross tons shall be in accordance with paragraph (a) of this section. Diesel fuel systems on vessels of 100 gross tons or less shall be in accordance with paragraph (b) of this section.	For gasoline fuel systems (if applicable) refer to Section 56.50-70.
357	505	General Requirements for Piping Systems – Ductile Iron	CFR, Title 46, Sec. 56.60-15, October 2000	Ductile cast iron components made of material conforming to ASTM A395 may be used within the service restrictions and pressure- temperature limitations of UCD-3 of section VIII of the ASME Code. After machining, ductile iron castings must be hydrostatically tested to twice their maximum allowable working pressure and must show no leaks. Ductile iron castings exhibiting less than 12 percent elongation in 50 millimeters (2 inches) when subjected to a tensile test must meet the requirements for cast iron in this part.	
358	505	General Requirements for Piping Systems – Expanded or Rolled Joints	CFR, Title 46, Sec. 56.30-15, October 2000	Expanded or rolled joints may be used where experience or test has demonstrated that the joint is suitable for the design conditions and where adequate provisions are made to prevent separation of the joint.	
359	505	General Requirements for Piping Systems - Expansion, Support & Flexibility	USCG Cutter Certification Plan, Sort #764, December 2000	Expansion, Flexibility and Supports. Pipe hangers and piping arrangement shall permit piping expansion and contraction, without inducing abnormal stress concentrations.	

ITEM NO.	SWBS NO.	SWBS TITLE AND TOPIC	STANDARD	AMPLIFICATION OF STANDARD	REMARKS
360	505	General Requirements for Piping Systems - Expansion, Support & Flexibility	USCG Cutter Certification Plan, Sort #765, December 2000	Specifies requirements for design and installation of rigid pipe hangers.	
361	505	General Requirements for Piping Systems - Expansion, Support & Flexibility	USCG Cutter Certification Plan, Sort #766, December 2000	Specific requirements for pipe hanger and supports, including materials, design and manufacture	
362	505	General Requirements for Piping Systems – Fabrication, Assembly, and Erection	CFR, Title 46, Sec. 56.65-1, October 2000	The requirements for fabrication, assembly and erection in subparts 56.70 through 56.90 shall apply in lieu of 127 through 135.4 of ANSI-B31.1. Those paragraphs reproduced are so noted.	
363	505	General Requirements for Piping Systems – Ferrous Materials	CFR, Title 46, Sec. 56.60-3, October 2000	Ferrous pipe used for salt water service must be protected against corrosion by hot-dip galvanizing or by the use of extra heavy schedule material. Carbon or alloy steel having a carbon content of more than 0.35 percent may not be used in welded construction or be shaped by oxygen cutting process or other thermal cutting process.	
364	505	General Requirements for Piping Systems - Flange Bolting	USCG Cutter Certification Plan, Sort #772, December 2000	Specific requirements for flange bolting.	
365	505	General Requirements for Piping Systems – Flanged Joints	CFR, Title 46, Sec. 56.30-10, October 2000	Flanged or butt-welded joints are required for Classes I and I-L piping for nominal diameters exceeding 2 inches, except as otherwise specified in this subchapter. Flanges may be attached by any method shown in Figure 56.30-10(b) or by any additional means that may be approved by the Marine Safety Center. Pressure temperature ratings of the appropriate ANSI standard must not be exceeded.	

ITEM NO.	SWBS NO.	SWBS TITLE AND TOPIC	STANDARD	AMPLIFICATION OF STANDARD	REMARKS
366	505	General Requirements for Piping Systems – Flared, Flareless, and Compression Fittings	CFR, Title 46, Sec. 56.30-25, October 2000	This section applies to pipe fittings that are mechanically connected to pipe by such means as ferrules, flared ends, swaging, elastic strain preload, crimping, bite-type devices, and shape memory alloys. Fittings to which this section applies must be designed, constructed, tested, and marked in accordance with ASTM F 1387-93.	
367	505	General Requirements for Piping Systems - Flexible Hoses	USCG Cutter Certification Plan, Sort #754, December 2000	Hose shall not to exceed 30 inches in length unless required for flexibility.	
368	505	General Requirements for Piping Systems - Flexible Hoses	USCG Cutter Certification Plan, Sort #755, December 2000	Specifies the hose schedule to be used.	
369	505	General Requirements for Piping Systems - Flexible Hoses	USCG Cutter Certification Plan, Sort #756, December 2000	Specific requirements for piping devices and flexible hose assemblies.	
370	505	General Requirements for Piping Systems - Flexible Hoses	USCG Cutter Certification Plan, Sort #757, December 2000	Specific requirements for tagging and electronic log of hoses in piping systems.	
371	505	General Requirements for Piping Systems - Flexible Hoses	USCG Cutter Certification Plan, Sort #758, December 2000	Specific requirements for fluid power and control systems requirements.	

ITEM NO.	SWBS NO.	SWBS TITLE AND TOPIC	STANDARD	AMPLIFICATION OF STANDARD	REMARKS
372	505	General Requirements for Piping Systems - Flexible Hoses	USCG Cutter Certification Plan, Sort #759, December 2000	Specific requirements for hydraulic hose assemblies.	
373	505	General Requirements for Piping Systems - Flexible Hoses	USCG Cutter Certification Plan, Sort #760, December 2000	Specific requirements for hose and hose assemblies for marine applications.	
374	505	General Requirements for Piping Systems – Flexible Pipe Couplings of the Compression or Slip-on Type	CFR, Title 46, Sec. 56.30-40, October 2000	Flexible pipe couplings of the compression or slip-on type must not be used as expansion joints. To ensure that the maximum axial displacement (approximately 3/8" maximum) of each coupling is not exceeded, positive restraints must be included in each installation. Positive means must also be provided to prevent the coupling from ``creeping" on the pipe and uncovering the joint. Flexible couplings made in accordance with the applicable standards listed in Table 56.60-1(b) of this part and of materials complying with subpart 56.60 of this part may be used within the material, size, pressure, and temperature limitations of those standards and within any further limitations specified in this subchapter. Each coupling shall be tested in accordance with Sec. 56.97-5.	
375	505	General Requirements for Piping Systems – Fluid Conditioner Fittings	CFR, Title 46, Sec. 56.15-5, October 2000	Fluid conditioner fittings certified in accordance with subpart 50.25 of this subchapter are acceptable for use in piping systems and shall meet the requirements of this section.	

ITEM NO.	SWBS NO.	SWBS TITLE AND TOPIC	STANDARD	AMPLIFICATION OF STANDARD	REMARKS
376	505	General Requirements for Piping Systems – Fuel Oil Service System Piping for Internal Combustion Engines	ABS 4-6-5/3.3.7(a)	All external high-pressure fuel delivery lines between the high-pressure fuel pumps and fuel injectors are to be protected with a jacketed piping system capable of containing fuel from a high-pressure line failure. A jacketed pipe incorporates an outer pipe into which the high-pressure fuel pipe is placed, forming a permanent assembly. Metallic hose of approved design may be accepted as the outer pipe. The jacketed piping system is to include means for collection of leakage and arrangements are to be provided for an alarm to be given of a fuel line failure.	
377	505	General Requirements for Piping Systems – Fuel Oil System Components	ABS 4-6-4/13.7	Pipes are to meet the general requirements of certification in 4-6-1/7.1; materials in 4-6-2/3; and design in 4-6-2/5.1, subject to 4-6-4/13.7.1(a) through 4-6-4/13.7.1(c) of this section. Valves are to meet the general requirements of certification in 4-6-1/7.1; materials in 4-6-2/3; and design in 4-6-2/5.9 and 4-6-2/5.11. Cast iron valves are not to be used as shut-off valves for fuel oil tanks indicated in 4-6-4/9.3.3(a). Fuel oil pumps are to be fitted with stop valves at suction and the discharge sides. Relief valve is to be fitted on the discharge side unless the pump is of the centrifugal type having shut-off head no greater than the design pressure of the piping system. Where fitted relief valve is to discharge to suction side of the pump or into tank. All fuel oil heaters having any of the design parameters listed in 4-6-4/13.7.4(a) are to be certified by the Bureau (for pressure vessels, see Section 4-4-1). All heaters are to be fitted with a temperature indicator. Means of temperature control are to be provided. A high temperature alarm is also to be fitted to the heating medium, except where the maximum temperature of the heating medium can, in no case,	

ITEM NO.	SWBS NO.	SWBS TITLE AND TOPIC	STANDARD	AMPLIFICATION OF STANDARD	REMARKS
			ABS 4-6-4/13.7 (cont'd)	exceed 220 deg. C (428 deg. F). Filters and strainers are to be designed to withstand the maximum working pressure of the system in which they are installed.	
378	505	General Requirements for Piping Systems – Gasketed Mechanical Couplings	CFR, Title 46, Sec. 56.30-35, October 2000	This section applies to pipe fittings that form a seal by compressing a resilient gasket onto the pipe joint primarily by threaded fasteners and where joint creep is only restricted by such means as machined grooves, centering pins, or welded clips. Fittings to which this section applies must be designed, constructed, tested, and marked in accordance with ASTM F 1476-93 and ASTM F 1548-94. Gasketed mechanical couplings may be used within the service limitations of pressure, temperature and vibration recommended by the manufacturer, except that gasketed mechanical couplings must not be used in places specified in paragraph (b) of this section. Gasketed mechanical couplings must not be used as expansion joints. Positive restraints must be included, where necessary, to prevent the coupling from creeping on the pipe and uncovering the joint. Bite-type devices do not provide positive protection against creep and are generally not accepted for this purpose. Machined grooves, centering pins, and welded clips are considered positive means of protection against creep.	
379	505	General Requirements for Piping Systems – Gaskets	CFR, Title 46, Sec. 56.25-15, October 2000	Gaskets shall be made of materials that are not injuriously affected by the fluid or by temperature. Only metallic and suitable asbestos-free nonmetallic gaskets may be used on flat or raised face flanges if the expected normal operating pressure exceeds 720 pounds per square inch or the operating temperature exceeds 750 deg. F.	

ITEM NO.	SWBS NO.	SWBS TITLE AND TOPIC	STANDARD	AMPLIFICATION OF STANDARD	REMARKS
			CFR, Title 46, Sec. 56.25-15, October 2000 (cont'd)	The use of metal and nonmetallic gaskets is not limited as to pressure provided the gasket materials are suitable for the maximum fluid temperatures.	
380	505	General Requirements for Piping Systems – General Requirements	CFR, Title 46, Sec. 56.01-1, October 2000	The respective piping systems installed on ships and barges shall have the necessary pumps, valves, regulation valves, safety valves, relief valves, flanges, fittings, pressure gages, liquid level indicators, thermometers, etc., for safe and efficient operation of the vessel.	
381	505	General Requirements for Piping Systems – General Requirements	CFR, Title 46, Sec. 56.01-10, October 2000	Piping materials and appliances, such as pipe, tubing, fittings, flanges, and valves, except safety valves and safety relief valves covered in part 162 of subchapter Q (Specifications) of this chapter, are not required to be specifically approved by the Commandant, but shall comply with the applicable requirements for materials, construction, markings, and testing. These materials and appliances shall be certified as described in part 50 of this subchapter. Drawings listing material specifications and showing details of welded joints for pressure-containing appurtenances of welded construction shall be submitted in accordance with paragraph (a) of this section. Prior to installation aboard ship, arrangement drawings and diagrams of the systems listed in Sec. 56.01-10(c) shall be submitted for approval	
382	505	General Requirements for Piping Systems – General Requirements	CFR, Title 46, Sec. 56.01-5, October 2000	Piping systems for ships and barges shall be designed, constructed, and inspected in accordance with B31.1, the ``Code for Pressure Piping, Power Piping," of the ANSI (American National Standards Institute), as limited, modified, or replaced by specific requirements in this part.	

ITEM NO.	SWBS NO.	SWBS TITLE AND TOPIC	STANDARD	AMPLIFICATION OF STANDARD	REMARKS
383	505	General Requirements for Piping Systems – Heat Treatment of Bends and Formed Components	CFR, Title 46, Sec. 56.80-15, October 2000	Heat treatment of bends and formed components including carbon steel, ferritic alloy, and austenitic stainless steel pipe shall be in accordance with paragraph (a) through (g) of this section. Cold bending stress relieving treatments and postheat treatments shall meet the requirements of paragraph (c) of this section.	
384	505	General Requirements for Piping Systems – Heating and Cooling Methods	CFR, Title 46, Sec. 56.85-5, October 2000	Heat treatment may be accomplished by a suitable heating method that will provide the desired heating and cooling rates, the required metal temperature, metal temperature uniformity, and temperature control.	
385	505	General Requirements for Piping Systems – Hydrostatic Tests	CFR, Title 46, Sec. 56.97-30, October 2000	Preparation for hydrostatic tests shall be done in accordance with paragraph (a) through (c) of this section. Minimum and maximum permissible test pressures and hydrostatic test pressure holding times shall be in accordance with paragraph (e) through (g) of this section. Following the application of the hydrostatic test pressure for a minimum of 10 minutes (see Sec. 56.97-30(g)), examination for leakage must be made of all joints, connections and of all regions of high stress, such as regions around openings and thickness-transition sections.	
386	505	General Requirements for Piping Systems – Hydrostatic Tests of Pipes	ABS 4-6-2/7.3.1	All Class I and II pipes and integral fittings after completion of shop fabrication, but before insulation and coating, are to be hydrostatically tested, preferably before installation, in the presence of a Surveyor at a pressure 1.5 times the design pressure. All steam, boiler feed, compressed air and fuel oil pipes and their integral fittings where the design pressure is greater than 3.5 bar (3.6 kgf/cm 2, 50 lb/in 2) are to be hydrostatically tested as for Class I and Class II pipes and fittings above.	

ITEM NO.	SWBS NO.	SWBS TITLE AND TOPIC	STANDARD	AMPLIFICATION OF STANDARD	REMARKS
			ABS 4-6-2/7.3.1 (cont'd)	For steel pipes and integral fittings where the design temperature is above 300 deg. C (572 deg. F), the test pressure is to be determined by the formula in this section, but need not exceed 2P.	
387	505	General Requirements for Piping Systems – Hydrostatic Tests of Shell Valves	ABS 4-6-2/7.3.2	All valves intended for installation on the side shell, including valves at the sea chests, are to be hydrostatically tested, before installation, to a pressure of at least 5 bar (5.1 kgf/cm 2, 72.5 lb/in 2), in the presence of the Surveyor.	
388	505	General Requirements for Piping Systems – Initial Service Leak Test	CFR, Title 46, Sec. 56.97-38, October 2000	An initial service leak test and inspection is acceptable when other types of test are not practical or when leak tightness is conveniently demonstrable due to the nature of the service. The piping system must be gradually brought up to design pressure. After inspection of the piping system has proven that the installation is complete and all joints are leak-tight, the piping has met the requirements of Sec. 56.97-1.	
389	505	General Requirements for Piping Systems – Inspection	CFR, Title 46, Sec. 56.95-1, October 2000	The provisions in this subpart shall apply to inspection in lieu of 136 of ANSI-B31.1. Prior to initial operation, a piping installation shall be inspected to the extent necessary to assure compliance with the engineering design, and with the material, fabrication, assembly and test requirements of ANSI-B31.1, as modified by this subchapter.	
390	505	General Requirements for Piping Systems – Installation Tests	CFR, Title 46, Sec. 56.97-40, October 2000	The piping systems listed in paragraph (a) of this section shall be hydrostatically leak tested in the presence of a marine inspector at a pressure of 1.5 times the maximum allowable working pressure of the system Class II piping systems shall be tested under working conditions as specified in the section on initial service leak test, Sec. 56.97-38.	

ITEM NO.	SWBS NO.	SWBS TITLE AND TOPIC	STANDARD	AMPLIFICATION OF STANDARD	REMARKS
391	505	General Requirements for Piping Systems – Instrumentation, Control and Sampling Piping	CFR, Title 46, Sec. 56.50-97, October 2000	Instrument, control and sampling piping must comply with paragraph 122.3 of ANSI-B31.1 except that: (1) Soldered type fittings may not be used. (2) The outside diameter of takeoff connections may not be less than 0.840 inches for service conditions up to 900 psi or 800 deg. F., and 1.050 inches for conditions that exceed either of these limits.	
392	505	General Requirements for Piping Systems – Limitations on Materials	CFR, Title 46, Sec. 56.60-2, October 2000	The restrictions in this section apply to the use of welded pipe and tubing specifications when utilized in piping systems, and not when utilized in heat exchanger, boiler, pressure vessel, or similar components	
393	505	General Requirements for Piping Systems – Low Temperature Piping	CFR, Title 46, Sec. 56.50-105, October 2000	Piping systems designated to operate at temperatures below 0 deg. F. and pressures above 150 pounds per square inch gage shall be of Class I-L and shall be in accordance with paragraph (a) of this section. Piping systems designed to operate at temperatures below 0 deg. F. and pressures not higher than 150 pounds per square inch gage shall be of Class II-L and shall be in accordance with paragraph (b) if this section.	
394	505	General Requirements for Piping Systems – Manufacturing of Plastic Pipes	ABS 4-6-3/9	Preferably, the manufacturer is to have a quality system and be certified in accordance with 4-1-1/ 3.5.2 or ISO 9001. The quality system is to consist of elements necessary to ensure that pipes and components are produced with consistent and uniform mechanical and physical properties in accordance with recognized standards and is to include the tests in this section.	
395	505	General Requirements for Piping Systems - Materials	USCG Cutter Certification Plan, Sort #749, December 2000	Specifies the general schedule of piping, valves, fittings and associated piping components to be used. The Coast Guard permits the use of commercial design standards for valves and fittings.	

ITEM NO.	SWBS NO.	SWBS TITLE AND TOPIC	STANDARD	AMPLIFICATION OF STANDARD	REMARKS
396	505	General Requirements for Piping Systems - Materials	USCG Cutter Certification Plan, Sort #750, December 2000	Specifies requirements for mechanically attached fittings to piping systems.	
397	505	General Requirements for Piping Systems - Materials	USCG Cutter Certification Plan, Sort #751, December 2000	Specifies requirements for piping systems and appurtenances.	
398	505	General Requirements for Piping Systems - Maximum Velocity Limits	USCG Cutter Certification Plan, Sort #745, December 2000	Specifies velocity limits for piping systems except for hydraulics (see SWBS 556) and seawater (see SWBS 256). Velocity limits of 15 ft/sec and 25 ft/sec are to be used for fuel and JP-5 transfer and loading/off-loading conditions, respectively.	
399	505	General Requirements for Piping Systems – Metallic Expansion Joints	CFR, Title 46, Sec. 56.35-15, October 2000	Metallic expansion joints certified in accordance with subpart 50.25 of this subchapter are acceptable for use in piping systems. Metallic expansion joints must conform to the standards listed in Table 56.60-1(b) of this part and may be used within their specified pressure and temperature rating.	
400	505	General Requirements for Piping Systems – Metallic Piping	ABS 4-6-2/1	The provisions in Section 4-6-2 cover metallic piping. They include requirements for pipe materials, pipe design, and pipe fabrication, inspection and testing. They also include general requirements for shipboard installation practices. Requirements for plastic piping are provided in Section 4-6-3.	
401	505	General Requirements for Piping Systems – Metallic Piping Fabrication	ABS 4-6-2/7.1	Requirements for welding of pipes and fittings, heat treatment and non-destructive testing are given in Section 2-4-2. For this purpose, Class I and II are to be equated to Group I and Class III to Group II.	

ITEM NO.	SWBS NO.	SWBS TITLE AND TOPIC	STANDARD	AMPLIFICATION OF STANDARD	REMARKS
402	505	General Requirements for Piping Systems – Metallic Piping Flexible and Expansion Joints	ABS 4-6-2/5.7	Flexible and expansion joints are to be in accordance with 4-6-2/5.7.1 through 4-6-2/5.7.4 of this section. These requirements apply to hoses, molded non-metallic expansion joints, metallic bellow-type expansion joints, and slip-type expansion joints	
403	505	General Requirements for Piping Systems – Metallic Piping Material Specifications	ABS 4-6-2/3.1	While references are made to material specifications in Section 2-3-12, Section 2-3-13, Section 2-3-16 and Section 2-3-17, equivalent materials complying with a national or international standard will be considered for acceptance. Material specifications for ferrous pipes and casting are given in Section 4-6-2/3.1, These requirements apply to steel pipes, forged and cast steels, gray cast iron, nodular (ductile) iron, elevated temperature applications, and low temperature applications	
404	505	General Requirements for Piping Systems – Metallic Piping Material Specifications	ABS 4-6-2/3.3	Material specifications for copper and copper alloy pipes and castings are given in Section 2-3-14, Section 2-3-16 and Section 2-3-17. Copper and copper alloys are not to be used for fluids having a temperature greater than that listed in this section. Copper and copper alloy pipes may be used for Classes I and II systems provided they are of the seamless drawn type. Seamless drawn and welded copper pipes are acceptable for Class III systems.	
405	505	General Requirements for Piping Systems – Metallic Piping Minimum Wall Thickness	ABS 4-6-2/5.1	The wall thickness of pipes is not to be less than the greater of the value obtained by 4-6-2/5.1.1 or 4-6-2/5.1.3. However, 4-6-2/5.1.2 may be used as an alternative to 4-6-2/5.1.1. Not withstanding 4-6-2/5.1.1 or 4-6-2/5.1.2, the minimum wall thickness of pipes is not to be less than that indicated in 4-6-2/Table 4 for steel pipes, and 4-6-2/Table 5A and 4-6-2/Table 5B	

ITEM NO.	SWBS NO.	SWBS TITLE AND TOPIC	STANDARD	AMPLIFICATION OF STANDARD	REMARKS
			ABS 4-6-2/5.1 (cont'd)	for other metal pipes. The wall thicknesses listed in these tables are nominal wall thicknesses. When using the tables no allowances need to be made to account for negative tolerance or reduction in thickness due to bending.	
406	505	General Requirements for Piping Systems – Metallic Piping Pipe Branches	ABS 4-6-2/5.3	Pipe branches may be made by the use of standard branch fittings or by welded fabrication. In the case of welded fabrication, the main pipe is weakened by the hole that must be made in it to accommodate the branch pipe. The opening is to be compensated as described in this section. The opening and its compensation may be designed in accordance with the criteria of opening reinforcement of a pressure vessel.	
407	505	General Requirements for Piping Systems – Metallic Piping Pipe Joints	ABS 4-6-2/5.5	Pipe joints are to be in accordance with 4-6-2/5.5.1 through 4-6-2/5.5.6 of this section. These requirements apply to butt welded joints, socket welded joints, slip-on welded sleeve joints, flanged joints, threaded joints, flared, flareless and compression screw fittings	
408	505	General Requirements for Piping Systems – Metallic Piping Safety Relief Valves	ABS 4-6-2/5.11	Safety relief valves are to be treated as valves for the purposes of these rules and are to be constructed of materials permitted for the piping system classes and services in which they are installed. In general, they are also to comply with a recognized standard for relieving capacity.	
409	505	General Requirements for Piping Systems – Metallic Piping Valve Construction	ABS 4-6-2/5.9.3	Construction details for the following components are to comply with 4-6-2/5.93(a) through 4-6-2/5.9.3(d) of this section: hand-wheel, bonnet, valve trim, and valve ends	
410	505	General Requirements for Piping Systems – Metallic Piping Valve Design Pressure	ABS 4-6-2/5.9.2	The design pressure of valves intended for use on board a vessel is to be at least the maximum pressure to which they will be subjected but at least 3.5 bar (3.6 kgf/cm 2, 50 lb/in 2). Valves used in open-ended system, except those attached to the side shell (see 4-6-2/9.13), may be designed for pressure below 3.5 bar.	

ITEM NO.	SWBS NO.	SWBS TITLE AND TOPIC	STANDARD	AMPLIFICATION OF STANDARD	REMARKS
411	505	General Requirements for Piping Systems – Metallic Piping Valves	ABS 4-6-2/5.9.1	In general, valves are to comply with a recognized national standard, and are to be permanently marked in accordance with the requirements of the standard, see 4-6-1/7.1.4. For valves not complying with a recognized national standard, see 4-6-2/5.13.	
412	505	General Requirements for Piping Systems – Miscellaneous Pressure Vessel Components	CFR, Title 46, Sec. 54.01-25, October 2000	Requires that all pressure components for pressure vessels shall be as required by UG-11 of the ASME Code except as noted otherwise in this section. All pressure components conforming to an accepted ANSI (American National Standards Institute) Standard referred to in an adopted code, specification or standard or in this subchapter shall also be marked in accordance with MSS (Manufacturers' Standardization Society) Standard SP-25.	
413	505	General Requirements for Piping Systems – Nonferrous Materials	CFR, Title 46, Sec. 56.60-20, October 2000	Nonferrous materials listed in this subpart may be used in piping systems under the conditions listed in this section (see also Sec. 56.10-5(c).	
414	505	General Requirements for Piping Systems – Nonmetallic Expansion Joints	CFR, Title 46, Sec. 56.35-10, October 2000	Nonmetallic expansion joints certified in accordance with subpart 50.25 of this subchapter are acceptable for use in piping systems. Nonmetallic expansion joints must conform to the standards listed in Table 56.60-1(b) of this part. Nonmetallic expansion joints may be used within their specified pressure and temperature rating in vital and nonvital machinery sea connections inboard of the skin valve.	
415	505	General Requirements for Piping Systems – Nonmetallic Materials	CFR, Title 46, Sec. 56.60-25, October 2000	Plastic pipe installations shall be in accordance with the International Maritime Organization (IMO) resolution A.753 (18), Guidelines for the Application of Plastic Pipes on Ships and the supplemental requirements as per paragraph (a) of this section. Nonmetallic flexible hose shall be in accordance with paragraph	

ITEM NO.	SWBS NO.	SWBS TITLE AND TOPIC	STANDARD	AMPLIFICATION OF STANDARD	REMARKS
			CFR, Title 46, Sec. 56.60-25, October 2000 (cont'd)	(b) of this section. Plastic valves, fittings, and flanges may be used in systems employing plastic pipe. Such valves, fittings, and flanges shall be designed, fabricated, tested, and installed so as to satisfy the intent of the requirements for plastic pipe contained in this section.	
416	505	General Requirements for Piping Systems – Overboard Discharges and Shell Connections	CFR, Title 46, Sec. 56.50-95, October 2000	All inlets and discharges led through the vessel's side as well as any associated piping, valves, fittings and safety precautions shall be in accordance with this section.	
417	505	General Requirements for Piping Systems – Pipe and Tubing Selection	CFR, Title 46, Sec. 56.10-5, October 2000	Pipe and tubing shall be selected as described in Table 56.60-1(a). Ferrous, non-ferrous, and nonmetallic pipe shall be in accordance with paragraphs (b) through (d) of this section.	
418	505	General Requirements for Piping Systems – Pipe Bending	CFR, Title 46, Sec. 56.80-5, October 2000	Pipe may be bent by any hot or cold method and to any radius which will result in a bend surface free of cracks, as determined by a method of inspection specified in the design, and substantially free of buckles. Such bends shall meet the design requirements of 102.4.5 and 104.2.1 of ANSI-B31.1.	
419	505	General Requirements for Piping Systems – Pipe Blanks	CFR, Title 46, Sec. 56.25-7, October 2000	Blanks shall conform to the design requirements of 104.5.3 of ANSI-B31.1.	
420	505	General Requirements for Piping Systems – Pipe Flanges	CFR, Title 46, Sec. 56.25-5, October 2000	Flanges must conform to the design requirements of the applicable standards of Table 56.60-1(b) of this part of Appendix 2 of section VIII of the ASME Code. Plate flanges must meet the requirements of Sec. 56.30-10(b)(5) of this part and the material requirements of Sec. 56.60-1(a) of this part. Flanges may be integral or may be attached to pipe by threading, welding, brazing, or other means within the applicable standards specified in Table 56.60-1(b) of this part and the requirements of this subpart.	

ITEM NO.	SWBS NO.	SWBS TITLE AND TOPIC	STANDARD	AMPLIFICATION OF STANDARD	REMARKS
421	505	General Requirements for Piping Systems – Pipe Forming	CFR, Title 46, Sec. 56.80-10, October 2000	Piping components may be formed (swaging, lapping, or upsetting of pipe ends, extrusion of necks, etc.) by any suitable hot or cold working method, providing such processes result in formed surfaces which are uniform and free of cracks or other defects, as determined by methods of inspection specified in the design.	
422	505	General Requirements for Piping Systems – Pipe Joining Fittings	CFR, Title 46, Sec. 56.15-1, October 2000	Pipe joining fittings certified in accordance with subpart 50.25 of this subchapter are acceptable for use in piping systems. Threaded, flanged, socket-welding, butt welding, and socket-brazing pipe joining fittings, made in accordance with the applicable standards in Tables 56.60-1(a) and 56.60-1(b) of this part and of materials complying with subpart 56.60 of this part, may be used in piping systems within the material, size, pressure, and temperature limitations of those standards and within any further limitations specified in this subchapter. Fittings must be designed for the maximum pressure to which they may be subjected, but in no case less than 50 pounds per square inch gage. Pipe joining fittings not accepted for use in piping systems in accordance with paragraph (b) of this section must be in accordance with paragraph (c) of this section. Each pipe-joining fitting must be marked in accordance with MSS Standard SP-25.	
423	505	General Requirements for Piping Systems – Pipe Stress Calculations	CFR, Title 46, Sec. 56.35-1, October 2000	A summary of the results of pipe stress calculations for the main and auxiliary steam piping where the design temperatures exceed 800 deg. F shall be submitted for approval. Calculations shall be made in accordance with one of the recognized methods of stress analysis acceptable to the Marine Safety Center to determine the magnitude and direction of the forces and movements at all	

ITEM NO.	SWBS NO.	SWBS TITLE AND TOPIC	STANDARD	AMPLIFICATION OF STANDARD	REMARKS
			CFR, Title 46, Sec. 56.35-1, October 2000 (cont'd)	terminal connections, anchor and junction points, as well as the resultant bending stress, longitudinal pressure stress, torsional stress, and combined expansion stress at all such points.	
424	505	General Requirements for Piping Systems - Piping Arrangement	USCG Cutter Certification Plan, Sort #761, December 2000	Specifies requirements for arrangements.	
425	505	General Requirements for Piping Systems - Piping Arrangement	USCG Cutter Certification Plan, Sort #762, December 2000	Specifies requirements for pumps and piping systems.	
426	505	General Requirements for Piping Systems - Piping Arrangement - High Speed Craft	USCG Cutter Certification Plan, Sort #763, December 2000	Specifies requirements for pumps and piping systems.	
427	505	General Requirements for Piping Systems - Piping Diagrammatics and Drawings	USCG Cutter Certification Plan, Sort #770, December 2000	GENSPECS provides drawing requirement suitable for Coast Guard cutters. NAVSEA Dwg. No. 803-5001049 is included and provides an extensive list of piping symbols. Symbols in compliance with ASTM F1000 are also included, where applicable.	
428	505	General Requirements for Piping Systems – Piping Joints	CFR, Title 46, Sec. 56.30-1, October 2000	The selection and limitation of piping joints shall be as required by this subpart in lieu of requirements in 110 through 118 of ANSI-B31.1	
429	505	General Requirements for Piping Systems – Piping Joints	CFR, Title 46, Sec. 56.30-3, October 2000	The type of piping joint used shall be suitable for the design conditions and shall be selected with consideration of joint tightness, mechanical strength and the nature of the fluid handled.	

ITEM NO.	SWBS NO.	SWBS TITLE AND TOPIC	STANDARD	AMPLIFICATION OF STANDARD	REMARKS
430	505	General Requirements for Piping Systems – Piping Penetrations	ABS 4-6-2/9.7	Piping penetrations through bulkheads, decks and tank-tops shall be in compliance with 4-6-2/9.7.1 through 4-6-2/9.7.4 of this section, which includes requirements for the following: watertight integrity, fire tight integrity, collision bulkhead penetrations, and valves in watertight bulkheads for sluicing purposes	
431	505	General Requirements for Piping Systems – Piping Systems for Internal Combustion Engines	ABS 4-6-5/1	The provisions of this section are applicable to systems essential for operation of internal combustion engines (diesel engines and gas turbines) and associated reduction gears intended for propulsion and electric power generation. These systems include fuel oil, lubricating oil, cooling, starting air, and exhaust gas and crankcase ventilation. These provisions contain requirements for system design, system components, and specific installation details. Requirements for plans to be submitted, pipe materials, pipe and pipe fitting designs, fabrication, testing, general installation details, and component certification are given in Section 4-6-1 and Section 4-6-2. For plastic piping, see Section 4-6-3.	
432	505	General Requirements for Piping Systems – Plans and Data to be Submitted	ABS 4-6-1/9	The plans listed in Section 4-6-1/9.1 are to be submitted for review. Piping systems are to be diagrammatic and are to include the information listed in Section 4-6-1/9.3. The booklet of standard details as indicated in 4-6-1/9.1 is to contain standard practices to be used in the construction of the vessel, typical details of such items as bulkhead, deck and shell penetrations, welding details, pipe joint details, etc. This information may be included in the system plans, if desired.	

ITEM NO.	SWBS NO.	SWBS TITLE AND TOPIC	STANDARD	AMPLIFICATION OF STANDARD	REMARKS
433	505	General Requirements for Piping Systems – Plastic Pipe Bonding Procedure Qualification	ABS 4-6-3/11	Procedure qualification requirements and qualification testing for plastic pipe shall be in accordance with 4-6-3/11.1 and 4-6-3/11.3, respectively.	
434	505	General Requirements for Piping Systems – Plastic Piping	ABS 4-6-3/1	Pipes and piping components made of thermoplastic or thermosetting plastic materials, with or without reinforcement, may be used in piping systems referred to in 4-6-3/Table 1 subject to compliance with the following requirements. For the purpose of these rules ''plastic'' means both thermoplastic and thermosetting plastic materials, with or without reinforcement, such as polyvinyl chloride (PVC) and fiber reinforced plastics (FRP).	
435	505	General Requirements for Piping Systems – Plastic Piping Design	ABS 4-6-3/5	Plastic piping and piping systems shall be designed in accordance with 4-6-3/5.1 through 4-6-3/5.17, which includes requirements for the following: maximum internal and external pressure, axial strength, maximum allowable working temperature, impact resistance, fire endurance, flame spread, electrical conductivity, and marking.	
436	505	General Requirements for Piping Systems – Plastic Piping Installation	ABS 4-6-3/7	Installation of plastic pipes shall be in accordance with 4-6-3/7.1 through 4-6-3/7.13, which includes requirements for the following: supports, external loads, plastic pipe connections, electrical conductivity, shell connections, bulkhead and deck penetrations, and application of fire protection coatings.	
437	505	General Requirements for Piping Systems – Plastic Piping Specifications	ABS 4-6-3/3	Rigid plastic pipes are to be in accordance with a recognized national or international standard acceptable to the Bureau. Specification for the plastic pipe, including thermal and mechanical properties and chemical resistance, is to be submitted for review together with the spacing of the pipe supports.	

ITEM NO.	SWBS NO.	SWBS TITLE AND TOPIC	STANDARD	AMPLIFICATION OF STANDARD	REMARKS
438	505	General Requirements for Piping Systems – Pneumatic Tests	ABS 4-6-2/7.3.4	In general, pneumatic test in lieu of hydrostatic test is not permitted. Where it is impracticable to carry out the required hydrostatic test, pneumatic tests may be considered. In such cases, the procedure for carrying out the pneumatic test, having regard to safety of personnel is to be submitted to the Surveyor for review.	
439	505	General Requirements for Piping Systems – Pneumatic Tests	CFR, Title 46, Sec. 56.97-35, October 2000	When a pneumatic test is performed, it must be conducted in accordance with the requirements of this section.	
440	505	General Requirements for Piping Systems – Postheat Treatment	CFR, Title 46, Sec. 56.85-15, October 2000	Where pressure retaining components having different thicknesses are welded together as is often the case when making branch connections, the preheat and postheat treatment requirements of Table 56.85-10 apply to the thicker of the components being joined. Postweld heat treatment is required for Classes I, I-L, II-L, and systems. All butt welded joints in Class I piping shall be postweld heated as required by Table 56.85-10. The postheat treatment method selected for parts of an assembly shall not adversely affect other components. Postheat treatment of welded joints between dissimilar metals having different postheat requirements shall be that established in the qualified welding procedure. For those materials listed under P-No. 1, when the wall thickness of the thicker of the two abutting ends, after end preparation, is less than three-fourths inch, the weld need not be postheat treated. In all cases, where the nominal wall thickness is 3/ 4 in. or less, postheat treatment is not required.	

ITEM NO.	SWBS NO.	SWBS TITLE AND TOPIC	STANDARD	AMPLIFICATION OF STANDARD	REMARKS
441	505	General Requirements for Piping Systems – Preheating	CFR, Title 46, Sec. 56.85-10, October 2000	The minimum preheat temperatures listed in Table 56.85-10 for P- number materials groupings are mandatory minimum pre-heat temperatures. Preheat is required for Class I, I-L, I-N, II-N and II-L piping when the ambient temperature is below 50 deg. F. When welding dissimilar materials the minimum preheat temperature may not be lower than the highest temperature listed in Table 56.85-10 for any of the materials to be welded or the temperature established in the qualified welding procedure. The preheat temperature shall be checked by use of temperature-indicating crayons, thermocouples, pyrometers, or other suitable methods to assure that the required preheat temperature is obtained prior to and uniformly maintained during the welding operation.	
442	505	General Requirements for Piping Systems – Preparation for Testing	CFR, Title 46, Sec. 56.97-25, October 2000	Preparation for testing shall take into consideration the exposure of joints, addition of temporary supports, restraint or isolation of expansion joints, isolation of equipment not subject to pressure testing, treatment of flanged joints containing blinds, and precautions of test medium expansion and shall be done so in accordance with this section.	
443	505	General Requirements for Piping Systems - Pressure Design of Piping	USCG Cutter Certification Plan, Sort #747, December 2000	Specifies requirements for maximum allowable working pressure and minimum thickness.	
444	505	General Requirements for Piping Systems - Pressure Design of Piping - High Speed Craft	USCG Cutter Certification Plan, Sort #748, December 2000	Specifies requirements for maximum allowable working pressure and minimum thickness.	

ITEM NO.	SWBS NO.	SWBS TITLE AND TOPIC	STANDARD	AMPLIFICATION OF STANDARD	REMARKS
445	505	General Requirements for Piping Systems – Pressure Piping Classification	CFR, Title 46, Sec. 56.04-2, October 2000	Pressure piping classification shall be done in accordance with Table 56.04-2 of this section.	
446	505	General Requirements for Piping Systems – Pressure Relief Piping	CFR, Title 46, Sec. 56.50-20, October 2000	There must be no intervening stop valves between the vessel or piping system being protected and its protective device or devices, except as specifically provided for in other regulations or as specifically authorized by the Marine Safety Center. Discharge lines from pressure-relieving safety devices shall be designed to facilitate drainage. Stop valves between the safety or relief valve and the point of discharge are not permitted, except as specifically provided for in other regulations or as specifically approved by the Marine Safety Center.	
447	505	General Requirements for Piping Systems – Pressure Sensing Devices	ABS 4-6-2/9.11.2	Where pressure gauges or other pressure sensing devices are fitted in piping systems, valves are to be provided so that the devices can be isolated and removed without impairing the integrity of the pressurized system.	
448	505	General Requirements for Piping Systems – Pressure Testing of Nonstandard Piping System Components	CFR, Title 46, Sec. 56.97-5, October 2000	All nonstandard piping system components such as welded valves and fittings, nonstandard fittings, manifolds, seacocks, and other appurtenances must be hydrostatically tested to twice the rated pressure stamped thereon, except that no component should be tested at a pressure causing stresses in excess of 90 percent of its yield strength. Items for which an accepted standard appears in Table 56.60-1(b) need not be tested as described in paragraph (a) of this section, but need only meet the test required in the applicable standard.	

ITEM NO.	SWBS NO.	SWBS TITLE AND TOPIC	STANDARD	AMPLIFICATION OF STANDARD	REMARKS
449	505	General Requirements for Piping Systems – Pressure Tests	CFR, Title 46, Sec. 56.97-1, October 2000	The requirements in this subpart apply to pressure tests of piping in lieu of 137 of ANSI-B31.1. It is mandatory that the design, fabrication and erection of piping constructed under the regulations in this subchapter demonstrate leak tightness. Except where otherwise permitted in this subpart, this requirement must be met by a hydrostatic leak test in accordance with paragraph (b) of this section prior to initial operations. Where a hydrostatic test is not practicable, a pneumatic test (Sec. 56.97-35) or initial service leak test (Sec. 56.97-38) may be substituted if approved by the Commandant.	
450	505	General Requirements for Piping Systems – Pressure Vessel Allowable Stress Values at Low Temperatures	CFR, Title 46, Sec. 54.05-30, October 2000	The Coast Guard will give consideration to the enhanced yield and tensile strength properties of ferrous and nonferrous materials at low temperature for the purpose of establishing allowable stress values for service temperature below 0 deg. F. The use of such allowable stress values must be specially approved by the Coast Guard for each application. Submittals must include information and calculations specified by the Coast Guard (G-MSE) to demonstrate that the allowable stress for the material cannot be exceeded under any possible combination of vessel loads and metal temperature.	
451	505	General Requirements for Piping Systems – Pressure Vessel Certification	ABS 4-4-1/1.11.2	Mass-produced boilers, pressure vessels and heat exchangers may be certified on the basis of assessing the manufacturer's facilities under the quality Assurance Program (see 4-1-1/3.5.2), subject to their designs being approved by the Bureau in each case.	
452	505	General Requirements for Piping Systems – Pressure Vessel Certification	ABS 4-4-1/1.13.2	Plans and data to be submitted for pressure vessels and heat exchangers include: general arrangements, design data: design pressures and temperatures, fluid name, degree of radiographic examination, corrosion allowance, heat	

ITEM NO.	SWBS NO.	SWBS TITLE AND TOPIC	STANDARD	AMPLIFICATION OF STANDARD	REMARKS
			ABS 4-4-1/1.13.2 (cont'd)	treatment (or lack of it), hydrostatic test pressure setting of safety relief valves, material specifications including heat treatment and mechanical properties, shell and head details, and shell to head joint details, nozzles, openings, manways, etc., and their attachment details; flanges and covers, as applicable tubes, tube sheets, heads, shell flanges, covers, baffles, tube to tubesheet joint details, packings, as applicable, support structures, seating, etc., calculations in accordance with a recognized standard or code, and welding procedure specifications and procedure qualification records; post-weld heat treatment procedure; nondestructive examination plan; where applicable.	
453	505	General Requirements for Piping Systems – Pressure Vessel Certification	ABS 4-4-1/1.9	All boilers and pressure vessels within the scope of 4-4-1/1.1 are to be certified by the Bureau. Mass-produced pressure vessels, including seamless extruded cylinders and fluid power cylinders, may be certified by alternative means as described in 4-4-1/1.11. 4-4-1/Table 3 provides important elements of the certification process for each group of boilers and pressure vessels.	
454	505	General Requirements for Piping Systems – Pressure Vessel Codes and Standards	ABS 4-4-1/1.5	All boilers and pressure vessels required to be certified by 4-4-1/1.1 are to be designed, constructed and tested in accordance with Appendix 4-4-1A1 of this section. Alternatively, they may comply with a recognized code or standard.	
455	505	General Requirements for Piping Systems – Pressure Vessel Corrosion Allowance	ABS 4-4-1A1/3.5.2	A corrosion allowance (*C*) of not less than one-sixth of the calculated thickness, is to be used in determining the thickness of pressure vessels intended for air, steam or water or any combination thereof when they are designed with *S* values taken from 4-4-1A1/Table 2 and the minimum required thickness is less than 6.4 mm (0.25 in) except that the sum of the calculated thickness and corrosion allowance need not exceed 6.4mm (0.25 in). This corrosion allowance is to be provided on the surface in contact with the substance.	

ITEM NO.	SWBS NO.	SWBS TITLE AND TOPIC	STANDARD	AMPLIFICATION OF STANDARD	REMARKS
456	505	General Requirements for Piping Systems – Pressure Vessel Corrosion Allowances	CFR, Title 46, Sec. 54.01-35, October 2000	Vessels or portions of vessels subject to corrosion shall be as required by UG-25 of the ASME Code except as noted otherwise in this section. The pressure portions of pressure vessels shall: (1) Normally have a corrosion allowance of one-sixth of the calculated thickness, or one-sixteenth inch, whichever is smaller, added to the calculated thickness as determined by the applicable design formula. (2) Be specifically evaluated in cases where unusually corrosive cargoes will be involved, for the possible increase of this corrosion allowance. (3) Have no additional thickness required when acceptable corrosion resistant materials are used. (4) Not normally need additional thickness allowance when the effective stress (either S or SE depending on the design formula used) is 80 percent or less of the allowable stress listed in section VIII of the ASME Code for calculating thickness. Note: No applied linings except as provided in Part UCL of the ASME Code shall be acceptable.	
457	505	General Requirements for Piping Systems – Pressure Vessel Deformation Testing	ABS 4-4-1A1/1.5	Where the use of these rules is impracticable due to the shape of a proposed pressure vessel, a submission may be made for approval of maximum allowable working pressure determined from a hydrostatic deformation test made on a full-sized sample.	
458	505	General Requirements for Piping Systems – Pressure Vessel Design	ABS 4-4-1/5	All boilers, steam generators, fired heaters, pressure vessels and heat exchangers required to be certified by 4-4-1/1.1 are to be designed in accordance with Appendix 4-4-1A1. Alternatively, a recognized code or standard (see 4-4-1/1.5) may be used for this purpose. All such designs are to be submitted for approval before proceeding with the fabrication.	

ITEM NO.	SWBS NO.	SWBS TITLE AND TOPIC	STANDARD	AMPLIFICATION OF STANDARD	REMARKS
459	505	General Requirements for Piping Systems – Pressure Vessel Dimensional Tolerances	ABS 4-4-1/7.5	Parts to be welded are to be aligned within the tolerances specified in Section 2-4-2 or the applicable standard or code. The fitting of the main seams is to be examined by the Surveyor prior to welding.	
460	505	General Requirements for Piping Systems – Pressure Vessel Drains	ABS 4-4-1/17.5	Pressure vessels subject to corrosion are to be fitted with a suitable drain opening at the lowest point practicable; or a pipe may be used extending inward from any location to the lowest point.	
461	505	General Requirements for Piping Systems – Pressure Vessel External Pressure Requirements	CFR, Title 46, Sec. 54.01-30, October 2000	Vessels which may at times be subjected to partial vacuum due to nature of the contents, temperature, unloading operations, or other facet of employment shall either have vacuum breaker protection or be designed for not less than one-half atmosphere of external pressure.	
462	505	General Requirements for Piping Systems – Pressure Vessel Fabrication by Welding	CFR, Title 46, Sec. 54.20-1, October 2000	Pressure vessels and vessel parts that are fabricated by welding shall be as required by paragraphs UW-1 through UW-65 of section VIII of the ASME Code except as noted otherwise in this subchapter.	
463	505	General Requirements for Piping Systems – Pressure Vessel Fabrication for Hazardous Materials	CFR, Title 46, Sec. 54.20-2, October 2000	Pressure vessels containing hazardous materials as defined in Sec. 150.115 of this chapter must be of the class and construction required by subchapter D, I, O, or, when not specified, of a class determined by the Commandant. Class III pressure vessels must not be used for the storage or stowage of hazardous materials unless there is specific authorization in subchapters D, I, or O.	
464	505	General Requirements for Piping Systems – Pressure Vessel Fabrication Design	CFR, Title 46, Sec. 54.20-3, October 2000	Fabrication by welding shall be in accordance with the provisions of this part and with part 57 of this subchapter. Welding subject to UW-11(a) of the ASME Code shall be	

ITEM NO.	SWBS NO.	SWBS TITLE AND TOPIC	STANDARD	AMPLIFICATION OF STANDARD	REMARKS
			CFR, Title 46, Sec. 54.20-3, October 2000 (cont'd)	modified as described in Sec. 54.25-8 for radiographic examination. A butt welded joint with one plate edge offset, as shown in Figure UW-13.1(k) of the ASME Code, may only be used for circumferential joints of Class II and Class III pressure vessels. Attachment welds for nozzles and other connections shall be in accordance with UW-16 of the ASME Code. When fabricating by welding the minimum joint requirements shall be as specified under the column headed "minimum joint requirements" in Table 54.01-5(b) for various classes of pressure vessels.	
465	505	General Requirements for Piping Systems – Pressure Vessel Fabrication by Brazing	CFR, Title 46, Sec. 54.23-1, October 2000	Fabrication by brazing shall be in accordance with the provisions of this part and with part 57 of this subchapter.	
466	505	General Requirements for Piping Systems – Pressure Vessel General Requirements	CFR, Title 46, Sec. 54.01-5, October 2000	This part contains requirements for pressure vessels. Table 54.01-5(a) gives a breakdown by parts in this subchapter of the regulations governing various types of pressure vessels, boilers, and thermal units. Pressure vessels are divided into Classes I, I-L (low temperature), II, II-L (low temperature), and III. Table 54.01-5(b) describes these classes and sets out additional requirements for welded pressure vessels. The requirements for pressure vessels by class are identified 54.01-5(c) and must meet the requirements listed in 54.01-5(d). If a pressure vessel has more than one independent chamber and the chambers have different classifications, each chamber must, as	

ITEM NO.	SWBS NO.	SWBS TITLE AND TOPIC	STANDARD	AMPLIFICATION OF STANDARD	REMARKS
			CFR, Title 46, Sec. 54.01-5, October 2000 (cont'd)	a minimum, meet the requirements for its classification. If a single classification for the entire pressure vessel is preferred, the classification selected must be one that is required to meet all of the regulations applicable to the classification that is not selected. The design pressure for each interface between two chambers in a multi-chambered pressure vessel must the requirements of 54.01-5(g).	
467	505	General Requirements for Piping Systems – Pressure Vessel Hydrostatic Test	ABS 4-4-1/7.11	The Surveyor is to witness hydrostatic tests on all boilers and pressure vessels. The test pressure is not to be less than 1.5 times the maximum allowable working pressure or at such pressures as specified by the standard or code of compliance. Where hydrostatic tests are impracticable, alternative methods of pressure tests, such as pneumatic pressure test, may be considered for pressure vessels, subject to such test procedures being submitted for consideration in each case.	
468	505	General Requirements for Piping Systems – Pressure Vessel Hydrostatic Tests	ABS 4-4-1A1/7	All completed boilers and pressure vessels (after all required non-destructive examination and after postweld heat treatment) are to be subjected to a hydrostatic test at not less than 1.5 times the design pressure or the maximum allowable pressure (the pressure to be stamped on the nameplate is to be used) in the presence of a Surveyor.	
469	505	General Requirements for Piping Systems – Pressure Vessel Impact Test Properties for Low Temperature Service	CFR, Title 46, Sec. 54.05-20, October 2000	The impact energies of each set of transverse Charpy specimens may not be less than the values shown in Table 54.05-20(a). Only one specimen in a set may be below the required average and the value of that specimen must be above the minimum impact value permitted on one specimen only. See Sec. 54.05-5(c) for retest requirements. Transversely oriented Charpy V-notch impact specimens of ASTM A- 203 nickel steels must exhibit energies not less than the values shown in Sec. 54.05-20 (a).	

ITEM NO.	SWBS NO.	SWBS TITLE AND TOPIC	STANDARD	AMPLIFICATION OF STANDARD	REMARKS
470	505	General Requirements for Piping Systems – Pressure Vessel Inspection Openings	ABS 4-4-1/17.3	Inspection opening requirements for manholes, handholes, and pipe plugs are determined based on the vessel inside diameter and shall be in accordance with 17.3.1 through 17.3.5 of this section.	
471	505	General Requirements for Piping Systems – Pressure Vessel Inspection, Reports, and Stamping	CFR, Title 46, Sec. 54.10-1, October 2000	The inspection, tests, stamping, and reports for pressure vessels shall be as required by paragraphs UG-90 through UG-103 and UG- 115 through UG-120 of the ASME Code except as noted otherwise in this subpart.	
472	505	General Requirements for Piping Systems – Pressure Vessel Join Designs	ABS 4-4-1A1/7	Welded joints are to be designed in accordance with 2-4-2/7 and 2-4-2/9.	
473	505	General Requirements for Piping Systems – Pressure Vessel Joint and Dimensional Tolerances	ABS 4-4-1A1/7	Joint and dimensional tolerances are to be in accordance with 2-4-2/5.	
474	505	General Requirements for Piping Systems – Pressure Vessel Loadings	CFR, Title 46, Sec. 54.01-30, October 2000	The loadings for pressure vessels shall be as required by UG-22 of the ASME Code except as noted otherwise in this section. In evaluating loadings for certain pressure vessel applications, the Commandant may require consideration of the following loads in addition to those listed in UG-22 of the ASME Code: (1) Loading imposed by vessel's attitude in roll, list, pitch and trim. (2) Dynamic forces due to ship motions.	
475	505	General Requirements for Piping Systems – Pressure Vessel Loads other than Pressure	ABS 4-4-1A1/1.3	All boilers and pressure vessels designed with the provisions of this appendix are to take into account the hydrostatic head when determining the minimum thickness. Although not provided in the design rules of this appendix, additional stresses imposed by effects other than pressure or static head which increase the average stress by more than 10% of the	

ITEM NO.	SWBS NO.	SWBS TITLE AND TOPIC	STANDARD	AMPLIFICATION OF STANDARD	REMARKS
			ABS 4-4-1A1/1.3 (cont'd)	allowable working stress are also to be taken into account. These effects include the static and dynamic weight of the unit and its content, external loads from connecting equipment, piping and support structure, thermal stress, fluctuating temperature or pressure conditions, as well as loads during hydrostatic testing.	
476	505	General Requirements for Piping Systems – Pressure Vessel Low Temperature Operation	CFR, Title 46, Sec. 54.25-10, October 2000	This section contains requirements for pressure vessels and nonpressure vessel type tanks and associated secondary barrier, as defined in Sec. 38.05-4 and Sec. 154.7 of this chapter, and their parts constructed of carbon and alloy steels which are stressed at operating or hydrostatic test temperatures below 0 deg. F.	
477	505	General Requirements for Piping Systems – Pressure Vessel Low Temperature Operation	CFR, Title 46, Sec. 54.25-15, October 2000	Toughness tests for the materials listed in UHA-51(a) of the ASME Code for service temperatures below -425 deg. F., UHA-51(b)(1) through (5) for service temperatures below 0 deg. F., and UHA-51(c) for all service temperatures, shall be performed in accordance with the requirements of subpart 54.05. These requirements are also applicable to nonpressure vessel type, low temperature tanks and associated secondary barriers, as defined in Sec. 38.05-4 in subchapter D (Tank Vessels) of this chapter. Such tests are required regardless of the vessel's design stress. Service temperature is defined in Sec. 54.25-10(a)(2). Except as permitted by Sec. 54.05-30, the allowable stress values used in the design of low temperature pressure vessels may not exceed those given in Table UHA-23 of the ASME Code for temperatures of -20 deg. F. to 100 deg. F.	
478	505	General Requirements for Piping Systems – Pressure Vessel Low Temperature Operation	CFR, Title 46, Sec. 54.25-20, October 2000	For service temperatures below 0 deg. F. but not below the designated minimum service temperature, steel conforming to the specifications of Table 54.25-20(a) may be used in the fabrication of pressure vessels and nonpressure vessel tanks and associated secondary barriers, as defined in Sec. 38.05-4 of subchapter D (Tank Vessels) of this chapter. The ultimate and yield strengths	

ITEM NO.	SWBS NO.	SWBS TITLE AND TOPIC	STANDARD	AMPLIFICATION OF STANDARD	REMARKS
			CFR, Title 46, Sec. 54.25-20, October 2000 (cont'd)	shall be as shown in the applicable specification and shall be suitable for the design stress levels adopted. The service temperature shall not be colder than -320 deg. F. Service temperature is defined in Sec. 54.25-10(a) (2). The materials permitted under paragraph (a) of this section shall be tested for toughness in accordance with the requirements of UHT-6 of the ASME Code except that tests shall be conducted at the temperature specified in Sec. 54.05-6 in lieu of that in UHT-5(c) of the ASME Code. The qualification of welding procedures and welders and weld production testing for the steels of Table 54.25-20(a) shall conform to the requirements of part 57 of this subchapter and subpart 54.05 except that the Charpy V-notch testing acceptance criteria shall be in accordance with UHT-6(a) (4) and (5) of the ASME Code. The values of absorbed energy in foot-pounds and of fracture appearance in percentage shear, which are recorded for information when complying with paragraphs (b) and (c) of this section shall also be reported to the marine inspector or the Commandant, as applicable. Except as permitted by Sec. 54.05-30, the allowable stress values may not exceed those given in Table UHT-23 of the ASME Code for temperatures of 150 deg. F. and below.	
479	505	General Requirements for Piping Systems – Pressure Vessel Manufacturer's Documentation	ABS 4-4-1/7.13	The manufacturer is to submit documentation of fabrication records, including but not limited to material certificates, welding procedure qualification records, welder qualification records, heat treatment reports, nondestructive examination reports and dimensional check reports, as applicable, to the Surveyor for final review and acceptance.	

ITEM NO.	SWBS NO.	SWBS TITLE AND TOPIC	STANDARD	AMPLIFICATION OF STANDARD	REMARKS
480	505	General Requirements for Piping Systems – Pressure Vessel Manufacturer's Data Reports	CFR, Title 46, Sec. 54.10-25, October 2000	The Manufacturers' data report form, as provided by the Coast Guard, shall be completed in duplicate and certified by the manufacturer for each pressure vessel required to be shop inspected under these regulations. The original of this form shall be delivered to the Coast Guard inspector. Data forms for those parts of a pressure vessel requiring inspection, which are furnished by other than the shop of the manufacturer responsible for the completed unit, shall be executed in triplicate by the manufacturer of the parts. If a pressure vessel is required to be inspected in accordance with Sec. 54.10- 3(c), the manufacturer's data reports required by UG-120 must be made available to the Coast Guard inspector for review prior to inspection of the pressure vessel.	
481	505	General Requirements for Piping Systems – Pressure Vessel Marine Inspectors	CFR, Title 46, Sec. 54.10-3, October 2000	Only marine inspectors shall apply the Coast Guard Symbol. They will not apply any other code symbol to pressure vessels. A marine inspector referring to procedures outlined in UG-92 through UG-103 of the ASME Code and Sec. 50.30-10, 50.30-15, and 50.30-20 of this subchapter shall inspect all pressure vessels not exempted under provisions of Sec. 54.01-15. The marine inspector will then stamp the vessel with the Coast Guard Symbol. Pressure vessels described in Sec. 54.01-5(c)(3), except pressure vessels in systems regulated under Sec. 58.60 of this chapter, must be visually examined by a marine inspector prior to installation.	
482	505	General Requirements for Piping Systems – Pressure Vessel Marking and Stamping	CFR, Title 46, Sec. 54.10-20, October 2000	Pressure vessels that are required by Sec. 54.10-3 to be stamped with the Coast Guard Symbol must also be stamped in accordance with this section.	

ITEM NO.	SWBS NO.	SWBS TITLE AND TOPIC	STANDARD	AMPLIFICATION OF STANDARD	REMARKS
			CFR, Title 46, Sec. 54.10-20, October 2000 (cont'd)	Except as noted in paragraph (d) of this section, the data shall be stamped directly on the pressure vessel. The data shall be legibly stamped and shall not be obliterated during the service life of the pressure vessel. In lieu of direct stamping on thin walled pressure vessels, the information required by paragraph (a) of this section shall be stamped on a nameplate permanently attached to the pressure vessel when the pressure vessel is constructed of: (1) Steel plate less than one-fourth inch thick; or (2) Nonferrous plate less than one-half inch thick.	
483	505	General Requirements for Piping Systems – Pressure Vessel Material Certification and Tests	ABS 4-4-1/3.5	Materials, including welding consumable, entered into the construction of boilers and pressure vessels are to be certified by the material manufacturers as meeting the material specifications concerned. Certified mill test reports, traceable to the material concerned, are to be presented to the Surveyor for information and verification in all cases. In addition, where so indicated in 4-4-1/Table 3, materials of the main pressure parts, namely, steam and water drums, shell and heads, headers, shell flange, tubes, tubesheets, etc. are required to have their materials tested in the presence of a Surveyor to verify their compliance with the corresponding material specifications.	
484	505	General Requirements for Piping Systems – Pressure Vessel Material Tests	ABS 4-4-1/7.1	Material tests are to be in accordance with Section 4-4-1/3.5.	

ITEM NO.	SWBS NO.	SWBS TITLE AND TOPIC	STANDARD	AMPLIFICATION OF STANDARD	REMARKS
485	505	General Requirements for Piping Systems – Pressure Vessel Maximum Allowable Working Pressure	ABS 4-4-1A1/3.5.1	Specifies the manner in which the maximum allowable working pressure is to be determined for pressure vessels.	
486	505	General Requirements for Piping Systems – Pressure Vessel Maximum Allowable Working Pressure	CFR, Title 46, Sec. 54.10-5, October 2000	The maximum allowable working pressure for a vessel is the maximum pressure permissible at the top of the vessel in its normal operating position at the operating temperature specified for that pressure. The maximum allowable working pressure for a vessel part is the maximum internal or external pressure, including the static head thereon, as determined by the rules and formulas in this Division (ASME Code), together with the effect of any combination of loadings listed in UG-22 of the ASME Code (see Sec. 54.01-30) which are likely to occur, for the designated coincident operating temperature, excluding any metal thickness specified as corrosion allowance. (See UG-25 of the ASME Code.)	
487	505	General Requirements for Piping Systems – Pressure Vessel Mechanical Stress Relief	CFR, Title 46, Sec. 54.30-10, October 2000	The mechanical stress relief shall be carried out in accordance with the stipulations identified in Sec. 54.30-10 using water as the pressurizing medium	
488	505	General Requirements for Piping Systems – Pressure Vessel Mechanical Stress Relief	CFR, Title 46, Sec. 54.30-15, October 2000	A stress analysis shall be performed to determine if the tank may be exposed to excessive loadings during the mechanical stress relief process. In all cases where the tanks are mechanically stress relieved in place in the ship or barge and the tanks are designed to carry cargoes with a specific gravity less than 1.05, the ship or barge shall be shown to have adequate stability and buoyancy, as well as strength to carry the excess weight of the tank during the stress relief procedure.	

ITEM NO.	SWBS NO.	SWBS TITLE AND TOPIC	STANDARD	AMPLIFICATION OF STANDARD	REMARKS
489	505	General Requirements for Piping Systems – Pressure Vessel Mechanical Stress Relief	CFR, Title 46, Sec. 54.30-5, October 2000	Class II-L pressure vessels that require stress relief (see Table 54.01-5(b)) may be mechanically stress relieved in accordance with Sec. 54.30-5(a). When a pressure vessel is to be mechanically stress relieved in accordance with Sec. 54.30-10(a)(1), its maximum allowable working pressure will be 40 percent of the value that would otherwise be determined.	
490	505	General Requirements for Piping Systems – Pressure Vessel Non-destructive Examination	ABS 4-4-1/7.7	Radiographic examinations are to be in accordance with 2-4-2/23 or the applicable standard or code. All Group I boilers and pressure vessels are to have their butt seams fully radiographed. See 4-4-1/1.9. Group II pressure vessels are to be radiographed to the extent as required by the designed joint-efficiency. The radiography standard and acceptance criteria, along with the degree of other non-destructive examination, such as ultra-sonic, dye penetrant, or magnetic particle, are to be in accordance with the chosen standard or code.	
491	505	General Requirements for Piping Systems – Pressure Vessel Nondestructive Examinations	ABS 4-4-1A1/7	Radiography of butt-welded seams is to be in accordance with Section 2-4-2/23.	
492	505	General Requirements for Piping Systems – Pressure Vessel Openings and Reinforcements	ABS 4-4-1A1/7	The requirements in this section apply to all openings in shells, headers or heads except as otherwise provided in 4-4-1A1/7.1.2. Openings and reinforcements for pressure vessels shall be designed in accordance with 4-4-1A1/7.1 through 4-4-1A1/7.11 of this section. Design requirements in these sections cover general requirements, reinforcement requirements, reinforcement limits, metal having reinforcement value, strength of reinforcement, and reinforcement of multiple openings.	

ITEM NO.	SWBS NO.	SWBS TITLE AND TOPIC	STANDARD	AMPLIFICATION OF STANDARD	REMARKS
493	505	General Requirements for Piping Systems – Pressure Vessel Permissible Material	ABS 4-4-1/3.1.1	Pressure parts of boilers and pressure vessels are to be constructed of materials conforming to specifications permitted by the applicable boiler or pressure vessel code. Boiler and pressure vessel material specifications provided in Section 2-3-1 may be used in connection with the provisions of Appendix 4-4-1A1. Materials for non-pressure parts are to be of a weldable grade (to be verified by welding procedure qualification, for example) if such parts are to be welded to pressure parts.	
494	505	General Requirements for Piping Systems – Pressure Vessel Permissible Material	ABS 4-4-1/3.1.2	Materials of pressure parts subjected to service temperatures higher than room temperature are to have mechanical and metallurgical properties suitable for operating under stress at such temperatures. Material specifications concerned are to have specified mechanical properties at elevated temperatures, or alternatively, the application of the materials are to be limited by allowable stresses at elevated temperatures as specified in the applicable boiler or pressure vessel standard.	
495	505	General Requirements for Piping Systems – Pressure Vessel Permissible Material	ABS 4-4-1/3.1.3	Materials of pressure parts subjected to low service temperatures are to have suitable notch toughness properties. Permissible materials, the allowable operating temperatures, the tests that need be conducted and the corresponding toughness criteria are to be as specified in the applicable pressure vessel standard.	
496	505	General Requirements for Piping Systems – Pressure Vessel Permissible Welding Consumables	ABS 4-4-1/3.3	Welding consumables are to conform to recognized standards. Welding consumables tested, certified and listed by the Bureau in its publication *Approved Welding Consumables* for meeting a standard may be used in all cases. See Section 2-4-3.	

ITEM NO.	SWBS NO.	SWBS TITLE AND TOPIC	STANDARD	AMPLIFICATION OF STANDARD	REMARKS
497	505	General Requirements for Piping Systems – Pressure Vessel Plan Approval	CFR, Title 46, Sec. 54.01-18, October 2000	Manufacturers intending to fabricate pressure vessels, heat exchangers, evaporators, and similar appurtenances, covered by the regulations in this part shall submit detailed plans in accordance with subpart 50.20 of this subchapter. The following information shall be submitted: (1) calculations for all pressure containment components including the maximum allowable working pressure, the hydrostatic or pneumatic test pressure, and the intended safety device setting, (2) joint design and methods of attachment of all pressure containment components, (3) foundations and supports (design and attachment), (4) pertinent calculations for pressure vessel foundations and/or supports, (5) a bill of material meeting the requirements of section VIII of the ASME Code, as modified by this part, and (6) a diagrammatic arrangement drawing of the assembled unit indicating location of internal and external components.	
498	505	General Requirements for Piping Systems – Pressure Vessel Plate and Pipe Thickness Tolerance	ABS 4-4-1A1/1.7	Plate and pipes are to be ordered not thinner than design thickness. Vessels made of plate furnished with mill under tolerance of not more than the smaller value of 0.25 mm (0.01 in) or 6% of the ordered thickness may be used at the full design pressure for the thickness ordered.	
499	505	General Requirements for Piping Systems – Pressure Vessel Plate Minimum Thickness	ABS 4-4-1A1/3.5.3	Plates are not to be less than 2.4 mm (3 /32 in) thick after forming and without allowance for corrosion.	
500	505	General Requirements for Piping Systems – Pressure Vessel Pneumatic Test	CFR, Title 46, Sec. 54.10-15, October 2000	Pneumatic testing of welded pressure vessels shall be permitted only for those units which are so designed and/or supported that they cannot be safely filled with water, or for those units which cannot be dried and are to be used in a service where traces of the testing medium cannot be tolerated.	

ITEM NO.	SWBS NO.	SWBS TITLE AND TOPIC	STANDARD	AMPLIFICATION OF STANDARD	REMARKS
			CFR, Title 46, Sec. 54.10-15, October 2000 (cont'd)	Except for enameled vessels, for which the pneumatic test pressure shall be at least equal to, but need not exceed, the maximum allowable working pressure to be marked on the vessel, the pneumatic test pressure shall be at least equal to 1.25 times the maximum allowable working pressure to be stamped on the vessel multiplied by the lowest ratio (for the materials of which the vessel is constructed) of the stress value "S" for the test temperature of the vessel to the stress value "S" for the design temperature (see UG-21 of the ASME Code). In no case shall the pneumatic test pressure exceed 1.25 times the basis for calculated test pressure as defined in UA-60(e) of the ASME Code. The pneumatic test of pressure vessels shall be accomplished as described in Sec. 54-10-15(d). Pressure vessels pneumatically tested shall also be leak tested.	
501	505	General Requirements for Piping Systems – Pressure Vessel Preheat and Postweld Heat Treatment	ABS 4-4-1/7.9	Preheat and postweld heat treatment are to be in accordance with 2-4-2/11 through 2-4-2/17 or the applicable standard or code. All Group I boilers and pressure vessels are to be postweld heat-treated (See 4-4-1/1.9). In addition, postweld heat treatment is to be carried out where required by, and in accordance with the applicable boiler or pressure vessel code or standard. Postweld heat treatment procedure is to be submitted to the Surveyor for review prior to the heat treatment.	
502	505	General Requirements for Piping Systems – Pressure Vessel Preheat and Postweld Heat Treatment	ABS 4-4-1A1/7	Preheat and postweld heat treatments are to be in accordance with Section 2-4-2/11 through 2-4-2/21.	

ITEM NO.	SWBS NO.	SWBS TITLE AND TOPIC	STANDARD	AMPLIFICATION OF STANDARD	REMARKS
503	505	General Requirements for Piping Systems – Pressure Vessel Pressure Relief Devices	CFR, Title 46, Sec. 54.15-1, October 2000	All pressure vessels built in accordance with applicable requirements in Division 1 of section VIII of the ASME Code must be provided with protective devices as indicated in UG-125 through UG-136 except as noted otherwise in this subpart. The markings shall be in accordance with this chapter for devices covered by Sec. 54.15-10.	
504	505	General Requirements for Piping Systems – Pressure Vessel Production Toughness Testing	CFR, Title 46, Sec. 54.05-16, October 2000	For vessels of welded construction, production toughness test plates shall be prepared for each 50 feet of longitudinal and circumferential butt weld in each Class I-L vessel, or for each 150 feet in each Class II-L vessel, except for material other than stainless steel that is exempted from impact test requirements by this subchapter. For vessels not exceeding 5 cubic feet in volume, one set of impact specimens, or two drop-weight specimens, as applicable according to the test used in procedure qualification, may represent all vessels from the same heat of material not in excess of 100 vessels, or one heat-treatment furnace batch. For several vessels or parts of vessels being welded in succession, the plate thickness of which does not vary by more than one-fourth inch, and which are made of the same grade of material, a test plate shall be furnished for each 50 feet of welding for Class I-L vessels or 150 feet of welding for Class II-L vessels. The test plates and any other test material from which toughness test specimens are cut shall be given the same heat-treatment as the production material they represent.	

ITEM NO.	SWBS NO.	SWBS TITLE AND TOPIC	STANDARD	AMPLIFICATION OF STANDARD	REMARKS
505	505	General Requirements for Piping Systems – Pressure Vessel Protective Devices	CFR, Title 46, Sec. 54.15-5, October 2000	All pressure vessels must be provided with protective devices. The protective devices must be in accordance with the requirements of UG-125 through UG-136 of the ASME Code except as modified in this subpart. An unfired steam boiler evaporator or heat exchanger (see Sec. 54.01-10) shall be equipped with protective devices as required by Sec. 54.15-15. All pressure vessels other than unfired steam boilers shall be protected by pressure-relieving devices that will prevent the pressure from rising more than 10 percent above the maximum allowable working pressure, except when the excess pressure is caused by exposure to fire or other unexpected source of heat.	
506	505	General Requirements for Piping Systems – Pressure Vessel Radiography	CFR, Title 46, Sec. 54.25-8, October 2000	Full radiography is required for all Class I and Class I-L vessels regardless of thickness. (Refer to Table 54.01-5(b) for applicable requirements.) Class II-L vessels shall be spot radiographed. The exemption provided in UW-11(c) of the ASME Code does not apply. (Refer to Table 54.01-5(b) for applicable requirements.) Each butt welded joint in a Class II or III pressure vessel cargo tank must be spot radiographed, in accordance with UW-52, regardless of diameter or thickness, and each weld intersection or crossing must be radiographed for a distance of at least 10 thicknesses from the intersection.	
507	505	General Requirements for Piping Systems – Pressure Vessel Relief Valves	ABS 4-4-1/17.1	Every pressure vessel and each chamber of every heat exchanger which can be subjected to a pressure greater than its design pressure is to be fitted with a pressure relief valve of suitable capacity.	

ITEM NO.	SWBS NO.	SWBS TITLE AND TOPIC	STANDARD	AMPLIFICATION OF STANDARD	REMARKS
			ABS 4-4-1/17.1 (cont'd)	The relief valve is to be set at not more than the maximum allowable working pressure and is to be sized to prevent the pressure in the vessel from rising more than 10% or 0.21 bar (0.21 kgf/cm 2, 3 psi), whichever is greater, above the maximum allowable working pressure.	
508	505	General Requirements for Piping Systems – Pressure Vessel Relief Devices	CFR, Title 46, Sec. 54.15-15, October 2000	An approved safety valve set to relieve at a pressure not exceeding the ``maximum allowable working pressure" of the shell shall be fitted to all unfired steam boilers and evaporators except for evaporators of the atmospheric type designed for vapor discharge direct to a distiller with no shutoff valve in the discharge line. Safety valves for use on pressure vessels in which steam or pressure is generated shall comply with the requirements of Sec. 54.15- 10. Rupture discs used in lieu of these safety valves, as provided for in paragraph (a) of this section, shall comply with the requirements of Sec. 54.15-13. The relieving capacity of safety valves on unfired steam boilers shall not be less than the maximum generating capacity of the unfired steam boiler as certified by the manufacturer. A heat exchanger with liquid in the shell and the heating medium in the tubes or coils shall be fitted with a liquid relief valve meeting the requirement of Sec. 54.15-5. A heat exchanger with steam in the shell and liquid in the tubes or coils at a pressure exceeding that in the shell shall have a liquid relief valve fitted to protect the shell against excess pressure. The discharge capacity of such relief valves shall be calculated on the basis of the discharge from one tube using the difference in pressures between that in the shell and that in the tubes and shall	

ITEM NO.	SWBS NO.	SWBS TITLE AND TOPIC	STANDARD	AMPLIFICATION OF STANDARD	REMARKS
			CFR, Title 46, Sec. 54.15-15, October 2000 (cont'd)	be not less than that determined by the formula given in Sec. 54.15-15(g)(2).	
509	505	General Requirements for Piping Systems – Pressure Vessel Requirements for Post-weld Heat Treatment	CFR, Title 46, Sec. 54.25-7, October 2000	Postweld heat treatment is required for all carbon and low alloy steel Class I, I-L, and II-L vessels regardless of thickness. (Refer to Table 54.01-5(b) for applicable requirements.)	
510	505	General Requirements for Piping Systems – Pressure Vessel Rules for Design	ABS 4-4-1A1/1.1	The requirements in this section apply to the design and fabrication of boilers and pressure vessels. They are based on ASME Boiler and Pressure Vessel Code Section I and Section VIII Div. 1. As an alternative to these requirements, codes and standards indicated in 4-4-1/1.5 may be used.	
511	505	General Requirements for Piping Systems – Pressure Vessel Rupture Disks	CFR, Title 46, Sec. 54.15-13, October 2000	Paragraph UG-127 of the ASME Code provides for the use of rupture disks in series with spring-loaded safety or relief valves. For certain pressure vessels containing substances which may render a relief or safety valve inoperative, or where the installation of a valve is considered impractical, the Commandant may authorize or require the use of a rupture disk in parallel with or in lieu of a spring loaded safety or relief valve. These rupture disks shall be in accordance with Sect. 54.15-13(b). All disks shall be oriented so that if rupture occurs, the disk fragments and pressure vessel discharge will be directed away from operating personnel and vital machinery.	
512	505	General Requirements for Piping Systems – Pressure Vessel Safety and Relief Valves	CFR, Title 46, Sec. 54.15-10, October 2000	All safety and relief valves for use on pressure vessels or piping systems shall be designed to meet the protection and service requirements for which they are intended and shall be set to relieve at a pressure which does not exceed the ``maximum allowable working pressure" of the pressure vessel or piping	

ITEM NO.	SWBS NO.	SWBS TITLE AND TOPIC	STANDARD	AMPLIFICATION OF STANDARD	REMARKS
			CFR, Title 46, Sec. 54.15-10, October 2000 (cont'd)	system. Pilot-valve control or other indirect operation of safety valves is not permitted unless the design is such that the main unloading valve will open automatically at not over the set pressure and will discharge its full rated capacity if some essential part of the pilot or auxiliary device should fail. All other safety and relief valves shall be of the direct spring-loaded type. Safety and relief valves for steam or air service shall be provided with a substantial lifting device so that the disk can be lifted from its seat when the pressure in the vessel is 75 percent of that at which the valve is set to blow. Safety and relief valves for service other than steam and air need not be provided with a lifting device although a lifting device is desirable if the vapors are such that their release will not create a hazard. If the design of a safety or relief valve is such that liquid can collect on the discharge side of the disk, the valve shall be equipped with a drain at the lowest point where liquid can collect Cast iron may be employed in the construction of relief valves for pressures not exceeding 125 pounds per square inch and temperatures not exceeding 450 deg. F. Seats or disks of cast iron are prohibited. The spring in a relief valve in service for pressures up to and including 250 pounds per square inch shall not be reset for any pressure more than 10 percent above or 10 percent below that for which the relief valve is marked. For higher pressures, the spring shall not be reset for any pressure more than 5 percent above or 5 percent below that for which the relief valve is marked. The rated relieving capacity of safety and relief valves for use on	

ITEM NO.	SWBS NO.	SWBS TITLE AND TOPIC	STANDARD	AMPLIFICATION OF STANDARD	REMARKS
			CFR, Title 46, Sec. 54.15-10, October 2000 (cont'd)	pressure vessels shall be based on actual flow test data and the capacity shall be certified by the manufacturer in accordance with one of the following: (1) 120 percent of the valve set pressure for valves rated in accordance with Compressed Gas Association Standard S-1.2.5.2. (2) 110 percent of the valve set pressure for valves rated in accordance with UG-131 of section VIII of the ASME Code. (3) 103 percent of the valve set pressure for steam in accordance with PG-69 of the ASME Code.	
513	505	General Requirements for Piping Systems – Pressure Vessel Seating Arrangement	ABS 4-4-1/19.1	Boilers, pressure vessels and other pressurized or fired equipment is to be properly secured in position on supports constructed in accordance with approved plans.	
514	505	General Requirements for Piping Systems – Pressure Vessel Shell Design	ABS 4-4-1A1/3.1	Seamless and fusion-welded shells are to be in accordance with of the equations in this section. The equations to be used are subject to 4-4-1A1/3.5 for pressure vessel shells.	
515	505	General Requirements for Piping Systems – Pressure Vessel Shipboard Trials	ABS 4-4-1/19.7.2	Pressure vessels and heat exchanges are to be functionally tested with the systems in which they form a part.	
516	505	General Requirements for Piping Systems – Pressure Vessel Shop Inspections and Plan Approvals	CFR, Title 46, Sec. 54.01-15, October 2000	The following classifications are exempt from shop inspection and plan approval requirements of this part: (1) vessels containing water at a pressure not greater than 100 pounds per square inch gage, nor a temperature above 200 deg. F., including those containing air, the compression of which serves only as a cushion, (2) vessels having an internal operating pressure not exceeding 15 pounds per square inch gage with no limitation on size. (See UG-28(e) of the ASME Code, (3) class I, II, and III pressure vessels that meet the requirements of Sec. 54.01-5(c)(3) and (c)(4), and (4) condensers and heat exchangers, regardless of size, where the design is such that the liquid phase is not greater than 100 pounds per square inch gage and 200 deg. F. and the vapor phase is not greater than 15 pounds per square inch gage provided system over pressure conditions are considered.	

ITEM NO.	SWBS NO.	SWBS TITLE AND TOPIC	STANDARD	AMPLIFICATION OF STANDARD	REMARKS
517	505	General Requirements for Piping Systems – Pressure Vessel Standard Hydrostatic Test	CFR, Title 46, Sec. 54.10-10, October 2000	All pressure vessels shall satisfactorily pass the hydrostatic test prescribed by this section, except those pressure vessels noted under Sec. 54.10-15(a).	
518	505	General Requirements for Piping Systems – Pressure Vessel Steel Plates	CFR, Title 46, Sec. 54.25-3, October 2000	The steels listed in UCS-6(b) and UCS-6(c) of the ASME Code will be allowed only in Class III pressure vessels (see Table 54.01-5(b)).	
519	505	General Requirements for Piping Systems – Pressure Vessel Toughness Tests	CFR, Title 46, Sec. 54.05-1, October 2000	The toughness tests of materials used in pressure vessels shall be as required by this subpart in lieu of requirements in UG-84 of the ASME Code.	
520	505	General Requirements for Piping Systems – Pressure Vessel Toughness Test Certification	CFR, Title 46, Sec. 54.05-10, October 2000	Certification of material toughness tests for plate material, pipe and tubing material, forgings and forged or rolled fittings, bars and shapes, rolled or forged, castings, and small parts will be conducted in accordance with Sec. 54.05-10(a) through (f).	
521	505	General Requirements for Piping Systems – Pressure Vessel Toughness Tests	CFR, Title 46, Sec. 54.05-3, October 2000	Where material or welding toughness tests are required by Sec. 54.25-10, 54.25-15, 54.25-20, and subpart 57.03 or 57.06 of this subchapter, the following requirements shall apply: (1) additional requirements for ferritic steels with properties enhanced by heat treatment are in Sec. 54.25-20, (2) certified reports of toughness tests by the material manufacturer will be acceptable evidence provided the specimens taken are representative of the material delivered and that the material is not subject to treatment during or following fabrication that will reduce its impact properties. If such treatment is subsequently applied to the material, test specimens shall be so taken and treated as to be representative of the material in the finished vessel.	
522	505	General Requirements for Piping Systems – Pressure Vessel Toughness Test Specimens	CFR, Title 46, Sec. 54.05-5, October 2000	Charpy V-notch impact tests, where required, will be conducted in accordance with Sec. 54.05-5(a) and with ASTM Specification E-23, ``Notched Bar Impact Testing of Metallic Materials", using the Type A specimen shown in Figure 4 of the specification.	

ITEM NO.	SWBS NO.	SWBS TITLE AND TOPIC	STANDARD	AMPLIFICATION OF STANDARD	REMARKS
			CFR, Title 46, Sec. 54.05-5, October 2000 (cont'd)	Drop weight tests, where required, will be conducted no-break performance in accordance with Sec. 54.05-5(b) and with ASTM Specification E-208, ''Conducting Drop-Weight Test to Determine Nil-Ductility Transition Temperature of Ferritic Steels". Retest and alternative test procedures will be conducted in accordance with Sec. 54.05-5(c) and Sec. 54.05-5(d), respectively.	
523	505	General Requirements for Piping Systems – Pressure Vessel Toughness Test Temperatures	CFR, Title 46, Sec. 54.05-6, October 2000	Each toughness test must be conducted at temperatures not warmer than -20 deg. F or 10 deg. F below the minimum service temperature, whichever is lower, except that for service at or below -320 deg. F, the tests may be conducted at the service temperature in accordance with Sec. 54.25-10(a)(2).	
524	505	General Requirements for Piping Systems – Pressure Vessel Unstayed Heads	ABS 4-4-1A1/3.5.4	Torispherically and hemispherically dished heads, ellipsoidal heads, heads with access openings, unstayed flat heads, and stayed flat heads shall be designed in accordance with 4-4-1A1/5.1 through 4-4-1A1/5.9 of this section. Design requirements in these sections cover the minimum thickness, dish radius, knuckle radius, maximum allowable working pressure, joint efficiency, and corrosion allowance.	
525	505	General Requirements for Piping Systems – Pressure Vessel Weld Joint Efficiency	ABS 4-4-1A1/3.5.4	Efficiencies for welded unfired pressure vessels are to be determined from 4-4-1A1/Table 1. For Group I pressure vessels, longitudinal and circumferential weld seams of shell are to be accomplished by double-welded butt type, or equivalent, and are to be examined for their full length by radiography.	

ITEM NO.	SWBS NO.	SWBS TITLE AND TOPIC	STANDARD	AMPLIFICATION OF STANDARD	REMARKS
526	505	General Requirements for Piping Systems – Pressure Vessel Weld Tests	ABS 4-4-1A1/7	Welding procedure and welder/welding operator qualification tests are to be in accordance with Section 2-4-3.	
527	505	General Requirements for Piping Systems – Pressure Vessel Weld Toughness Test Acceptance Criteria	CFR, Title 46, Sec. 54.05-17, October 2000	For Charpy V-notch impact tests the energy absorbed in both the weld metal and heat affected zone impact tests in weld qualification and production shall meet the requirements of Sec. 54.05(a). For drop-weight tests both specimens from each required set shall exhibit a no-break performance.	
528	505	General Requirements for Piping Systems – Pressure Vessel Welded Fabrication	ABS 4-4-1/7.3	Welding of pressure parts and of non-pressure parts to pressure parts are to be performed by means of qualified welding procedures and by qualified welders. The qualification of welding procedures is to be conducted in accordance with Section 2-4-3 or the applicable boiler or pressure vessel standard or code. Welding procedure specifications and their qualification records are to be submitted for review as indicated in 4-4-1/1.13.5.	
529	505	General Requirements for Piping Systems – Pressure Vessel Welding Qualification Tests and Production Testing	CFR, Title 46, Sec. 54.20-5, October 2000	Performance and procedure qualification. No production welding shall be done until welding procedures and welders have been qualified in accordance with part 57 of this subchapter. Production tests are required in accordance with Sec. 57.06-1 of this subchapter.	
530	505	General Requirements for Piping Systems – Pressure Vessel Welding of Quenched and Tempered Steels	CFR, Title 46, Sec. 54.25-25, October 2000	The welding requirements in UHT-82 of the ASME Code shall be modified to require that the qualification of welding procedures and welders and weld production testing shall conform to the requirements of part 57 of this subchapter. The requirements are Sec. 57.03-1(d) of this subchapter are applicable to welded pressure vessels and nonpressure vessel type tanks of quenched and tempered steels other than 9 percent nickel.	

ITEM NO.	SWBS NO.	SWBS TITLE AND TOPIC	STANDARD	AMPLIFICATION OF STANDARD	REMARKS
531	505	General Requirements for Piping Systems – Pressure Vessel Weldment Toughness Tests	CFR, Title 46, Sec. 54.05-15, October 2000	Plate material for which Charpy V-notch impact testing is required in the parent material and for which V-notch minima are specified shall similarly have welding procedures qualified for toughness by Charpy V- notch testing. The number of test specimens and the location of their notches shall be as shown in Figure 54.05-15(a) and as described in paragraph (a) (1) through (5) of this section. Plate materials for which Charpy V-notch minimums are not specified, or for which a Charpy V-notch correlation with NDT is not known, and which are themselves tested for toughness by the drop-weight procedure, shall have welding procedures similarly qualified by the drop-weight test. Piping welding toughness tests shall be qualified, by making Charpy V-notch impact tests as prescribed in paragraph (a) of this section. Materials that are specially approved based on toughness criteria or tests, other than those discussed in paragraph (a) and (b) of this section shall have welding procedures tested and qualified for toughness as deemed appropriate and necessary by the Commandant. In the case of stainless steels, weld procedure toughness tests may be limited to weld metal only if this is all that is required by Sec. 54.25-15.	
532	505	General Requirements for Piping Systems – Pressure Vessels and Power Piping	ASME Boiler and Pressure Vessel Codes	Fuel cell power plants employing pressure vessels or power piping shall be subject to these codes and standards as well as regular inspections of system components.	

ITEM NO.	SWBS NO.	SWBS TITLE AND TOPIC	STANDARD	AMPLIFICATION OF STANDARD	REMARKS
533	505	General Requirements for Piping Systems – Pressure Vessels at Low Temperature Operation	CFR, Title 46, Sec. 54.03-5, October 2000	The pressure vessels for low temperature operation shall be as required by section VIII of the ASME Code as modified by this subpart and will meet the requirements of Sec. 54.05-1.	
534	505	General Requirements for Piping Systems – Pressure Vessels Constructed With Carbon, Alloy, and Heat Treated Steels	CFR, Title 46, Sec. 54.25-1, October 2000	The carbon, alloy, and heat-treated steels used in construction of pressure vessels and parts shall be as indicated in section VIII of the ASME Code except as noted otherwise in this subpart.	
535	505	General Requirements for Piping Systems – Protection from Mechanical Damage	ABS 4-6-2/9.1	All piping located in a position where it is liable to mechanical damage is to be protected. The protective arrangements are to be capable of being removed to enable inspection.	
536	505	General Requirements for Piping Systems – Protection from Overpressure	ABS 4-6-2/9.9	Each piping system, or part of a system, which may be exposed to a pressure greater than that for which it is designed, is to be protected from over pressurization by a relief valve. Other protective devices, such as bursting disks, may be considered for some systems. Where only centrifugal pumps serve systems, such that the pressure delivered by the pump cannot exceed the design pressure of the piping, relief valves are not necessary. For systems conveying flammable liquids or gases, relief valves are to be arranged to discharge back to the suction side of the pump or to a tank. Relief valves are to be set at not exceeding the piping design pressure. For hydraulic system, see 4-6-7/3.7.2. A pressure vessel, which can be isolated from piping system relief valves, is to have another relief valve fitted either directly on the pressure vessel or between the pressure vessel and the isolation valve.	

ITEM NO.	SWBS NO.	SWBS TITLE AND TOPIC	STANDARD	AMPLIFICATION OF STANDARD	REMARKS
537	505	General Requirements for Piping Systems – Protection of Electrical Equipment	ABS 4-6-2/9.3	The routing of pipes in the vicinity of switchboards and other electrical equipment is to be avoided as far as possible.	
538	505	General Requirements for Piping Systems – Provisions for Expansion and Contraction of Piping	ABS 4-6-2/9.5	Provision is to be made to take care of expansion and contraction of piping due to temperature and pressure variations as well as working of the hull. Suitable provisions include, but are not limited to piping bends, elbows, offsets, changes in direction of the pipe routing, or expansion joints. Where expansion joints are used, the adjoining pipes are to be adequately supported and aligned.	
539	505	General Requirements for Piping Systems – Resistance Testing	ABS 4-6-2/7.5	Piping required by 4-6-2/9.15 to be electrically earthed (grounded) to the hull, are to be checked in the presence of the Surveyor to ensure that the resistance from any point along the piping to the hull does not exceed 1 M. Where bonding straps are used, they are to be located in visible locations.	
540	505	General Requirements for Piping Systems – Rights of Access	CFR, Title 46, Sec. 56.95-5, October 2000	Marine inspectors shall have rights of access to any place where work concerned with the piping is being performed. This includes manufacture, fabrication, assembly, erection, and testing of the piping or system components. Marine inspectors shall have access to review all certifications or records pertaining to the inspection requirements of Sec. 56.95-1, including certified qualifications for welders, welding operators, and welding procedures.	
541	505	General Requirements for Piping Systems – Safety and Relief Valve Escape Piping	CFR, Title 46, Sec. 56.50-25, October 2000	Escape piping from safety valves shall have an area of not less than that of the combined areas of the outlets of all valves discharging thereto and shall be led as near vertically as practicable to the atmosphere. Expansion joints or flexible pipe connections shall be fitted in escape piping. The piping shall be adequately supported and	

ITEM NO.	SWBS NO.	SWBS TITLE AND TOPIC	STANDARD	AMPLIFICATION OF STANDARD	REMARKS
			CFR, Title 46, Sec. 56.50-25, October 2000 (cont'd)	installed so that no stress is transmitted to the safety valve body. Safety or relief valve discharges, when permitted to terminate in the machinery space, shall be led below the floor plates or to a remote position to minimize the hazardous effect of the escaping steam. The effect of the escape piping on the operation of the relief device shall be considered. The backpressure in the escape piping from the main propulsion steam generator should not exceed 10 percent of the relief device setting unless a compensated relief device is used.	
542	505	General Requirements for Piping Systems – Selection and Limitation of Components	CFR, Title 46, Sec. 56.10-1, October 2000	Pipe, tubing, pipe joining fittings, and piping system components, shall meet material and standard requirements of subpart 56.60 and shall meet the certification requirements of part 50 of this subchapter.	
543	505	General Requirements for Piping Systems – Sensing Devices for Tanks	ABS 4-6-2/9.11.3	Pressure, temperature and level sensing devices installed in tanks at locations where they are subjected to a static head of liquid are to be fitted with valves or arranged such that they may be removed without emptying the tank.	
544	505	General Requirements for Piping Systems – Shell Connections	ABS 4-6-2/9.13	Positive closing valves are to be fitted at the shell at inlets and discharges. Shell valves and connections shall comply with the requirements in 4-6-2/9.13.2 and 4-6-2/9.13.3, respectively.	
545	505	General Requirements for Piping Systems - Shell Penetrations	USCG Cutter Certification Plan, Sort #753, December 2000	Design requirements pertaining to specific systems are addressed.	

ITEM NO.	SWBS NO.	SWBS TITLE AND TOPIC	STANDARD	AMPLIFICATION OF STANDARD	REMARKS
546	505	General Requirements for Piping Systems – Sounding Devices	CFR, Title 46, Sec. 56.50-90, October 2000	Each tank must be provided with a suitable means of determining liquid level. Each integral hull tank and compartment, unless at all times accessible while the vessel is operating, must be fitted with a sounding pipe. Other oil- level gauges may be used instead of sounding pipes if all the following requirements listed in paragraph (d) are met. Where sounding pipes terminate below the freeboard deck on cargo vessels, they shall be fitted with gate valves. No sounding pipe used in a fuel-oil tank may terminate in any space where the risk of ignition of spillage from the pipe might arise. None may terminate in a space for passengers or crew. Termination in a machinery space shall be avoided when at all possible.	
547	505	General Requirements for Piping Systems – Special Gaging Requirements	CFR, Title 46, Sec. 56.50-10, October 2000	Where pressure-reducing valves are employed (see 102.2.5(b) of ANSI-B31.1) a pressure gage shall be provided on the low-pressure side of the reducing station. Fuel oil service and fuel oil transfer pumps must be provided with a pressure gage on the discharge side of the pump.	
548	505	General Requirements for Piping Systems – Special Purpose Fittings	CFR, Title 46, Sec. 56.15-10, October 2000	Special purpose fittings certified in accordance with subpart 50.25 of this subchapter are acceptable for use in piping systems and shall meet the requirements of this section.	
549	505	General Requirements for Piping Systems – Steam and Exhaust Piping	CFR, Title 46, Sec. 56.50-15, October 2000	The design pressures of the steam piping shall not be less than the lowest pressure setting of any system safety valve. The value of allowable stress for the material shall not exceed that corresponding to the saturated steam temperature at system pressure and shall be selected as described in Sec. 56.07-10(e). Steam stop valves in sizes exceeding 6 inches shall be fitted with	

ITEM NO.	SWBS NO.	SWBS TITLE AND TOPIC	STANDARD	AMPLIFICATION OF STANDARD	REMARKS
			CFR, Title 46, Sec. 56.50-15, October 2000 (cont'd)	bypasses for heating the line and equalizing the pressure before the valve is opened. Where positive shutoff valves are fitted in the exhaust lines of machinery, and the exhaust side is not designed for the full inlet pressure, the exhaust side must be protected from over pressure by one of the following means listed in paragraph (c) of this section. Means must be provided for draining every steam pipe in which dangerous water hammer might otherwise occur.	
550	505	General Requirements for Piping Systems – Steam Generating Pressure Vessels	CFR, Title 46, Sec. 54.01-10, October 2000	Unfired steam boilers must be fitted with an efficient water level indicator, a pressure gage, a blow-down valve, and an approved safety valve as required by Sec. 54.15-15. Unfired steam boilers must be constructed in accordance with this part other than when the pressures are more than 206 kPa (30 psig) or the temperatures of the working fluid are more than 454 deg. C (850 deg. F) when such boilers must be constructed in accordance with part 52 of this subchapter. Vessels known as ``Evaporators" or ``Heat Exchangers" are not classified as unfired steam boilers. They shall be fitted with an approved safety device as required under Sec. 54.15-15 and constructed in accordance with this part. An evaporator, in which steam is generated, is to be fitted with an efficient water level indicator, a pressure gage, and a blow-down valve.	
551	505	General Requirements for Piping Systems – Steam Pipe Systems	SOLAS Part C, Reg. 33.1	Every steam pipe and every fitting connected thereto through which steam may pass shall be so designed, constructed and installed as to withstand the maximum working stress to which it may be subjected.	

ITEM NO.	SWBS NO.	SWBS TITLE AND TOPIC	STANDARD	AMPLIFICATION OF STANDARD	REMARKS
552	505	General Requirements for Piping Systems – Steam Pipe Systems	SOLAS Part C, Reg. 33.2	Means shall be provided for draining every steam pipe in which dangerous water hammer action might otherwise occur.	
553	505	General Requirements for Piping Systems – Steam Pipe Systems	SOLAS Part C, Reg. 33.3	If a steam pipe or fitting may receive steam from any source at a higher pressure than that for which it is designed a suitable reducing valve, relief valve and pressure gauge shall be fitted.	
554	505	General Requirements for Piping Systems – Steel (High Temperature Applications)	CFR, Title 46, Sec. 56.60-5, October 2000	Upon prolonged exposure to temperatures above 775 deg. F., the carbide phase of plain carbon steel, plain nickel alloy steel, carbon-manganese alloy steel, manganese-vanadium alloy steel, and carbon-silicon steel may be converted to graphite. Upon prolonged exposure to temperatures above 875 deg. F., the carbide phase of alloy steels, such as carbon- molybdenum, manganese-molybdenum-vanadium, manganese-chromium-vanadium and [[Page 219]] chromium-vanadium, may be converted to graphite. The design temperature of a piping system employing one or more of the materials listed in paragraphs (a), (b), and (c) of this section shall not exceed the lowest graphitization temperature specified for materials used.	
555	505	General Requirements for Piping Systems – Structural Requirements	GENSPEC, Sect. 505d, 1995 Edition	General structural requirements, as well as those for flexibility, shall be in accordance with this section.	
556	505	General Requirements for Piping Systems – System Design Requirements	GENSPEC, Sect. 505b, 1995 Edition	System design requirements are specified for the following: environmental conditions, velocity limits, corrosion and erosion precautions, equipment and system isolation and damage control pressure-reducing stations, relief valve setting and installation pressure, temperature, level, and flow control, remote valve operation, sea connections, and criteria for pressure design of piping.	GENSPEC Section 505 is an extensive document and is briefly summarized herein given the extensive treatment of piping system requirements by other regulatory bodies presented herein.

ITEM NO.	SWBS NO.	SWBS TITLE AND TOPIC	STANDARD	AMPLIFICATION OF STANDARD	REMARKS
557	505	General Requirements for Piping Systems - System Isolation and Damage Control Requirements	USCG Cutter Certification Plan, Sort #746, December 2000	Specifies requirements for equipment and system isolation and damage control requirements.	
558	505	General Requirements for Piping Systems – Systems Containing Oil	CFR, Title 46, Sec. 56.50-60, October 2000	Fuel tanks, fill pipes and shut-off valves must be in accordance with paragraph (a) through (h) of this section. Oil piping drains, strainers and other equipment subject to normal oil leakage must be fitted with drip pans or other means to prevent oil draining into the bilge.	
559	505	General Requirements for Piping Systems – Tank Draining	ABS 4-6-4/1.3	All vessels are to be provided with effective means of pumping out or draining tanks.	
560	505	General Requirements for Piping Systems – Tank Sounding	ABS 4-6-4/11	These requirements apply to the provision of means of sounding for liquid and void tanks and for normally dry but not easily accessible compartments. The means of sounding covered in this subsection include sounding pipes and gauge glasses. For level-indicating devices fitted to tanks containing flammable liquid, such as fuel oil, see 4-6-4/13.5.6(b). Remote tank level indicating systems are to be submitted for consideration in each case. All tanks, cofferdams, void spaces and all normally dry compartments, such as cargo holds, which are not easily accessible, and which have possibility of water accumulation (e.g. adjacent to sea, pipe passing through), are to be provided with means of sounding level of liquid present. In general, this means is to be a sounding pipe, which shall be in accordance to 4-6-4/11.3. Gauge glass, level indicating device, remote-gauging system, etc. may also be accepted as a means of sounding and shall be in accordance with 4-6-4/11.5 through 4-6-4/11.9.	

ITEM NO.	SWBS NO.	SWBS TITLE AND TOPIC	STANDARD	AMPLIFICATION OF STANDARD	REMARKS
561	505	General Requirements for Piping Systems – Tanks	ABS 4-6-4/1.1	Provisions of 4-6-4 apply to piping systems serving tanks including fuel oil storage and transfer systems and vent, overflow and sounding systems.	
562	505	General Requirements for Piping Systems – Temperature Sensing Devices	ABS 4-6-2/9.11.1	Where thermometers or other temperature sensing devices are fitted in piping systems, thermometer wells are to be used so that the devices can be removed without impairing the integrity of the pressurized system.	
563	505	General Requirements for Piping Systems – Tests	ABS 4-6-3/19	Piping systems are to be subjected to a hydrostatic test pressure of not less than 1.5 times the design pressure to the satisfaction of the Surveyor. For piping required to be electrically conductive, earthing is to be checked and random resistance testing is to be conducted to the satisfaction of the Surveyor.	
564	505	General Requirements for Piping Systems – Tests after Installation	ABS 4-6-2/7.3.3	All piping systems are to be tested under working conditions after installation. In addition, the following piping systems are to be hydrostatically tested as indicated in the table in 4-6-2/7.3.3. All tests are to be witnessed by the Surveyor.	
565	505	General Requirements for Piping Systems – Tests by the Manufacturer	ABS 4-6-3/13	Fire endurance testing of plastic piping in the dry condition (for Level 1 and Level 2) is required and shall be in accordance with 4-6-3/13.1 through 4-6-3/13.7 of this section.	
566	505	General Requirements for Piping Systems – Tests by the Manufacturer	ABS 4-6-3/15	Fire endurance testing of water filled plastic piping (Level 3) is required and shall be in accordance with 4-6-3/15.1 through 4-6-3/15.7 of this section.	
567	505	General Requirements for Piping Systems – Tests by the Manufacturer	ABS 4-6-3/17	Flame spread of plastic piping is to be determined by IMO Resolution A.653(16) Recommendation on Improved Fire Test Procedures for Surface Flammability of Bulkhead, Ceiling, and Deck Finish Materials as modified by this section.	

ITEM NO.	SWBS NO.	SWBS TITLE AND TOPIC	STANDARD	AMPLIFICATION OF STANDARD	REMARKS
568	505	General Requirements for Piping Systems – Threaded Joints	CFR, Title 46, Sec. 56.30-20, October 2000	Threaded joints may be used within the limitations specified in subpart 56.15 of this chapter and within other limitations specified in this section. All threads on piping components must be taper pipe threads in accordance with the applicable standard listed in Table 56.60-1(b). Threads other than taper pipe threads may be used for piping components where tightness of the joint depends on a seal weld or a seating surface other than the threads, and where experience or test has demonstrated that such threads are suitable. Threaded joints may not be used where severe erosion, crevice corrosion, shock, or vibration is expected to occur; or at temperatures over 925 deg. F. Size limitations are given in Table 56.30-20(c) of this section. Pipe with a wall thickness less than that of standard weight of ANSI B36.10 steel pipe must not be threaded regardless of service	
569	505	General Requirements for Piping Systems – Threaded Piping	CFR, Title 46, Sec. 56.90-10, October 2000	Any compound or lubricant used in threaded joints shall be suitable for the service conditions and shall not react unfavorably with either the service fluid or the piping materials. Threaded joints that are to be seal welded shall be made up without any thread compound. Backing off to permit alignment of pipe threaded joints shall not be permitted.	
570	505	General Requirements for Piping Systems – Type and Extent of Examinations Required	CFR, Title 46, Sec. 56.95-10, October 2000	The types and extent of nondestructive examinations required for piping must be in accordance with this section and Table 136.4 of ANSI-B31.1. In addition, a visual examination shall be made. Visual and nondestructive types of examinations shall be done in	

ITEM NO.	SWBS NO.	SWBS TITLE AND TOPIC	STANDARD	AMPLIFICATION OF STANDARD	REMARKS
			CFR, Title 46, Sec. 56.95-10, October 2000 (cont'd)	accordance with paragraph (b) and (c), respectively, of this section.	
571	505	General Requirements for Piping Systems - Unfired Pressure Vessels	USCG Cutter Certification Plan, Sort #767, December 2000	Specifies requirements for pressure vessels.	
572	505	General Requirements for Piping Systems - Unfired Pressure Vessels	USCG Cutter Certification Plan, Sort #768, December 2000	Specifies requirements for boiler and pressure vessels.	
573	505	General Requirements for Piping Systems - Unfired Pressure Vessels	USCG Cutter Certification Plan, Sort #769, December 2000	Specifies requirements for unfired pressure vessels.	
574	505	General Requirements for Piping Systems – Valve Bypasses	CFR, Title 46, Sec. 56.20-20, October 2000	Sizes of bypasses shall be in accordance with MSS-SP-45. Pipe for bypasses should be at least Schedule 80 seamless, and of a material of the same nominal chemical composition and physical properties as that used for the main line. Lesser thickness may be approved depending on the installation and service conditions. Bypasses may be integral or attached.	
575	505	General Requirements for Piping Systems – Valve Construction	CFR, Title 46, Sec. 56.20-9, October 2000	All valves must close with a right-hand (clockwise) motion of the handwheel or operating lever when facing the end of the valve stem. Gate, globe and angle valves must generally be of the rising-stem type, preferably with the stem threads external to the valve body. Where operating conditions will not permit such installations, the use of nonrising-stem valves will be permitted. Nonrising-stem valves, lever-operated valves, and any other valve where, due to design, the position of the disc or closure	

ITEM NO.	SWBS NO.	SWBS TITLE AND TOPIC	STANDARD	AMPLIFICATION OF STANDARD	REMARKS
			CFR, Title 46, Sec. 56.20-9, October 2000 (cont'd)	mechanism is not obvious shall be fitted with indicators to show whether the valve is opened or closed. Valves of Class I piping systems (for restrictions in other classes refer to sections on low temperature service), having diameters exceeding 2 inches must have bolted, pressure seal, or breech lock bonnets and flanged or welding ends, except that socket type welding ends shall not be used where prohibited by Sec. 56.30-5(c) of this part, Sec. 56.30-10(b)(4) of this part for the same pressure class, or elsewhere in this part. For diameters not exceeding 2 inches, screwed union bonnet or bolted bonnet, or bonnetless valves of a type which will positively prevent the stem from screwing out of the body may be employed. Outside screw and yoke design must be used for valves 3 inches and larger for pressures above 600 pounds per square inch gage. Cast iron valves with screwed-in or screwed-over bonnets are prohibited. Union bonnet type cast iron valves must have the bonnet ring made of steel, bronze, or malleable iron. Valves must be designed for the maximum pressure to which they may be subjected, but in no case shall the design pressure be less than 50 pounds per square inch gage. Disks or disk faces, seats, stems and other wearing parts of valves shall be made of material possessing corrosion and heat-resisting qualities suitable for the service conditions to which they may be subjected. Plug cocks shall be constructed with satisfactory and positive means of preventing the plug from becoming loosened or removed from the body when the plug is operated. Cocks shall be marked in a straight line with the body to indicate whether they are open or closed.	

ITEM NO.	SWBS NO.	SWBS TITLE AND TOPIC	STANDARD	AMPLIFICATION OF STANDARD	REMARKS
			CFR, Title 46, Sec. 56.20-9, October 2000 (cont'd)	Materials forming a portion of the pressure barrier shall comply with the applicable provisions of this part.	
576	505	General Requirements for Piping Systems – Valve Ends	CFR, Title 46, Sec. 56.20-7, October 2000	Valves may be used with flanged, threaded, butt welding, socket welding or other ends in accordance with applicable standards as specified in subpart 56.60.	
577	505	General Requirements for Piping Systems - Valve Locking Devices	USCG Cutter Certification Plan, Sort #771, December 2000	Specifies requirements for valve locking devices.	
578	505	General Requirements for Piping Systems – Valves	CFR, Title 46, Sec. 56.20-1, October 2000	Valves certified in accordance with subpart 50.25 of this subchapter are acceptable for use in piping systems. Non-welded valves complying with the standards listed in Sec. 56.60-1 of this part may be used within the specified pressure and temperature ratings of those standards, provided the limitations of Sec. 56.07-10(c) of this part are applied. Materials must comply with subpart 56.60 of this part. Welded valves complying with the standards and specifications listed in Sec. 56.60-1 of this part may be used in Class II systems only unless they meet paragraph (c) of this section. All other valves must meet the requirements of paragraph (c) of this section. Where liquid trapped in any closed valve can be heated and an uncontrollable rise in pressure can result, means must be provided in the design, installation, and operation of the valve to ensure that the pressure in the valve does not exceed that allowed by this part for the attained temperature.	

ITEM NO.	SWBS NO.	SWBS TITLE AND TOPIC	STANDARD	AMPLIFICATION OF STANDARD	REMARKS
579	505	General Requirements for Piping Systems – Valves Employing Resilient Material	CFR, Title 46, Sec. 56.20-15, October 2000	A valve in which the closure is accomplished by resilient nonmetallic material instead of a metal to metal seat shall comply with the design, material, construction and testing for valves specified in this part. Valves employing resilient material shall be divided into three categories, Positive shutoff, Category A, and Category B, and shall be tested and used in accordance with paragraph (b) of this section.	
580	505	General Requirements for Piping Systems – Welded Joints	CFR, Title 46, Sec. 56.30-5, October 2000	Welded joints may be used for materials for which welding procedures, welders, and welding machine operators have been qualified in accordance with part 57 of this subchapter. All butt, socket, fillet, and seal welds must be in accordance with paragraph (b) through (e) of this section.	
581	505	General Requirements for Piping Systems – Welding	CFR, Title 46, Sec. 56.70-1, October 2000	The following subpart generally applies to all types of welding, such as stud welding, casting repair welding and all processes of fabrication welding.	
582	505	General Requirements for Piping Systems – Welding Limitations	CFR, Title 46, Sec. 56.70-3, October 2000	Backing strips used at longitudinal welded joints must be removed.	
583	505	General Requirements for Piping Systems – Welding Material	CFR, Title 46, Sec. 56.70-5, October 2000	All filler metal, including consumable insert material, must comply with the requirements of section IX, ASME Boiler and Pressure Vessel Code and Sec. 57.02-4 of this subchapter. When metallic backing rings are used they shall be made from material of weldable quality compatible with the base metal, whether subsequently removed or not. When nonmetallic backing rings are used they shall be of material that does not deleteriously affect either base or weld metal, and shall be removed after	

ITEM NO.	SWBS NO.	SWBS TITLE AND TOPIC	STANDARD	AMPLIFICATION OF STANDARD	REMARKS
			CFR, Title 46, Sec. 56.70-5, October 2000 (cont'd)	welding is completed. Backing rings may be of the consumable insert type, removable ceramic type, of solid or split band type. A ferrous backing ring which becomes a permanent part of the weld shall not exceed 0.05 percent sulfur.	
584	505	General Requirements for Piping Systems – Welding Preparation	CFR, Title 46, Sec. 56.70-10, October 2000	Butt weld and fillet weld preparation shall be done in accordance with paragraphs (a) and (b), respectively, of this section.	
585	505	General Requirements for Piping Systems – Welding Procedures	CFR, Title 46, Sec. 56.70-15, October 2000	General welding procedures shall be done in accordance with paragraph (a) of this section. Welding procedures for girth butt welds, longitudinal butt welds, fillet welds, seal welds, weld defect repairs, welded branch connections and heat treating of welds shall be in accordance with paragraphs (b) through (h) of this section.	
586	505	General Requirements for Piping Systems – Welding Qualifications	CFR, Title 46, Sec. 56.70-20, October 2000	Qualification of the welding procedures to be used, and of the performance of welders and welding operators, is required, and shall comply with the requirements of the ASME Boiler and Pressure Vessel Code (section IX) except as modified by part 57 of this subchapter. Each butt-welded joint of Class I of Class I-L piping shall be marked with the welder's identification symbol. Dies shall not be used to mark the pipe where the pressure exceeds 600 pounds per square inch or the temperature exceeds 750 deg. F. or in Class I-L systems.	GENSPEC Section 505 is an extensive document and is briefly summarized herein given the extensive treatment of piping system requirements by other regulatory bodies presented herein.
587	505	General Requirements for Piping Systems –Component Test Inspections	GENSPEC, Sect. 505g, 1995 Edition	The requirements specified therein apply to components, which are not covered by Government specifications, standard drawings, or approved industry standards.	GENSPEC Section 505 is an extensive document and is briefly

ITEM NO.	SWBS NO.	SWBS TITLE AND TOPIC	STANDARD	AMPLIFICATION OF STANDARD	REMARKS
			GENSPEC, Sect. 505g, 1995 Edition (cont'd)	Pressure tests, valve seat leakage tests, shock and vibration tests shall be done in accordance with 505g1 of this section.	summarized herein given the extensive treatment of piping system requirements by other regulatory bodies presented herein.
588	505	General Requirements for Piping Systems –Fabrication and Installation	GENSPEC, Sect. 505f, 1995 Edition	Fabrication and installation of piping systems shall be in accordance with this section.	GENSPEC Section 505 is an extensive document and is briefly summarized herein given the extensive treatment of piping system requirements by other regulatory bodies presented herein.
589	505	General Requirements for Piping Systems –Flange Facings	CFR, Title 46, Sec. 56.25-10, October 2000	Flange facings shall be in accordance with the applicable standards listed in Table 56.60-1(b) and MSS-SP-6. When bolting class 150 standard steel flanges to flat face cast iron flanges, the steel flange must be furnished with a flat face, and bolting must be in accordance with Sec. 56.25-20 of this part. Class 300 raised face steel flanges may be bolted to class 250 raised face cast iron flanges with bolting in accordance with Sec. 56.25-20(b) of this part.	
590	505	General Requirements for Piping Systems –Technical Documentation	GENSPEC, Sect. 505h, 1995 Edition	Technical documentation for piping systems shall be in accordance with the section including drawings, calculations and analysis, technical manuals, system descriptions, technical reports, and test reports.	GENSPEC Section 505 is an extensive document and is briefly summarized herein given the extensive treatment of piping system requirements by

ITEM NO.	SWBS NO.	SWBS TITLE AND TOPIC	STANDARD	AMPLIFICATION OF STANDARD	REMARKS
			GENSPEC, Sect. 505h, 1995 Edition (cont'd)		other regulatory bodies presented herein.
591	506	Overflows, Air Escapes & Sounding Tubes - Overflows	USCG Cutter Certification Plan, Sort #778, December 2000	Specifies requirements for overboard discharges and shell connections.	
592	506	Overflows, Air Escapes & Sounding Tubes - Overflows	USCG Cutter Certification Plan, Sort #779, December 2000	Specifies requirements for overflow pipes.	
593	506	Overflows, Air Escapes & Sounding tubes - Overflows - High Speed Craft	USCG Cutter Certification Plan, Sort #780, December 2000	Specifies requirements for overflow pipes.	
594	506	Overflows, Air Escapes & Sounding Tubes - Sounding Tubes	USCG Cutter Certification Plan, Sort #775, December 2000	Specifies requirements for sounding devices.	
595	506	Overflows, Air Escapes & Sounding Tubes - Sounding Tubes	USCG Cutter Certification Plan, Sort #776, December 2000	Specifies requirements for sounding.	
596	506	Overflows, Air Escapes & Sounding Tubes - Sounding Tubes - High Speed Craft	USCG Cutter Certification Plan, Sort #777, December 2000	Specifies requirements for sounding tubes.	

ITEM NO.	SWBS NO.	SWBS TITLE AND TOPIC	STANDARD	AMPLIFICATION OF STANDARD	REMARKS
597	506	Overflows, Air Escapes & Sounding Tubes - Spill Prevention	USCG Cutter Certification Plan, Sort #781, December 2000	Specifies requirements for fuel oil and lubricating oil discharge containment.	
598	506	Overflows, Air Escapes & Sounding Tubes - Vent Piping	USCG Cutter Certification Plan, Sort #773, December 2000	Specifies requirements for tank vent piping.	
599	506	Overflows, Air Escapes & Sounding Tubes - Vent Piping - High Speed Craft	USCG Cutter Certification Plan, Sort #782, December 2000	Specifies requirements for vent piping.	
600	506	Overflows, Air Escapes, and Sounding Arrangements - General	GENSPEC, Sect. 506, 1995 Edition	Overflows, air escapes and vents, sounding arrangements and respective shock requirements for each shall be in accordance with this section.	
601	506	Overflows, Air Escapes, and Sounding Arrangements – Tank Vent Piping	CFR, Title 46, Sec. 56.50-85, October 2000	This section applies to vents for all independent, fixed, non-pressure tanks or containers or for spaces in which liquids, such as fuel, ship's stores, cargo, or ballast, are carried and shall be in accordance with paragraph (a) of this section. Tank vents must remain within the watertight subdivision boundaries in which the tanks they vent are located.	
602	506	Overflows, Air Escapes, and Sounding Arrangements – Tank Vents and Overflows	ABS 4-6-4/9	These requirements apply to vents and overflows of liquid and void tanks. Tanks containing flammable liquids, such as fuel oil and lubricating oil are subject to additional requirements, which are provided in this subsection. For hydraulic oil, see also 4-6-7/3.3.2. All tanks served by pumps are to be provided with vents. Tanks	

ITEM NO.	SWBS NO.	SWBS TITLE AND TOPIC	STANDARD	AMPLIFICATION OF STANDARD	REMARKS
			ABS 4-6-4/9 (cont'd)	filled by a pumping system are, in addition to vents, to be fitted with overflows. Tank vents and tank overflows are to be in accordance with 4-6-4/9.3 and 4-6-4/9.5, respectively.	
603	507	Machinery and Piping Designating and Marking - DC Closure Classifications	USCG Cutter Certification Plan, Sort #791, December 2000	DC closure classifications shall be per the Naval Engineering Manual.	
604	507	Machinery and Piping Designating and Marking - General Requirements	USCG Cutter Certification Plan, Sort #783, December 2000	Specifies requirements for machinery and piping designation and marking.	
605	507	Machinery and Piping Designating and Marking - General Requirements	USCG Cutter Certification Plan, Sort #784, December 2000	Specifies requirements for component identification.	
606	507	Machinery and Piping Designating and Marking - Marking Plates	USCG Cutter Certification Plan, Sort #785, December 2000	Navy standard drawing for operation and safety instruction is invoked.	
607	507	Machinery and Piping Designating and Marking - Marking Plates	USCG Cutter Certification Plan, Sort #786, December 2000	Navy standard drawing for marking deck plates for sounding pipes is invoked.	
608	507	Machinery and Piping Designating and Marking - Plate Materials	USCG Cutter Certification Plan, Sort #787, December 2000	Specifies requirements for plates, tags and bands for equipment identification.	

ITEM NO.	SWBS NO.	SWBS TITLE AND TOPIC	STANDARD	AMPLIFICATION OF STANDARD	REMARKS
609	507	Machinery and Piping Designating and Marking - Plate Materials	USCG Cutter Certification Plan, Sort #788, December 2000	Specifies requirements for plates for severe service/ machinery spaces.	
610	507	Machinery and Piping Designating and Marking - Plate Materials	USCG Cutter Certification Plan, Sort #789, December 2000	Specifies requirements for valve label plates.	
611	507	Machinery and Piping Designating and Marking - Valve Handwheel Color Coding	USCG Cutter Certification Plan, Sort #790, December 2000	Specifies use of commercial grade enamel paint product similar to FED SPEC TT-E-489J. As an alternate commercial grade plastic "plastisol" product similar to MIL-P-20689D(3) NOTICE 1, type 1, class 1 is acceptable.	
612	507	Machinery and Piping Designating and Marking - General	GENSPEC, Sect. 507, 1995 Edition	Specifies requirements for machinery and piping designating and marking.	
613	507	Machinery and Piping Designating and Marking – Valve Markings	CFR, Title 46, Sec. 56.20-5, October 2000	Each valve shall bear the manufacturer's name or trademark and reference symbol to indicate the service conditions for which the manufacturer guarantees the valve. The marking shall be in accordance with MSS-SP-25.	
614	508	Thermal Insulation for Machinery, Equipment and Piping - Materials and Selection	USCG Cutter Certification Plan, Sort #792, December 2000	US Navy thermal insulation standards are specified. MIL-STD-769J is an acceptable alternative.	
615	508	Thermal Insulation for Machinery, Equipment and Piping - Materials and Selection	USCG Cutter Certification Plan, Sort #793, December 2000	Specifies requirements for non-combustible materials.	

ITEM NO.	SWBS NO.	SWBS TITLE AND TOPIC	STANDARD	AMPLIFICATION OF STANDARD	REMARKS
616	508	Thermal Insulation for Machinery, Equipment and Piping - Restrictions	USCG Cutter Certification Plan, Sort #794, December 2000	Refractory fiber materials (ceramic fiber and alumina-silica materials) are not permitted.	
617	508	Thermal Insulation for Machinery, Equipment and Piping - Applications	GENSPEC, Sect. 508b, 1995 Edition	All components having hot external surfaces shall be insulated in accordance with this section. Lagging shall be applied as specified in MIL-STD-769. Metal lagging shall be installed to protect insulation from chafing or abrasion, or where the insulation may become oil soaked. It shall also be installed where personnel may step on piping.	
618	508	Thermal Insulation for Machinery, Equipment and Piping – Installation	GENSPEC, Sect. 508d, 1995 Edition	Machinery and pipe covering shall be installed in accordance with requirements herein and those specified in MIL-STD-769 and drawings, NAVSEA Nos. 804-5959214 and 804-5959212.	
619	508	Thermal Insulation for Machinery, Equipment and Piping – Materials and Thickness	GENSPEC, Sect. 508c, 1995 Edition	Materials and minimum acceptable thickness shall comply with MIL-STD-769, and as specified herein.	
620	508	Thermal Insulation for Machinery, Equipment and Piping – Reusable Covers	GENSPEC, Sect. 508e, 1995 Edition	Fabrication and installation of reusable covers shall comply with MIL-STD-769. For hot surface applications requiring insulation, reusable covers shall be installed to permit servicing of machinery, equipment, pipe, and valve takedown joints. For units of machinery or equipment where it would be impractical to install both permanent insulation and reusable covers, the entire insulation may be made reusable.	

ITEM NO.	SWBS NO.	SWBS TITLE AND TOPIC	STANDARD	AMPLIFICATION OF STANDARD	REMARKS
621	509	Thermal Insulation and Acoustic Absorptive Treatment for Ducts and Trunks – Acoustic Absorptive Treatment	GENSPEC, Sect. 509e, 1995 Edition	Acoustic absorptive treatment for ventilation systems may be necessary to meet the space noise criteria of Sect. 073.	
622	509	Thermal Insulation and Acoustic Absorptive Treatment for Ducts and Trunks – Materials	GENSPEC, Sect. 509f, 1995 Edition	The materials used for thermal insulation and acoustic absorptive treatment of ventilation systems shall be in accordance with this section.	
623	509	Thermal Insulation and Acoustic Absorptive Treatment for Ducts and Trunks – Installation	GENSPEC, Sect. 509g, 1995 Edition	Thermal insulation lagging and acoustic absorptive treatment for trunks or ducts shall be installed in accordance with drawing, NAVSEA No. 804-5773932.	
624	509	Thermal Insulation and Acoustic Absorptive Treatment for Ducts and Trunks - Materials Selection and Installation	USCG Cutter Certification Plan, Sort #795, December 2000	Specifies use of Navy standard drawing for insulating ducts	
625	509	Thermal Insulation and Acoustic Absorptive Treatment for Ducts and Trunks - Materials Selection and Installation	USCG Cutter Certification Plan, Sort #796, December 2000	Specifies requirements for non-combustible materials.	
626	509	Thermal Insulation and Acoustic Absorptive Treatment for Ducts and Trunks - Restrictions	USCG Cutter Certification Plan, Sort #797, December 2000	Refractory fiber materials (ceramic fiber and alumina-silica materials) are not permitted.	

ITEM NO.	SWBS NO.	SWBS TITLE AND TOPIC	STANDARD	AMPLIFICATION OF STANDARD	REMARKS
627	512	Heating, Ventilation, and Air Conditioning – Machinery Space Ventilation	ABS 4-1-1/7.13	Suitable ventilation is to be provided for machinery spaces so as to allow simultaneously for crew attendance and for engines, boilers and other machinery to operate at rated power in all weather conditions, including heavy weather.	
628	512	Heating, Ventilation, and Air Conditioning – Ventilating in Machinery Spaces	SOLAS Part C, Reg. 35	Machinery spaces of category A shall be adequately ventilated so as to ensure that when machinery or boilers therein are operating at full power in all weather conditions including heavy weather, an adequate supply of air is maintained to the spaces for the safety and comfort of personnel and the operation of the machinery.	
629	541	Fuel Systems – Alternate Material for Construction of Independent Fuel Tanks	CFR, Title 46, Sec. 58.50-15, October 2000	Materials other than those specifically listed in Table 58.50-5(a) and in Table 58.50-10(a) may be used for fuel tank construction only if the tank as constructed meets the testing requirements of Marine Department, Underwriters' Laboratories, Inc. (formerly Yacht Safety Bureau) STD E-3, paragraph E3-3. Testing may be accomplished by any acceptable laboratory, such as the Marine Department, Underwriters' Laboratories, Inc. (formerly Yacht Safety Bureau), or may be done by the fabricator if witnessed by a marine inspector.	
630	541	Fuel Systems – Diesel Fuel Tanks	CFR, Title 46, Sec. 58.50-10, October 2000	Construction, installation and testing of diesel fuel tanks shall be done in accordance with paragraph (a) through (c) of this section.	
631	541	Fuel Systems – Diesel Powered Ships	GENSPEC, Sect. 541d3, 1995 Edition	The supply to equipment shall be such that manual priming is not required. Equipment using the fuel shall take suction from a header cross-connected to designated service tanks through independent tailpipes. A cutout valve shall be installed at each main or auxiliary service tank connection adjacent to the emergency remote operated cutout valve specified herein. A valve shall be provided in the header between the connections of each engine.	See Section 541d4 for gas turbine fuel systems, if applicable.

ITEM NO.	SWBS NO.	SWBS TITLE AND TOPIC	STANDARD	AMPLIFICATION OF STANDARD	REMARKS
			GENSPEC, Sect. 541d3, 1995 Edition (cont'd)	Excess fuel from the engine shall be recirculated back to the service tank supplying the engines. The return line internal to the tank shall have a 1/4-inch hole at the tank boundary to prevent siphoning of the tank. Each diesel engine fuel return line shall be provided with a check valve to prevent back flow of fuel to a shutdown unit. Where two or more fuel service tanks are provided, a tank cutout valve shall be provided in the return line to each fuel service tank. Relief valve protection shall be provided around one of the tank cutout valves to prevent high backpressure on the engine return system. Unless otherwise approved, positive closing valves are not permitted in the return mains from diesel engines.	
632	541	Fuel Systems – Filters and Strainers	ABS 4-6-5/3.3.4	Filters or strainers are to be provided in the fuel oil injection-pump suction lines and are to be arranged such that they can be cleaned without interrupting the fuel supply. Filters and strainers are to be arranged and located so that, in the event of leakage, oil will not spray onto surfaces with temperature in excess of 220 deg. C (428 deg. F).	
633	541	Fuel Systems – Filters and Strainers	ABS 4-6-5/3.5.4	Where common filters or strainers are provided to serve the fuel oil injection-pump suction lines of all the generator engines, they are to be arranged such that they can be cleaned without interrupting the power supply specified in 4-8-2/3.1.1. In the case where each of the generator engines is fitted with its own strainer or filter, this arrangement alone will suffice.	

ITEM NO.	SWBS NO.	SWBS TITLE AND TOPIC	STANDARD	AMPLIFICATION OF STANDARD	REMARKS
634	541	Fuel Systems – Fuel Oil Flash Point	ABS 4-6-5/3.1.2	Provisions of 4-6-5/3 are intended for internal combustion engines burning fuel oils having a flash point (closed cup test) above 60 deg. C (140 deg. F). Engine burning fuel oil of a lesser flash point is subject to special consideration. In general, fuel oil with flash point of 60 deg. C or below, but not less than 43 deg. C (110 deg. F), may only be used for vessels classed for services in specific geographical areas. The climatic conditions in these areas are to preclude ambient temperature of spaces where such fuel oil is stored from rising within 10 deg. C (18 deg. F) below its flash point. Engines driving emergency generators may use fuel oil with a flash point of 60 deg. C or below but not less than 43 deg. C.	
635	541	Fuel Systems – Fuel Piping	CFR, Title 46, Sec. 119-455, October 2000	The materials and construction of fuel lines, including pipe, tube, and hose, must comply with the requirements of paragraph (a) of this section. The installation of fuel lines, including pipe, tubes, and hose, must comply with the requirements of paragraph (b) of this section.	
636	541	Fuel Systems - Fuel Pumps	USCG Cutter Certification Plan, Sort #885, December 2000	Specifies requirements for positive displacement fuel pumps.	
637	541	Fuel Systems – Fuel Restrictions	CFR, Title 46, Sec. 119-405, October 2000	The Commandant will review the use of a fuel, other than diesel fuel, as an alternative fuel for an internal combustion engine, except gasoline when used as a fuel for outboard motors as allowed by Sec. 119.458 of this part, on a case-by-case basis.	

ITEM NO.	SWBS NO.	SWBS TITLE AND TOPIC	STANDARD	AMPLIFICATION OF STANDARD	REMARKS
638	541	Fuel Systems – Fuel Restrictions	CFR, Title 46, Sec. 128.310, October 2000	Except as provided by paragraph (b) of this section, each internal-combustion engine installed on an OSV (offshore supply vessel), whether for main propulsion or for auxiliaries, must be driven by a fuel having a flashpoint of not lower than 43 deg. C (110 deg. F) as determined by ASTM D93. The use of a fuel with a flashpoint of lower than 43 deg. C (110 deg. F) must be specifically approved by the Commandant (G-MSE), except in an engine for a gasoline-powered rescue boat.	
639	541	Fuel Systems - Fuel Service System	USCG Cutter Certification Plan, Sort #884, December 2000	Fuel service system shall be designed to condition fuel as needed to satisfy equipment manufacturer's requirements.	
640	541	Fuel Systems – Fuel Tanks	ABS 4-6-4/13.5.1	At least two fuel oil service tanks for each type of fuel used on board necessary for propulsion and vital systems, or equivalent arrangements, are to be provided. Each service tank is to have a capacity of at least 8 hours at maximum continuous rating of the propulsion plant and normal operating load at sea of the generator plant.	
641	541	Fuel Systems – Gas Fuel Supply	ABS 5-8-16/3.1	Gas fuel piping should not pass through accommodation spaces, service spaces or control stations. Gas fuel piping may pass through or extend into other spaces provided they fulfill one of the following: (1) the gas fuel piping should be a double wall piping system with the gas fuel contained in the inner pipe. The space between the concentric pipes should be pressurized with inert gas at a pressure greater than the gas fuel pressure. Suitable alarms should be provided to indicate a loss of inert gas pressure between the pipes; or	

ITEM NO.	SWBS NO.	SWBS TITLE AND TOPIC	STANDARD	AMPLIFICATION OF STANDARD	REMARKS
			ABS 5-8-16/3.1 (cont'd)	(2) the gas fuel piping should be installed within a ventilated pipe or duct. The air space between the gas fuel piping and inner wall of this pipe or duct should be equipped with mechanical exhaust ventilation having a capacity of at least 30 air changes per hour. The ventilation system should be arranged to maintain a pressure less than the atmospheric pressure. The fan motors should be placed outside the ventilated pipe or duct. The ventilation outlet should be placed in a position where no flammable gas-air mixture may be ignited. The ventilation should always be in operation when there is gas fuel in the piping. Continuous gas detection should be provided to indicate leaks and to shut down the gas fuel supply to the machinery space in accordance with 5-8-16/3.10. The master gas fuel valve required by 5-8-16/3.7 should close automatically if the required airflow is not established and maintained by the exhaust ventilation system.	
642	541	Fuel Systems – Gas Fuel Supply	ABS 5-8-16/3.1	Gas fuel piping passing through or extending into machinery spaces or other gas-safe spaces other than accommodation spaces, service spaces and control stations is to comply with the following: (1) Where the option in 5-8-16/3.1.1 is used, construction and strength of the outer pipes is to be in accordance with 5-8-5/2. The pressure in the space between concentric pipes is to be continuously monitored. An alarm is to be issued and the two automatic valves in the gas fuel line (interlocked gas valves) specified in 5-8-16/3.6 and the master gas fuel valve (master gas valve) specified in 5-8-16/3.7 are to be closed before the pressure drops to below the inner pipe pressure. At the same time, the third interlocked gas valve connected to the vent outlet is to be opened. The inside of the gas fuel supply piping system between the master gas valve and the engine is to be automatically purged with inert gas when the master valve is closed.	IACS (1998)

ITEM NO.	SWBS NO.	SWBS TITLE AND TOPIC	STANDARD	AMPLIFICATION OF STANDARD	REMARKS
			ABS 5-8-16/3.1 (cont'd)	(2) Where the option in 5-8-16/3.1.2 is used, the number of flanged joints in protective pipes or ducts is to be minimized. The materials, construction and strength of protection pipes or ducts and mechanical ventilation systems are to be sufficiently durable against bursting and rapid expansion of high-pressure gas in the event of gas pipe burst. The air intakes of the mechanical ventilation system are to be provided with non-return devices effective for gas fuel leaks; however, if a gas detector is fitted at the air intakes, the non-return devices can be dispensed with. (3) Alternative arrangements to those given above may be considered if they provide an equivalent level of safety.	
643	541	Fuel Systems – Gas Fuel Supply	ABS 5-8-16/3.10	Gas detection systems provided in accordance with the requirements of 5-8-16/3.1 and 5-8-16/3.4 should comply with 5-8-13/6.2 and 5-8-13/6.4 through 5-8-13/6.8 as applicable; they should activate the alarm at 30% of the lower flammable limit and shut down the master gas fuel valve referred to in 5-8-16/3.7 before the gas concentration reaches 60% of the lower flammable limit.	
644	541	Fuel Systems – Gas Fuel Supply	ABS 5-8-16/3.3	The double wall piping system or the ventilated pipe or duct provided for the gas fuel piping should terminate at the ventilation hood or casing required by 5-8-16/3.4.	
645	541	Fuel Systems – Gas Fuel Supply	ABS 5-8-16/3.4	A ventilation hood or casing should be provided for the areas occupied by flanges, valves, etc., and for the gas fuel piping, at the gas fuel utilization units, such as boilers, diesel engines or gas turbines. If this ventilation hood or casing is not served by the exhaust ventilation fan serving the ventilated pipe or duct as specified in 5-8-16/3.1.2, then it should be equipped with an exhaust ventilation system and continuous gas detection should be provided to indicate leaks and to shut down the gas fuel supply to	

ITEM NO.	SWBS NO.	SWBS TITLE AND TOPIC	STANDARD	AMPLIFICATION OF STANDARD	REMARKS
			ABS 5-8-16/3.4 (cont'd)	the machinery space in accordance with 5-8-16/3.10. The master gas fuel valve required by 5-8-16/3.7 should close automatically if the required airflow is not established and maintained by the exhaust ventilation system. The ventilated hood or casing should be installed or mounted to permit the ventilating air to sweep across the gas utilization unit and be exhausted at the top of the ventilation hood or casing.	
646	541	Fuel Systems – Gas Fuel Supply	ABS 5-8-16/3.4	Ventilation equipment for the vented hood is to be capable of changing the air at least once in two minutes and in no case permit a pressure less than atmospheric in way of the burners.	
647	541	Fuel Systems – Gas Fuel Supply	ABS 5-8-16/3.5	The ventilation inlet and discharge for the required ventilation systems should be respectively from and to a safe location.	
648	541	Fuel Systems – Gas Fuel Supply	ABS 5-8-16/3.6	Each gas utilization unit should be provided with a set of three automatic valves. Two of these valves should be in series in the gas fuel pipe to the consuming equipment. The third valve should be in a pipe that vents, to a safe location in the open air, that portion of the gas fuel piping that is between the two valves in series. These valves should be arranged so that failure of the necessary forced draft, loss of flame on boiler burners, abnormal pressure in the gas fuel supply line, or failure of the valve control actuating medium will cause the two gas fuel valves which are in series to close automatically and the vent valve to open automatically. Alternatively, the function of one of the valves in series and the vent valve can be incorporated into one valve body so arranged that, when one of the above conditions occurs, flow to the gas utilization unit will be blocked and the vent opened. The three shut-off valves should be arranged for manual reset.	
649	541	Fuel Systems – Gas Fuel Supply	ABS 5-8-16/3.7	A master gas fuel valve that can be closed from within the machinery space should be provided within the cargo area. The valve should be arranged so as to close automatically if leakage of	

ITEM NO.	SWBS NO.	SWBS TITLE AND TOPIC	STANDARD	AMPLIFICATION OF STANDARD	REMARKS
			ABS 5-8-16/3.7 (cont'd)	gas is detected, or loss of ventilation for the duct or casing or loss of pressurization of the double-wall gas fuel piping occurs.	
650	541	Fuel Systems – Gas Fuel Supply	ABS 5-8-16/3.8	Gas fuel piping in machinery spaces should comply with 5-8-5/2 through 5-8-5/5 as far as found applicable. The piping should, as far as practicable, have welded joints. Those parts of the gas fuel piping, which are not enclosed in a ventilated pipe or duct according to 5-8-16/3.1 and are on the open deck outside the cargo area should have full penetration butt welded joints and should be fully radiographed.	
651	541	Fuel Systems – Gas Fuel Supply	ABS 5-8-16/3.9	Provision should be made for inerting and gas-freeing that portion of the gas fuel piping system located in the machinery space.	
652	541	Fuel Systems – Gasoline Fuel Tanks	CFR, Title 46, Sec. 58.50-5, October 2000	Construction, installation and testing of gasoline fuel tanks shall be done in accordance with paragraph (a) through (c) of this section.	
653	541	Fuel Systems - General	GENSPEC, Sect. 541b, 1995 Edition	This section contains system requirements for petroleum products intended for ship fuel and cargo oil. Requirements for pumps, other associated equipment, and systems are contained in applicable sections of these specifications. Fuel service system emergency shutdowns, including quick-closing valve operating locations, shall be in accordance with drawing, NAVSHIPS No. 803-2145505.	
654	541	Fuel Systems - General Requirements	USCG Cutter Certification Plan, Sort #877, December 2000	Specifies requirements for systems containing oil.	

ITEM NO.	SWBS NO.	SWBS TITLE AND TOPIC	STANDARD	AMPLIFICATION OF STANDARD	REMARKS
655	541	Fuel Systems - General Requirements	USCG Cutter Certification Plan, Sort #879, December 2000	Specifies requirements for diesel fuel systems.	
656	541	Fuel Systems - General Requirements	USCG Cutter Certification Plan, Sort #880, December 2000	Specifies requirements for fuel oil systems, except for fuel service tank sizing, which shall be in accordance with 1995 GEN SPEC 541.	
657	541	Fuel Systems – General Requirements	ABS 4-6-5/3.1.1	Provisions of 4-6-5/3 apply to systems supplying fuel oil to internal combustion engines intended for propulsion and power generation. Requirements for shipboard fuel oil storage, transfer, heating and purification as provided in 4-6-5/13 are to be complied with. System component requirements in 4-6-4/13.7 are applicable here also.	
658	541	Fuel Systems - General Requirements - High Speed Craft	USCG Cutter Certification Plan, Sort #881, December 2000	Specifies requirements for fuel oil systems.	
659	541	Fuel Systems – Heaters	ABS 4-6-5/3.3.3	When fuel oil heaters are required for propulsion engine operation, at least two heaters of approximately equal size are to be installed. The combined capacity of the heaters is not to be less than that required by the engine(s) at rated power. See 4-6-4/13.7.4 for heater design requirements.	
660	541	Fuel Systems – Heaters	ABS 4-6-5/3.5.3	When fuel oil heaters are required for generator engine operation, at least two heaters of approximately equal size are to be installed. The capacity of the heaters, with one heater out of operation, is not to be less than that required by the engine(s) at power output of normal sea load specified in 4-8-2/3.1.1.	

ITEM NO.	SWBS NO.	SWBS TITLE AND TOPIC	STANDARD	AMPLIFICATION OF STANDARD	REMARKS
661	541	Fuel Systems – Independent Fuel Tanks	CFR, Title 46, Sec. 58.50-1, October 2000	The regulations in this subpart contain requirements for independent fuel tanks. An outage of 2 percent shall be provided on all fuel tanks containing petroleum products.	
662	541	Fuel Systems – Liquefied Flammable Gas Cargo Piping	CFR, Title 46, Sec. 38.10-10, October 2000	The piping shall be designed for a working pressure of not less than the maximum pressure to which it may be subjected but in no case less than the design pressure of the cargo tanks. In the case of piping on the discharge side of the liquid pumps or vapor compressors, the design pressure shall not be less than the pump or compressor discharge relief valve setting; or, provided the piping is not protected by relief valves, the design pressure shall not be less than the total discharge head of the pump or compressor. Piping subject to tank pressure shall be seamless drawn steel or electric resistance welded steel. Pipe used in refrigerated tank systems shall be of a material which is suitable for the minimum service temperature to which it may be subjected, according to the requirements of part 56 of subchapter F (Marine Engineering) of this chapter. Piping shall be provided with adequate support to take the weight of the piping off valves and fittings and to prevent excessive vibration and stresses on tank connections. For nonpressure vessel type tanks, the cargo handling arrangements and piping shall provide for emptying of a damaged tank, including cargo contained by a secondary barrier.	

ITEM NO.	SWBS NO.	SWBS TITLE AND TOPIC	STANDARD	AMPLIFICATION OF STANDARD	REMARKS
663	541	Fuel Systems – Liquefied Flammable Gases	ABS 5-8	Vessels using liquefied flammable gas as a fuel supply may be required to comply with parts of Section 4 and 16 of this chapter.	
664	541	Fuel Systems – Liquefied Flammable Gases	CFR, Title 46, Sec. 38, October 2000	Vessels using liquefied flammable gas as a fuel supply may be required to comply with parts of this section.	
665	541	Fuel Systems – Pumps	ABS 4-6-5/3.3.1	An independently driven standby pump is to be provided for each service pump, booster pump, and other pumps serving the same purpose. For vessels fitted with two or more propulsion engines, the provision of a common standby pump (for each service pump, booster pump, etc.) capable of serving all engines will suffice rather than providing individual standby pumps for each engine. Engines having service, booster, or similar pumps attached to and driven by the engine may, in lieu of the standby pump, be provided with a complete pump carried on board as a spare. Independently driven fuel oil service pumps, booster pumps, and other pumps serving the same purpose are to be fitted with remote means of controls situated outside the space in which they are located so that they may be stopped in the event of fire arising in that space.	
666	541	Fuel Systems – Pumps	ABS 4-6-5/3.5.1	Where generator engines are provided with a common fuel oil service pump or similar, a standby pump capable of serving all engines is to be installed. Engines having individual service pumps, or having service pumps attached to and driven by the engines need not be provided with standby service pump.	
667	541	Fuel Systems – Shock	GENSPEC, Sect. 541f, 1995 Edition	For surface ships incorporating shock requirements, the equipment and components of fuel systems shall meet the grade of shock as specified in this section.	

ITEM NO.	SWBS NO.	SWBS TITLE AND TOPIC	STANDARD	AMPLIFICATION OF STANDARD	REMARKS
668	541	Fuel Systems – Surface Ship Fuel Systems (General)	GENSPEC, Sect. 541d1, 1995 Edition	Requirements specified herein shall be met when operating with either F-76 or JP-5. Motor driven fuel service pumps including in-port service pumps shall have a push-button remote shutdown at the Enclosed Operating Station (EOS) and on the D.C. deck. Service pumps in a space shall utilize one push-button on the D.C. deck and the push button shall be water tight and provided with a hinged cover to prevent inadvertent operation. Each fuel service, auxiliary fuel service, and fuel gravity feed tank shall have a ball valve installed the fuel suction line adjacent to the tank boundary. These valves shall be operated locally and remotely at the D.C. deck. Heaters shall be in accordance with Mil Spec. Mil-H-16313 (steam type) or Mil Spec. Mil-H-24299 type B (electric circulation type). Fuel heaters, pre-filters, filter separators, simplex and duplex strainers shall also be in accordance with this section.	
669	541	Fuel Systems - Tank Stripping System	USCG Cutter Certification Plan, Sort #883, December 2000	A tank stripping system shall be provided so that all service, storage and settling tanks can be stripped of water.	
670	541	Fuel Systems - Tanks	GENSPEC, Sect. 541c, 1995 Edition	A minimum of two fuel service tanks shall be provided for each space containing a propulsion boiler, diesel engine or gas turbine. One fuel service tank shall be provided in each space, which contains an emergency diesel or gas turbine generator. Each fuel service tank shall stow enough fuel for at least 8 hours operation at full load of connected units.	

ITEM NO.	SWBS NO.	SWBS TITLE AND TOPIC	STANDARD	AMPLIFICATION OF STANDARD	REMARKS
			GENSPEC, Sect. 541c, 1995 Edition (cont'd)	A contaminated fuel settling tank shall be provided, when specified, for each space containing a propulsion boiler, gas turbine or diesel engine. Tanks independent of ship structure shall be of welded construction. Material shall be ordinary strength steel (see Sect. 100) or other approved material compatible with the ship structure. For service and contaminated fuel settling tanks, the height shall be the largest dimension. Tailpipes and liquid level indicating systems shall be in accordance with this section.	
671	541	Fuel Systems – Technical Documentation	GENSPEC, Sect. 541g, 1995 Edition	In addition to the drawings prepared in accordance with section 505 that which is listed in the section shall also be provided.	
672	542	Gasoline and JP-5 Systems - General	GENSPEC, Sect. 542, 1995 Edition	This section contains requirements for the stowage and handling of gasoline and JP-5. Additional safety and other requirements associated with the stowage and handling of gasoline or JP-5 are contained in other sections.	
673	551	Compressed Air Systems - Control Air Systems	USCG Cutter Certification Plan, Sort #895-896, December 2000	Specifies requirements for control air systems.	
674	551	Compressed Air Systems – Design Requirements	CFR, Title 46, Sec. 58.30-5, October 2000	Pneumatic systems with a maximum allowable working pressure in excess of 150 pounds per square inch shall be designed with a surge tank or other acceptable means of pulsation dampening. Each pneumatic system must minimize the entry of oil into the system and must drain the system of liquids.	

ITEM NO.	SWBS NO.	SWBS TITLE AND TOPIC	STANDARD	AMPLIFICATION OF STANDARD	REMARKS
675	551	Compressed Air Systems - General	GENSPEC, Sect. 551, 1995 Edition	This section contains the general requirements for all compressed air systems installed on surface ships and submarines. General piping systems and component requirements are covered in Sect. 505.	
676	551	Compressed Air Systems – Pneumatic Application	ABS 4-6-7/5.1	Requirements of 4-6-7/5 apply to shipboard pneumatic systems for control and actuation services. Pneumatic system fitted in self-contained equipment not associated with propulsion and maneuvering of the vessel and completely assembled by the equipment manufacturer need not comply with this subsection. Such pneumatic systems, however, are to comply with the accepted practice of the industry.	
677	551	Compressed Air Systems – Pneumatic System Components	ABS 4-6-7/5.3.1	Air reservoirs having design pressure greater than 6.9 bar (7 kgf/cm 2, 100 lb/in 2) are to be certified by the Bureau (see 4-4-1/1.1). Air reservoirs are to be fitted with drain connections effective under extreme conditions of trim. Where they can be isolated from the system safety valve, they are to be provided with their own safety valves or equivalent devices.	
678	551	Compressed Air Systems – Pneumatic System Components	ABS 4-6-7/5.3.2	Pipe fittings and joints are to meet the requirements for certification in 4-6-1/7.1; materials in 4-6-2/3; and design in 4-6-2/5.5 and 4-6-2/5.13 subject to limitations in 4-6-7/Table 2.	
679	551	Compressed Air Systems – Pneumatic System Components	ABS 4-6-7/5.3.3	The requirements of hydraulic cylinders in 4-6-7/3.5.5 apply also to pneumatic cylinders.	
680	551	Compressed Air Systems – Pneumatic System Requirements	ABS 4-6-7/5.5.1	Compressed air for general pneumatic control and actuation services may be drawn from engine starting air reservoirs. For propulsion remote control purposes, pneumatic air is to be available from at least two air compressors. The starting air	

ITEM NO.	SWBS NO.	SWBS TITLE AND TOPIC	STANDARD	AMPLIFICATION OF STANDARD	REMARKS
			ABS 4-6-7/5.5.1 (cont'd)	system, where consisting of two air compressors, may be used for this purpose. The required air pressure is to be automatically maintained. Pneumatic air supplies to safety and control systems may be derived from the same source but are to be by means of separate lines.	
681	551	Compressed Air Systems – Pneumatic System Requirements	ABS 4-6-7/5.5.2	Provision is to be made to minimize the entry of oil or water into the compressed air system. Suitable separation and drainage arrangements are to be provided before the air enters the reservoirs.	
682	551	Compressed Air Systems – Relief Valves	SOLAS Part C, Reg. 34.1	In every ship means shall be provided to prevent overpressure in any part of compressed air systems and wherever water jackets or casings of air compressors and coolers might be subjected to dangerous overpressure due to leakage into them from air pressure parts. Suitable pressure relief arrangements shall be provided for all systems.	
683	552	Compressed Gas Systems - General	GENSPEC, Sect. 552, 1995 Edition	This section contains the general requirements for arrangement, installation, and shipboard testing of oxygen systems, hydrogen systems, and inert gas systems that include nitrogen, helium, conditioned exhaust gas, and carbon dioxide. General piping system and component requirements are covered in Sect. 505. For air system supply, see Sect. 551. Sect. 671 specify the requirements for the storage of compressed gas in cylinders. Sect. 555 contain the requirements for carbon dioxide as a firefighting agent and requirements for nitrogen cylinders for fire protection systems.	
684	556	Hydraulic Power Transmission System - General	GENSPEC, Sect. 556, 1995 Edition	Hydraulic power transmission system, component selection and design, installation, storage and technical documentation shall be in accordance with this section.	

ITEM NO.	SWBS NO.	SWBS TITLE AND TOPIC	STANDARD	AMPLIFICATION OF STANDARD	REMARKS
685	556	Hydraulic Power Transmission Systems – Accumulators	ABS 4-6-7/3.5.4	Accumulators are to meet the requirements of pressure vessels in Section 4-4-1. Each accumulator, which may be isolated from the system, is to be protected by its own relief valve, or equivalent. The gas side of the accumulator, where applicable, is also to be fitted with a safety valve, or equivalent.	
686	556	Hydraulic Power Transmission Systems – Accumulators	CFR, Title 46, Sec. 58.30-25, October 2000	An accumulator is an unfired pressure vessel in which energy is stored under high pressure in the form of a gas or a gas and hydraulic fluid. Accumulators must meet the applicable requirements in Sec. 54.01- 5 (c)(3), (c)(4), and (d) of this chapter or the remaining requirements in part 54. If the accumulator is of the gas and fluid type, suitable separators shall be provided between the two media, if their mixture would be dangerous, or would result in contamination of the hydraulic fluid and loss of gas through absorption. Each accumulator, which may be isolated, shall be protected on the gas and fluid sides by relief valves set to relieve at pressures not exceeding the maximum allowable working pressures.	
687	556	Hydraulic Power Transmission Systems – Design Requirements	CFR, Title 46, Sec. 58.30-5, October 2000	The requirements of part 56 are also applicable to piping and fittings in fluid power and control systems listed in Sec. 58.30-1 of this part, except as modified herein. The system shall be so designed that proper functioning of any unit shall not be affected by the backpressure in the system. The design shall be such that malfunctioning of any unit in the system will not render any other connected or emergency system inoperative because of backpressure.	
688	556	Hydraulic Power Transmission Systems – Fire Precautions	ABS 4-6-7/3.7.1	Hydraulic power units, including pumps and other pressurized components, with working pressure above 15 bar (225 psi) installed within machinery spaces are to be placed in separate room or rooms.	

ITEM NO.	SWBS NO.	SWBS TITLE AND TOPIC	STANDARD	AMPLIFICATION OF STANDARD	REMARKS
689	556	Hydraulic Power Transmission Systems – Fluid Power Cylinders	CFR, Title 46, Sec. 58.30-30, October 2000	The requirements of this section are applicable to those hydraulic and pneumatic systems listed in Sec. 58.30-1 and to all pneumatic power transmission systems. Fluid power cylinders consisting of a container and a movable piston rod extending through the containment vessel, not storing energy but converting a pressure to work, are not considered to be pressure vessels and need not be constructed under the provisions of part 54 of this subchapter. Cylinders shall be designed for a bursting pressure of not less than 4 times the maximum allowable working pressure. Piston rods, except steering gear rams, shall either be of corrosion resistant material or shall be of steel protected by a plating system acceptable to the Commandant. Materials selection shall be in accordance with the requirements of Sec. 58.30-15(b).	
690	556	Hydraulic Power Transmission Systems – Fluid Power Hose and Fittings	CFR, Title 46, Sec. 58.30-20, October 2000	The requirements of this section are applicable to fluid power hose and fitting of those hydraulic and pneumatic systems listed in Sec. 58.30-1.	
691	556	Hydraulic Power Transmission Systems – General Requirements	ABS 4-6-7/3	Provisions of 4-6-7/3 apply to all shipboard hydraulic oil systems. Hydraulic oil systems essential for propulsion and maneuvering of the vessel are subjected to further requirements. Hydraulic oil systems associated with remote propulsion control are to comply with 4-9-1/11.5 for, among other requirements, duplication of hydraulic pumps. The same systems associated with propulsion machinery spaces intended for centralized or unattended operation (ACC/ACCU notation) are also to meet the provisions of 4-9-7/9 for, among other requirements, flash point of hydraulic fluid.	

ITEM NO.	SWBS NO.	SWBS TITLE AND TOPIC	STANDARD	AMPLIFICATION OF STANDARD	REMARKS
692	556	Hydraulic Power Transmission Systems – General Requirements	CFR, Title 46, Sec. 58.30-1, October 2000	This subpart contains requirements for fluid power transmission and control systems and appurtenances. Except as otherwise provided for in this section, these requirements are applicable to the fluid power and control systems listed in paragraph (a) of this section. Other fluid power and control systems do not have to comply with the detailed requirements of this subpart but must meet the requirements of Sec. 58.30-50.	
693	556	Hydraulic Power Transmission Systems – Hoses	ABS 4-6-7/3.5.2	Hoses are to comply with the requirements of 4-6-2/5.7 for flammable fluid service.	
694	556	Hydraulic Power Transmission Systems – Hydraulic Fluid	CFR, Title 46, Sec. 58.30-10, October 2000	The requirements of this section are applicable to all fluid power transmission and control systems installed on vessels subject to inspection. The fluid used in hydraulic power transmission systems shall have a flashpoint of not less than 200 deg. F. for pressures below 150 pounds per square inch and 315 deg. F. for pressures 150 pounds per square inch and above. The chemical and physical properties of the hydraulic fluid shall be suitable for use with any materials in the system or components thereof and through the entire temperature range to which it may be subjected in service.	
695	556	Hydraulic Power Transmission Systems – Hydraulic Power Cylinder	ABS 4-6-7/3.5.5	Hydraulic cylinders subject to Classes I and II fluid pressures and temperatures as defined in 4-6-1/Table 1 are to be designed, constructed and tested in accordance with a recognized standard for fluid power cylinders.	

ITEM NO.	SWBS NO.	SWBS TITLE AND TOPIC	STANDARD	AMPLIFICATION OF STANDARD	REMARKS
696	556	Hydraulic Power Transmission Systems – Misc. Fluid Power and Control System Requirements	CFR, Title 46, Sec. 58.30-50, October 2000	All fluid power and control systems installed on a vessel, except those listed in Sec. 58.30-1(a), must meet the requirements listed in paragraph (a) of this section.	
697	556	Hydraulic Power Transmission Systems – Pipes and Fittings	ABS 4-6-7/3.5.1	Pipes, pipe fittings and joints are to meet the general requirements of certification in 4-6-1/7.1 (except that ABS certification is not required for all classes of hydraulic piping); materials in 4-6-2/3; and design in 4-6-2/5 subject to limitations in 4-6-7/Table 1.	
698	556	Hydraulic Power Transmission Systems – Piping, Tubing, Valves, Fittings, Pumps and Motors	CFR, Title 46, Sec. 58.30-15, October 2000	The requirements of this section are applicable to piping, tubing, valves, fittings, pumps, and motors of those hydraulic and pneumatic systems listed in Sec. 58.30-1.	
699	556	Hydraulic Power Transmission Systems – Plans	CFR, Title 46, Sec. 58.30-40, October 2000	Diagrammatic plans and lists of materials must be submitted for each of the fluid power and control systems listed in Sec. 58.30-1(a) that is installed on the vessel. Plan submission must be in accordance with subpart 50.20 of this subchapter and must include all listed in paragraph (a) of this section.	
700	556	Hydraulic Power Transmission Systems – Relief Valves	ABS 4-6-7/3.7.2	Relief valves are to be fitted to protect the system from over-pressure. The relieving capacity is not to be less than full pump flow with a maximum pressure rise in the system of not more than 10% of the relief valve setting.	
701	556	Hydraulic Power Transmission Systems – Storage Tanks	ABS 4-6-7/3.3	Location of storage tanks, tank vents and means of sounding for hydraulic oil storage tanks shall be in accordance with 4-6-7/3.31 through 4-6-7/3.3.3.	
702	556	Hydraulic Power Transmission Systems – Testing	CFR, Title 46, Sec. 58.30-35, October 2000	All fluid power and control systems and components thereof shall be tested as required by this section. Accumulators constructed as pressure vessels under the	

ITEM NO.	SWBS NO.	SWBS TITLE AND TOPIC	STANDARD	AMPLIFICATION OF STANDARD	REMARKS
			CFR, Title 46, Sec. 58.30-35, October 2000 (cont'd)	provisions of part 54 of this subchapter shall be tested and retested as required by parts 54 and 61 of this subchapter. Fluid power and control systems and piping assemblies shall be given an installation test in accordance with paragraph (c) of this section. Fluid power and control systems shall be purged with an inert gas or with the working fluid and all trapped air bled from the system prior to any shipboard testing. Fluid control systems, such as boiler combustion controls, containing components with internal parts, such as bellows or other sensing elements, which would be damaged by the test pressure prescribed in paragraphs (c) (1) and (2) of this section may be tested at the maximum allowable working pressure of the system.	
703	556	Hydraulic Power Transmission Systems – Valves	ABS 4-6-7/3.5.3	Valves are to meet the general requirements of certification in 4-6-1/7.1; materials in 4-6-2/3; and design in 4-6-2/5.9 and 4-6-2/5.11. Directional valves are to be treated as pipe fittings and are subjected to pressure, temperature and fluid service restrictions specified by the manufacturers.	
704	556	Hydraulic Systems - Accumulators	USCG Cutter Certification Plan, Sort #944, December 2000	Specifies requirements for accumulators.	
705	556	Hydraulic Systems - Accumulators	USCG Cutter Certification Plan, Sort #946, December 2000	Accumulators shall be nitrogen charged type.	

ITEM NO.	SWBS NO.	SWBS TITLE AND TOPIC	STANDARD	AMPLIFICATION OF STANDARD	REMARKS
706	556	Hydraulic Systems - Design	USCG Cutter Certification Plan, Sort #919, December 2000	Maximum operating pressure of general service hydraulic systems shall typically not exceed 17.5 MPa (3000 psi). Maximum operating pressure of self-contained hydraulic systems of manufacturer standard design shall not exceed 25 MPa (3600 psi). Maximum operating pressures, system design pressures and relief valve set pressures shall be noted on the hydraulic diagram for each system.	
707	556	Hydraulic Systems - Design	USCG Cutter Certification Plan, Sort #920, December 2000	The power rating of equipment driving hydraulic pumps shall be at least continuous duty service at the power level necessary for the hydraulic pump to meet the worst case, peak performance condition required, without the driver overheating or in overload condition.	
708	556	Hydraulic Systems - Design	USCG Cutter Certification Plan, Sort #921, December 2000	Specifies requirements for relief valve set pressure.	
709	556	Hydraulic Systems - Design	USCG Cutter Certification Plan, Sort #922, December 2000	Equipment subject to high external loading shall be protected by a relief valve or burst disk system sized for the extreme flow condition.	
710	556	Hydraulic Systems - Design	USCG Cutter Certification Plan, Sort #923, December 2000	Hydraulic Flushing Diagrams shall be provided for each installed hydraulic system and shall identify the individual subsections and the fluid velocity necessary to achieve turbulent flow conditions.	
711	556	Hydraulic Systems - Design	USCG Cutter Certification Plan, Sort #924, December 2000	The requirements for system flushing in accordance with MIL-STD-419 (or commercial equivalent thereof) shall be considered in the design of the systems and complex equipment. Over the service life of the cutter, hydraulic oil systems and equipment will	

ITEM NO.	SWBS NO.	SWBS TITLE AND TOPIC	STANDARD	AMPLIFICATION OF STANDARD	REMARKS
			USCG Cutter Certification Plan, Sort #924, December 2000 (cont'd)	become contaminated and will require flushing at high Reynolds values in order to remove contaminants. Provisions shall be made for breaking installed hydraulic systems into manageable sections, and for temporary installation of necessary equipment and jumpers for flushing.	
712	556	Hydraulic Systems - Design	USCG Cutter Certification Plan, Sort #925, December 2000	Hydraulic System Diagrams shall be provided for all hydraulic systems. The diagrams shall clearly indicate and identify maximum system operating pressures, system design pressures, and relief valve set pressures. Fluid velocities shall also be provided.	
713	556	Hydraulic Systems - Diagnostic Equipment	USCG Cutter Certification Plan, Sort #931, December 2000	1) MIL-V-24695 (1991) or equivalent commercial marine test, vent and sampling valves shall be installed throughout all hydraulic systems. The valves shall be designed for connect and disconnect with the fluid system under pressure, without leakage. For Guidance: Test valves should be installed where venting is required. Vent valves should be installed on both sides of major components including pumps, motors, regulator valves, control valves, cylinders and filters. The intent is to provide detailed diagnostic capability without shutdown of the systems.	
714	556	Hydraulic Systems - Filter selection	USCG Cutter Certification Plan, Sort #938, December 2000	All filters and their salient features shall be clearly identified on the system hydraulic diagrams. Documentation on filters shall be incorporated into technical publications. Salient features include size, type, dirt capacity and Beta rating of the filter. Dirt capacity shall be determined by SAE or ISO standard multi-pass methods. Filter ratings shall be based on Beta ratings: "Absolute" or other dated filter ratings shall not be used.	

ITEM NO.	SWBS NO.	SWBS TITLE AND TOPIC	STANDARD	AMPLIFICATION OF STANDARD	REMARKS
715	556	Hydraulic Systems - Filters	USCG Cutter Certification Plan, Sort #937, December 2000	Specifies requirements for filters.	
716	556	Hydraulic Systems - General Requirements	USCG Cutter Certification Plan, Sort #910, December 2000	Specifies fluid power and control systems requirements, except as modified by SWBS 556. General piping requirements are in SWBS 505.	
717	556	Hydraulic Systems - General Requirements	USCG Cutter Certification Plan, Sort #911, December 2000	Specifies requirements applicable to US Navy combatant grade hydraulic systems.	
718	556	Hydraulic Systems - General Requirements	USCG Cutter Certification Plan, Sort #912, December 2000	Specifications and Standards for Marine Hydraulic Systems and Components, Information Report, may be used for guidance.	
719	556	Hydraulic Systems - Heat Exchangers	USCG Cutter Certification Plan, Sort #942, December 2000	Hydraulic fluid must be maintained in reservoirs below 150°F. For Guidance: Hydraulic power units may operate at zero stroke on a continuous basis. Hydraulic power units may also be required to operate while the cutter is in temperate weather conditions. High ambient compartment temperatures when operating in temperate zones are not conducive to effective heat rejection to compartment air. Heat exchanger design shall prevent seawater contamination of hydraulic fluid. For Guidance: Coolant leakage to the compartment is preferred over leakage into hydraulic fluid.	

ITEM NO.	SWBS NO.	SWBS TITLE AND TOPIC	STANDARD	AMPLIFICATION OF STANDARD	REMARKS
720	556	Hydraulic Systems - Hydraulic Fluid	USCG Cutter Certification Plan, Sort #913, December 2000	Hydraulic fluid must be selected for both cold iron startup and normal operating conditions. Equipment operation cycles are typically uncontrolled and systems will frequently be in cold-iron condition until service is required. Once operating, equipment may run continuously for extended periods in no flow condition or in active use condition.	
721	556	Hydraulic Systems - Hydraulic Fluid	USCG Cutter Certification Plan, Sort #914, December 2000	Material Safety Data Sheet (MSDS) required for each fluid.	
722	556	Hydraulic Systems - Hydraulic Power Units and Control	USCG Cutter Certification Plan, Sort #940, December 2000	Hydraulic power units (HPUs) shall have local control at the unit, with remote control disconnect capability. The first remote level of control shall be on the MPCMS, see SWBS 202. Remote control disconnect capability shall be provided. Secondary level remote control may be provided for major hydraulic systems. "E-STOP" switch devices shall be protected from accidental operation by lift to access bezel, raised bezel shroud, or similar device. HPUs shall not automatically reset and restart when an E-Stop is returned to neutral position.	
723	556	Hydraulic Systems - Hydraulic Pumps and Motors	USCG Cutter Certification Plan, Sort #934, December 2000	Hydraulic pumps and motors shall have a rated static pressure of not less than 1.7 times the system design pressure and a rated fatigue pressure of not less than 1.35 times the system design pressure. See National Fluid Power standards T3.9.22 R1 and T.2.6.R1.	

ITEM NO.	SWBS NO.	SWBS TITLE AND TOPIC	STANDARD	AMPLIFICATION OF STANDARD	REMARKS
			USCG Cutter Certification Plan, Sort #934, December 2000 (cont'd)	Pump and motor porting shall terminate in bosses cast or machined in the case or cover. Except for gage ports, all other porting shall be ISO standard straight thread connections with O-ring seal, or O-ring seal flange connections. Tapered thread bosses with adapters are not acceptable.	
724	556	Hydraulic Systems - Maintenance	USCG Cutter Certification Plan, Sort #932, December 2000	The system designer shall establish the contamination and water content limit levels for all hydraulic systems, which meet manufacturer requirements and will permit the system to meet service life requirements. The contamination limits shall be documented in the system technical publications and on the hydraulic system diagrams. Hydraulic particulate contamination shall be described using ISO 4406 (1999) contamination reporting levels. SAE J1779 (1992) may be used for guidance in the determination of appropriate contamination levels.	
725	556	Hydraulic Systems - Maintenance	USCG Cutter Certification Plan, Sort #933, December 2000	The contractor shall prepare, as part of system and equipment technical publications, maintenance plans to establish and maintain hydraulic fluid cleanliness. The maintenance plans shall include initial cleaning and flushing of piping, hoses and components; decontamination procedures; proposed schedule for fluid sampling; and establishment of flushing procedures.	
726	556	Hydraulic Systems - Materials	USCG Cutter Certification Plan, Sort #930, December 2000	Cadmium shall not be used where it will be in contact with hydraulic oil. Nodular cast iron and carbon steel shall be limited to such components as pump bodies, hydraulic motors and valve bodies. Such components shall be coated to minimize external corrosion.	

ITEM NO.	SWBS NO.	SWBS TITLE AND TOPIC	STANDARD	AMPLIFICATION OF STANDARD	REMARKS
727	556	Hydraulic Systems - Noise Control	USCG Cutter Certification Plan, Sort #939, December 2000	Specifies requirements for minimizing impact of hydraulic system generated noise.	
728	556	Hydraulic Systems - Piping	USCG Cutter Certification Plan, Sort #926, December 2000	Hydraulic piping and tubing connections shall be welded, to the extent practical. NPT, BSP and other tapered thread fittings shall not be used. O-ring seal connections are preferred.	
729	556	Hydraulic Systems - Piping	USCG Cutter Certification Plan, Sort #927, December 2000	Hydraulic hose connections to piping shall be O-ring seal type.	
730	556	Hydraulic Systems - Piping	USCG Cutter Certification Plan, Sort #928, December 2000	For central hydraulic systems and multi-function hydraulic systems, sufficient isolation valves shall be provided to permit securing of individual sub-systems without loss of other services. Isolation valves in pressure supply lines shall be ball-type. Spring type check valves may be used for isolation of return and drain lines. In the selection and placement of isolation valves, consideration shall be given to the impact of spike loads generated when the valves are opened. Where related isolation valves must be opened in a particular sequence, warning plates shall be attached to the valves and warnings shall be noted on the hydraulic system diagram.	
731	556	Hydraulic Systems - Rams and Cylinders	USCG Cutter Certification Plan, Sort #935, December 2000	Material, pressure and design standards are specified in accordance with Section 4/6.22.	

ITEM NO.	SWBS NO.	SWBS TITLE AND TOPIC	STANDARD	AMPLIFICATION OF STANDARD	REMARKS
732	556	Hydraulic Systems - Reservoirs	USCG Cutter Certification Plan, Sort #941, December 2000	Reservoirs shall be of corrosion resistant materials and be fitted with cleanouts. The design shall maintain the fluid level at an effective working height and allow air and foreign matter to separate out. Reservoir capacity shall be sufficient to permit draining of the connected service piping. Pump suctions shall prevent pump cavitation and starvation. Reservoirs shall support quick connection of portable filter units for filtering, filling, drainage, and recirculation of oil. Reservoir design pressure shall be satisfactory for the system served as well as portable filter units with the reservoir vent blocked. A fixed safety device may be provided to protect the reservoir from overpressurization. Reservoir venting systems shall prevent overpressurization from fluid surges resulting from changes in system loads. Fluid level shall be indicated external to reservoirs, and be visible at acute viewing angles. Sight-glasses subject to damage and bulls-eye type indicators that are difficult to read are not acceptable.	
733	556	Hydraulic Systems - Support System	USCG Cutter Certification Plan, Sort #917, December 2000	Hydraulic oil storage tank of sufficient size to support make-up requirements for all hydraulic systems for six months, and to replace the fluid in the largest single operating reservoir. (Not applicable to high speed craft.) Oil purification equipment (may be portable) shall be provided to maintain cleanliness of the fluid for reservoirs larger than 500 liters (132 gallon), and for systems subject to seawater contamination. Equipment shall be operable at sea. Oil transfer capability shall be provided to supply reserve	

ITEM NO.	SWBS NO.	SWBS TITLE AND TOPIC	STANDARD	AMPLIFICATION OF STANDARD	REMARKS
			USCG Cutter Certification Plan, Sort #917, December 2000 (cont'd)	hydraulic fluid and draw used fluid from the working reservoirs of steering gears, controllable pitch propulsor systems, and primary service systems with volumes larger than 500 liters (132 gallons). Temporary jumpers shall provide connections to other reservoirs.	
734	556	Hydraulic Systems - Systems Arrangements	USCG Cutter Certification Plan, Sort #916, December 2000	1) Individual equipment shall be supported at rated load and rated speed. A pressure reserve of not less than 15% shall be provided. 2) Potential concurrent usage shall be addressed. 3) Equipment reliability and maintenance, cutter manning and any requirement for secondary power sources in case of hydraulic power unit (HPU) failure must be considered in the usage study and systems design. Secondary power sources for systems other than steering and controllable pitch systems shall be intended for equipment recovery and emergency operation only, and shall not be required to provide flow to achieve 100% equipment rated function speeds. 4) A hydraulic usage study shall be prepared to determine equipment requirements and power arrangements. Equipment requirements include coincidental use analysis and load factors under various operating conditions and scenarios. The study shall be approved prior to finalization of hydraulic system designs.	
735	556	Hydraulic Systems - Technical Documentation	USCG Cutter Certification Plan, Sort #945, December 2000	Specifies requirements for hydraulic symbols on system diagrams and technical manuals.	
736	556	Hydraulic Systems - Valves	USCG Cutter Certification Plan, Sort #929, December 2000	Valves shall be accessible for maintenance and repair. Manifold and subplate type valves are preferred for maintenance purposes. In-line, welded valves shall be modular in construction for removal and replacement of operating components.	

ITEM NO.	SWBS NO.	SWBS TITLE AND TOPIC	STANDARD	AMPLIFICATION OF STANDARD	REMARKS
			USCG Cutter Certification Plan, Sort #929, December 2000 (cont'd)	Valve material and design shall minimize corrosion from water vapor. Valves in the weather shall have stainless steel spools and shall have fully booted stems. Valve operation shall prevent detrimental surges and shocks to the system. Where isolation or other maintenance valves that are occasionally used must be operated in sequence, warning tags shall be attached to all related valves. Provision shall be made for locking adjustable valves at service adjustment. Manually adjustable valves shall have calibration marking system to permit repeat setting.	

APPENDIX C: Review of "An Evaluation of Fuel Cells for Commercial Ship Applications" (Ref. 2)

This paper, published by The Society of Naval Architects and Marine Engineers as Technical & Research Report R-55, evaluates the potential of current fuel cell technology to be used on board commercial ships to generate electricity for hotel and/or propulsion loads. A discussion of the chemistry, thermodynamics, and operating parameters of fuel cells is presented and followed by a detailed synopsis of the particulars of each of the four types of fuel cells most likely to be used on board ships, namely, phosphoric-acid fuel cells, molten-carbonate fuel cells, solid-oxide fuel cells, and polymer-electrolyte fuel cells. Each synopsis includes background information, special features, statistics, hypothetical shipboard installations, and a list of companies that manufacture that particular type of fuel cell.

Each fuel cell alternative is then evaluated for possible shipboard application taking into consideration major auxiliary equipment, elimination of unnecessary equipment, load distribution, consolidation vs. modularity of Balance of Plant, start-up and shut-down, and dynamic load effects. The paper also discusses the selection of fuel cell types based on capital cost, efficiency, size, weight, fuel choices, and technological maturity (reliability) as well as potential commercial applications.

[This page intentionally left blank.]

APPENDIX D: Review of "Integration of Hydrogen Technology into Maritime Applications" (Ref. 6)

This document, prepared under the Department of Energy (DOE) Contract No. DE-FG01-99EE35102, gives an overview of current global and U.S. energy consumption and environmental considerations. It emphasizes the need for alternative fuels and propulsion technologies on a grand scale to remedy this excessive energy consumption and CO_2 emissions. DOE has funded this report as an effort to study the potential use of hydrogen technology for power generation aboard vessels operating in U.S. waters. The primary focus of the report is the reduction of engine emissions from the vessel power plants.

Using various studies performed by DOE and the Environmental Protection Agency (EPA), and feasibility studies performed using the U.S. Coast Guard Cutter VINDICATOR and the T/V KINGS POINTER, this report establishes the numerous advantages of using fuel cells over traditional power plants. These advantages stem from not only fuel and emission reduction, but also the reduction of noise, infrared signature, cost, manning, plant weight, and maintenance.

Sections 1 through 6 mainly address the need for alternative fuel technologies and review the theories behind them. However, it is Sections 7 through 11 that are the most relevant to this task. Section 7, entitled "Vessel Design and Construction Certification Issues and Global and US Maritime Industry Requirements," states the need for an investigation of the unique shipboard environment as well as safety and risk assessment for the new technology of fuel cells and hydrogen as a fuel in ships. This section discusses the development of safety standards and requirements for the integration of hydrogen fuel cell power plants on ships and offshore marine facilities. Section 8 addresses risk mitigation, risk management, and the risk management planning requirements associated with fuel cells and the viability of hydrogen as a marine fuel followed by a general overview of financial and cost considerations given in Section 9. Current development of new technologies is discussed in Section 10, with a brief conclusion and subsequent recommendations in Section 11.

Perhaps the most relevant part of the report to this task is Appendix 1. Appendix 1 is a two-part specification that provides system requirements and design specifications for a generic maritime hydrogen fuel cell laboratory. Part 1 addresses example user requirement specifications including system/item definition, characteristics, design and construction, documentation, logistics, personnel, training, etc. Part 2 provides an example of design specifications including external interfaces, performance, reliability, maintainability, environmental conditions, transportability, design and construction, and documentation.

Appendix 2 includes the Fuel Cell Systems Integration Research Project for the T/V KINGS POINTER. The specifications provided within describe the requirements for installation of a 200 kW, compressed natural gas fed, phosphoric acid fuel cell power plant on board the vessel as an alternative fuel demonstration project. The specifications address general requirements, hull structure requirements, insulation and linings, surface preparation and painting, fuel system requirements for compressed and liquefied natural gas, sea water systems, fresh water systems, fuel process air systems, nitrogen systems, general requirements for piping

systems, insulation-lagging for piping and machinery, control systems, fuel cell power plants, and electrical systems.

APPENDIX E: Survey of Ship Classification Society Fuel Cell Requirements

Title and Contact	Status	Description
Mr. Richard Delpizzo Mr. Thomas Ingram American Bureau of Shipping (ABS) url: http://www.eagle.org/	No response to survey.	N/A
Mr. Joseph Benoit Regional Representative Tel : 716-505-3300 Fax : 716-505-3301 email: joseph.benoit@bureauveritas.com Bureau Veritas (BV) 100 Northpointe Parkway Buffalo, New York 14228 url: http://www.bureauveritas.com/	No response to survey.	N/A
Dr.-Ing. Gerd Wuersig Mechanical Engineering Department Tel: 49-40-36149-621 Fax: 49-40-36149-200 Email: wue@germanlloyd.org Steve Gumpel Area Manager U.S.A. Tel: 914-366-6606 Fax: 914-366-0426 email: glnye@inetmail.att.net Germanischer Lloyd (GL) url: http://www.germanlloyd.org	GL will publish fuel cell guidelines during second half of 2001.	Guidelines will concern handling of gaseous fuels onboard ships, with special focus on fuel cell applications.
Mr. Dominick Cantoe DNV Certification, Jersey email: Dominick.Cantoe@dnv.com Det Norske Veritas (DNV) url: http://www.dnv.com/	No response to survey.	N/A

Mr. Jack Polderman Senior VP, Marine Business Email: jack.polderman@lr.org Lloyd's Register url: http://www.lr.org/	No response to survey.	N/A
Mr. Daisuke Kitamuki Machinery Dept. Tel: 81-3-5226-2022 Fax: 81-3-5226-2024 Email: kitamuki@classnk.or.jp Nippon Kaiji Kyokai (ClassNK) 4-7, Kioi-cho, Chiyoda-ku, Tokyo 102, Japan Url: http://www.classnk.or.jp/	Currently studying fuel cells. No current fuel cell regulations or plans to develop any.	N/A

APPENDIX F: Reference Catalog of Codes and Standards

Reference Catalog of Codes and Standards

No.	Land/ Marine	Sort	Document/Standard	Cost	Contact/Purchasing Information	Reviewed
1	L	ANSI	ANSI 12.23-1989 Method for the Designation of Sound Power Emitted by Machinery and Equipment American National Standards Institute 11 West 42nd Street New York, NY 10036	HC $117.00	Global Engineering Documents 15 Inverness Way East Englewood, CO 80112 Phone: (800) 854-7179 url: http://global.ihs.com e-mail: global@ihs.com	No
2	L	ANSI	ANSI A13.1-1996 Scheme for Identification of Piping Gases American National Standards Institute 11 West 42nd Street New York, NY 10036	HC $42.00	Global Engineering Documents 15 Inverness Way East Englewood, CO 80112 Phone: (800) 854-7179 url: http://global.ihs.com e-mail: global@ihs.com	No
3	L	ANSI	ANSI C101.1-1992 Leakage Current for Applications American National Standards Institute 11 West 42nd Street New York, NY 10036	HC $95.00	Global Engineering Documents 15 Inverness Way East Englewood, CO 80112 Phone: (800) 854-7179 url: http://global.ihs.com e-mail: global@ihs.com	No

HC – Hard Copy
EC – Electric Copy

No.	Land/ Marine	Sort	Document/Standard	Cost	Contact/Purchasing Information	Reviewed
4	L	ANSI	ANSI S1.10-1966 (R1986) Method for Calibration of Microphones American National Standards Institute 11 West 42nd Street New York, NY 10036	HC $158.00	Global Engineering Documents 15 Inverness Way East Englewood, CO 80112 Phone: (800) 854-7179 url: http://global.ihs.com e-mail: global@ihs.com	No
5	L	ANSI	ANSI S1.13-1995 Measurement of Sound Pressure Levels in Air American National Standards Institute 11 West 42nd Street New York, NY 10036 Note: same as ASA 118	HC $169.00	Global Engineering Documents 15 Inverness Way East Englewood, CO 80112 Phone: (800) 854-7179 url: http://global.ihs.com e-mail: global@ihs.com	No
6	L	ANSI	ANSI S1.4-1983 (R1994), and Supplemental S1.4a-1985 Specifications for Sound Level Matters American National Standards Institute 11 West 42nd Street New York, NY 10036 Note: same as ASA 47	HC $130.00	Global Engineering Documents 15 Inverness Way East Englewood, CO 80112 Phone: (800) 854-7179 url: http://global.ihs.com e-mail: global@ihs.com	No

HC – Hard Copy
EC – Electric Copy

No.	Land/ Marine	Sort	Document/Standard	Cost	Contact/Purchasing Information	Reviewed
7	L	ANSI	ANSI Z21.13-1991, and Addenda, Z21.13a-1993 and Z21.13b-1994 Gas-Fired Low-Pressure Steam and Hot Water Boilers American National Standards Institute 11 West 42nd Street New York, NY 10036	HC $318.00	Global Engineering Documents 15 Inverness Way East Englewood, CO 80112 Phone: (800) 854-7179 url: http://global.ihs.com e-mail: global@ihs.com	No
8	L	ANSI	ANSI Z21.20-1997 Automatic Gas Ignition Systems and Components American National Standards Institute 11 West 42nd Street New York, NY 10036	HC $308.00	Global Engineering Documents 15 Inverness Way East Englewood, CO 80112 Phone: (800) 854-7179 url: http://global.ihs.com e-mail: global@ihs.com	No
9	L	ANSI	ANSI Z21.83-1998 Fuel Cell Power Plants American National Standards Institute 11 West 42nd Street New York, NY 10036	HC $263.00	Global Engineering Documents 15 Inverness Way East Englewood, CO 80112 Phone: (800) 854-7179 url: http://global.ihs.com e-mail: global@ihs.com	Yes

HC – Hard Copy
EC – Electric Copy

No.	Land/ Marine	Sort	Document/Standard	Cost	Contact/Purchasing Information	Reviewed
10	L	ASCE/ANSI	ANSI/ASCE 7-1998 Minimum Design Loads for Buildings and Other Structures American Society of Civil Engineers 1801 Alexander Bell Drive Reston, Virginia 20191-4400	HC $89.00	ASCE Publications 1801 Alexander Bell Drive Reston, Virginia 20191 Phone: 1-800-548-ASCE (2723) url: http://www.pubs.asce.org e-mail: marketing@asce.org	No
11	L	ASME	ASME BPVC Code Cases (1998) Boiler and Pressure Vessels American Society of Mechanical Engineers 345 East 47th St. New York, NY 10017	HC $275.00	ASME Information Central/Orders P.O. Box 2300 Fairfield, NJ 07007-2300 Phone: (800) THE-ASME (U.S/Canada) Fax: (973) 882-1717 url: http://www.asme.org e-mail: infocentral@asme.org	No
12	L	ASME	ASME PTC 50 Performance Test Code for Fuel Cell Power Plants American Society of Mechanical Engineers 345 East 47th St. New York, NY 10017 Note: not yet published	N/A	ASME Information Central/Orders P.O. Box 2300 Fairfield, NJ 07007-2300 Phone: (800) THE-ASME (U.S/Canada) Fax: (973) 882-1717 url: http://www.asme.org e-mail: infocentral@asme.org	No

HC – Hard Copy
EC – Electric Copy

No.	Land/ Marine	Sort	Document/Standard	Cost	Contact/Purchasing Information	Reviewed
13	L	ASME/ANSI	ANSI/ASME B1.13M-1995 Metric Screw Threads – M Profile American Society of Mechanical Engineers 345 East 47th St. New York, NY 10017	HC $45.00	ASME Information Central/Orders P.O. Box 2300 Fairfield, NJ 07007-2300 Phone: (800) THE-ASME (U.S/Canada) Fax: (973) 882-1717 url: http://www.asme.org e-mail: infocentral@asme.org	No
14	L	ASME/ANSI	ANSI/ASME B1.1-1989 Unified Inch Screw Threads (UN and UNR Thread Form) American Society of Mechanical Engineers 345 East 47th St. New York, NY 10017	HC $55.00	ASME Information Central/Orders P.O. Box 2300 Fairfield, NJ 07007-2300 Phone: (800) THE-ASME (U.S/Canada) Fax: (973) 882-1717 url: http://www.asme.org e-mail: infocentral@asme.org	No
15	L	ASME/ANSI	ANSI/ASME B1.16M-1984 (R1992) Gages and Gaging for Metric M Screw Threads American Society of Mechanical Engineers 345 East 47th St. New York, NY 10017	HC $55.00	ASME Information Central/Orders P.O. Box 2300 Fairfield, NJ 07007-2300 Phone: (800) THE-ASME (U.S/Canada) Fax: (973) 882-1717 url: http://www.asme.org e-mail: infocentral@asme.org	No

HC – Hard Copy
EC – Electric Copy

No.	Land/ Marine	Sort	Document/Standard	Cost	Contact/Purchasing Information	Reviewed
16	L	ASME/ANSI	ANSI/ASME B1.20.1-1983 (R1992) Pipe Threads, General Purpose, (Inch) American Society of Mechanical Engineers 345 East 47th St. New York, NY 10017	HC $32.00	ASME Information Central/Orders P.O. Box 2300 Fairfield, NJ 07007-2300 Phone: (800) THE-ASME (U.S/Canada) Fax: (973) 882-1717 url: http://www.asme.org e-mail: infocentral@asme.org	No
17	L	ASME/ANSI	ANSI/ASME B1.2-1983 (R1991) Gages and Gaging Unified Inch Screw Threads American Society of Mechanical Engineers 345 East 47th St. New York, NY 10017	HC $55.00	ASME Information Central/Orders P.O. Box 2300 Fairfield, NJ 07007-2300 Phone: (800) THE-ASME (U.S/Canada) Fax: (973) 882-1717 url: http://www.asme.org e-mail: infocentral@asme.org	No
18	L	ASME/ANSI	ANSI/ASME B1.3M-1992 Screw Thread Gaging Systems for Dimensional Acceptability – Inch and Metric Threads (UN, UNR, UNJ, M and MJ) American Society of Mechanical Engineers 345 East 47th St. New York, NY 10017	HC $32.00	ASME Information Central/Orders P.O. Box 2300 Fairfield, NJ 07007-2300 Phone: (800) THE-ASME (U.S/Canada) Fax: (973) 882-1717 url: http://www.asme.org e-mail: infocentral@asme.org	No

HC – Hard Copy
EC – Electric Copy

No.	Land/ Marine	Sort	Document/Standard	Cost	Contact/Purchasing Information	Reviewed
19	L	ASME/ANSI	ANSI/ASME B18.2.1-1986 Square and Hex Bolts and Screws (Inch Series) American Society of Mechanical Engineers 345 East 47th St. New York, NY 10017	HC $47.00	ASME Information Central/Orders P.O. Box 2300 Fairfield, NJ 07007-2300 Phone: (800) THE-ASME (U.S/Canada) Fax: (973) 882-1717 url: http://www.asme.org e-mail: infocentral@asme.org	No
20	L	ASME/ANSI	ANSI/ASME B18.2.2-1987 (R1999) Square and Hex Nuts (Inch Series) American Society of Mechanical Engineers 345 East 47th St. New York, NY 10017	HC $35.00	ASME Information Central/Orders P.O. Box 2300 Fairfield, NJ 07007-2300 Phone: (800) THE-ASME (U.S/Canada) Fax: (973) 882-1717 url: http://www.asme.org e-mail: infocentral@asme.org	No
21	L	ASME/ANSI	ANSI/ASME B18.6.2-1998 Slotted Head Cap Screws, Square Head Set Screws, and Slotted Headless Set Screws American Society of Mechanical Engineers 345 East 47th St. New York, NY 10017	HC $29.00	ASME Information Central/Orders P.O. Box 2300 Fairfield, NJ 07007-2300 Phone: (800) THE-ASME (U.S/Canada) Fax: (973) 882-1717 url: http://www.asme.org e-mail: infocentral@asme.org	No

HC – Hard Copy
EC – Electric Copy

No.	Land/ Marine	Sort	Document/Standard	Cost	Contact/Purchasing Information	Reviewed
22	L	ASME/ANSI	ANSI/ASME B18.6.3-1998 Slotted and Recessed Head Machine Screws and Machine Screw Nuts American Society of Mechanical Engineers 345 East 47th St. New York, NY 10017	HC $49.00	ASME Information Central/Orders P.O. Box 2300 Fairfield, NJ 07007-2300 Phone: (800) THE-ASME (U.S/Canada) Fax: (973) 882-1717 url: http://www.asme.org e-mail: infocentral@asme.org	No
23	L	ASME/ANSI	ANSI/ASME B18.6.4-98 Thread Forming and Cutting Tapping Screws and Metallic Drive Screws (Inch Series) American Society of Mechanical Engineers 345 East 47th St. New York, NY 10017	HC $49.00	ASME Information Central/Orders P.O. Box 2300 Fairfield, NJ 07007-2300 Phone: (800) THE-ASME (U.S/Canada) Fax: (973) 882-1717 url: http://www.asme.org e-mail: infocentral@asme.org	No
24	L	ASME/ANSI	ANSI/ASME B31.1-1998 Power Piping American Society of Mechanical Engineers 345 East 47th St. New York, NY 10017	HC $195.00	ASME Information Central/Orders P.O. Box 2300 Fairfield, NJ 07007-2300 Phone: (800) THE-ASME (U.S/Canada) Fax: (973) 882-1717 url: http://www.asme.org e-mail: infocentral@asme.org	No

HC – Hard Copy
EC – Electric Copy

No.	Land/ Marine	Sort	Document/Standard	Cost	Contact/Purchasing Information	Reviewed
25	L	ASME/ANSI	ANSI/ASME B31.3-1999 Process Piping American Society of Mechanical Engineers 345 East 47th St. New York, NY 10017	HC $255.00	ASME Information Central/Orders P.O. Box 2300 Fairfield, NJ 07007-2300 Phone: (800) THE-ASME (U.S/Canada) Fax: (973) 882-1717 url: http://www.asme.org e-mail: infocentral@asme.org	No
26	L	ASME/ANSI	ANSI/ASME B36.10M-1996 Welded and Seamless Wrought Steel Pipe American Society of Mechanical Engineers 345 East 47th St. New York, NY 10017	HC $35.00	ASME Information Central/Orders P.O. Box 2300 Fairfield, NJ 07007-2300 Phone: (800) THE-ASME (U.S/Canada) Fax: (973) 882-1717 url: http://www.asme.org e-mail: infocentral@asme.org	No
27	L	ASME/ANSI	ANSI/ASME B40.100-98 Gages – Pressure Indicating Dial Type – Elastic Element American Society of Mechanical Engineers 345 East 47th St. New York, NY 10017	HC $95.00	ASME Information Central/Orders P.O. Box 2300 Fairfield, NJ 07007-2300 Phone: (800) THE-ASME (U.S/Canada) Fax: (973) 882-1717 url: http://www.asme.org e-mail: infocentral@asme.org	No

HC – Hard Copy
EC – Electric Copy

No.	Land/ Marine	Sort	Document/Standard	Cost	Contact/Purchasing Information	Reviewed
28	L	ASME/ANSI	ANSI/ASME PTC 19.3-1974 (R1998) Performance Test Code – Temperature Measurement American Society of Mechanical Engineers 345 East 47th St. New York, NY 10017	HC $55.00	ASME Information Central/Orders P.O. Box 2300 Fairfield, NJ 07007-2300 Phone: (800) THE-ASME (U.S/Canada) Fax: (973) 882-1717 url: http://www.asme.org e-mail: infocentral@asme.org	No
29	L	ASTM	ASTM A653/A653M-00 Specifications for General Requirements for Sheet Steel, Zinc-Coated (Galvanized) by the Hot-Dip Process American Society for Testing & Materials 100 Barr Harbor Dr. West Conshohocken, PA 19428-2959	HC/EC $30.00	American Society for Testing & Materials 100 Barr Harbor Dr. West Conshohocken, PA 19428-2959 Phone: (610) 832-9585 Fax: (610) 832-9555 url: http://www.astm.org e-mail: service@astm.org	No
30	L	ASTM	ASTM A90/A90M-95a Standard Test Method for Weight of Coating on Zinc-Coated (Galvanized) Iron or Steel Articles American Society for Testing & Materials 100 Barr Harbor Dr. West Conshohocken, PA 19428-2959	HC/EC $25.00	American Society for Testing & Materials 100 Barr Harbor Dr. West Conshohocken, PA 19428-2959 Phone: (610) 832-9585 Fax: (610) 832-9555 url: http://www.astm.org e-mail: service@astm.org	No

HC – Hard Copy
EC – Electric Copy

No.	Land/ Marine	Sort	Document/Standard	Cost	Contact/Purchasing Information	Reviewed
31	L	ASTM	ASTM B154-95 Standard Test Method for Mercurous Nitrate Test for Copper and Copper Alloys American Society for Testing & Materials 100 Barr Harbor Dr. West Conshohocken, PA 19428-2959	HC/EC $25.00	American Society for Testing & Materials 100 Barr Harbor Dr. West Conshohocken, PA 19428-2959 Phone: (610) 832-9585 Fax: (610) 832-9555 url: http://www.astm.org e-mail: service@astm.org	No
32	L	ASTM	ASTM B487-85 Standard Test Method for Measurement of Metal Oxide Coating of Thickness by Microscopic Examination of a Cross Section American Society for Testing & Materials 100 Barr Harbor Dr. West Conshohocken, PA 19428-2959	HC/EC $30.00	American Society for Testing & Materials 100 Barr Harbor Dr. West Conshohocken, PA 19428-2959 Phone: (610) 832-9585 Fax: (610) 832-9555 url: http://www.astm.org e-mail: service@astm.org	No
33	L	ASTM	ASTM B499-96 Standard Test Method for Measurement of Coating Thicknesses by the Magnetic Method American Society for Testing & Materials 100 Barr Harbor Dr. West Conshohocken, PA 19428-2959	HC/EC $25.00	American Society for Testing & Materials 100 Barr Harbor Dr. West Conshohocken, PA 19428-2959 Phone: (610) 832-9585 Fax: (610) 832-9555 url: http://www.astm.org e-mail: service@astm.org	No

HC – Hard Copy
EC – Electric Copy

No.	Land/ Marine	Sort	Document/Standard	Cost	Contact/Purchasing Information	Reviewed
34	L	ASTM	ASTM B504-90 Methods for Measurement of Thickness of Metallic Coatings by the Coulometric Method American Society for Testing & Materials 100 Barr Harbor Dr. West Conshohocken, PA 19428-2959	HC/EC $25.00	American Society for Testing & Materials 100 Barr Harbor Dr. West Conshohocken, PA 19428-2959 Phone: (610) 832-9585 Fax: (610) 832-9555 url: http://www.astm.org e-mail: service@astm.org	No
35	L	ASTM	ASTM C168-00 Standard Terminology Relating to Thermal Insulating Materials American Society for Testing & Materials 100 Barr Harbor Dr. West Conshohocken, PA 19428-2959	HC/EC $30.00	American Society for Testing & Materials 100 Barr Harbor Dr. West Conshohocken, PA 19428-2959 Phone: (610) 832-9585 Fax: (610) 832-9555 url: http://www.astm.org e-mail: service@astm.org	No
36	L	ASTM	ASTM D1418-99 Standard Practice for Rubber and Rubber Lattices – Nomenclature American Society for Testing & Materials 100 Barr Harbor Dr. West Conshohocken, PA 19428-2959	HC/EC $25.00	American Society for Testing & Materials 100 Barr Harbor Dr. West Conshohocken, PA 19428-2959 Phone: (610) 832-9585 Fax: (610) 832-9555 url: http://www.astm.org e-mail: service@astm.org	No

HC – Hard Copy
EC – Electric Copy

No.	Land/ Marine	Sort	Document/Standard	Cost	Contact/Purchasing Information	Reviewed
37	L	ASTM	ASTM D1566-00 Standard Terminology Relating to Rubber American Society for Testing & Materials 100 Barr Harbor Dr. West Conshohocken, PA 19428-2959	HC/EC $35.00	American Society for Testing & Materials 100 Barr Harbor Dr. West Conshohocken, PA 19428-2959 Phone: (610) 832-9585 Fax: (610) 832-9555 url: http://www.astm.org e-mail: service@astm.org	No
38	L	ASTM	ASTM D2000-99 Standard Classification System for Rubber Products in Automotive Applications American Society for Testing & Materials 100 Barr Harbor Dr. West Conshohocken, PA 19428-2959	HC/EC $40.00	American Society for Testing & Materials 100 Barr Harbor Dr. West Conshohocken, PA 19428-2959 Phone: (610) 832-9585 Fax: (610) 832-9555 url: http://www.astm.org e-mail: service@astm.org	No
39	L	ASTM	ASTM E136-99e1 Standard Method of Test for Behavior of Materials in a Vertical Tube Furnace at 750° C American Society for Testing & Materials 100 Barr Harbor Dr. West Conshohocken, PA 19428-2959	HC/EC $30.00	American Society for Testing & Materials 100 Barr Harbor Dr. West Conshohocken, PA 19428-2959 Phone: (610) 832-9585 Fax: (610) 832-9555 url: http://www.astm.org e-mail: service@astm.org	No

HC – Hard Copy
EC – Electric Copy

No.	Land/ Marine	Sort	Document/Standard	Cost	Contact/Purchasing Information	Reviewed
40	L	ASTM/ANSI	ANSI/ASTM D1600-99 Terminology for Abbreviated Terms Relating to Plastics American Society for Testing & Materials 100 Barr Harbor Dr. West Conshohocken, PA 19428-2959	HC/EC $30.00	American Society for Testing & Materials 100 Barr Harbor Dr. West Conshohocken, PA 19428-2959 Phone: (610) 832-9585 Fax: (610) 832-9555 url: http://www.astm.org e-mail: service@astm.org	No
41	L	ASTM/ANSI	ANSI/ASTM D4000-00 Standard Classification System for Specifying Plastic Materials American Society for Testing & Materials 100 Barr Harbor Dr. West Conshohocken, PA 19428-2959	HC/EC $35.00	American Society for Testing & Materials 100 Barr Harbor Dr. West Conshohocken, PA 19428-2959 Phone: (610) 832-9585 Fax: (610) 832-9555 url: http://www.astm.org e-mail: service@astm.org	No
42	L	ASTM/ANSI	ANSI/ASTM D883-00 Terminology Relating to Plastics American Society for Testing & Materials 100 Barr Harbor Dr. West Conshohocken, PA 19428-2959	HC/EC $35.00	American Society for Testing & Materials 100 Barr Harbor Dr. West Conshohocken, PA 19428-2959 Phone: (610) 832-9585 Fax: (610) 832-9555 url: http://www.astm.org e-mail: service@astm.org	No

HC – Hard Copy
EC – Electric Copy

No.	Land/ Marine	Sort	Document/Standard	Cost	Contact/Purchasing Information	Reviewed
43	L	ASTM/ANSI	ANSI/ASTM E84-00a Standard Test Method for Surface Burning Characteristics of Building Materials American Society for Testing & Materials 100 Barr Harbor Dr. West Conshohocken, PA 19428-2959	HC/EC $35.00	American Society for Testing & Materials 100 Barr Harbor Dr. West Conshohocken, PA 19428-2959 Phone: (610) 832-9585 Fax: (610) 832-9555 url: http://www.astm.org e-mail: service@astm.org	No
44	L	AWWA	AWWA C510-97 Double Check Valve Backflow Prevention Assembly American Water Works Association 6666 W. Quincy Ave. Denver, CO 80235	HC $35.00	American Water Works Association 6666 W. Quincy Ave. Denver, CO 80235 Phone: (303) 794-7711 url: http://www.awwa.org e-mail: custscv@awwa.org	No
45	L	AWWA	AWWA C511-97 Reduced Pressure Principle Backflow Prevention Assembly American Water Works Association 6666 W. Quincy Ave. Denver, CO 80235	HC $35.00	American Water Works Association 6666 W. Quincy Ave. Denver, CO 80235 Phone: (303) 794-7711 url: http://www.awwa.org e-mail: custscv@awwa.org	No

HC – Hard Copy
EC – Electric Copy

No.	Land/ Marine	Sort	Document/Standard	Cost	Contact/Purchasing Information	Reviewed
46	L	AWWA/ANSI	ANSI/AWWA B100-96 Filtering Material American Water Works Association 6666 W. Quincy Ave. Denver, CO 80235	HC $24.00	American Water Works Association 6666 W. Quincy Ave. Denver, CO 80235 Phone: (303) 794-7711 url: http://www.awwa.org e-mail: custscv@awwa.org	No
47	L	BOCA	Building Officials and Code Administrators International	N/A	BOCA Headquarters 4051 W. Flossmoor Rd. Country Club Hills, IL 60478 Phone: (708) 799-2300 Fax: (708) 799-4981 url: www.bocai.org e-mail: info@bocai.org	No
48	L	CGA	CGA C-7 (2000) Method of Marking Portable Compressed Gas Containers to Identify the Material Contained Compressed Gas Association 1725 Jefferson Davis Highway Arlington, VA 22202-4100	HC $142.00	Compressed Gas Association 1725 Jefferson Davis Highway Arlington, VA 22202-4100 Phone: (703) 412-0900 Fax: (703) 412-0128 url: http://www.cganet.com	No

HC – Hard Copy
EC – Electric Copy

No.	Land/ Marine	Sort	Document/Standard	Cost	Contact/Purchasing Information	Reviewed
49	L	CGA	CGA P-9 (1992) The Inert Gases: Argon, Nitrogen and Helium Compressed Gas Association 1725 Jefferson Davis Highway Arlington, VA 22202-4100	HC $46.00	Compressed Gas Association 1725 Jefferson Davis Highway Arlington, VA 22202-4100 Phone: (703) 412-0900 Fax: (703) 412-0128 url: http://www.cganet.com	No
50	L	CGA	CGA S-1.1 (1994) Pressure Relief Device Standards – Part 1 – Cylinders for Compressed Gases Compressed Gas Association 1725 Jefferson Davis Highway Arlington, VA 22202-4100	HC $83.00	Compressed Gas Association 1725 Jefferson Davis Highway Arlington, VA 22202-4100 Phone: (703) 412-0900 Fax: (703) 412-0128 url: http://www.cganet.com	No
51	L	CGA	CGA S-1.2 (1995) Pressure Relief Device Standards – Part 2 – Cargo and Portable Tanks for Compressed Gases Compressed Gas Association 1725 Jefferson Davis Highway Arlington, VA 22202-4100	HC $83.00	Compressed Gas Association 1725 Jefferson Davis Highway Arlington, VA 22202-4100 Phone: (703) 412-0900 Fax: (703) 412-0128 url: http://www.cganet.com	No
52	L	CGA	CGA S-1.3 (1995) Pressure Relief Device Standards – Part 3 – Compressed Gas Storage Containers Compressed Gas Association 1725 Jefferson Davis Highway Arlington, VA 22202-4100	HC $74.00	Compressed Gas Association 1725 Jefferson Davis Highway Arlington, VA 22202-4100 Phone: (703) 412-0900 Fax: (703) 412-0128 url: http://www.cganet.com	No

HC – Hard Copy
EC – Electric Copy

No.	Land/ Marine	Sort	Document/Standard	Cost	Contact/Purchasing Information	Reviewed
53	L	CGA/ANSI	ANSI Z21.15-1997 Manually Operated Gas Valves for Applications, Appliance Connector Valves American National Standards Institute 11 West 42nd Street New York, NY 10036 Note: same as CGA 9.1	HC $263.00	Global Engineering Documents 15 Inverness Way East Englewood, CO 80112 Phone: (800) 854-7179 url: http://global.ihs.com e-mail: global@ihs.com	No
54	L	CGA/ANSI	ANSI Z21.18-1995 Gas Appliance Pressure Regulators American National Standards Institute 11 West 42nd Street New York, NY 10036 Note: same as CGA 6.3	HC $360.00	Global Engineering Documents 15 Inverness Way East Englewood, CO 80112 Phone: (800) 854-7179 url: http://global.ihs.com e-mail: global@ihs.com	No
55	L	CGA/ANSI	ANSI Z21.21-1995 Automatic Valves for Gas Appliances American National Standards Institute 11 West 42nd Street New York, NY 10036 Note: same as CGA 6.5	HC $383.00	Global Engineering Documents 15 Inverness Way East Englewood, CO 80112 Phone: (800) 854-7179 url: http://global.ihs.com e-mail: global@ihs.com	No

HC – Hard Copy
EC – Electric Copy

No.	Land/ Marine	Sort	Document/Standard	Cost	Contact/Purchasing Information	Reviewed
56	L	CGA/ANSI	ANSI Z21.24-1997 Metal Connectors for Gas Appliances American National Standards Institute 11 West 42nd Street New York, NY 10036 Note: same as CGA 6.10	HC $308.00	Global Engineering Documents 15 Inverness Way East Englewood, CO 80112 Phone: (800) 854-7179 url: http://global.ihs.com e-mail: global@ihs.com	No
57	L	CGA/ANSI	ANSI Z21.35-1995, and Addenda, Z21.35a-1997 Pilot Gas Filters American National Standards Institute 11 West 42nd Street New York, NY 10036 Note: same as CGA 6.8 and CGA 6.8a	HC $308.00	Global Engineering Documents 15 Inverness Way East Englewood, CO 80112 Phone: (800) 854-7179 url: http://global.ihs.com e-mail: global@ihs.com	No
58	L	CGA/ANSI	ANSI Z83.8-1996 Gas Unit Heaters International Approval Service 8501 East Pleasant Valley Road Cleveland, OH 44131 Note: same as CGA 2.6	HC $339.00	Global Engineering Documents 15 Inverness Way East Englewood, CO 80112 Phone: (800) 854-7179 url: http://global.ihs.com e-mail: global@ihs.com	No

HC – Hard Copy
EC – Electric Copy

No.	Land/ Marine	Sort	Document/Standard	Cost	Contact/Purchasing Information	Reviewed
59	L	DOE	DOE Office of Building Technology, State and Community Programs Document No. PNNL-12051, "PEM Fuel Cells for Commercial Buildings," November 1998 Brown, D.R. Pacific Northwest National Laboratory Note: prepared by Pacific Northwest National Laboratory under DOE Contract no. DE-AC06-76RLO 1830 for the DOE Office of Building Technology, State and Community Programs	N/A	Office of Building Technology, State and Community Programs U.S. Department of Energy 1000 Independence Ave, S.W. Washington, D.C. 20585-0121 Phone: (800) 342-5363 Fax: (202) 586-4403 url: www.eren.doe.gov/buildings	Yes
60	L	FC Bulletin	Fuel Cells Bulletin No. 23 (August 2000) "Development, adoption and implementation of codes and standards for fuel cells in the US" Conover, Dave	N/A	National Evaluation Service, Inc. 5203 Leesburg Pike, Suite 708 Falls Church, VA 22041 Phone: (703) 931-2187 Fax: (703) 931-6505 e-mail: Dconover@nateval.org	Yes
61	L	FC Bulletin	IEC TC 105: Fuel Cell Technologies (23-24 February 2000) "Codes and Standards for Fuel Cells – Status of Development, Adoption and Use in the United States,"	N/A	International Electrotechnical Commission url: www.iec.ch	Yes
62	L	FC Conference	E-mail from Joseph J. Lawton (31 May 2000) "Summary of Specs & Standards Workshop at Fuel Cells 2000 Conference"	N/A		Yes

HC – Hard Copy
EC – Electric Copy

No.	Land/ Marine	Sort	Document/Standard	Cost	Contact/Purchasing Information	Reviewed
63	L	FC Conference	Washington, DC (10-11 May 2000) "Trip Report on Fuel Cells Codes and Standards Conference"	N/A		Yes
64	L	FC Council	US Fuel Cell Council "Codes and Standards for Fuel Cells" Wichert, Robert, P.E. Technical Director	N/A	US Fuel Cell Council url: ftp://ftp.usfcc.com/RobertWichert-BriefingOne.pdf e-mail: wichert@fuelcells.org	Yes
65	L	FC Summit	DOE Fuel Cell Summit Newsletter, Vol. 1, Issue 1 U.S. Department of Energy 1000 Independence Ave, S.W. Washington, D.C. 20585-0121	N/A	Ronald J. Fiskum U.S. Department of Energy 1000 Independence Ave, S.W. Washington, D.C. 20585-0121 Phone: (202) 586-9154 Fax: (202) 586-5557 e-mail: Ronald.fiskum@ee.doe.gov	Yes
66	L	FC Summit	DOE Office of Power Technologies Fuel Cell Summit Newsletter, Vol. 1, Issue 1 U.S. Department of Energy 1000 Independence Ave, S.W. Washington, D.C. 20585-0121	N/A	Ronald J. Fiskum U.S. Department of Energy 1000 Independence Ave, S.W. Washington, D.C. 20585-0121 Phone: (202) 586-9154 Fax: (202) 586-5557 e-mail: Ronald.fiskum@ee.doe.gov	Yes

HC – Hard Copy
EC – Electric Copy

No.	Land/ Marine	Sort	Document/Standard	Cost	Contact/Purchasing Information	Reviewed
67	L	FC Summit	Presentation to Fuel Cells Summit IV (May 10-11 2000) "PC25 Commercial Fuel Cell Power Plant Codes and Standards" Scheffler, Glenn W. Chief Engineer	N/A	International Fuel Cells 195 Governor's Highway South Windsor, Connecticut 06074 Phone: (860) 727-2259	Yes
68	L	FC Summit	Presentation to Fuel Cells Summit IV (May 10-11 2000) "UL Standards Update" Jones, Harry P.	N/A	UL Corporate Headquarters 333 Pfingsten Road Northbrook, IL 60062-2096 USA Phone: (847) 272-8800 Fax: (847) 272-8129 url: www.ul.com e-mail: harry.p.jones@us.ul.com	Yes
69	L	ICBO	ICBO Mechanical and Electrical Mechanical and Electrical Equipment for Buildings, 9th Ed. International Conference of Building Officials 5360 Workman Mill Rd. Whittier, CA 90601-2298	HC $99.95	ICBO Headquarters 5360 Workman Mill Rd. Whittier, CA 90601-2298 Phone: (888) 699-0541 url: www.icbo.org	No

HC – Hard Copy
EC – Electric Copy

No.	Land/ Marine	Sort	Document/Standard	Cost	Contact/Purchasing Information	Reviewed
70	L	ICC	International Mechanical Code (2000) International Code Council 5203 Leesburg Pike, Suite 600 Falls Church, VA 22041	HC $46.55	ICBO Headquarters 5360 Workman Mill Rd. Whittier, CA 90601-2298 Phone: (888) 699-0541 url: www.icbo.org	No
71	L	IEEE	IEEE P1547 Standards for Distributed Generation Interconnection with Electrical Power Systems Institute of Electrical and Electronic Engineers Three Park Ave., 17th Floor New York, NY 10016	TBD	IEEE Operations Center 445 Hoes Lane Piscataway, NJ 08855-1331 Phone: (732) 981-0060 url: http://shop.ieee.org/store e-mail: stds-info@ieee.org	No
72	L	IEEE/ANSI	ANSI/IEEE 315-1975 (R1994), and Supplement, ANSI/IEEE 315a-1996 Graphic Symbols for Electrical and Electronics Diagrams (Including Reference Designation Class Designation Letters) Institute of Electrical and Electronic Engineers Three Park Ave., 17th Floor New York, NY 10016	HC $86.00	IEEE Operations Center 445 Hoes Lane Piscataway, NJ 08855-1331 Phone: (732) 981-0060 url: http://shop.ieee.org/store e-mail: stds-info@ieee.org	No

HC – Hard Copy
EC – Electric Copy

No.	Land/ Marine	Sort	Document/Standard	Cost	Contact/Purchasing Information	Reviewed
73	L	IEEE/ANSI	ANSI/IEEE C37.2-1996 Electrical power System Device Function Numbers and Contact Design Institute of Electrical and Electronic Engineers Three Park Ave., 17th Floor New York, NY 10016	HC $61.00	IEEE Operations Center 445 Hoes Lane Piscataway, NJ 08855-1331 Phone: (732) 981-0060 url: http://shop.ieee.org/store e-mail: stds-info@ieee.org	No
74	L	IEEE/ANSI	ANSI/IEEE C62.1-1984 (R1995) Surge Arresters for Alternating-Current Power Circuits Institute of Electrical and Electronic Engineers Three Park Ave., 17th Floor New York, NY 10016	TBD	IEEE Operations Center 445 Hoes Lane Piscataway, NJ 08855-1331 Phone: (732) 981-0060 url: http://shop.ieee.org/store e-mail: stds-info@ieee.org	No
75	L	IEEE/ASTM	ASTM/IEEE SI-10 Standard Practice for Use of the International System of Units (SI) (the Modernized Metric System) American Society for Testing & Materials 100 Barr Harbor Dr. West Conshohocken, PA 19428-2959	HC/EC $50.00	American Society for Testing & Materials 100 Barr Harbor Dr. West Conshohocken, PA 19428-2959 Phone: (610) 832-9585 Fax: (610) 832-9555 url: http://www.astm.org e-mail: service@astm.org	No

HC – Hard Copy
EC – Electric Copy

No.	Land/ Marine	Sort	Document/Standard	Cost	Contact/Purchasing Information	Reviewed
76	L	ISO	ISO 13984 (1999) Liquid Hydrogen – Land Vehicle Fueling System Interface International Standardization Organization 1, Rue de Varembe, Case postale 56, CH-1211 Geneve 20, Switzerland	HC/EC $42.00	International Standardization Organization 1, Rue de Varembe, Case postale 56, CH-1211 Geneve 20, Switzerland Phone: + 41 22 749 01 11 Fax: + 41 22 733 34 30 url: http://www.iso.ch e-mail: central@iso.ch	No
77	L	ISO	ISO 14687 (1999) Hydrogen Fuel – Product Specification International Standardization Organization 1, Rue de Varembe, Case postale 56, CH-1211 Geneve 20, Switzerland	HC/EC $35.00	International Standardization Organization 1, Rue de Varembe, Case postale 56, CH-1211 Geneve 20, Switzerland Phone: + 41 22 749 01 11 Fax: + 41 22 733 34 30 url: http://www.iso.ch e-mail: central@iso.ch	No
78	L	ISO	ISO 261 (1998) General Purpose Metric Screw Threads – General Plan International Standardization Organization 1, Rue de Varembe, Case postale 56, CH-1211 Geneve 20, Switzerland	HC/EC $27.50	International Standardization Organization 1, Rue de Varembe, Case postale 56, CH-1211 Geneve 20, Switzerland Phone: + 41 22 749 01 11 Fax: + 41 22 733 34 30 url: http://www.iso.ch e-mail: central@iso.ch	No

HC – Hard Copy
EC – Electric Copy

No.	Land/ Marine	Sort	Document/Standard	Cost	Contact/Purchasing Information	Reviewed
79	L	ISO	ISO 68-1 and ISO 68-2 (1998) General Purpose Screw Threads – Basic Profile (Parts 1 and 2) International Standardization Organization 1, Rue de Varembe, Case postale 56, CH-1211 Geneve 20, Switzerland	HC/EC $47.50	International Standardization Organization 1, Rue de Varembe, Case postale 56, CH-1211 Geneve 20, Switzerland Phone: + 41 22 749 01 11 Fax: + 41 22 733 34 30 url: http://www.iso.ch e-mail: central@iso.ch	No
80	L	ISO	ISO/AWI 17268 Gaseous Hydrogen – Land Vehicle Fueling Connectors International Standardization Organization 1, Rue de Varembe, Case postale 56, CH-1211 Geneve 20, Switzerland Note: under development	N/A	International Standardization Organization 1, Rue de Varembe, Case postale 56, CH-1211 Geneve 20, Switzerland Phone: + 41 22 749 01 11 Fax: + 41 22 733 34 30 url: http://www.iso.ch e-mail: central@iso.ch	No
81	L	ISO	ISO/CD 13985 Liquid Hydrogen – Land Vehicle Fuel Tanks International Standardization Organization 1, Rue de Varembe, Case postale 56, CH-1211 Geneve 20, Switzerland Note: under development	N/A	International Standardization Organization 1, Rue de Varembe, Case postale 56, CH-1211 Geneve 20, Switzerland Phone: + 41 22 749 01 11 Fax: + 41 22 733 34 30 url: http://www.iso.ch e-mail: central@iso.ch	No

HC – Hard Copy
EC – Electric Copy

No.	Land/ Marine	Sort	Document/Standard	Cost	Contact/Purchasing Information	Reviewed
82	L	ISO	ISO/WD 13986 Tank Containers for Multimodal Transportation of Liquid Hydrogen International Standardization Organization 1, Rue de Varembe, Case postale 56, CH-1211 Geneve 20, Switzerland Note: under development	N/A	International Standardization Organization 1, Rue de Varembe, Case postale 56, CH-1211 Geneve 20, Switzerland Phone: + 41 22 749 01 11 Fax: + 41 22 733 34 30 url: http://www.iso.ch e-mail: central@iso.ch	No
83	L	ISO	ISO/WD 15594 Airport Hydrogen Fueling Facility International Standardization Organization 1, Rue de Varembe, Case postale 56, CH-1211 Geneve 20, Switzerland Note: under development	N/A	International Standardization Organization 1, Rue de Varembe, Case postale 56, CH-1211 Geneve 20, Switzerland Phone: + 41 22 749 01 11 Fax: + 41 22 733 34 30 url: http://www.iso.ch e-mail: central@iso.ch	No
84	L	ISO	ISO/WD 15866 Gaseous Hydrogen Blends and Hydrogen Fuel – Service Stations International Standardization Organization 1, Rue de Varembe, Case postale 56, CH-1211 Geneve 20, Switzerland Note: under development	N/A	International Standardization Organization 1, Rue de Varembe, Case postale 56, CH-1211 Geneve 20, Switzerland Phone: + 41 22 749 01 11 Fax: + 41 22 733 34 30 url: http://www.iso.ch e-mail: central@iso.ch	No

HC – Hard Copy
EC – Electric Copy

No.	Land/ Marine	Sort	Document/Standard	Cost	Contact/Purchasing Information	Reviewed
85	L	ISO	ISO/WD 15869 Gaseous Hydrogen and Hydrogen Blends – Land Vehicle Fuel Tanks International Standardization Organization 1, Rue de Varembe, Case postale 56, CH-1211 Geneve 20, Switzerland Note: under development	N/A	International Standardization Organization 1, Rue de Varembe, Case postale 56, CH-1211 Geneve 20, Switzerland Phone: + 41 22 749 01 11 Fax: + 41 22 733 34 30 url: http://www.iso.ch e-mail: central@iso.ch	No
86	L	ISO	ISO/WD 15916 Basic Requirements for the Safety of Hydrogen Systems International Standardization Organization 1, Rue de Varembe, Case postale 56, CH-1211 Geneve 20, Switzerland Note: under development	N/A	International Standardization Organization 1, Rue de Varembe, Case postale 56, CH-1211 Geneve 20, Switzerland Phone: + 41 22 749 01 11 Fax: + 41 22 733 34 30 url: http://www.iso.ch e-mail: central@iso.ch	No
87	L	ISO	ISO 8178 Reciprocating Internal Combustion Engine – Exhaust Emission Requirements (Parts 1 through 9)	various	International Standardization Organization 1, Rue de Varembe, Case postale 56, CH-1211 Geneve 20, Switzerland Phone: + 41 22 749 01 11 Fax: + 41 22 733 34 30 url: http://www.iso.ch e-mail: central@iso.ch	No

HC – Hard Copy
EC – Electric Copy

No.	Land/ Marine	Sort	Document/Standard	Cost	Contact/Purchasing Information	Reviewed
88	L	MIL	MIL-STD-882D Standard Practice for System Safety US Department of Defense Department of the Navy Washington, DC 20362	N/A	USA Information Services, Inc. Phone: (800) 872-8830 url: www.usainfo.com	No
89	L	NEC	National Evaluation Protocol for Stationary Fuel Cell Power Systems (White Paper) National Evaluation Service 5203 Leesburg Pike, Suite 708 Falls Church, VA 22041	N/A	National Evaluation Service, Inc. 5203 Leesburg Pike, Suite 708 Falls Church, VA 22041 Phone: (703) 931-2187 Fax: (703) 931-6505 url: www.nateval.org e-mail: Dconover@nateval.org	Yes
90	L	NEMA	NEMA LA1-1992 (R1999) Surge Arresters National Electrical Manufacturers Association 1300 N. 17th Street, Suite 1847 Rosslyn, VA 22209	HC/EC $20.00	National Electrical Manufacturers Association 1300 N. 17th Street, Suite 1847 Rosslyn, VA 22209 Phone: (703) 841-3200 Fax: (703) 841-3300 url: http://www.nema.org e-mail: webmaster@nema.org	No

HC – Hard Copy
EC – Electric Copy

No.	Land/ Marine	Sort	Document/Standard	Cost	Contact/Purchasing Information	Reviewed
91	L	NEMA	NEMA ST1-1988 (R1997) Specialty Transformers (Except General Purpose Type) National Electrical Manufacturers Association 1300 N. 17th Street, Suite 1847 Rosslyn, VA 22209	HC/EC $28.00	National Electrical Manufacturers Association 1300 N. 17th Street, Suite 1847 Rosslyn, VA 22209 Phone: (703) 841-3200 Fax: (703) 841-3300 url: http://www.nema.org e-mail: webmaster@nema.org	No
92	L	NEMA/ANSI	ANSI/NEMA ICS 1-1993 (R2000) Industrial Control and Systems General Requirements National Electrical Manufacturers Association 1300 N. 17th Street, Suite 1847 Rosslyn, VA 22209	HC/EC $68.00	National Electrical Manufacturers Association 1300 N. 17th Street, Suite 1847 Rosslyn, VA 22209 Phone: (703) 841-3200 Fax: (703) 841-3300 url: http://www.nema.org e-mail: webmaster@nema.org	No
93	L	NFPA	NFPA 110-1999 Emergency Generators National Fire Protection Association 1 Batterymarch Park, P.O. Box 9101 Quincy, MA 02269	HC/EC $25.25	National Fire Protection Association 1 Batterymarch Park, P.O. Box 9101 Quincy, MA 02269 Phone: (617) 770-3000 Fax: (617) 770-0700 url: www.nfpa.org e-mail: Stds_admin@nfpa.org	No

HC – Hard Copy
EC – Electric Copy

No.	Land/ Marine	Sort	Document/Standard	Cost	Contact/Purchasing Information	Reviewed
94	L	NFPA	NFPA 13-1999 Standard for the Installation of Sprinkler Systems National Fire Protection Association 1 Batterymarch Park, P.O. Box 9101 Quincy, MA 02269	HC/EC $40.25	National Fire Protection Association 1 Batterymarch Park, P.O. Box 9101 Quincy, MA 02269 Phone: (617) 770-3000 Fax: (617) 770-0700 url: www.nfpa.org e-mail: Stds_admin@nfpa.org	No
95	L	NFPA	NFPA 220-1999 Standard on Types of Building Construction National Fire Protection Association 1 Batterymarch Park, P.O. Box 9101 Quincy, MA 02269	HC/EC $21.00	National Fire Protection Association 1 Batterymarch Park, P.O. Box 9101 Quincy, MA 02269 Phone: (617) 770-3000 Fax: (617) 770-0700 url: www.nfpa.org e-mail: Stds_admin@nfpa.org	No
96	L	NFPA	NFPA 50-1996 Standard for Bulk Oxygen Systems at Consumer Sites National Fire Protection Association 1 Batterymarch Park, P.O. Box 9101 Quincy, MA 02269	HC/EC $21.00	National Fire Protection Association 1 Batterymarch Park, P.O. Box 9101 Quincy, MA 02269 Phone: (617) 770-3000 Fax: (617) 770-0700 url: www.nfpa.org e-mail: Stds_admin@nfpa.org	No

HC – Hard Copy
EC – Electric Copy

No.	Land/ Marine	Sort	Document/Standard	Cost	Contact/Purchasing Information	Reviewed
97	L	NFPA	NFPA 50a-1999 Standard for Gaseous Hydrogen Systems at Consumer Sites National Fire Protection Association 1 Batterymarch Park, P.O. Box 9101 Quincy, MA 02269	HC/EC $21.00	National Fire Protection Association 1 Batterymarch Park, P.O. Box 9101 Quincy, MA 02269 Phone: (617) 770-3000 Fax: (617) 770-0700 url: www.nfpa.org e-mail: Stds_admin@nfpa.org	Yes
98	L	NFPA	NFPA 50b-1996 Standard for Liquefied Hydrogen Systems at Consumer Sites National Fire Protection Association 1 Batterymarch Park, P.O. Box 9101 Quincy, MA 02269	HC/EC $21.00	National Fire Protection Association 1 Batterymarch Park, P.O. Box 9101 Quincy, MA 02269 Phone: (617) 770-3000 Fax: (617) 770-0700 url: www.nfpa.org e-mail: Stds_admin@nfpa.org	Yes
99	L	NFPA	NFPA 51-1997 Standard for the design and Installation of Oxygen-Fuel Gas Systems for Welding, Cutting, and Allied Processes National Fire Protection Association 1 Batterymarch Park, P.O. Box 9101 Quincy, MA 02269	HC/EC $21.00	National Fire Protection Association 1 Batterymarch Park, P.O. Box 9101 Quincy, MA 02269 Phone: (617) 770-3000 Fax: (617) 770-0700 url: www.nfpa.org e-mail: Stds_admin@nfpa.org	No

HC – Hard Copy
EC – Electric Copy

No.	Land/ Marine	Sort	Document/Standard	Cost	Contact/Purchasing Information	Reviewed
100	L	NFPA	NFPA 853-2000 Standard for the Installation of Stationary Fuel Cell Power Plants National Fire Protection Association 1 Batterymarch Park, P.O. Box 9101 Quincy, MA 02269	HC/EC $21.00	National Fire Protection Association 1 Batterymarch Park, P.O. Box 9101 Quincy, MA 02269 Phone: (617) 770-3000 Fax: (617) 770-0700 url: www.nfpa.org e-mail: Stds_admin@nfpa.org	Yes
101	L	NFPA/ANSI	ANSI/NFPA 101-2000 Life Safety Code National Fire Protection Association 1 Batterymarch Park, P.O. Box 9101 Quincy, MA 02269	HC/EC $55.00	National Fire Protection Association 1 Batterymarch Park, P.O. Box 9101 Quincy, MA 02269 Phone: (617) 770-3000 Fax: (617) 770-0700 url: www.nfpa.org e-mail: Stds_admin@nfpa.org	No
102	L	NFPA/ANSI	ANSI/NFPA 15-1996 Standard for Water Spray Fixed Systems for Fire Protection National Fire Protection Association 1 Batterymarch Park, P.O. Box 9101 Quincy, MA 02269	HC/EC $28.00	National Fire Protection Association 1 Batterymarch Park, P.O. Box 9101 Quincy, MA 02269 Phone: (617) 770-3000 Fax: (617) 770-0700 url: www.nfpa.org e-mail: Stds_admin@nfpa.org	No

HC – Hard Copy
EC – Electric Copy

No.	Land/ Marine	Sort	Document/Standard	Cost	Contact/Purchasing Information	Reviewed
103	L	NFPA/ANSI	ANSI/NFPA 241-2000 Standard for Safeguarding Construction, Alteration, and Demolition Operations National Fire Protection Association 1 Batterymarch Park, P.O. Box 9101 Quincy, MA 02269	HC/EC $25.25	National Fire Protection Association 1 Batterymarch Park, P.O. Box 9101 Quincy, MA 02269 Phone: (617) 770-3000 Fax: (617) 770-0700 url: www.nfpa.org e-mail: Stds_admin@nfpa.org	No
104	L	NFPA/ANSI	ANSI/NFPA 24-1995 Standard for the Installation of Private Fire Service Mains and Their Appurtenances National Fire Protection Association 1 Batterymarch Park, P.O. Box 9101 Quincy, MA 02269	HC/EC $25.25	National Fire Protection Association 1 Batterymarch Park, P.O. Box 9101 Quincy, MA 02269 Phone: (617) 770-3000 Fax: (617) 770-0700 url: www.nfpa.org e-mail: Stds_admin@nfpa.org	No
105	L	NFPA/ANSI	ANSI/NFPA 251-1999 Standard Methods of Test of Fire Endurance of Building Construction and Materials National Fire Protection Association 1 Batterymarch Park, P.O. Box 9101 Quincy, MA 02269	HC/EC $21.00	National Fire Protection Association 1 Batterymarch Park, P.O. Box 9101 Quincy, MA 02269 Phone: (617) 770-3000 Fax: (617) 770-0700 url: www.nfpa.org e-mail: Stds_admin@nfpa.org	No

HC – Hard Copy
EC – Electric Copy

No.	Land/ Marine	Sort	Document/Standard	Cost	Contact/Purchasing Information	Reviewed
106	L	NFPA/ANSI	ANSI/NFPA 255-1996 Standard Method of Test of Surface Burning Characteristics of Building Materials National Fire Protection Association 1 Batterymarch Park, P.O. Box 9101 Quincy, MA 02269	HC/EC $21.00	National Fire Protection Association 1 Batterymarch Park, P.O. Box 9101 Quincy, MA 02269 Phone: (617) 770-3000 Fax: (617) 770-0700 url: www.nfpa.org e-mail: Stds_admin@nfpa.org	No
107	L	NFPA/ANSI	ANSI/NFPA 259-1998 Standard Test Method for Potential Heat of Building Materials National Fire Protection Association 1 Batterymarch Park, P.O. Box 9101 Quincy, MA 02269	HC/EC $21.00	National Fire Protection Association 1 Batterymarch Park, P.O. Box 9101 Quincy, MA 02269 Phone: (617) 770-3000 Fax: (617) 770-0700 url: www.nfpa.org e-mail: Stds_admin@nfpa.org	No
108	L	NFPA/ANSI	ANSI/NFPA 30-2000 Flammable and Combustible Liquids Code National Fire Protection Association 1 Batterymarch Park, P.O. Box 9101 Quincy, MA 02269	HC/EC $33.25	National Fire Protection Association 1 Batterymarch Park, P.O. Box 9101 Quincy, MA 02269 Phone: (617) 770-3000 Fax: (617) 770-0700 url: www.nfpa.org e-mail: Stds_admin@nfpa.org	No

HC – Hard Copy
EC – Electric Copy

No.	Land/ Marine	Sort	Document/Standard	Cost	Contact/Purchasing Information	Reviewed
109	L	NFPA/ANSI	ANSI/NFPA 496-1998 Standard for Purged and Pressurized Enclosures for Electrical Equipment National Fire Protection Association 1 Batterymarch Park, P.O. Box 9101 Quincy, MA 02269	HC/EC $21.00	National Fire Protection Association 1 Batterymarch Park, P.O. Box 9101 Quincy, MA 02269 Phone: (617) 770-3000 Fax: (617) 770-0700 url: www.nfpa.org e-mail: Stds_admin@nfpa.org	No
110	L	NFPA/ANSI	ANSI/NFPA 497-2000 Recommended Practice for Electrical Installations in Chemical Plants National Fire Protection Association 1 Batterymarch Park, P.O. Box 9101 Quincy, MA 02269	HC/EC $25.25	National Fire Protection Association 1 Batterymarch Park, P.O. Box 9101 Quincy, MA 02269 Phone: (617) 770-3000 Fax: (617) 770-0700 url: www.nfpa.org e-mail: Stds_admin@nfpa.org	No
111	L	NFPA/ANSI	ANSI/NFPA 52-1998 Compressed Natural Gas (CNG) Vehicular Fuel Systems National Fire Protection Association 1 Batterymarch Park, P.O. Box 9101 Quincy, MA 02269	HC/EC $25.25	National Fire Protection Association 1 Batterymarch Park, P.O. Box 9101 Quincy, MA 02269 Phone: (617) 770-3000 Fax: (617) 770-0700 url: www.nfpa.org e-mail: Stds_admin@nfpa.org	No

HC – Hard Copy
EC – Electric Copy

No.	Land/ Marine	Sort	Document/Standard	Cost	Contact/Purchasing Information	Reviewed
112	L	NFPA/ANSI	ANSI/NFPA 54-1999 National Fuel Gas Code National Fire Protection Association 1 Batterymarch Park, P.O. Box 9101 Quincy, MA 02269	HC/EC $33.25	National Fire Protection Association 1 Batterymarch Park, P.O. Box 9101 Quincy, MA 02269 Phone: (617) 770-3000 Fax: (617) 770-0700 url: www.nfpa.org e-mail: Stds_admin@nfpa.org	No
113	L	NFPA/ANSI	ANSI/NFPA 58-2001 Liquefied Petroleum Gas Code National Fire Protection Association 1 Batterymarch Park, P.O. Box 9101 Quincy, MA 02269	HC/EC $33.25	National Fire Protection Association 1 Batterymarch Park, P.O. Box 9101 Quincy, MA 02269 Phone: (617) 770-3000 Fax: (617) 770-0700 url: www.nfpa.org e-mail: Stds_admin@nfpa.org	No
114	L	NFPA/ANSI	ANSI/NFPA 70-1999 National Electric Code National Fire Protection Association 1 Batterymarch Park, P.O. Box 9101 Quincy, MA 02269	HC/EC $54.00	National Fire Protection Association 1 Batterymarch Park, P.O. Box 9101 Quincy, MA 02269 Phone: (617) 770-3000 Fax: (617) 770-0700 url: www.nfpa.org e-mail: Stds_admin@nfpa.org	Yes

HC – Hard Copy
EC – Electric Copy

No.	Land/ Marine	Sort	Document/Standard	Cost	Contact/Purchasing Information	Reviewed
115	L	NFPA/ANSI	ANSI/NFPA 80-1995 Fire Doors and Fire Windows National Fire Protection Association 1 Batterymarch Park, P.O. Box 9101 Quincy, MA 02269	HC/EC $28.00	National Fire Protection Association 1 Batterymarch Park, P.O. Box 9101 Quincy, MA 02269 Phone: (617) 770-3000 Fax: (617) 770-0700 url: www.nfpa.org e-mail: Stds_admin@nfpa.org	No
116	L	NFPA/ANSI	ANSI/NFPA 86C-1995 Industrial Furnaces Using a Special Processing Atmosphere National Fire Protection Association 1 Batterymarch Park, P.O. Box 9101 Quincy, MA 02269	HC/EC $28.00	National Fire Protection Association 1 Batterymarch Park, P.O. Box 9101 Quincy, MA 02269 Phone: (617) 770-3000 Fax: (617) 770-0700 url: www.nfpa.org e-mail: Stds_admin@nfpa.org	No
117	L	NFPA/ANSI	ANSI/NFPA 90A-1999 Standard for the Installation of Air-Conditioning and Ventilating Systems National Fire Protection Association 1 Batterymarch Park, P.O. Box 9101 Quincy, MA 02269	HC/EC $25.25	National Fire Protection Association 1 Batterymarch Park, P.O. Box 9101 Quincy, MA 02269 Phone: (617) 770-3000 Fax: (617) 770-0700 url: www.nfpa.org e-mail: Stds_admin@nfpa.org	No

HC – Hard Copy
EC – Electric Copy

No.	Land/ Marine	Sort	Document/Standard	Cost	Contact/Purchasing Information	Reviewed
118	L	UL	UL 125-1997 Valves for Anhydrous Ammonia and LP-Gas (Other than Safety Relief) Underwriters Laboratories Inc. 333 Pfingsten Road Northbrook, IL 60062	HC $103.00 EC $135.00	UL Corporate Headquarters 333 Pfingsten Road Northbrook, IL 60062-2096 USA Phone: (847) 272-8800 Fax: (847) 272-8129 url: www.ul.com e-mail: northbrook@us.ul.com	No
119	L	UL	UL 1604-1994 Electrical Equipment for Use in Class 1 and II, Division 2, and Class III Hazardous (Classified) Locations Underwriters Laboratories Inc. 333 Pfingsten Road Northbrook, IL 60062	HC $103.00 EC $135.00	UL Corporate Headquarters 333 Pfingsten Road Northbrook, IL 60062-2096 USA Phone: (847) 272-8800 Fax: (847) 272-8129 url: www.ul.com e-mail: northbrook@us.ul.com	No
120	L	UL	UL 1715-1994 Fire Test of Interior Finish Materials Underwriters Laboratories Inc. 333 Pfingsten Road Northbrook, IL 60062	HC $248.00 EC $285.00	UL Corporate Headquarters 333 Pfingsten Road Northbrook, IL 60062-2096 USA Phone: (847) 272-8800 Fax: (847) 272-8129 url: www.ul.com e-mail: northbrook@us.ul.com	No

HC – Hard Copy
EC – Electric Copy

No.	Land/ Marine	Sort	Document/Standard	Cost	Contact/Purchasing Information	Reviewed
121	L	UL	UL 1741-1991 Static Inverters and Charge Controllers Underwriters Laboratories Inc. 333 Pfingsten Road Northbrook, IL 60062	HC $269.00 EC $307.00	UL Corporate Headquarters 333 Pfingsten Road Northbrook, IL 60062-2096 USA Phone: (847) 272-8800 Fax: (847) 272-8129 url: www.ul.com e-mail: northbrook@us.ul.com	No
122	L	UL	UL 1773-1998 Termination Boxes Underwriters Laboratories Inc. 333 Pfingsten Road Northbrook, IL 60062	HC $248.00 EC $285.00	UL Corporate Headquarters 333 Pfingsten Road Northbrook, IL 60062-2096 USA Phone: (847) 272-8800 Fax: (847) 272-8129 url: www.ul.com e-mail: northbrook@us.ul.com	No
123	L	UL	UL 1778-1994 Uninterruptable Power Supply Equipment Underwriters Laboratories Inc. 333 Pfingsten Road Northbrook, IL 60062	HC $355.00 EC $393.00	UL Corporate Headquarters 333 Pfingsten Road Northbrook, IL 60062-2096 USA Phone: (847) 272-8800 Fax: (847) 272-8129 url: www.ul.com e-mail: northbrook@us.ul.com	No

HC – Hard Copy
EC – Electric Copy

No.	Land/ Marine	Sort	Document/Standard	Cost	Contact/Purchasing Information	Reviewed
124	L	UL	UL 1998-1-1994 Safety Related Software Underwriters Laboratories Inc. 333 Pfingsten Road Northbrook, IL 60062	HC $103.00 EC $135.00	UL Corporate Headquarters 333 Pfingsten Road Northbrook, IL 60062-2096 USA Phone: (847) 272-8800 Fax: (847) 272-8129 url: www.ul.com e-mail: northbrook@us.ul.com	No
125	L	UL	UL 1998-2-1998 Software in Programmable Components Underwriters Laboratories Inc. 333 Pfingsten Road Northbrook, IL 60062	HC $103.00 EC $135.00	UL Corporate Headquarters 333 Pfingsten Road Northbrook, IL 60062-2096 USA Phone: (847) 272-8800 Fax: (847) 272-8129 url: www.ul.com e-mail: northbrook@us.ul.com	No
126	L	UL	UL 2200-1998 Stationary Engine Generator Assemblies Underwriters Laboratories Inc. 333 Pfingsten Road Northbrook, IL 60062	HC $146.00 EC $183.00	UL Corporate Headquarters 333 Pfingsten Road Northbrook, IL 60062-2096 USA Phone: (847) 272-8800 Fax: (847) 272-8129 url: www.ul.com e-mail: northbrook@us.ul.com	No

HC – Hard Copy
EC – Electric Copy

No.	Land/ Marine	Sort	Document/Standard	Cost	Contact/Purchasing Information	Reviewed
127	L	UL	UL 3121-1-1998 Process Control Equipment Underwriters Laboratories Inc. 333 Pfingsten Road Northbrook, IL 60062	HC $232.00 EC $264.00	UL Corporate Headquarters 333 Pfingsten Road Northbrook, IL 60062-2096 USA Phone: (847) 272-8800 Fax: (847) 272-8129 url: www.ul.com e-mail: northbrook@us.ul.com	No
128	L	UL	UL 404-1997 Gauges, Indicating Pressure, for Compressed Gas Services Underwriters Laboratories Inc. 333 Pfingsten Road Northbrook, IL 60062	HC $103.00 EC $135.00	UL Corporate Headquarters 333 Pfingsten Road Northbrook, IL 60062-2096 USA Phone: (847) 272-8800 Fax: (847) 272-8129 url: www.ul.com e-mail: northbrook@us.ul.com	No
129	L	UL	UL 674-1994 Electric Motors and Generators for Hazardous (Classified) Locations Underwriters Laboratories Inc. 333 Pfingsten Road Northbrook, IL 60062	HC $103.00 EC $135.00	UL Corporate Headquarters 333 Pfingsten Road Northbrook, IL 60062-2096 USA Phone: (847) 272-8800 Fax: (847) 272-8129 url: www.ul.com e-mail: northbrook@us.ul.com	No

HC – Hard Copy
EC – Electric Copy

No.	Land/ Marine	Sort	Document/Standard	Cost	Contact/Purchasing Information	Reviewed
130	L	UL	UL 795-1999 Commercial-Industrial Gas-Heating Equipment Underwriters Laboratories Inc. 333 Pfingsten Road Northbrook, IL 60062	HC $232.00 EC $264.00	UL Corporate Headquarters 333 Pfingsten Road Northbrook, IL 60062-2096 USA Phone: (847) 272-8800 Fax: (847) 272-8129 url: www.ul.com e-mail: northbrook@us.ul.com	No
131	L	UL	UL 842-1997 Valves for Flammable Fluids Underwriters Laboratories Inc. 333 Pfingsten Road Northbrook, IL 60062	HC $103.00 EC $135.00	UL Corporate Headquarters 333 Pfingsten Road Northbrook, IL 60062-2096 USA Phone: (847) 272-8800 Fax: (847) 272-8129 url: www.ul.com e-mail: northbrook@us.ul.com	No
132	L	UL	UL 969-1995 Marking and Labeling Systems Underwriters Laboratories Inc. 333 Pfingsten Road Northbrook, IL 60062	HC $103.00 EC $135.00	UL Corporate Headquarters 333 Pfingsten Road Northbrook, IL 60062-2096 USA Phone: (847) 272-8800 Fax: (847) 272-8129 url: www.ul.com e-mail: northbrook@us.ul.com	No

HC – Hard Copy
EC – Electric Copy

No.	Land/ Marine	Sort	Document/Standard	Cost	Contact/Purchasing Information	Reviewed
133	L	UL	UL 991-1995 Standard for Test for Safety Related Controls Employing Solid State Devices Underwriters Laboratories Inc. 333 Pfingsten Road Northbrook, IL 60062	HC $103.00 EC $135.00	UL Corporate Headquarters 333 Pfingsten Road Northbrook, IL 60062-2096 USA Phone: (847) 272-8800 Fax: (847) 272-8129 url: www.ul.com e-mail: northbrook@us.ul.com	No
134	L	UL/ANSI	ANSI/UL 1002-1994 Electrically Operated Valves for Use in Hazardous (Classified) Locations Underwriters Laboratories Inc. 333 Pfingsten Road Northbrook, IL 60062	HC $103.00 EC $135.00	UL Corporate Headquarters 333 Pfingsten Road Northbrook, IL 60062-2096 USA Phone: (847) 272-8800 Fax: (847) 272-8129 url: www.ul.com e-mail: northbrook@us.ul.com	No
135	L	UL/ANSI	ANSI/UL 1004-1994 Electric Motors Underwriters Laboratories Inc. 333 Pfingsten Road Northbrook, IL 60062	HC $103.00 EC $135.00	UL Corporate Headquarters 333 Pfingsten Road Northbrook, IL 60062-2096 USA Phone: (847) 272-8800 Fax: (847) 272-8129 url: www.ul.com e-mail: northbrook@us.ul.com	No

HC – Hard Copy
EC – Electric Copy

No.	Land/ Marine	Sort	Document/Standard	Cost	Contact/Purchasing Information	Reviewed
136	L	UL/ANSI	ANSI/UL 1008-1996 Automatic Transfer Switches Underwriters Laboratories Inc. 333 Pfingsten Road Northbrook, IL 60062	HC $355.00 EC $393.00	UL Corporate Headquarters 333 Pfingsten Road Northbrook, IL 60062-2096 USA Phone: (847) 272-8800 Fax: (847) 272-8129 url: www.ul.com e-mail: northbrook@us.ul.com	No
137	L	UL/ANSI	ANSI/UL 1010-1995 Receptacle-Plug Combinations for Use in Hazardous (Classified) Locations Underwriters Laboratories Inc. 333 Pfingsten Road Northbrook, IL 60062	HC $312.00 EC $350.00	UL Corporate Headquarters 333 Pfingsten Road Northbrook, IL 60062-2096 USA Phone: (847) 272-8800 Fax: (847) 272-8129 url: www.ul.com e-mail: northbrook@us.ul.com	No
138	L	UL/ANSI	ANSI/UL 1012-1994 Power Units other than Class 2 Underwriters Laboratories Inc. 333 Pfingsten Road Northbrook, IL 60062	HC $189.00 EC $226.00	UL Corporate Headquarters 333 Pfingsten Road Northbrook, IL 60062-2096 USA Phone: (847) 272-8800 Fax: (847) 272-8129 url: www.ul.com e-mail: northbrook@us.ul.com	No

HC – Hard Copy
EC – Electric Copy

No.	Land/ Marine	Sort	Document/Standard	Cost	Contact/Purchasing Information	Reviewed
139	L	UL/ANSI	ANSI/UL 1020-1994 Thermal Cutoffs for Use in Electrical Appliances and Components Underwriters Laboratories Inc. 333 Pfingsten Road Northbrook, IL 60062	HC $103.00 EC $135.00	UL Corporate Headquarters 333 Pfingsten Road Northbrook, IL 60062-2096 USA Phone: (847) 272-8800 Fax: (847) 272-8129 url: www.ul.com e-mail: northbrook@us.ul.com	No
140	L	UL/ANSI	ANSI/UL 1054-1995 Special Use Switches Underwriters Laboratories Inc. 333 Pfingsten Road Northbrook, IL 60062	HC $103.00 EC $135.00	UL Corporate Headquarters 333 Pfingsten Road Northbrook, IL 60062-2096 USA Phone: (847) 272-8800 Fax: (847) 272-8129 url: www.ul.com e-mail: northbrook@us.ul.com	No
141	L	UL/ANSI	ANSI/UL 1203-2000 Explosion-Proof and Dust-Ignition-Proof Electrical Equipment for Use on Hazardous (Classified) Locations Underwriters Laboratories Inc. 333 Pfingsten Road Northbrook, IL 60062	HC $103.00 EC $135.00	UL Corporate Headquarters 333 Pfingsten Road Northbrook, IL 60062-2096 USA Phone: (847) 272-8800 Fax: (847) 272-8129 url: www.ul.com e-mail: northbrook@us.ul.com	No

HC – Hard Copy
EC – Electric Copy

No.	Land/ Marine	Sort	Document/Standard	Cost	Contact/Purchasing Information	Reviewed
142	L	UL/ANSI	ANSI/UL 144-1999 Pressure-Regulating Valves for LP Gas Underwriters Laboratories Inc. 333 Pfingsten Road Northbrook, IL 60062	HC $146.00 EC $183.00	UL Corporate Headquarters 333 Pfingsten Road Northbrook, IL 60062-2096 USA Phone: (847) 272-8800 Fax: (847) 272-8129 url: www.ul.com e-mail: northbrook@us.ul.com	No
143	L	UL/ANSI	ANSI/UL 252-1996 Compressed Gas Regulators Underwriters Laboratories Inc. 333 Pfingsten Road Northbrook, IL 60062	HC $103.00 EC $135.00	UL Corporate Headquarters 333 Pfingsten Road Northbrook, IL 60062-2096 USA Phone: (847) 272-8800 Fax: (847) 272-8129 url: www.ul.com e-mail: northbrook@us.ul.com	No
144	L	UL/ANSI	ANSI/UL 33-1993 Heat-Responsive Links for Fire Protection Service Underwriters Laboratories Inc. 333 Pfingsten Road Northbrook, IL 60062	HC $103.00 EC $135.00	UL Corporate Headquarters 333 Pfingsten Road Northbrook, IL 60062-2096 USA Phone: (847) 272-8800 Fax: (847) 272-8129 url: www.ul.com e-mail: northbrook@us.ul.com	No

HC – Hard Copy
EC – Electric Copy

No.	Land/ Marine	Sort	Document/Standard	Cost	Contact/Purchasing Information	Reviewed
145	L	UL/ANSI	ANSI/UL 353-1994 Limit Controls Underwriters Laboratories Inc. 333 Pfingsten Road Northbrook, IL 60062	HC $103.00 EC $135.00	UL Corporate Headquarters 333 Pfingsten Road Northbrook, IL 60062-2096 USA Phone: (847) 272-8800 Fax: (847) 272-8129 url: www.ul.com e-mail: northbrook@us.ul.com	No
146	L	UL/ANSI	ANSI/UL 372-1994 Primary Safety Controls for Gas- and Oil-Fired Appliances Underwriters Laboratories Inc. 333 Pfingsten Road Northbrook, IL 60062	HC $355.00 EC $393.00	UL Corporate Headquarters 333 Pfingsten Road Northbrook, IL 60062-2096 USA Phone: (847) 272-8800 Fax: (847) 272-8129 url: www.ul.com e-mail: northbrook@us.ul.com	No
147	L	UL/ANSI	ANSI/UL 429-1999 Electrically Operated Valves Underwriters Laboratories Inc. 333 Pfingsten Road Northbrook, IL 60062	HC $146.00 EC $183.00	UL Corporate Headquarters 333 Pfingsten Road Northbrook, IL 60062-2096 USA Phone: (847) 272-8800 Fax: (847) 272-8129 url: www.ul.com e-mail: northbrook@us.ul.com	No

HC – Hard Copy
EC – Electric Copy

No.	Land/ Marine	Sort	Document/Standard	Cost	Contact/Purchasing Information	Reviewed
148	L	UL/ANSI	ANSI/UL 499-1997 Electric Heating Appliances Underwriters Laboratories Inc. 333 Pfingsten Road Northbrook, IL 60062	HC $103.00 EC $135.00	UL Corporate Headquarters 333 Pfingsten Road Northbrook, IL 60062-2096 USA Phone: (847) 272-8800 Fax: (847) 272-8129 url: www.ul.com e-mail: northbrook@us.ul.com	No
149	L	UL/ANSI	ANSI/UL 50-1995 Enclosures for Electrical Equipment Underwriters Laboratories Inc. 333 Pfingsten Road Northbrook, IL 60062	HC $355.00 EC $393.00	UL Corporate Headquarters 333 Pfingsten Road Northbrook, IL 60062-2096 USA Phone: (847) 272-8800 Fax: (847) 272-8129 url: www.ul.com e-mail: northbrook@us.ul.com	No
150	L	UL/ANSI	ANSI/UL 506-2000 Specialty Transformers Underwriters Laboratories Inc. 333 Pfingsten Road Northbrook, IL 60062	HC $103.00 EC $135.00	UL Corporate Headquarters 333 Pfingsten Road Northbrook, IL 60062-2096 USA Phone: (847) 272-8800 Fax: (847) 272-8129 url: www.ul.com e-mail: northbrook@us.ul.com	No

HC – Hard Copy
EC – Electric Copy

No.	Land/ Marine	Sort	Document/Standard	Cost	Contact/Purchasing Information	Reviewed
151	L	UL/ANSI	ANSI/UL 508-1999 Industrial Control Equipment Underwriters Laboratories Inc. 333 Pfingsten Road Northbrook, IL 60062	HC $355.00 EC $393.00	UL Corporate Headquarters 333 Pfingsten Road Northbrook, IL 60062-2096 USA Phone: (847) 272-8800 Fax: (847) 272-8129 url: www.ul.com e-mail: northbrook@us.ul.com	No
152	L	UL/ANSI	ANSI/UL 521-1999 Heat Detectors for Fire-Protective Signaling Systems Underwriters Laboratories Inc. 333 Pfingsten Road Northbrook, IL 60062	HC $103.00 EC $135.00	UL Corporate Headquarters 333 Pfingsten Road Northbrook, IL 60062-2096 USA Phone: (847) 272-8800 Fax: (847) 272-8129 url: www.ul.com e-mail: northbrook@us.ul.com	No
153	L	UL/ANSI	ANSI/UL 536-1997 Flexible Metallic Hose Underwriters Laboratories Inc. 333 Pfingsten Road Northbrook, IL 60062	HC $103.00 EC $135.00	UL Corporate Headquarters 333 Pfingsten Road Northbrook, IL 60062-2096 USA Phone: (847) 272-8800 Fax: (847) 272-8129 url: www.ul.com e-mail: northbrook@us.ul.com	No

HC – Hard Copy
EC – Electric Copy

No.	Land/ Marine	Sort	Document/Standard	Cost	Contact/Purchasing Information	Reviewed
154	L	UL/ANSI	ANSI/UL 555-1999 Fire Dampers Underwriters Laboratories Inc. 333 Pfingsten Road Northbrook, IL 60062	HC $355.00 EC $393.00	UL Corporate Headquarters 333 Pfingsten Road Northbrook, IL 60062-2096 USA Phone: (847) 272-8800 Fax: (847) 272-8129 url: www.ul.com e-mail: northbrook@us.ul.com	No
155	L	UL/ANSI	ANSI/UL 62-1997 Flexible Cord and Fixture Wire Underwriters Laboratories Inc. 333 Pfingsten Road Northbrook, IL 60062	HC $103.00 EC $135.00	UL Corporate Headquarters 333 Pfingsten Road Northbrook, IL 60062-2096 USA Phone: (847) 272-8800 Fax: (847) 272-8129 url: www.ul.com e-mail: northbrook@us.ul.com	No
156	L	UL/ANSI	ANSI/UL 632-2000 Electrically Actuated Transmitters Underwriters Laboratories Inc. 333 Pfingsten Road Northbrook, IL 60062	HC $189.00 EC $226.00	UL Corporate Headquarters 333 Pfingsten Road Northbrook, IL 60062-2096 USA Phone: (847) 272-8800 Fax: (847) 272-8129 url: www.ul.com e-mail: northbrook@us.ul.com	No

HC – Hard Copy
EC – Electric Copy

No.	Land/ Marine	Sort	Document/Standard	Cost	Contact/Purchasing Information	Reviewed
157	L	UL/ANSI	ANSI/UL 67-1993 Panelboards Underwriters Laboratories Inc. 333 Pfingsten Road Northbrook, IL 60062	HC $312.00 EC $350.00	UL Corporate Headquarters 333 Pfingsten Road Northbrook, IL 60062-2096 USA Phone: (847) 272-8800 Fax: (847) 272-8129 url: www.ul.com e-mail: northbrook@us.ul.com	No
158	L	UL/ANSI	ANSI/UL 674-1994 Electric Motors and Generators for Use in Hazardous Locations, Class 1, Groups C and D, Class II, Groups E, F and G Underwriters Laboratories Inc. 333 Pfingsten Road Northbrook, IL 60062	HC $103.00 EC $135.00	UL Corporate Headquarters 333 Pfingsten Road Northbrook, IL 60062-2096 USA Phone: (847) 272-8800 Fax: (847) 272-8129 url: www.ul.com e-mail: northbrook@us.ul.com	No
159	L	UL/ANSI	ANSI/UL 698-1995 Industrial Control Equipment for Use in Hazardous (Classified) Locations Underwriters Laboratories Inc. 333 Pfingsten Road Northbrook, IL 60062	HC $210.00 EC $248.00	UL Corporate Headquarters 333 Pfingsten Road Northbrook, IL 60062-2096 USA Phone: (847) 272-8800 Fax: (847) 272-8129 url: www.ul.com e-mail: northbrook@us.ul.com	No

HC – Hard Copy
EC – Electric Copy

No.	Land/ Marine	Sort	Document/Standard	Cost	Contact/Purchasing Information	Reviewed
160	L	UL/ANSI	ANSI/UL 705-1994 Power Ventilators Underwriters Laboratories Inc. 333 Pfingsten Road Northbrook, IL 60062	HC $189.00 EC $226.00	UL Corporate Headquarters 333 Pfingsten Road Northbrook, IL 60062-2096 USA Phone: (847) 272-8800 Fax: (847) 272-8129 url: www.ul.com e-mail: northbrook@us.ul.com	No
161	L	UL/ANSI	ANSI/UL 723-1996 Surface Burning Characteristics of Building Materials Underwriters Laboratories Inc. 333 Pfingsten Road Northbrook, IL 60062	HC $103.00 EC $135.00	UL Corporate Headquarters 333 Pfingsten Road Northbrook, IL 60062-2096 USA Phone: (847) 272-8800 Fax: (847) 272-8129 url: www.ul.com e-mail: northbrook@us.ul.com	No
162	L	UL/ANSI	ANSI/UL 778-1996 Motor-Operated Water Pumps Underwriters Laboratories Inc. 333 Pfingsten Road Northbrook, IL 60062	HC $146.00 EC $183.00	UL Corporate Headquarters 333 Pfingsten Road Northbrook, IL 60062-2096 USA Phone: (847) 272-8800 Fax: (847) 272-8129 url: www.ul.com e-mail: northbrook@us.ul.com	No

HC – Hard Copy
EC – Electric Copy

No.	Land/ Marine	Sort	Document/Standard	Cost	Contact/Purchasing Information	Reviewed
163	L	UL/ANSI	ANSI/UL 796-1999 Printed-Wiring Boards Underwriters Laboratories Inc. 333 Pfingsten Road Northbrook, IL 60062	HC $103.00 EC $135.00	UL Corporate Headquarters 333 Pfingsten Road Northbrook, IL 60062-2096 USA Phone: (847) 272-8800 Fax: (847) 272-8129 url: www.ul.com e-mail: northbrook@us.ul.com	No
164	L	UL/ANSI	ANSI/UL 823-1995 Electric Heaters for Use in Hazardous (Classified) Locations Underwriters Laboratories Inc. 333 Pfingsten Road Northbrook, IL 60062	HC $189.00 EC $226.00	UL Corporate Headquarters 333 Pfingsten Road Northbrook, IL 60062-2096 USA Phone: (847) 272-8800 Fax: (847) 272-8129 url: www.ul.com e-mail: northbrook@us.ul.com	No
165	L	UL/ANSI	ANSI/UL 83-1998 Thermoplastic-Insulated Wires and Cables Underwriters Laboratories Inc. 333 Pfingsten Road Northbrook, IL 60062	HC $146.00 EC $183.00	UL Corporate Headquarters 333 Pfingsten Road Northbrook, IL 60062-2096 USA Phone: (847) 272-8800 Fax: (847) 272-8129 url: www.ul.com e-mail: northbrook@us.ul.com	No

HC – Hard Copy
EC – Electric Copy

No.	Land/ Marine	Sort	Document/Standard	Cost	Contact/Purchasing Information	Reviewed
166	L	UL/ANSI	ANSI/UL 834-1995 Electric Heating, Water Supply, and Power Boilers Underwriters Laboratories Inc. 333 Pfingsten Road Northbrook, IL 60062	HC $103.00 EC $135.00	UL Corporate Headquarters 333 Pfingsten Road Northbrook, IL 60062-2096 USA Phone: (847) 272-8800 Fax: (847) 272-8129 url: www.ul.com e-mail: northbrook@us.ul.com	No
167	L	UL/ANSI	ANSI/UL 844-1995 Electrical Lighting Fixtures for Use in Hazardous (Classified) Locations Underwriters Laboratories Inc. 333 Pfingsten Road Northbrook, IL 60062	HC $210.00 EC $248.00	UL Corporate Headquarters 333 Pfingsten Road Northbrook, IL 60062-2096 USA Phone: (847) 272-8800 Fax: (847) 272-8129 url: www.ul.com e-mail: northbrook@us.ul.com	No
168	L	UL/ANSI	ANSI/UL 873-1994 Temperature-Indicating and –Regulating Equipment Underwriters Laboratories Inc. 333 Pfingsten Road Northbrook, IL 60062	HC $355.00 EC $393.00	UL Corporate Headquarters 333 Pfingsten Road Northbrook, IL 60062-2096 USA Phone: (847) 272-8800 Fax: (847) 272-8129 url: www.ul.com e-mail: northbrook@us.ul.com	No

HC – Hard Copy
EC – Electric Copy

No.	Land/ Marine	Sort	Document/Standard	Cost	Contact/Purchasing Information	Reviewed
169	L	UL/ANSI	ANSI/UL 877-1993 Circuit Breakers and Circuit-Breaker Enclosures for Use in Hazardous (Classified) Locations Underwriters Laboratories Inc. 333 Pfingsten Road Northbrook, IL 60062	HC $103.00 EC $135.00	UL Corporate Headquarters 333 Pfingsten Road Northbrook, IL 60062-2096 USA Phone: (847) 272-8800 Fax: (847) 272-8129 url: www.ul.com e-mail: northbrook@us.ul.com	No
170	L	UL/ANSI	ANSI/UL 886-1994 Outlet Boxes and Fittings for Use in Hazardous (Classified) Locations Underwriters Laboratories Inc. 333 Pfingsten Road Northbrook, IL 60062	HC $146.00 EC $183.00	UL Corporate Headquarters 333 Pfingsten Road Northbrook, IL 60062-2096 USA Phone: (847) 272-8800 Fax: (847) 272-8129 url: www.ul.com e-mail: northbrook@us.ul.com	No
171	L	UL/ANSI	ANSI/UL 891-1998 Dead-Front Switchboards Underwriters Laboratories Inc. 333 Pfingsten Road Northbrook, IL 60062	HC $269.00 EC $307.00	UL Corporate Headquarters 333 Pfingsten Road Northbrook, IL 60062-2096 USA Phone: (847) 272-8800 Fax: (847) 272-8129 url: www.ul.com e-mail: northbrook@us.ul.com	No

HC – Hard Copy
EC – Electric Copy

No.	Land/ Marine	Sort	Document/Standard	Cost	Contact/Purchasing Information	Reviewed
172	L	UL/ANSI	ANSI/UL 894-1993 Switches for Use in Hazardous (Classified) Locations Underwriters Laboratories Inc. 333 Pfingsten Road Northbrook, IL 60062	HC $146.00 EC $183.00	UL Corporate Headquarters 333 Pfingsten Road Northbrook, IL 60062-2096 USA Phone: (847) 272-8800 Fax: (847) 272-8129 url: www.ul.com e-mail: northbrook@us.ul.com	No
173	L	UL/ANSI	ANSI/UL 900-1994 Air Filter Units Underwriters Laboratories Inc. 333 Pfingsten Road Northbrook, IL 60062	HC $103.00 EC $135.00	UL Corporate Headquarters 333 Pfingsten Road Northbrook, IL 60062-2096 USA Phone: (847) 272-8800 Fax: (847) 272-8129 url: www.ul.com e-mail: northbrook@us.ul.com	No
174	L	UL/ANSI	ANSI/UL 913-1997 Intrinsically Safe Apparatus and Associated Apparatus for Use in Class I, II and III, Division 1, Hazardous (Classified) Locations Underwriters Laboratories Inc. 333 Pfingsten Road Northbrook, IL 60062	HC $312.00 EC $350.00	UL Corporate Headquarters 333 Pfingsten Road Northbrook, IL 60062-2096 USA Phone: (847) 272-8800 Fax: (847) 272-8129 url: www.ul.com e-mail: northbrook@us.ul.com	No

HC – Hard Copy
EC – Electric Copy

No.	Land/ Marine	Sort	Document/Standard	Cost	Contact/Purchasing Information	Reviewed
175	L	UL/ANSI	ANSI/UL 98-1994 Enclosed and Dead-Front Switches Underwriters Laboratories Inc. 333 Pfingsten Road Northbrook, IL 60062	HC $103.00 EC $135.00	UL Corporate Headquarters 333 Pfingsten Road Northbrook, IL 60062-2096 USA Phone: (847) 272-8800 Fax: (847) 272-8129 url: www.ul.com e-mail: northbrook@us.ul.com	No
176	M	ABS	ABS Part 4 (2000) Rules for Building and Classing Steel Vessels – Vessel Systems and Machinery American Bureau of Shipping 16855 Northchase Drive Houston, TX 77060	HC $50.00	American Bureau of Shipping 16855 Northchase Drive Houston, TX 77060 Phone: (281) 877-5800 Fax: (281) 877-5802 url: www.eagle.org e-mail: abs-amer@eagle.org	Yes
177	M	ABS	ABS Part 5 (2000) Rules for Building and Classing Steel Vessels – Specific Vessel Types (2 parts) American Bureau of Shipping 16855 Northchase Drive Houston, TX 77060	HC $100.00	American Bureau of Shipping 16855 Northchase Drive Houston, TX 77060 Phone: (281) 877-5800 Fax: (281) 877-5802 url: www.eagle.org e-mail: abs-amer@eagle.org	No

HC – Hard Copy
EC – Electric Copy

No.	Land/ Marine	Sort	Document/Standard	Cost	Contact/Purchasing Information	Reviewed
178	M	CFR	CFR Title 40, Chapter 1, Part 89 (R2000) Protection of Environment National Archives and Records Administrations 700 Pennsylvania Ave., NW Washington, DC 20408	N/A	National Archives and Records Administrations 700 Pennsylvania Ave., NW Washington, DC 20408 Phone: (800) 234-8861 url: www.gpo.gov	Yes
179	M	CFR	CFR Title 46, Chapter 1, Parts 38, 54, 56, 58, 62, 111, 119, 128 and 171-190 (R2000) Shipping National Archives and Records Administrations 700 Pennsylvania Ave., NW Washington, DC 20408	N/A	National Archives and Records Administrations 700 Pennsylvania Ave., NW Washington, DC 20408 Phone: (800) 234-8861 url: www.gpo.gov	Yes
180	M	DOE	DOE Office of Power Technologies "Integration of Hydrogen Technology into Maritime Applications," May 2000 DCH Technology, Inc. 27811 Avenue Hopkins, Suite 6 Valencia, CA 91355 Note: prepared by DCH Technology under DOE contract no. DE-FG01-99EE35102 for the DOE Office of Power Technologies	N/A	Office of Power Technologies U.S. Department of Energy 1000 Independence Ave, S.W. Washington, D.C. 20585-0121 Phone: (800) 342-5363 Fax: (202) 586-4403 url: www.eren.doe.gov/power	Yes

HC – Hard Copy
EC – Electric Copy

No.	Land/ Marine	Sort	Document/Standard	Cost	Contact/Purchasing Information	Reviewed
181	M	FCE	FCE Quarterly Review (10 November 1999) "Conceptual Development of a Ship Service Fuel Cell" Fuel Cell Energy, Inc. 3 Great Pasture Road Danbury, CT 06813 Note: prepared under contract no. N00167-97-C-0080	N/A	Fuel Cell Energy, Inc. 3 Great Pasture Road Danbury, CT 06813 Phone: (203) 825-6000	Yes
182	M	IEEE	IEEE 45-1998 Recommended Practices for Electric Installations on Shipboard Institute of Electrical and Electronic Engineers Three Park Ave., 17th Floor New York, NY 10016	HC $101.00 EC $152.00	IEEE Operations Center 445 Hoes Lane Piscataway, NJ 08855-1331 Phone: (732) 981-0060 url: http://shop.ieee.org/store e-mail: stds-info@ieee.org	Yes
183	M	IMO	Annex VI to MARPOL 73/78 (1997) Technical Code on Control of Emission of Nitrogen Oxides from Marine Diesel Engines International Maritime Organization 4 Albert Embankment London SE1 7SR United Kingdom	HC $21.00	IMO – Publishing Service 4 Albert Embankment London SE1 7SR United Kingdom url: www.imo.org e-mail: publications-sales@imo.org	Yes
184	M	MIL	MIL-G-21296B Generator Set, Diesel Engine (DC and AC) Spec. US Department of Defense Department of the Navy Washington, DC 20362	N/A	USA Information Services, Inc. Phone: (800) 872-8830 url: www.usainfo.com	Yes

HC – Hard Copy
EC – Electric Copy

No.	Land/ Marine	Sort	Document/Standard	Cost	Contact/Purchasing Information	Reviewed
185	M	MIL	MIL-G-22077C Gas Turbine Generator (DC and AC) Spec. US Department of Defense Department of the Navy Washington, DC 20362	N/A	USA Information Services, Inc. Phone: (800) 872-8830 url: www.usainfo.com	Yes
186	M	MIL	MIL-STD-1399 Interface Standard for Shipboard Systems US Department of Defense Department of the Navy Washington, DC 20362	N/A	USA Information Services, Inc. Phone: (800) 872-8830 url: www.usainfo.com	Yes
187	M	NAVSEA	NAVSEA GENSPEC (1995) General Specifications for Ships of the United States Navy Department of the Navy Naval Sea Systems Command 2531 Jefferson Davis Highway Arlington, VA 22242-5160	N/A	Naval Sea Systems Command 2531 Jefferson Davis Highway Arlington, VA 22242-5160 Phone: (877) 418-6824 url: www.navsea.navy.mil	Yes
188	M	SNAME	SNAME Technical and Research Report R-55 (2000) An Evaluation of Fuel Cells for Commercial Ship Applications Bolind, Alan M.	N/A	Society of Naval Architects and Marine Engineers 601 Pavonia Ave. Jersey City, NJ 07306 Phone: (800) 798-2188 Fax: (201) 798-4975 url: www.sname.org e-mail: coali-poutre@sname.org	Yes

HC – Hard Copy
EC – Electric Copy

No.	Land/ Marine	Sort	Document/Standard	Cost	Contact/Purchasing Information	Reviewed
189	M	SOLAS	Safety of Life at Sea (1997) International Maritime Organization 4 Albert Embankment London SE1 7SR United Kingdom	HC $86.75	IMO – Publishing Service 4 Albert Embankment London SE1 7SR United Kingdom url: www.imo.org e-mail: publications-sales@imo.org	Yes

HC – Hard Copy
EC – Electric Copy