ERDC/CERL TR-01-28

Construction Engineering Research Laboratory

US Army Corps of Engineers®
Engineer Research and Development Center

Site Evaluation for Application of Fuel Cell Technology

U.S. Military Academy, West Point, NY

Michael J. Binder, Franklin H. Holcomb, and William R. Taylor

April 2001

20010614 091

Approved for public release; distribution is unlimited.

Foreword

In fiscal years 93 and 94, Congress provided funds for natural gas utilization equipment, part of which was specifically designated for procurement of natural gas fuel cells for power generation at military installations. The purchase, installation, and ongoing monitoring of 30 fuel cells provided by these appropriations has come to be known as the "DOD Fuel Cell Demonstration Program." Additional funding was provided by: the Office of the Deputy Under Secretary of Defense for Industrial Affairs & Installations, ODUSD (IA&I)/HE&E; the Strategic Environmental Research & Development Program (SERDP); the Assistant Chief of Staff for Installation Management (ACSIM); the U.S. Army Center for Public Works (CPW); the Naval Facilities Engineering Service Center (NFESC); and Headquarters (HQ), Air Force Civil Engineer Support Agency (AFCESA).

This report documents work done at U.S. Military Academy, West Point, NY. Special thanks is owed to the U.S. Military Academy points of contact (POCs), Don Michaud and Bob Kronk, for providing investigators with access to needed information for this work. The work was performed by the Energy Branch (CF-E), of the Facilities Division (CF), Construction Engineering Research Laboratory (CERL). The CERL Principal Investigator was Michael J. Binder. Part of this work was performed by Science Applications International Corp. (SAIC), under Contract DACA88-94-D-0020, task orders 0002, 0006, 0007, 0010, and 0012. The technical editor was William J. Wolfe, Information Technology Laboratory. Larry M. Windingland is Chief, CEERD-CF-E, and L. Michael Golish is Chief, CEERD-CF. The associated Technical Director was Gary W. Schanche. The Acting Director of CERL is William D. Goran.

CERL is an element of the U.S. Army Engineer Research and Development Center (ERDC), U.S. Army Corps of Engineers. The Director of ERDC is Dr. James R. Houston and the Commander is COL James S. Weller.

DISCLAIMER

The contents of this report are not to be used for advertising, publication, or promotional purposes. Citation of trade names does not constitute an official endorsement or approval of the use of such commercial products. All product names and trademarks cited are the property of their respective owners.

The findings of this report are not to be construed as an official Department of the Army position unless so designated by other authorized documents.

DESTROY THIS REPORT WHEN IT IS NO LONGER NEEDED. DO NOT RETURN IT TO THE ORIGINATOR.

Contents

Foreword 2

List of Figures and Tables 4

1 Introduction 5

Background 5
Objective 6
Approach 6
Units of Weight and Measure 7

2 Site Description 8

Site Layout 8
Electrical System 8
Steam/Hot Water System 9
Space Heating System 9
Space Cooling System 10
Fuel Cell Location 10
Fuel Cell Interfaces 11

3 Economic Analysis 14

4 Conclusions and Recommendations 18

Appendix: Fuel Cell Site Evaluation Form 19

CERL Distribution 26

Report Documentation Page 27

List of Figures and Tables

Figures

1 West Point Power Plant layout 9
2 Proposed fuel cell location, West Point Power Plant 10
3 Proposed fuel cell site layout and interfaces 11
4 West Point fuel cell thermal interface 12

Tables

1 Companion ERDC/CERL site evaluation reports 7
2 West Point Central Plant make-up water usage data 13
3 West Point Military Academy electric bills 15
4 West Point Military Academy gas bills 16
5 Orange and Rockland Utilities—West Point electric rate schedule 16
6 Economic savings of fuel cell design alternatives (West Point) 17

1 Introduction

Background

Fuel cells generate electricity through an electrochemical process that combines hydrogen and oxygen to generate direct current (DC) electricity. Fuel cells are an environmentally clean, quiet, and a highly efficient method for generating electricity and heat from natural gas and other fuels. Air emissions from fuel cells are so low that several Air Quality Management Districts in the United States have exempted fuel cells from requiring operating permits. Today's natural gas-fueled fuel cell power plants operate at electrical conversion efficiencies of 40 to 50 percent; these efficiencies are predicted to climb to 50 to 60 percent in the near future. In fact, if the heat from the fuel cell process is used in a cogeneration system, efficiencies can exceed 85 percent. By comparison, current conventional coal-based technologies operate at efficiencies of 33 to 35 percent.

Phosphoric Acid Fuel Cells (PAFCs) are in the initial stages of commercialization. While PAFCs are not now economically competitive with other more conventional energy production technologies, current cost projections predict that PAFC systems will become economically competitive within the next few years as market demand increases.

Fuel cell technology has been found suitable for a growing number of applications. The National Aeronautics and Space Administration (NASA) has used fuel cells for many years as the primary power source for space missions and currently uses fuel cells in the Space Shuttle program. Private corporations have recently been working on various approaches for developing fuel cells for stationary applications in the utility, industrial, and commercial markets. Researchers at the U.S. Army Engineer Research and Development Center (ERDC), Construction Engineering Research Laboratory (CERL) have actively participated in the development and application of advanced fuel cell technology since fiscal year 1993 (FY93), and have successfully executed several research and demonstration work units with a total funding of approximately $55M.

As of November 1997, 30 commercially available fuel cell power plants and their thermal interfaces have been installed at Department of Defense (DOD) locations, CERL managed 29 of these installations. Consequently, the DOD is the

owner of the largest fleet of fuel cells worldwide. CERL researchers have developed a methodology for selecting and evaluating application sites, have supervised the design and installation of fuel cells, and have actively monitored the operation and maintenance of fuel cells, and compiled "lessons learned" for feedback to manufacturers. This accumulated expertise and experience has enabled CERL to lead in the advancement of fuel cell technology through major efforts such as the DOD Fuel Cell Demonstration Program, the Climate Change Fuel Cell Program, research and development efforts aimed at fuel cell product improvement and cost reduction, and conferences and symposiums dedicated to the advancement of fuel cell technology and commercialization.

This report presents an overview of the information collected at U.S. Military Academy, West Point, NY along with a conceptual fuel cell installation layout and description of potential benefits the technology can provide at that location. Similar summaries of the site evaluation surveys for the remaining 28 sites where CERL has managed and continues to monitor fuel cell installation and operation are available in the companion volumes to this report (Table 1).

Objective

The objective of this work was to evaluate U.S. Military Academy as a potential location for a fuel cell application.

Approach

On 15 and 16 March 1995, Science Applications International Corporation (SAIC) visited the United States Military Academy (the site) located in West Point, NY to investigate it as a potential location for a 200 kW phosphoric acid fuel cell. This report presents an overview of information collected at the site along with a conceptual fuel cell installation layout and description of potential benefits. The Appendix to this report contains a copy of the site evaluation form filled out at the site.

Table 1. Companion ERDC/CERL site evaluation reports.

Location	Report No.
Pine Bluff Arsenal, AR	TR 00-15
Naval Oceanographic Office, John C. Stennis Space Center, MS	TR 01-3
Fort Bliss, TX	TR 01-13
Fort Huachuca, AZ	TR 01-14
Naval Air Station Fallon, NV	TR 01-15
Construction Battalion Center (CBC), Port Hueneme, CA	TR 01-16
Fort Eustis, VA	TR 01-17
Watervliet Arsenal, Albany, NY	TR 01-18
911th Airlift Wing, Pittsburgh, PA	TR 01-19
Westover Air Reserve Base (ARB), MA	TR 01-20
Naval Education Training Center, Newport, RI	TR 01-21
U.S. Naval Academy, Annapolis, MD	TR 01-22
Davis-Monthan AFB, AZ	TR 01-23
Picatinny Arsenal, NJ	TR 01-24
U.S. Military Academy, West Point, NY	TR 01-28
Barksdale Air Force Base (AFB), LA	TR 01-29
Naval Hospital, Naval Air Station Jacksonville, FL	TR 01-30
Nellis AFB, NV	TR 01-31
Naval Hospital, Marine Corps Air Ground Combat Center (MCAGCC), Twentynine Palms, CA	TR 01-32
National Defense Center for Environmental Excellence (NDCEE), Johnstown, PA	TR 01-33
934th Airlift Wing, Minneapolis, MN	TR 01-38
Laughlin AFB, TX	TR 01-41
Fort Richardson, AK	TR 01-42
Kirtland AFB, NM	TR 01-43
Subase New London, Groton, CT	TR 01-44
Little Rock AFB, AR	TR 01-47
U.S. Army Soldier Systems Center, Natick, MA	TR 01-49
Edwards AFB, CA	TR 01-Draft
Naval Hospital, Marine Corps Base Camp Pendleton, CA	TR 01-Draft

Units of Weight and Measure

U.S. standard units of measure are used throughout this report. A table of conversion factors for Standard International (SI) units is provided below.

1 ft	=	0.305 m
1 mile	=	1.61 km
1 acre	=	0.405 ha
1 gal	=	3.78 L
°F	=	°C (X 1.8) + 32

2 Site Description

The U.S. Military Academy in West Point, NY is located approximately 60 miles north of New York City. The Academy has more than 4,000 students enrolled. Temperatures at the Site range from the 0 °F to over 90 °F throughout the year.

Initially, three specific applications for the 200 kW fuel cell were discussed. A laundry facility was eliminated because it operated only 8-10 hours per day, 5 days per week. This would have resulted in low thermal utilization (< 30 percent). The Site hospital was eliminated because of its relatively small size (68 beds) and the reduced summer load (summer break for students). Also, no domestic hot water load data was available for the hospital making it difficult to assess the potential thermal utilization. The third application considered was the main power plant for the Academy (Building 604). The plant has a steam generation capacity of 370,000 lb/hr and an electrical generation capacity of 4.25 MW. The power plant also houses the electrical substation for the Site.

Site Layout

Figure 1 shows the facility layout for Building 604. The power plant building is located on a hill near the Hudson River. It has a footprint of about 20,000 sq ft with as many as five stories depending on the location within the building. The three boilers are located on the east side of the building. The electrical generation equipment and 480 volt switch gear are located on the west end of the building. Electric transformers for the substation are located in the parking lot on the southwest end of the building. Water softeners are located at the south end of the building at the entrance to the parking lot.

Electrical System

The power house has two 32.5 kV to 4.16 kV transformers (2,800 kVA each) that serve the Academy. Multiple transformers are located inside the power house. Two 4,160/480 volt transformers (500 kVA) serve Building 604. There were plans to upgrade the power plant substation and internal transformers in 1995. Fuel cell construction was to be coordinated with the electrical contractor.

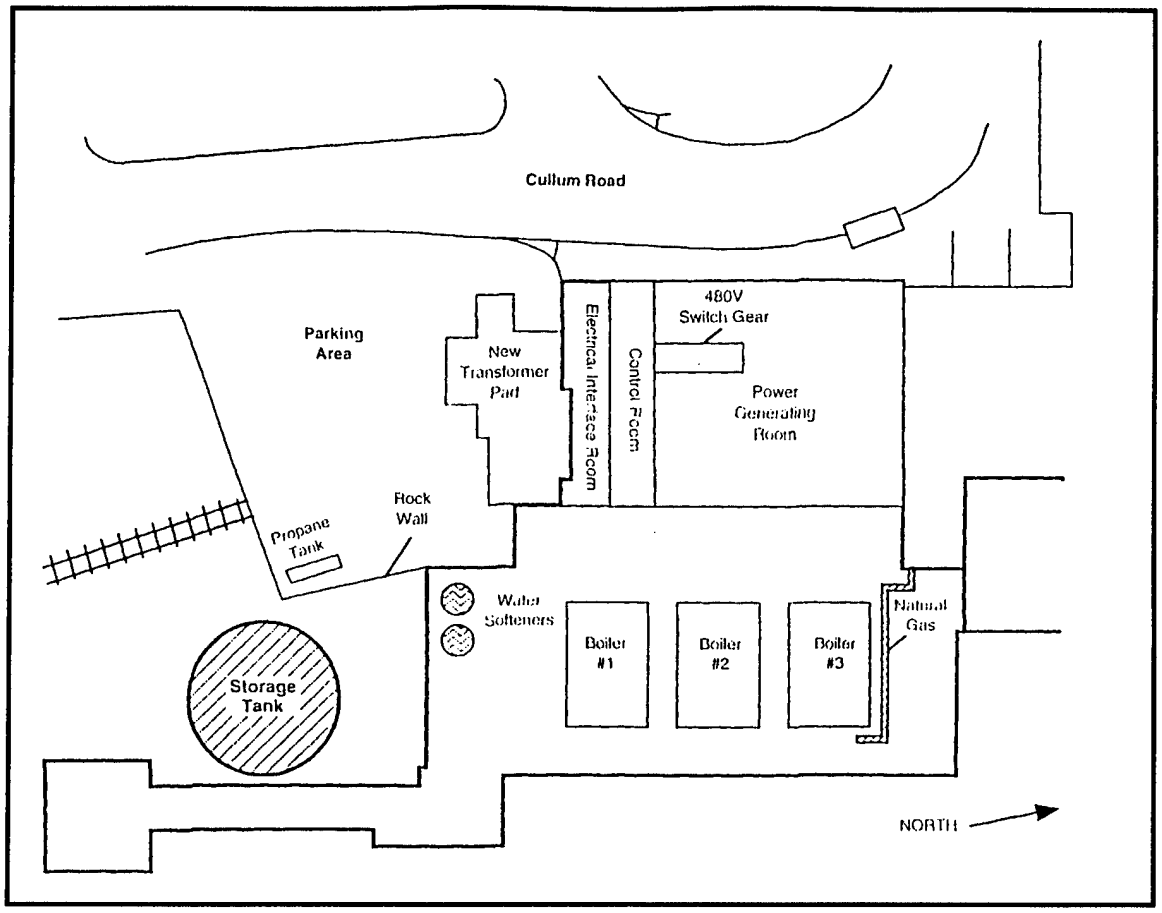

Figure 1. West Point Power Plant layout.

Steam/Hot Water System

The Site has over 22 mi of steam distribution lines used to provide heating, cooling, and hot water throughout the Academy. There are two E. Keeler Co. 200,000 lb/hr boilers (derated to 150,000 lb/hr) built in 1967, and one Campella Power boiler, which is rated at 70,000 lb/hr (1993). In addition to supplying heat throughout the campus buildings, the boilers power the three steam turbines (4.25 MW total capacity). The superheated steam is 100 psi at 427 °F. In the summer, the power plant supplies low pressure steam at 12-13 psi.

Space Heating System

Steam is used in the individual buildings for space heating. Heating is normally required mid-October through mid-April.

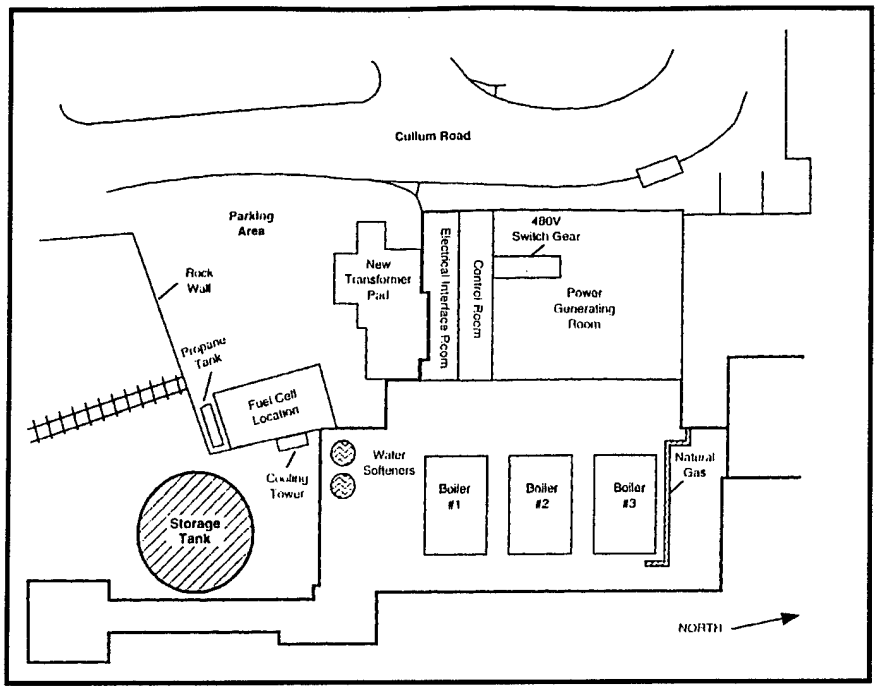

Figure 2. Proposed fuel cell location, West Point Power Plant.

Space Cooling System

There are two buildings with absorption chillers driven by the steam system. The Officers Club has a single 350 ton chiller and Thayer Hall has two chillers totaling 350 tons. The chillers normally operate mid-April through mid-October.

Fuel Cell Location

The proposed location for the fuel cell is in the parking area south of Building 604 (Figure 2). A propane tank is currently located in this spot. The Site is willing to rotate the tank 90 degrees in an east-west direction parallel to the south wall. The fuel cell would then be located in a north-south direction just north of the propane tank.

Figure 3 shows a detailed layout of the fuel cell site area and interfaces. Removable steel and concrete poles should be placed around the fuel cell and N_2 bottles to protect it from vehicles in the vicinity and allow for maintenance activities. The thermal piping run will be approximately 70 ft (60 ft to the building and 10 ft to the piping interface). The electric connection will require a wiring run of approximately 150 ft to the 480 volt switch gear inside the power generating room. The wiring should be trenched over to the building and then mounted against the wall before going through the wall into the building.

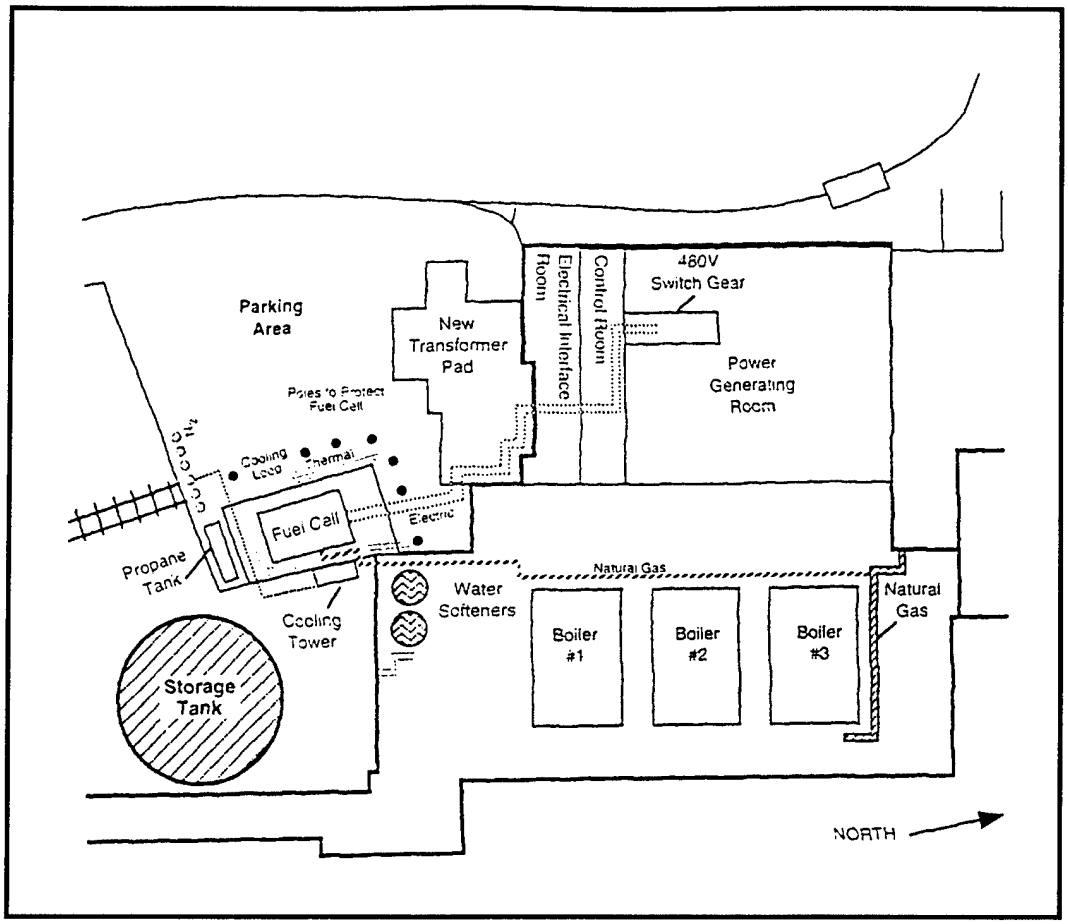

Figure 3. Proposed fuel cell site layout and interfaces.

The existing natural gas line will be tapped into and a new line will be run approximately 150 ft to the fuel cell. The gas pipe will exit the building on the south wall and then follow the building and parking lot wall to the fuel cell. A boiler blow down tank is located against the south wall next to the proposed cooling tower location and should be used as the drain for the fuel cell.

Fuel Cell Interfaces

The electrical output of the fuel cell will be connected to a 480 volt panel inside the power generating room of the power plant. There is an empty panel, but a new switch will have to be procured. Because the existing panel is old, a custom switch will probably have to be ordered. This may required a long lead time, so efforts to identify a supplier should be made early in the design process. The panel is powered through a 4160/480 volt, 500 kVA transformer. All of the fuel cell electrical output will be used at the central plant as the demand of the power plant is well above 200 kW. No grid-isolated loads will be connected to the emergency power output terminals of the fuel cell.

The thermal load identified for the central plant is to pre-heat the boiler make-up water. The make-up water will be diverted through the fuel cell after the water softeners and before entering the deaerator (Figure 4). A circulating pump should be used to ensure that the make-up water preferentially flows through the fuel cell without restricting the water flow to the boilers during periods of high water demand.

Based on monthly log data, the make-up water flow averaged between 9.5 gpm in October and 47.2 gpm in February (Table 2). The annual average make-up water flow was 24.5 gpm. Assuming an average inlet water temperature of 60 °F and an average supply temperature (from the fuel cell) of 140 °F, it is estimated that 87 percent of the fuel cell's thermal output could be utilized by the Site over a year (see Table 2 for calculation). Since these are average numbers, it is possible that the fuel cell may not be able to deliver the entire average load. If 20 percent of this load could not be met by the fuel cell, then the estimated thermal utilization would be 70 percent (87 percent * [1- 0.20]). No hourly load data was available. It was assumed that the hourly make-up load is fairly uniform due to the diverse nature of the Site load. No thermal storage is recommended.

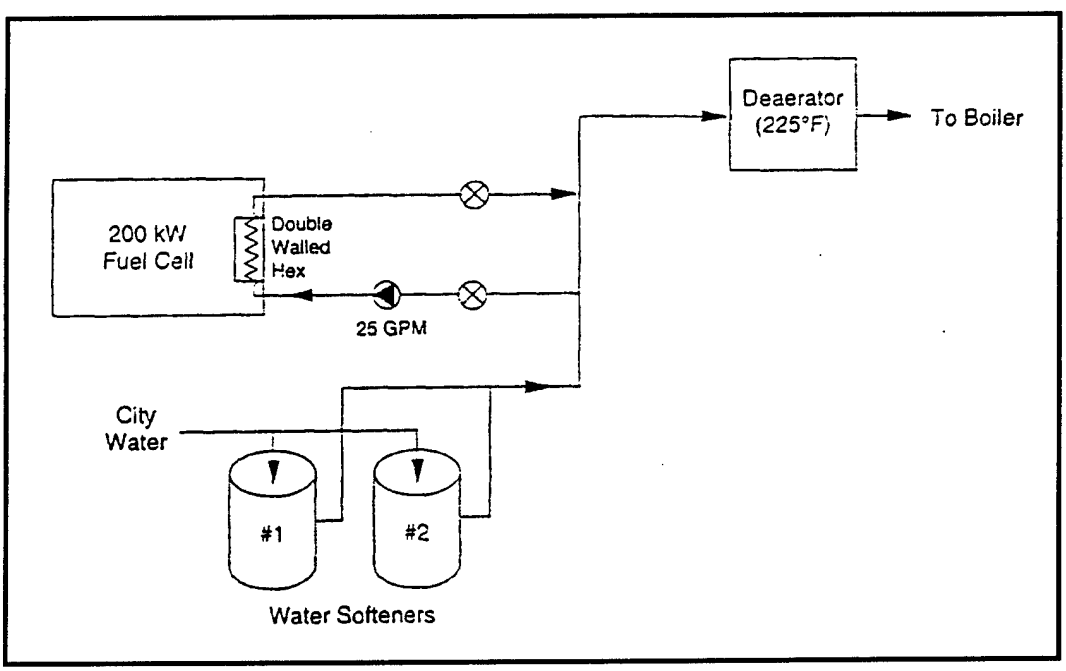

Figure 4. West Point fuel cell thermal interface.

Table 2. West Point Central Plant make-up water usage data.

Month-Yr	Make-Up H_2O (gal)	Days/ Month	Avg. Flow[1] (GPM)	Avg. Load[2] (kBtu/hr)	Thermal[3] Utilization
Oct-93	422,778	31	9.5	380	54%
Nov-93	553,797	30	12.8	514	73%
Dec-93	1,505,889	31	33.7	1,352	100%
Jan-94	2,005,421	31	44.9	1,801	100%
Feb-94	1,903,335	28	47.2	1,892	100%
Mar-94	2,099,686	31	47.0	1,885	100%
Apr-94	1,024,126	30	23.7	950	100%
May-94	893,886	31	20.0	803	100%
Jun-94	590,876	30	13.7	548	78%
Jul-94	741,080	31	16.6	665	95%
Aug-94	660,389	31	14.8	593	85%
Sep-94	484,621	30	11.2	450	64%
Total/Average	12,885,884	365	24.5	986	87%

1 = Make-up gal / (days/month * 24 hours/day * 60 min/hr)

2 = GPM * 60 min/hr * 8.35 lb/gal * (140-60 °F) * 1 Btu/lb °F/(1000 Btu/kBtu)

3 = Sum of monthly thermal utilizations / 12 months (max utilization =100%)

3 Economic Analysis

The Site is located in Orange and Rockland Utilities' service territory. Electric billing data were obtained for March 1994 through February 1995 and are shown in Table 3. The average rate ranged from 5.07 cents/kWh in January to 6.42 cents/kWh in August. The average electric rate paid by the Site during this period was 5.78 cents/kWh. The Site is billed under a contract rate schedule. The schedule includes seasonal demand charges for summer (June through September) and winter.

The Site purchases natural gas from Central Hudson Gas & Electric under a contract rate schedule. Table 4 shows the natural gas consumption and costs for entire Site. The average gas cost is $5.18/MCF ($5.05/MBtu). For the first 500 MCF, the Site is charged $2,500 ($5.00/MCF; $4.88/MBtu). The Site average rate varies monthly based on gas cost adjustments and season. Since the Site uses well above 500 MCF per month, the fuel cell natural gas will be charged at the rate after the first 500 MCF. Table 4 lists an average gas rate at this secondary level ("tier") of $5.19/MCF ($5.06/MBtu).

Table 5 lists the demand and energy electric rates under the Orange and Rockland contract rate schedule for West Point. This table also lists the first year electric savings from a 200 kW fuel cell based on a 90 percent electric capacity factor. Total first year electric savings using a 90 percent electric capacity factor was $79,585, which includes full demand charge savings (i.e., the fuel cell is operating at 200 kW during the Site's peak electric demand for each of the 12 monthly billing periods). The calculation includes an average fuel adjustment of -1.726 cents/kWh (see Table 3). The average cost of electricity displaced by the fuel cell is 5.05 cents/kWh. This is lower than the average rate paid by the site (5.78 cents/kWh) because the fuel cell is displacing "2nd tier" kWh.

Table 6 lists electrical/thermal savings and natural gas costs for a number of energy savings scenarios. Three thermal utilization scenarios were evaluated: maximum utilization (100 percent), estimated "high" thermal utilization (87 percent), and estimated "low" thermal utilization (70 percent). A displaced boiler efficiency of 75 percent was assumed. For electric demand reduction from the fuel cell, full demand savings, 50 percent demand savings and no demand savings scenarios were calculated. The average natural gas rate of $5.06/MBtu was used.

Table 3. West Point Military Academy electric bills.

Month-Yr	kW	kWh	Fuel Adj. Rate	1st Tier kWh Costs	2nd Tier kWh Costs	Demand Charge	Fuel Adj. Charge	Total Costs	Average $/kWh	2nd Tier* $/kWh
Mar-94	10,382	4,792,800	$0.01199	$175,670	$89,106	$87,627	($57,466)	$294,938	$0.0615	$0.0411
Apr-94	11,290	5,714,400	$0.01273	$191,020	$123,591	$95,284	($72,744)	$337,151	$0.0590	$0.0404
May-94	11,995	5,635,200	$0.01701	$202,959	$108,146	$101,239	($95,855)	$316,489	$0.0562	$0.0361
Jun-94	13,709	6,460,800	$0.01718	$231,953	$124,687	$163,957	($110,997)	$409,601	$0.0634	$0.0359
Jul-94	14,364	7,627,200	$0.01827	$243,039	$176,186	$171,793	($139,349)	$451,669	$0.0592	$0.0348
Aug-94	13,356	6,310,800	$0.01630	$225,984	$122,342	$159,738	($102,866)	$405,198	$0.0642	$0.0368
Sep-94	14,581	6,819,600	$0.01675	$246,702	$129,853	$174,383	($114,228)	$436,710	$0.0640	$0.0364
Oct-94	11,441	5,302,800	$0.01805	$193,578	$99,327	$96,560	($95,716)	$293,750	$0.0554	$0.0351
Nov-94	10,231	5,221,200	$0.01965	$173,112	$114,263	$86,351	($102,597)	$271,129	$0.0519	$0.0335
Dec-94	10,382	4,674,000	$0.02095	$175,670	$82,798	$87,627	($97,920)	$248,175	$0.0531	$0.0322
Jan-95	11,088	5,875,200	$0.02021	$187,609	$135,341	$93,583	($118,738)	$297,795	$0.0507	$0.0329
Feb-95	10,786	5,282,400	$0.01798	$182,492	$108,681	$91,030	($94,978)	$287,226	$0.0544	$0.0351
Tot./Avg.	11,967	69,716,400	$0.01726	$2,429,788	$1,414,321	$1,409,175	($1,203,452)	$4,049,832	$0.0578	$0.0358

* Does not include demand charge

Table 4. West Point Military Academy gas bills.

Month-Yr	MCF	Total	Average $/MCF	Displaced* $/MCF
Mar-94	46,796	$252,040	$5.39	$5.39
Apr-94	27,368	$144,344	$5.27	$5.28
May-94	21,703	$116,173	$5.35	$5.36
Jun-94	16,145	$86,510	$5.36	$5.37
Jul-94	13,991	$76,392	$5.46	$5.48
Aug-94	17,439	$93,097	$5.34	$5.35
Sep-94	16,832	$92,674	$5.51	$5.52
Oct-94	21,523	$113,586	$5.28	$5.28
Nov-94	30,542	$147,091	$4.82	$4.81
Dec-94	39,567	$186,940	$4.72	$4.72
Jan-95	50,484	$236,542	$4.69	$4.68
Feb-95	49,213	$245,837	$5.00	$5.00
Tot./Avg.	351,603	$1,791,228	$5.18	$5.19

* Displaced $/MCF = (Total $ - $2,500) / (MCF-500)

Table 5. Orange and Rockland Utilities—West Point electric rate schedule.

	Summer	Winter	Total
Demand Charge			
On-Peak ($/kW)	$11.96	$8.44	
Energy Charge			
First 300 hours/kW demand ($/kWh)	$0.0564	$0.0564	
Over 300 hours/kW demand ($/kWh)	$0.0531	$0.0531	
Average fuel adjustment ($/kWh)*	($0.01726)	($0.01726)	
Savings/Year (90% ELF)			
Energy (>300 hours)	$18,889	$37,623	$56,513
Demand (200 kW)	$9,568	$13,504	$23,072
Total Savings	$28,457	$51,127	$79,585
Average $/kWh	$0.0505		

* The average fuel adjustment charge is applied to all kWh and is derived from the average fuel adjustment paid by the site between March 1994 and February 1995.

The results in Table 6 show net savings of $36,335 for the 87 percent thermal utilization and full demand savings. If only 70 percent of the thermal can be recovered, then net savings would be $30,005. The analysis is a general overview of the economics. For the first 5 years, ONSI will be responsible for the fuel cell maintenance. Maintenance costs are not reflected in this analysis, but could represent a significant impact on net energy savings. Since load profile data were not available, energy savings could vary depending on actual electrical and thermal utilization.

Table 6. Economic savings of fuel cell design alternatives (West Point).

Case	ECF	TU	Displaced kWh	Displaced Gas (MBtu)	Electrical Savings	Thermal Savings	Nat. Gas Cost	Net Savings
A - Max. Thermal	90%	100%	1,576,800	7,358	$79,585	$37,231	$75,642	$41,175
A - Estimated Thermal (High)	90%	87%	1,576,800	6,401	$79,585	$32,391	$75,642	$36,335
A - Estimated Thermal (Low)	90%	70%	1,576,800	5,151	$79,585	$26,062	$75,642	$30,005
B - Max. Thermal	90%	100%	1,576,800	7,358	$68,049	$37,231	$75,642	$29,639
B - Estimated Thermal (High)	90%	87%	1,576,800	6,401	$68,049	$32,391	$75,642	$24,799
B - Estimated Thermal (Low)	90%	70%	1,576,800	5,151	$68,049	$26,062	$75,642	$18,469
C - Max. Thermal	90%	100%	1,576,800	7,358	$56,513	$37,231	$75,642	$18,103
C - Estimated Thermal (High)	90%	87%	1,576,800	6,401	$56,513	$32,391	$75,642	$13,263
C - Estimated Thermal (Low)	90%	70%	1,576,800	5,151	$56,513	$26,062	$75,642	$6,933

Assumptions:

Natural Gas Rate:	$5.06 /MBtu ($5.19/MCF / 1.025 MBtu/MCF)
Displaced Electricity Rate:	$0.0358 /kWh (includes $0.01726/kWh fuel adjustment)
Displaced Summer Demand Charge:	$11.96 /kW
Displaced Winter Demand Charge:	$8.44 /kW
Fuel Cell Thermal Output:	700,000 Btu/hour
Fuel Cell Electrical Efficiency (HHV):	36%
Seasonal Boiler Efficiency:	75%

CASE A: full fuel cell demand savings

CASE B: 50% of full fuel cell demand savings

CASE C: zero fuel cell demand savings

ECF = Fuel cell electric capacity factor

TU = Thermal utilization

4 Conclusions and Recommendations

The West Point power plant (Building 604) represents a good application for a 200 kW fuel cell. The fuel cell can be sited in the southeast corner of the parking area, which is relatively close to the thermal interface. The propane tank will have to be moved to accommodate the fuel cell. A high percentage of the thermal output can be utilized by the power plant boilers by interfacing with the make-up water system.

The Site is currently using #5 fuel oil. They will be switching from #5 to #2 for ease of handling. The use of fuel oil has caused some problems for the Site. The fuel lines must be heated with steam to keep the fuel oil flowing in the winter. Also, spillage during refilling of the tank has required somewhat costly clean-up. The boilers are currently being replaced with two new boilers rated at 15,000 lb/hr at 160 psi, 420 °F.

Appendix: Fuel Cell Site Evaluation Form

Site Name: **United States Military Academy - Central Plant**

Location: **West Point, New York** Contacts: **Don Michaud/Bob Kronk**

1. Electric Utility: **Orange and Rockland** Rate Schedule: **Contract**
   Contact: **Tom Murray**

2. Gas Utility: **Central Hudson Gas & Electric** Rate Schedule: **Contract**
   Contact: **Steve Burger**

3. Available Fuels: **Natural Gas/ Fuel Oil #5** Capacity Rate:

4. Hours of Use and Percent Occupied:
   51 weeks/year (1 week shutdown)

Weekdays	5	Hrs.	24
Saturday	1	Hrs.	24
Sunday	1	Hrs.	24

5. Outdoor Temperature Range:
   0 to 90°F throughout year

6. Environmental Issues: **Will require State air permit. No problems expected.**

7. Backup Power Need/Requirement: **Power plant has 4,250 kW of generation capacity (2 x 1,250 kW; 1 x 1,750 kW)**

8. Utility Interconnect/Power Quality Issues: **None**

9. On-site Personnel Capabilities: **Equitable Gas will provide maintenance. Plant personnel at site.**

10. Access for Fuel Cell Installation: **Transport truck and crane must fit through 12 ft. wide passage.**

11. Daily Load Profile Availability: **Daily and monthly records of make-up water consumption only.**

12. Security: **Safety posts will have to be installed in lieu of fence. Posts should be removable.**

Site Layout

Facility Type: **Power Plant**

Age: **about 100 Years**

Construction: **Concrete/stone**

Square Feet: **about 20,000 sq ft footprint**

See Figure 1

Electrical System

Service Rating: **Two 34.5 kV to 4.16 kV transformers each rated at 2,800 kVA @ 55 °F. Multiple 4.16 kV to 480 volt transformers inside power plant.**

Electrically Sensitive Equipment:

Largest Motors (hp, usage):

Grid Independent Operation?: **No.**

Steam/Hot Water System

Description: **Two 200,000 lb/hr E. Keeler Co. boilers derated to 150,000 lb/hr (1967). One 70,000 lb/hr Campella Power boiler (about 1994).**

System Specifications: **100 psi superheated steam. Low pressure steam provided in summer at 12-13 psi.**

Fuel Type: **Natural Gas/Fuel Oil #5**

Max Fuel Rate:

Storage Capacity/Type: **None**

Interface Pipe Size/Description: **4 in.**

End Use Description/Profile: **The power plant provides steam to the entire campus except for the hospital and laundry facility.**

Space Cooling System

Description: **Two absorption chiller systems totaling 700 tons of cooling capacity**

Air Conditioning Configuration:

Type: **Unknown**

Rating:

Make/Model:

Seasonality Profile: **mid-April to mid-October**

Space Heating System

Description: **Heat exchangers on steam system.**

Fuel: **Steam from central plant**

Rating: **super heated steam @ 100 psi**

Water supply Temp:

Water Return Temp: **about 180 °F**

Make/Model:

Thermal Storage (space?): **None**

Seasonality Profile: **mid-October to mid April**

Billing Data Summary

ELECTRICITY 9 10 11 12 13 5 6 7 8

Period	kWh	kW	Cost
1.			
2.			
3.			
4.			
5.			
6.			
7.			
8.			
9.			
10			
11.			
12.			

NATURAL GAS

Period	Consumption	Cost
1.		
2.		
3.		
4.		
5.		
6.		
7.		
8.		
9.		
10		
11.		
12.		

OTHER

Period	Consumption	Cost
1.		
2.		
3.		
4.		
5.		
6.		
7.		
8.		
9.		
10		
11.		
12.		

CERL Distribution

Commander, U.S. Military Academy, West Point
ATTN: DHPW MAEN-U-N (2)

Chief of Engineers
ATTN: CEHEC-IM-LH (2)

Engineer Research and Development Center (Libraries)
ATTN: ERDC, Vicksburg, MS
ATTN: Cold Regions Research, Hanover, NH
ATTN: Topographic Engineering Center, Alexandria, VA

Defense Tech Info Center 22304
ATTN: DTIC-O

8
5/01

REPORT DOCUMENTATION PAGE

Form Approved
OMB No. 0704-0188

Public reporting burden for this collection of information is estimated to average 1 hour per response, including the time for reviewing instructions, searching existing data sources, gathering and maintaining the data needed, and completing and reviewing this collection of information. Send comments regarding this burden estimate or any other aspect of this collection of information, including suggestions for reducing this burden to Department of Defense, Washington Headquarters Services, Directorate for Information Operations and Reports (0704-0188), 1215 Jefferson Davis Highway, Suite 1204, Arlington, VA 22202-4302. Respondents should be aware that notwithstanding any other provision of law, no person shall be subject to any penalty for failing to comply with a collection of information if it does not display a currently valid OMB control number. PLEASE DO NOT RETURN YOUR FORM TO THE ABOVE ADDRESS.

1. REPORT DATE (DD-MM-YYYY)
04-2001

2. REPORT TYPE
Final

3. DATES COVERED (From - To)

4. TITLE AND SUBTITLE
Site Evaluation for Application of Fuel Cell Technology:
U.S. Military Academy, West Point, NY

5a. CONTRACT NUMBER
88-94-D-0020

5b. GRANT NUMBER

5c. PROGRAM ELEMENT NUMBER

6. AUTHOR(S)
Michael J. Binder, Franklin H. Holcomb, and William R. Taylor

5d. PROJECT NUMBER
DACA

5e. TASK NUMBER

5f. WORK UNIT NUMBER

7. PERFORMING ORGANIZATION NAME(S) AND ADDRESS(ES)
U.S. Army Engineer Research and Development Center (ERDC)
Construction Engineering Research Laboratory (CERL)
P.O. Box 9005
Champaign, IL 61826-9005

8. PERFORMING ORGANIZATION REPORT NUMBER
ERDC/CERL TR-01-28

9. SPONSORING / MONITORING AGENCY NAME(S) AND ADDRESS(ES)
U.S. Military Academy
Building 667
West Point, NY 10996

10. SPONSOR/MONITOR'S ACRONYM(S)
DHPW MAEN-U-N

11. SPONSOR/MONITOR'S REPORT NUMBER(S)

12. DISTRIBUTION / AVAILABILITY STATEMENT
Approved for public release; distribution is unlimited.

13. SUPPLEMENTARY NOTES
Copies are available from the National Technical Information Service, 5285 Port Royal Road, Springfield, VA 22161.

14. ABSTRACT

Fuel cells are an environmentally clean, quiet, and a highly efficient method for generating electricity and heat from natural gas and other fuels. Researchers at the U.S. Army Engineer Research and Development Center (ERDC), Construction Engineering Research Laboratory (CERL) have actively participated in the development and application of advanced fuel cell technology since fiscal year 1993 (FY93). They have selected and evaluated application sites, supervised the design and installation of fuel cells, actively monitored the operation and maintenance of fuel cells, and compiled "lessons learned" for feedback to the manufacturer for commercially available fuel cell power plants installed at Department of Defense (DOD) locations.

This report presents an overview of the information collected at U.S. Military Academy, West Point, NY, along with a conceptual fuel cell installation layout and description of potential benefits the technology can provide at that location. Similar summaries of the site evaluation surveys for the remaining sites where CERL has managed and continues to monitor fuel cell installation and operation are available in the companion volumes to this report.

15. SUBJECT TERMS
fuel cells
energy conservation
fuel technology alternatives
U.S. Military Academy, West Point, NY

16. SECURITY CLASSIFICATION OF:			17. LIMITATION OF ABSTRACT	18. NUMBER OF PAGES	19a. NAME OF RESPONSIBLE PERSON
a. REPORT	b. ABSTRACT	c. THIS PAGE			Michael J. Binder
Unclassified	Unclassified	Unclassified	SAR	28	19b. TELEPHONE NUMBER (include area code) (217) 373-7214