ERDC/CERL TR-01-31

Construction Engineering Research Laboratory

US Army Corps of Engineers®
Engineer Research and Development Center

Site Evaluation for Application of Fuel Cell Technology

Nellis Air Force Base, NV

Michael J. Binder, Franklin H. Holcomb, and William R. Taylor

March 2001

20010502 060

pproved for public release; distribution is unlimited.

ERDC/CERL TR-01-31

Construction Engineering Research Laboratory

US Army Corps of Engineers®
Engineer Research and Development Center

Site Evaluation for Application of Fuel Cell Technology

Nellis Air Force Base, NV

Michael J. Binder, Franklin H. Holcomb, and William R. Taylor

March 2001

proved for public release; distribution is unlimited.

Foreword

In fiscal years 93 and 94, Congress provided funds for natural gas utilization equipment, part of which was specifically designated for procurement of natural gas fuel cells for power generation at military installations. The purchase, installation, and ongoing monitoring of 30 fuel cells provided by these appropriations has come to be known as the "DoD Fuel Cell Demonstration Program." Additional funding was provided by: the Office of the Deputy Under Secretary of Defense for Industrial Affairs & Installations, ODUSD (IA&I)/HE&E; the Strategic Environmental Research & Development Program (SERDP); the Assistant Chief of Staff for Installation Management (ACSIM); the U.S. Army Center for Public Works (CPW); the Naval Facilities Engineering Service Center (NFESC); and Headquarters (HQ), Air Force Civil Engineer Support Agency (AFCESA).

This report documents work done at Nellis Air Force Base (AFB), Las Vegas, NV. Special thanks is owed to the Nellis AFB points of contact (POCs), Gene Rogers and Frank Dunks, for providing investigators with access to needed information for this work. The work was performed by the Energy Branch (CF-E), of the Facilities Division (CF), Construction Engineering Research Laboratory (CERL). The CERL Principal Investigator was Michael J. Binder. Part of this work was performed by Science Applications International Corp. (SAIC), under Contract DACA88-94-D-0020, task orders 0002, 0006, 0007, 0010, and 0012. The technical editor was William J. Wolfe, Information Technology Laboratory. Larry M. Windingland is Chief, CEERD-CF-E, and L. Michael Golish is Chief, CEERD-CF. The associated Technical Director was Gary W. Schanche. The Acting Director of CERL is William D. Goran.

CERL is an element of the U.S. Army Engineer Research and Development Center (ERDC), U.S. Army Corps of Engineers. The Director of ERDC is Dr. James R. Houston and the Commander is COL James S. Weller.

DISCLAIMER

The contents of this report are not to be used for advertising, publication, or promotional purposes. Citation of trade names does not constitute an official endorsement or approval of the use of such commercial products. All product names and trademarks cited are the property of their respective owners.

The findings of this report are not to be construed as an official Department of the Army position unless so designated by other authorized documents.

DESTROY THIS REPORT WHEN IT IS NO LONGER NEEDED. DO NOT RETURN IT TO THE ORIGINATOR.

Contents

Foreword 2

List of Figures and Tables 4

1 Introduction 5

Background 5
Objective 6
Approach 6
Units of Weight and Measure 7

2 Site Description 8

Site Layout 9
Electrical System 10
Steam/Hot Water System 10
Space Heating System 10
Space Cooling System 10
Fuel Cell Location 10
Fuel Cell Interfaces 11

3 Economic Analysis 15

4 Conclusions and Recommendations 19

Appendix: Fuel Cell Site Evaluation Form 20

CERL Distribution 27

Report Documentation Page 28

List of Figures and Tables

Figures

1 Nine-building dormitory complex 8
2 Central plant layout, Nellis AFB, Bldg. 791 9
3 Central plant layout and fuel cell location, Nellis AFB, Bldg. 791 11
4 Thermal interface — DHW and Laundry....12
5 Thermal interface — DHW, Laundry, and space heating 14

Tables

1 Companion ERDC/CERL site evaluation reports 7
2 Nellis Air Force Base electricity consumption....15
3 Nellis Air Force Base natural gas consumption 16
4 Nevada Power Company – large general service rate (transmission) 17
5 Economic Savings of Fuel Cell Design Alternatives (Nellis AFB)....18

1 Introduction

Background

Fuel cells generate electricity through an electrochemical process that combines hydrogen and oxygen to generate direct current (DC) electricity. Fuel cells are an environmentally clean, quiet, and a highly efficient method for generating electricity and heat from natural gas and other fuels. Air emissions from fuel cells are so low that several Air Quality Management Districts in the United States have exempted fuel cells from requiring operating permits. Today's natural gas-fueled fuel cell power plants operate at electrical conversion efficiencies of 40 to 50 percent; these efficiencies are predicted to climb to 50 to 60 percent in the near future. In fact, if the heat from the fuel cell process is used in a cogeneration system, efficiencies can exceed 85 percent. By comparison, current conventional coal-based technologies operate at efficiencies of 33 to 35 percent.

Phosphoric Acid Fuel Cells (PAFCs) are in the initial stages of commercialization. While PAFCs are not now economically competitive with other more conventional energy production technologies, current cost projections predict that PAFC systems will become economically competitive within the next few years as market demand increases.

Fuel cell technology has been found suitable for a growing number of applications. The National Aeronautics and Space Administration (NASA) has used fuel cells for many years as the primary power source for space missions and currently uses fuel cells in the Space Shuttle program. Private corporations have recently been working on various approaches for developing fuel cells for stationary applications in the utility, industrial, and commercial markets. Researchers at U.S. Army Engineer Research and Development Center (ERDC), Construction Engineering Research Laboratory (CERL) have actively participated in the development and application of advanced fuel cell technology since fiscal year 1993 (FY93). CERL has successfully executed several research and demonstration work units with a total funding of approximately $55M.

As of November 1997, 30 commercially available fuel cell power plants and their thermal interfaces have been installed at DoD locations, CERL managed 29 of these installations. As a consequence, the Department of Defense (DoD) is the

owner of the largest fleet of fuel cells worldwide. CERL researchers have developed a methodology for selecting and evaluating application sites, have supervised the design and installation of fuel cells, and have actively monitored the operation and maintenance of fuel cells, and compiled "lessons learned" for feedback to manufacturers. This accumulated expertise and experience has enabled CERL to lead in the advancement of fuel cell technology through major efforts such as the DoD Fuel Cell Demonstration Program, the Climate Change Fuel Cell Program, research and development efforts aimed at fuel cell product improvement and cost reduction, and conferences and symposiums dedicated to the advancement of fuel cell technology and commercialization.

This report presents an overview of the information collected at Nellis Air Force Base (AFB), Las Vegas, NV along with a conceptual fuel cell installation layout and description of potential benefits the technology can provide at that location. Similar summaries of the site evaluation surveys for the remaining 28 sites where CERL has managed and continues to monitor fuel cell installation and operation are available in the companion volumes to this report (see Table 1).

Objective

The objective of this work was to evaluate Nellis AFB as a potential location for a fuel cell application.

Approach

On 28 and 29 September 1994, Science Applications International Corporation (SAIC) visited Nellis Air Force Base (the site) to investigate it as a potential location for a 200 kW phosphoric acid fuel cell. This report presents an overview of information collected at the site along with a conceptual fuel cell installation layout and description of potential benefits. The Appendix to this report contains a copy of the site evaluation form filled out at the site.

Table 1. Companion ERDC/CERL site evaluation reports.

Location	Report No.
Fort Bliss, TX	TR 01-13
Fort Eustis, VA	TR 00-17
Fort Huachuca, AZ	TR 00-14
Fort Richardson, AK	TR 00-Draft
Picatinny Arsenal, NJ	TR 00-24
Pine Bluff Arsenal, AR	TR 01-15
U.S. Army Soldier Systems Center, Natick, MA	TR 00-Draft
U.S. Military Academy, West Point, NY	TR 00-Draft
Watervliet Arsenal, Albany, NY	TR 00-Draft
911th Airlift Wing, Pittsburgh, PA	TR 00-18
934th Airlift Wing, Minneapolis, MN	TR 00-19
Barksdale Air Force Base (AFB), LA	TR 01-29
Davis-Monthan AFB, AZ	TR 00-23
Edwards AFB, CA	TR 00-Draft
Kirtland AFB, NM	TR 00-Draft
Laughlin AFB, TX	TR 00-Draft
Little Rock AFB, AR	TR 00-Draft
Nellis AFB, NV	TR 01-31
Westover Air Reserve Base (ARB), MA	TR 00-20
Construction Battalion Center (CBC), Port Hueneme, CA	TR 00-16
Naval Air Station Fallon, NV	TR 00-15
Naval Education Training Center, Newport, RI	TR 00-21
Naval Hospital, Marine Corps Base Camp Pendleton, CA	TR 00-Draft
Naval Hospital, Naval Air Station Jacksonville, FL	TR 01-30
Naval Oceanographic Office, John C. Stennis Space Center, MS	TR 01-3
Subase New London, Groton, CT	TR 00-Draft
U.S. Naval Academy, Annapolis, MD	TR 00-22
National Defense Center for Environmental Excellence (NDCEE), Johnstown, PA	TR 01-33
Naval Hospital, Marine Corps Air Ground Combat Center (MCAGCC), Twentynine Palms, CA	TR 01-32

Units of Weight and Measure

U.S. standard units of measure are used throughout this report. A table of conversion factors for Standard International (SI) units is provided below.

1 ft	=	0.305 m
1 mile	=	1.61 km
1 acre	=	0.405 ha
1 gal	=	3.78 L
°F	=	°C (X 1.8) + 32

2 Site Description

Nellis AFB is located in Las Vegas, Nevada. The Site is an air training facility and is also home to the Air Force Thunderbirds. Temperatures range from the teens to over 100 °F.

A central plant building supplying domestic hot water for 288 dorm rooms and four laundry facilities was selected as the best application for the fuel cell by Site personnel. The complex consists of nine buildings; four dorm buildings, four central dorm halls/laundry facilities and the central plant (Figure 1). There is also a dining facility nearby. The complex is approximately 5 years old. The central plant consists of two boilers, a 3200-gal storage tank, pumps, heat exchangers, electric panels/transformers and a cooling tower.

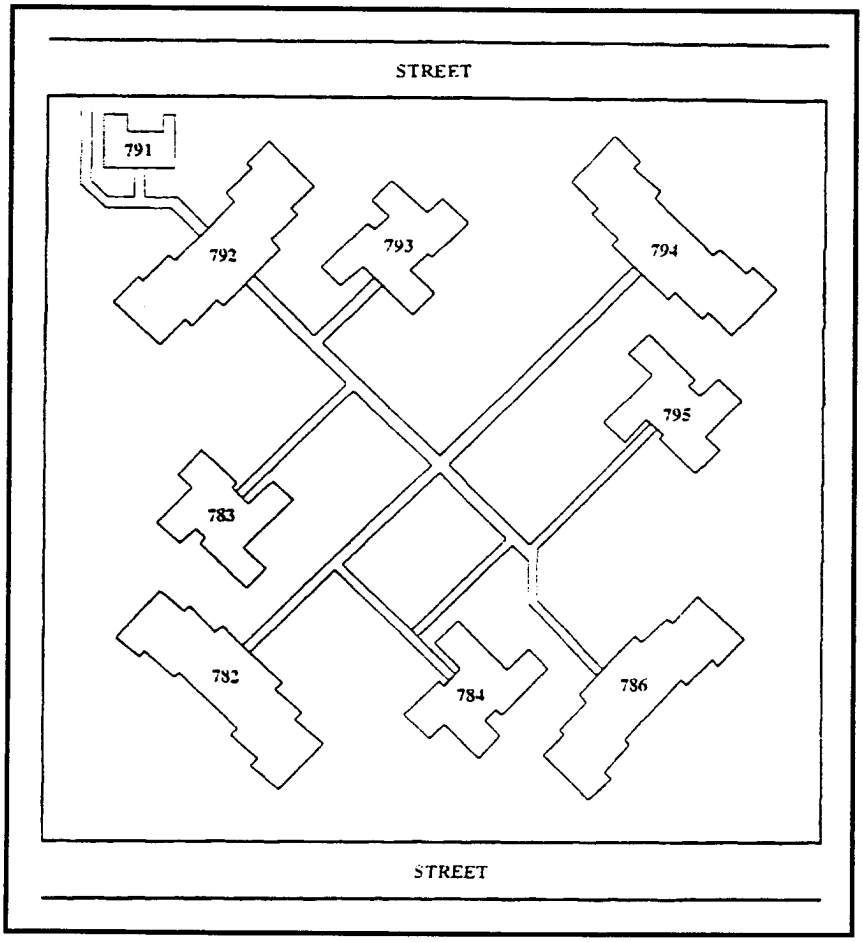

Figure 1. Nine-building dormitory complex.

There is also a water loop throughout the facility for water source heat pumps. The heating season at Nellis AFB is usually October through March. Heating is required nearly constantly for about 3 of the 6 heating months. The other 3 months require intermittent heating. It was assumed that heating is required for an equivalent of 3 full months in a year. The plant is not metered for either gas or electricity. Estimates of energy consumption were made based on dorm occupancy and estimated hours of laundry facility usage. The central facility is estimated to have an electric load of less than 100 kW. The thermal load will be discussed in the Steam/Hot Water System section.

Site Layout

Figure 2 shows the central plant facility site layout. The facility consists of a building and a small outdoor yard enclosed by a block wall. The yard consists of an electrical transformer and a cooling tower. The building is divided into three main rooms; electrical room, pump room, and boiler room. The electrical room has electrical panels and a small transformer; the pump room has a 3200-gal storage tank, water softeners, pumps, and a heat exchanger, and the boiler room has two Kewanee boilers.

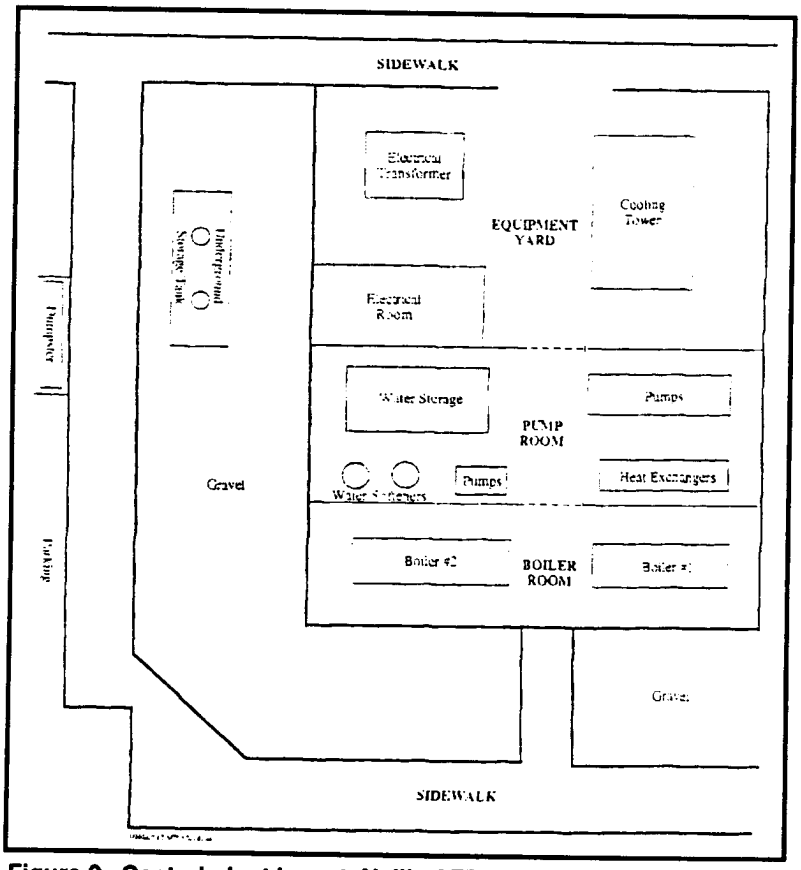

Figure 2. Central plant layout, Nellis AFB, Bldg. 791.

Electrical System

The central plant is supplied by a 12,470/480 volt transformer (1,000 kVA), located on the north side of the building in the equipment yard. The electrical switch gear is located in a small room that contains 400-800 amp electrical panels. There is also a small 480/120-208 volt transformer located in this room.

Steam/Hot Water System

The central plant has two 2.05 MBtu/hr Kewanee Boiler Corp. boilers. The boilers operate on natural gas. City water is fed into two water softeners before entering the boilers. Output from the boiler is about 170 °F and is sent to a storage tank. There are two main hot water loops throughout the complex; for domestic hot water and for heating/cooling water source heat pumps. The domestic hot water loop includes a continuous recirculation loop that supplies hot water for showers, sinks, and laundry at an outlet temperature of 120 °F.

Space Heating System

The water source heat pump recirculation pump is maintained at 60 to 85 °F for heating and cooling. There are 288 heat pumps for the dorms and a few additional units for the central locations.

Space Cooling System

Cooling is supplied by the water source heat pumps.

Fuel Cell Location

The proposed location for the fuel cell is the west side of the central plant building. There is a 20-ft-wide gravel area next to the building that can be utilized. An 8-ft wide sidewalk will have to be used for some of the clearance requirement around the fuel cell. Figure 3 shows the location of the proposed fuel cell site along with proposed thermal and electric runs. The thermal piping run will be approximately 30 ft into the building. The electric connection at the present site of the transformer will be approximately 50 ft from the fuel cell. The natural gas line to the boilers will be extended out to the fuel cell (about 35 ft).

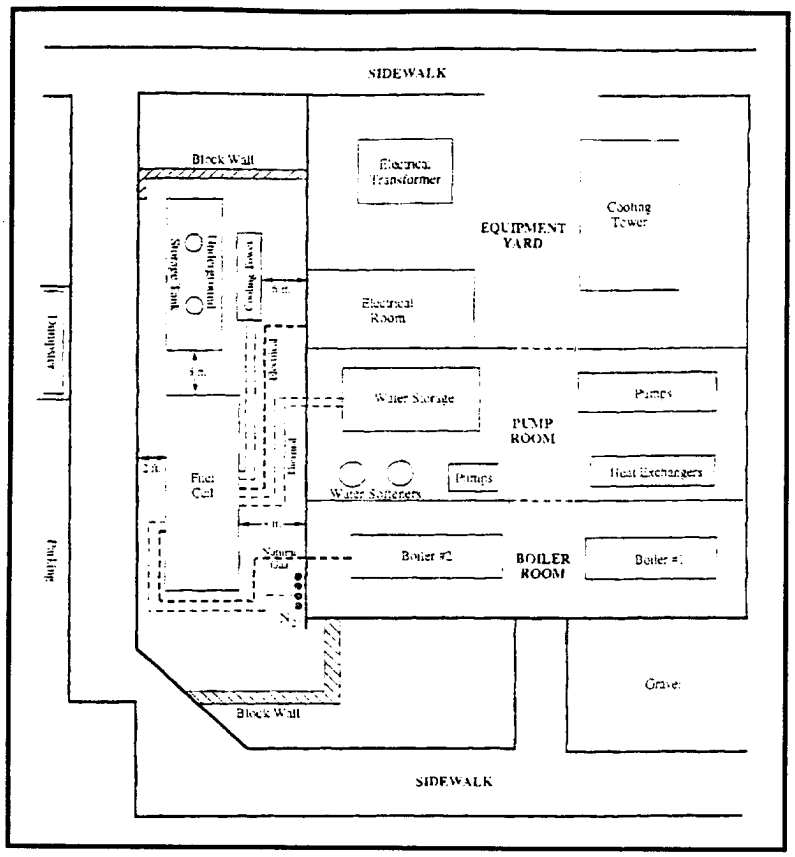

Figure 3. Central plant layout and fuel cell location, Nellis AFB, Bldg. 791.

Fuel Cell Interfaces

It is recommended that the fuel cell be electrically connected to a main breaker panel located in the electrical room adjacent to the mechanical room in Building 791. The breaker panel is rated at 480 volts and 800 amps. The breaker panel is fed by a 12.4 kV/480 volt, 1,000 kVA transformer. The breaker panel feeds one 72 room dormitory.

Three thermal interfaces were examined. These are: (1) domestic hot water (DHW) make-up and recirculation losses, (2) water loop for the water source heat pumps during heating, and (3) hot water for the dining hall.

1. *DHW Make-up and Recirculation Losses*

A single loop provides DHW for the four dormitories and day rooms. Make-up water is heated to 120 °F in a 3,200-gal storage tank. The proposed fuel cell interface is to direct the make-up water through the fuel cell and return the heated water into the recirculation return line as shown in Figure 4. A circulating pump should be installed to control the flow to the fuel cell and to recirculate water from the storage tank during periods of low or no make-up flow. A high temperature shut-off should be installed on the pump to prevent overheating of the tank. A higher tank temperature will result in more Btu's being stored. For maximum tank temperatures above 120 °F, a mixing valve must be installed on the DHW supply line to maintain the maximum safe temperature for the DHW (typically 140 °F).

The DHW make-up load was calculated as follows:

- 288 rooms at 95 percent occupancy
- 12 gal/person/day (ASHRAE)
- Heating 55 °F city water to 120 °F

DHW Load = (288)(95%)(12 gal/day)(8.35lb/gal)(120-55 °F)/24hr/day= 74 kBtu/hr

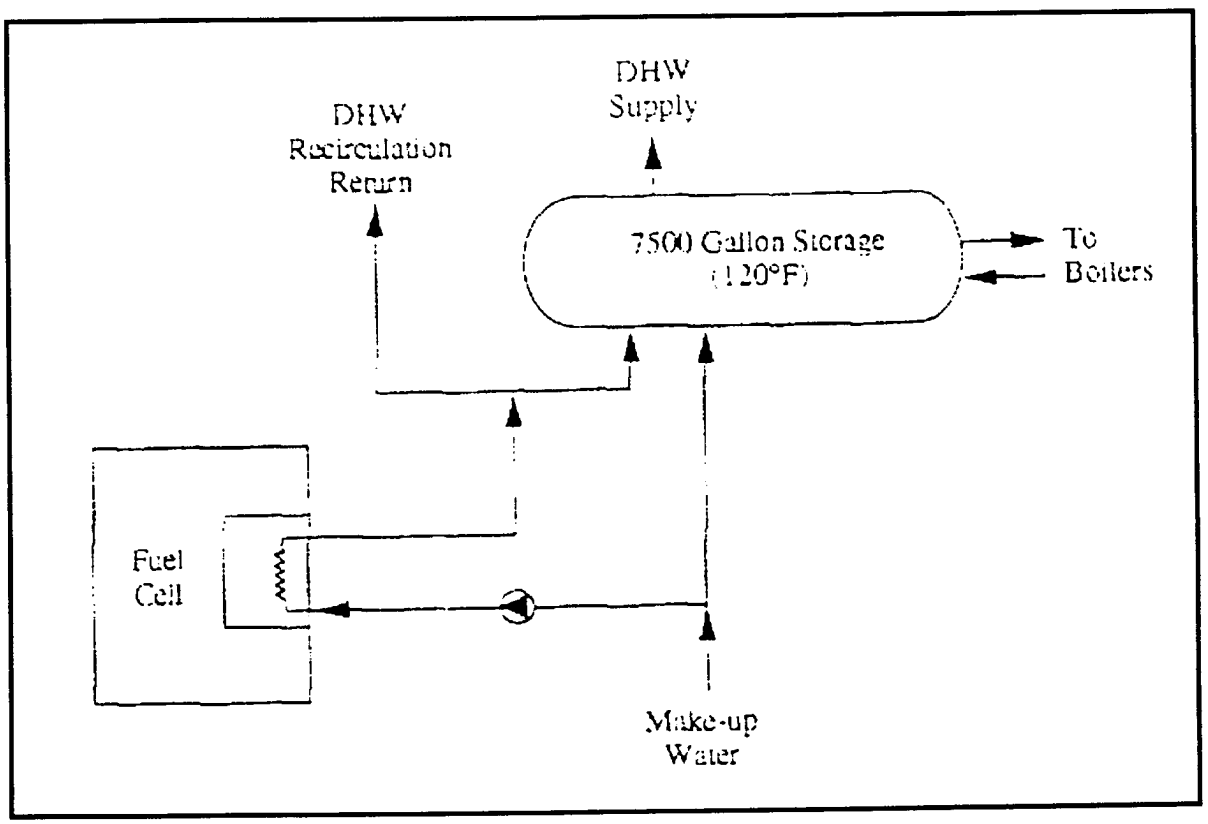

Figure 4. Thermal interface — DHW and Laundry.

The DHW is also used for the clothes washers in the four day room buildings. Each day room contains eight washers. It was estimated by the dormitory supervisor that 75 percent of the washers were in use 5 hr/day. The DHW load for laundry use was calculated as follows:

- 32 washers (75 percent usage for 5 hr/day)
- 20 gal/hr/washer (ASHRAE)

Laundry Load = 32(75%)(20 gal/hr)(8.35 lb/gal)(120-55 °F)(5 hr)/24 hr/day = 54 kBtu/hr

The recirculation losses were estimated to be 10 percent of the DHW.

Recirculation Load = (74 + 54 kBtu/hr)(10%) = 13 kBtu/hr

For this interface, it is estimated that the fuel cell thermal utilization would be about 20 percent [(74+54+13 kBtu/hr) / (700kBtu/hr)].

2. *Water Loop for the Water Source Heat Pumps*

The water loop for the water source heat pumps is maintained between 60-85 °F during the heating season. A heat exchanger is used to maintain this range. When the heat exchanger is operating, the temperature differential across the heat exchanger ranges from very small to about 4 °F. The flow rate in this loop was estimated at 950 gpm.

The heat load for maintaining the temperature in this loop was calculated as follows:

- 950 gpm (two 475 gpm pumps)
- 2 °F delta T average
- heating 3 equivalent full months/year

Space Heat Load = (950 gpm)(60min/hr)(8.35lb/gal)(2 °F) = 952 kBtu/hr

To interface with the heat pump water loop, an additional double walled heat exchanger and pump would be required as shown in Figure 5.

The fuel cell thermal utilization for the DHW plus space heating loads is estimated to be:

40% [(141 kBtu/hr(9/12) + 700 kBtu/hr(3/12)) / (700 kBtu/hr)].

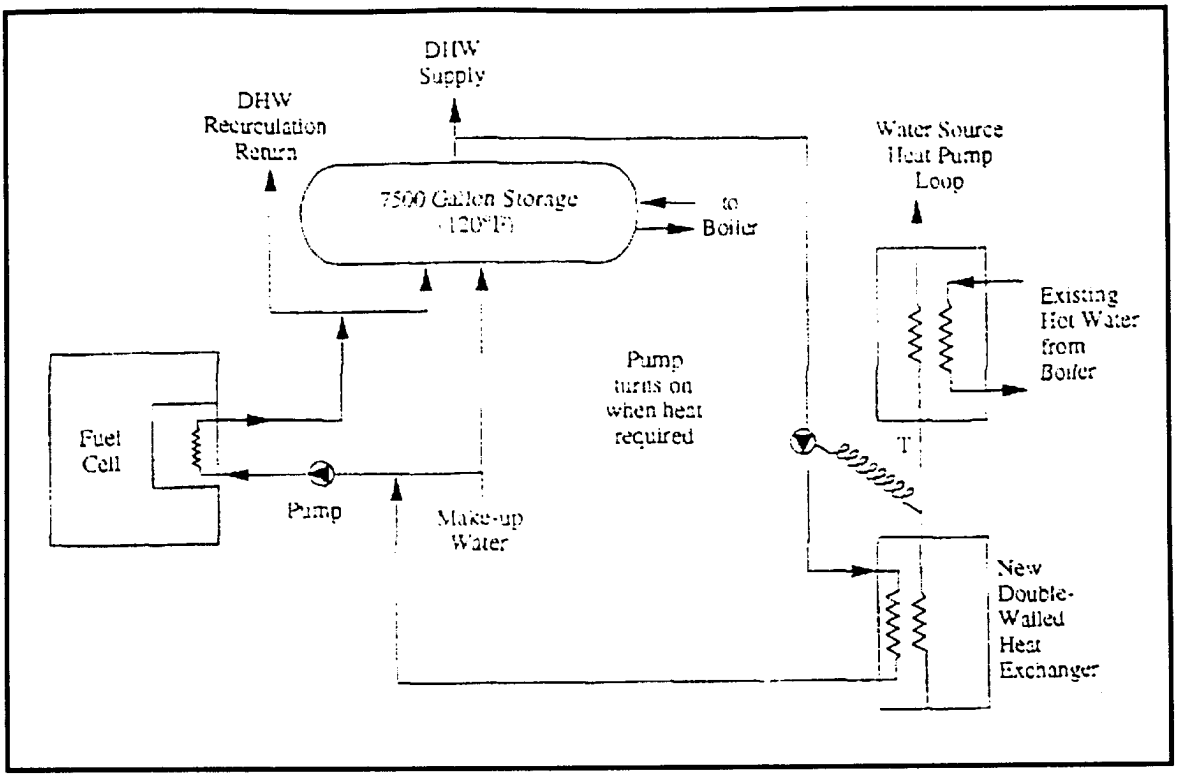

Figure 5. Thermal interface — DHW, Laundry, and space heating.

3. *Hot Water for Dining Hall*

The dining hall typically serves 300-500 meals per day. Using an ASHRAE estimate of 2.4 gal per meal, the kitchen hot water load was calculated as follows:

Kitchen Load = (400 meals/day)(2.4 gal/meal)(8.35 lb/gal)(180-55 °F)/24 hr = 42 kBtu/hr

The dining hall, however, is approximately 100 yards from Building 791 across a parking lot. The fuel cell site next to Building 791 is a better location, having more space and better thermal loads. The dining hall, therefore, was rejected as a potential thermal application.

3 Economic Analysis

Nellis AFB is located in Nevada Power Company's service territory. Electric bills were obtained for July 1992 through June 1993 (Table 2). The average rate ranged from 3.82 cents/kWh in March to 7.34 cents/kWh in September. The average electric rate paid by the Site in 1993 was 5.3 cents/kWh. The site is billed under rate schedule LGS (Transmission), which is a time-of-use rate. The on-peak period is between 1:00 p.m. and 7:00 p.m. Monday through Friday during the summer months. The summer period is June through September. The mid-peak period is the 6 hr from 10:00 a.m. to 1:00 p.m. and 7:00 p.m. to 10:00 p.m. in the summer period. The off-peak period is all remaining hours including weekends and holidays throughout the year.

Before October 1st, 1994 the Site purchased gas directly from Southwest Gas Corporation. Table 3 presents the natural gas bills for Nellis AFB from August 1992 to July 1993. As of October 1st, 1994 the Site purchases natural gas on the spot market and pays Southwest Gas Corporation a fee to transport it to Nellis AFB. For purposes of the economic analysis, a spot market gas cost of $1.85/MBtu was assumed based on information from the Site. Southwest gas charges $0.59/MBtu for cogeneration gas (input fuel for fuel cell) and $0.85/MBtu for basic transportation. Input fuel for the fuel cell was assumed to be $2.45/MBtu and 2.70/MBtu for boiler gas.

Table 2. Nellis Air Force Base electricity consumption.

Date	Peak KW	Total KWH	Total Bill	$/KWH
Jul 92	25,538	13,008,851	$900,925	$0.0693
Aug 92	26,422	14,098,765	$985,483	$0.0699
Sep 92	23,007	11,412,760	$837,476	$0.0734
Oct 92	23,084	9,421,982	$478,950	$0.0508
Nov 92	16,306	8,318,635	$336,042	$0.0404
Dec 92	17,030	9,235,666	$373,778	$0.0405
Jan 93	17,208	9,716,763	$394,387	$0.0406
Feb 93	15,759	8,227,019	$334,026	$0.0406
Mar 93	14,372	7,721,469	$294,769	$0.0382
Apr 93	15,880	7,911,817	$305,499	$0.0386
May 93	21,612	9,831,866	$389,543	$0.0396
Jun 93	23,732	10,294,024	$691,430	$0.0672
Total/Avg	19,996	119,199,617	$6,322,308	$0.0530

Table 3. Nellis Air Force Base natural gas consumption.

Date	Therms	Amount	$/MBtu
Aug 92	81,057	$28,257	$3.49
Sep 92	79,023	$27,551	$3.49
Oct 92	92,660	$32,288	$3.48
Nov 92	246,607	$86,420	$3.50
Dec 92	412,133	$143,266	$3.48
Jan 93	393,739	$136,876	$3.48
Feb 93	287,865	$100,098	$3.48
Mar 93	176,589	$60,735	$3.44
Apr 93	110,338	$37,858	$3.43
May 93	89,599	$30,761	$3.43
Jun 93	76,864	$26,405	$3.44
Jul 93	77,848	$26,959	$3.46
Total/Avg	2,124,322	$737,474	$3.47

Table 4 presents the demand and energy electric rates under rate schedule LGS. This table also presents the first year electric savings from a 200 kW fuel cell based on a 90 percent electric capacity factor. It was assumed that the fuel cell outage hours during the on/off-peak periods occurred at the same percentages as shown in Table 4. In other words, outage hours were not weighted more heavily in either the on-peak or off-peak periods, but were proportional to the number of period hours in a year. Total first year electric savings using a 90 percent electricity capacity factor was $76,508, which includes full demand charge savings. This works out to an average displaced electric rate of 4.85 cents/kWh ($14.21/MBtu).

The potential energy savings based on the estimated thermal utilization from the DHW loop (20 percent) and an electric capacity factor of 90 percent were calculated. The potential energy savings by adding the water source heat pump loop were also calculated. Table 5 presents the electric and thermal savings and input natural gas costs for Building 791. For comparison, a 100 percent thermal utilization scenario is presented. The net savings for the 20 percent thermal utilization was $34,289 in the first year. The net savings for the DHW and water source heat pump loop (40 percent thermal utilization) was 38,262. The difference in savings between the two cases is $3,973/year. Since demand savings from the fuel cell depends on it not being shut down during peak periods, a parametric analysis of the impact of only achieving 50 percent demand savings and no demand savings is also presented in Table 5.

Table 4. Nevada Power Company – large general service rate (transmission).

	Summer	Winter	
Demand Charge			
On-Peak ($/kW)	$7.90		
Mid-Peak ($/kW)	$1.31		
Off-Peak ($/kW)		$0.73	
Energy Charge			
On-Peak ($/kWh)	$0.06560		
Mid-Peak ($/kWh)	$0.06291		
Off-Peak ($/kWh)	$0.03777	$0.04106	
Hr/Year			
On-Peak	520		5.9%
Mid-Peak	520		5.9%
Off-Peak	1,880	5,840	88.1%
	2,920	5,840	100.0%
Savings/Year (90% ELF)			
On-Peak Energy	$6,140		$6,140
Mid-Peak Energy	$5,888		$5,888
Off-Peak Energy	$12,781	$43,162	$55,944
	$24,810	$43,162	$67,972
Demand (200 kW)	$7,368	$1,168	$8,536
Total Savings	$32,178	$44,330	$76,508
Average $/kWh:	$0.0485		

The analysis is a general overview of the economics. For the first 5 years, ONSI will be responsible for the fuel cell maintenance. Maintenance costs are not reflected in this analysis, but could represent a significant impact on net energy savings. Since load profile data were not available, energy savings could vary depending on actual electrical and thermal utilization.

Table 5. Economic Savings of Fuel Cell Design Alternatives (Nellis AFB).

Case	ECF	TU	Displaced kWh	Displaced Gas (MBtu)	Electrical Savings	Thermal Savings	Nat. Gas Cost	Net Savings
A - Max. Thermal	90%	100%	1,576,800	7,357	$76,508	$19,864	$46,192	$50,180
A - DHW + Heat Pump Recirc.	90%	40%	1,576,800	2,943	$76,508	$7,946	$46,192	$38,262
A - DHW Only	90%	20%	1,576,800	1,471	$76,508	$3,973	$46,192	$34,289
B - Max. Thermal	90%	100%	1,576,800	7,357	$72,240	$19,864	$46,192	$45,912
B - DHW + Heat Pump Recirc.	90%	40%	1,576,800	2,943	$72,240	$7,946	$46,192	$33,994
B - DHW Only	90%	20%	1,576,800	1,471	$72,240	$3,973	$46,192	$30,021
C - Max. Thermal	90%	100%	1,576,800	7,357	$67,972	$19,864	$46,192	$41,644
C - DHW + Heat Pump Recirc.	90%	40%	1,576,800	2,943	$67,972	$7,946	$46,192	$29,726
C - DHW Only	90%	20%	1,576,800	1,471	$67,972	$3,973	$46,192	$25,753

Assumptions:

Input Natural Gas Rate:	$2.45 /MBtu
Displaced Thermal Gas Rate:	$2.70 /MBtu
Displaced Electricity Rate:	LGS (TRANS.)
Fuel Cell Thermal Output:	700,000 Btu/hr
Fuel Cell Electrical Efficiency:	36%
Seasonal Boiler Efficiency:	75%

CASE A: full fuel cell demand savings

CASE B: 50% of full fuel cell demand savings

CASE C: zero fuel cell demand savings

ECF = Fuel cell electic capacity factor

TU = Thermal utilization

4 Conclusions and Recommendations

This evaluation concludes that the central plant (Building 791) for the nine-building dormitory complex represents the best application identified at Nellis AFB. The thermal utilization of the fuel cell output is estimated to be between 20 and 40 percent. This is lower than is desirable, but the application and technical interfaces are appropriate for a 200 kW fuel cell. The cost of the thermal interface for the water source heat pump loop is $3,000–$4,000, which is about a 1-year payback period. Both thermal loops should be interfaced with the fuel cell.

The gravel area next to the building is a good location for the fuel cell. Thermal and electrical interface distances are short and can be made directly through the wall. The natural gas line will be the longest pipe run deriving from the opposite side of the building.

Appendix: Fuel Cell Site Evaluation Form

Site Name: **Nellis Air Force Base**
Location: **Las Vegas, NV**

Contacts: **Gene Rogers**

1. Electric Utility: **Nevada Power**
   Contact: **Jeff Neal**

   Rate Schedule: **LGS (Transmission)**

2. Gas Utility: **Southwest Gas Corp.**
   Contact: **E.J. Hilts**

   Rate Schedule: **SG-5/SG-15**

3. Available Fuels: **Natural Gas/Fuel Oil**

   Capacity Rate:

4. Hours of Use and Percent Occupied:

   Weekdays **5** Hrs **24**
   Saturday **1** Hrs **24**
   Sunday **1** Hrs **24**

5. Outdoor Temperature Range: **20 – 100+ °F**

6. Environmental Issues:

7. Backup Power Need/Requirement: **None at dorm central plant**

8. Utility Interconnect/Power Quality Issues:

9. On-site Personnel Capabilities: **Central plant personnel available on-site. Utility will provide service**

10. Access for Fuel Cell Installation: **Proposed site is right next to road**

11. Daily Load Profile Availability: **No metering/log data available**

12. Security: **A block wall will have to be built by the site; no fence required**

Site Layout

Facility Type: **Central plant for dorm complex**

Age: **about 5 years**

Construction: **Concrete block**

Square Feet: **4,160 sq ft (52 x 80 ft)**

See Figures 1 & 2

Electrical System

Service Rating: **12,470 volts service to building (1000 kVA), 480/277 and 120/208 volt service in building**

Electrically Sensitive Equipment: **None**

Largest Motors (hp, usage):

Grid Independent Operation? **No**

Steam/Hot Water System

Description: **Kewanee Boiler Corporation (two)**

System Specifications: **61.1 h.p.**

Fuel Type: **Natural gas**

Max Fuel Rate: **2.05 MBtu/hr**

Storage Capacity/Type: **7,500 gal**

Interface Pipe Size/Description: **3 in.**

End Use Description/Profile:
Hot water from the boiler is used for domestic hot water for the dorm rooms and laundry as well as a recirculating heat pump water loop.

See Figure 4

Space Cooling System

Description: **Water source heat pumps in dorm rooms**

Air Conditioning Configuration:
Type:
Rating:
Make/Model:

Seasonality Profile: **No data available**

Space Heating System

Description: **Water source heat pump**

Fuel:

Rating:

Water supply Temp:

Water Return Temp:

Make/Model:

Thermal Storage (space?):

Seasonality Profile: **None available.**

Billing Data Summary

ELECTRICITY

	Period	kWh	kW	Cost
1.				
2.				
3.				
4.				
5.				
6.				
7.				
8.				
9.				
10				
11.				
12.				

NATURAL GAS

	Period	Consumption	Cost
1.			
2.			
3.			
4.			
5.			
6.			
7.			
8.			
9.			
10			
11.			
12.			

OTHER

	Period	Consumption	Cost
1.			
2.			
3.			
4.			
5.			
6.			
7.			
8.			
9.			
10			
11.			
12.			

CERL Distribution

Commander, Nellis AFB
ATTN: 99CES/CE2 (2)

Chief of Engineers
ATTN: CEHEC-IM-LH (2)

Engineer Research and Development Center (Libraries)
ATTN: ERDC, Vicksburg, MS
ATTN: Cold Regions Research, Hanover, NH
ATTN: Topographic Engineering Center, Alexandria, VA

Defense Tech Info Center 22304
ATTN: DTIC-O

8
4/01

REPORT DOCUMENTATION PAGE

Form Approved
OMB No. 0704-0188

Public reporting burden for this collection of information is estimated to average 1 hour per response, including the time for reviewing instructions, searching existing data sources, gathering and maintaining the data needed, and completing and reviewing this collection of information. Send comments regarding this burden estimate or any other aspect of this collection of information, including suggestions for reducing this burden to Department of Defense, Washington Headquarters Services, Directorate for Information Operations and Reports (0704-0188), 1215 Jefferson Davis Highway, Suite 1204, Arlington, VA 22202-4302. Respondents should be aware that notwithstanding any other provision of law, no person shall be subject to any penalty for failing to comply with a collection of information if it does not display a currently valid OMB control number. PLEASE DO NOT RETURN YOUR FORM TO THE ABOVE ADDRESS.

1. REPORT DATE (DD-MM-YYYY)
03-2001

2. REPORT TYPE
Final

3. DATES COVERED (From - To)

4. TITLE AND SUBTITLE
Site Evaluation for Application of Fuel Cell Technology:
Nellis Air Force Base, NV

5a. CONTRACT NUMBER
88-94-D-0020

5b. GRANT NUMBER

5c. PROGRAM ELEMENT NUMBER

6. AUTHOR(S)
Michael J. Binder, Franklin H. Holcomb, and William R. Taylor

5d. PROJECT NUMBER
DACA

5e. TASK NUMBER

5f. WORK UNIT NUMBER

7. PERFORMING ORGANIZATION NAME(S) AND ADDRESS(ES)
U.S. Army Engineer Research and Development Center (ERDC)
Construction Engineering Research Laboratory (CERL)
P.O. Box 9005
Champaign, IL 61826-9005

8. PERFORMING ORGANIZATION REPORT NUMBER
ERDC/CERL TR-01-31

9. SPONSORING / MONITORING AGENCY NAME(S) AND ADDRESS(ES)
Nellis Air Force Base
P.O. Box 9005
Nellis AFB, NV 89191

10. SPONSOR/MONITOR'S ACRONYM(S)
99CES/CE2

11. SPONSOR/MONITOR'S REPORT NUMBER(S)

12. DISTRIBUTION / AVAILABILITY STATEMENT
Approved for public release; distribution is unlimited.

13. SUPPLEMENTARY NOTES
Copies are available from the National Technical Information Service, 5285 Port Royal Road, Springfield, VA 22161.

14. ABSTRACT

Fuel cells are an environmentally clean, quiet, and a highly efficient method for generating electricity and heat from natural gas anc other fuels. Researchers at the U.S. Army Engineer Research and Development Center (ERDC), Construction Engineering Researc Laboratory (CERL) have actively participated in the development and application of advanced fuel cell technology since fiscal yea 1993 (FY93). CERL selected and evaluated application sites, supervised the design and installation of fuel cells, actively monitore operation and maintenance of fuel cells, and compiled "lessons learned" for feedback to manufacturers for 29 of 30 commercially available fuel cell power plants and their thermal interfaces installed at Department of Defense (DoD) locations.

This report presents an overview of the information collected at Nellis Air Force Base, NV, along with a conceptual fuel cell insta tion layout and description of potential benefits the technology can provide at that location. Similar summaries of the site evaluati surveys for the remaining 28 sites where CERL has managed and continues to monitor fuel cell installation and operation are ava in the companion volumes to this report.

15. SUBJECT TERMS
energy conservation
fuel cells
energy technology alternatives
Nellis Air Force Base, NV

16. SECURITY CLASSIFICATION OF:			17. LIMITATION OF ABSTRACT	18. NUMBER OF PAGES	19a. NAME OF RESPONSIBLE F
a. REPORT	b. ABSTRACT	c. THIS PAGE			Michael J. Binder
Unclassified	Unclassified	Unclassified	SAR	28	19b. TELEPHONE NUMBER (include area code) (217) 373-7214

Standard Form 298 (Rev. 8
Prescribed by ANSI Std. 239.18