ERDC/CERL TR-01-41

Construction Engineering Research Laboratory

US Army Corps of Engineers®
Engineer Research and Development Center

Site Evaluation for Application of Fuel Cell Technology

Laughlin Air Force Base, TX

Michael J. Binder, Franklin H. Holcomb, and William R. Taylor

April 2001

20010502 064

Approved for public release; distribution is unlimited.

ERDC/CERL TR-01-41

Construction Engineering Research Laboratory

US Army Corps of Engineers®
Engineer Research and Development Center

Site Evaluation for Application of Fuel Cell Technology

Laughlin Air Force Base, TX

Michael J. Binder, Franklin H. Holcomb, and William R. Taylor

April 2001

Approved for public release; distribution is unlimited.

Foreword

In fiscal years 93 and 94, Congress provided funds for natural gas utilization equipment, part of which was specifically designated for procurement of natural gas fuel cells for power generation at military installations. The purchase, installation, and ongoing monitoring of 30 fuel cells provided by these appropriations has come to be known as the "DOD Fuel Cell Demonstration Program." Additional funding was provided by: the Office of the Deputy Under Secretary of Defense for Industrial Affairs & Installations, ODUSD (IA&I)/HE&E; the Strategic Environmental Research & Development Program (SERDP); the Assistant Chief of Staff for Installation Management (ACSIM); the U.S. Army Center for Public Works (CPW); the Naval Facilities Engineering Service Center (NFESC); and Headquarters (HQ), Air Force Civil Engineer Support Agency (AFCESA).

This report documents work done at Laughlin Air Force Base (AFB), Del Rio, TX. Special thanks is owed to the Laughlin AFB point of contact (POC), Larry Eckert, for providing investigators with access to needed information for this work. The work was performed by the Energy Branch (CF-E), of the Facilities Division (CF), Construction Engineering Research Laboratory (CERL). The CERL Principal Investigator was Michael J. Binder. Part of this work was performed by Science Applications International Corp. (SAIC), under Contract DACA88-94-D-0020, task orders 0002, 0006, 0007, 0010, and 0012. The technical editor was William J. Wolfe, Information Technology Laboratory. Larry M. Windingland is Chief, CEERD-CF-E, and L. Michael Golish is Chief, CEERD-CF. The associated Technical Director was Gary W. Schanche. The Acting Director of CERL is William D. Goran.

CERL is an element of the U.S. Army Engineer Research and Development Center (ERDC), U.S. Army Corps of Engineers. The Director of ERDC is Dr. James R. Houston and the Commander is COL James S. Weller.

DISCLAIMER

The contents of this report are not to be used for advertising, publication, or promotional purposes. Citation of trade names does not constitute an official endorsement or approval of the use of such commercial products. All product names and trademarks cited are the property of their respective owners.

The findings of this report are not to be construed as an official Department of the Army position unless so designated by other authorized documents.

DESTROY THIS REPORT WHEN IT IS NO LONGER NEEDED. DO NOT RETURN IT TO THE ORIGINATOR.

Contents

Foreword 2

List of Figures and Tables 4

1 Introduction 5

Background 5
Objective 6
Approach 6
Units of Weight and Measure 7

2 Site Description 8

Site Layout 8
Electrical System 11
Steam/Hot Water System 11
Space Heating System 11
Space Cooling System 11
Fuel Cell Location 11
Fuel Cell Interfaces 13
Economic Analysis 16

3 Conclusions and Recommendations 21

Appendix: Fuel Cell Site Evaluation Form 22

CERL Distribution 28

Report Documentation Page 29

List of Figures and Tables

Figures

1 Laughlin AFB partial site map (Hospital, Bldg. 375) 9
2 Hospital site layout — mechanical room area 10
3 Fuel cell location and site interfaces 12
4 Fuel cell thermal interface — hospital 14

Tables

1 Companion ERDC/CERL site evaluation reports 7
2 Hospital gas consumption 15
3 Laughlin AFB FY95 electricity consumption and costs 17
4 Current Industrial Power 44 rate schedule 17
5 Proposed block rate schedule 17
6 Laughlin AFB FY95 natural gas consumption and costs 18
7 Economic savings of fuel cell installation 20

1 Introduction

Background

Fuel cells generate electricity through an electrochemical process that combines hydrogen and oxygen to generate direct current (DC) electricity. Fuel cells are an environmentally clean, quiet, and a highly efficient method for generating electricity and heat from natural gas and other fuels. Air emissions from fuel cells are so low that several Air Quality Management Districts in the United States have exempted fuel cells from requiring operating permits. Today's natural gas-fueled fuel cell power plants operate at electrical conversion efficiencies of 40 to 50 percent; these efficiencies are predicted to climb to 50 to 60 percent in the near future. In fact, if the heat from the fuel cell process is used in a cogeneration system, efficiencies can exceed 85 percent. By comparison, current conventional coal-based technologies operate at efficiencies of 33 to 35 percent.

Phosphoric Acid Fuel Cells (PAFCs) are in the initial stages of commercialization. While PAFCs are not now economically competitive with other more conventional energy production technologies, current cost projections predict that PAFC systems will become economically competitive within the next few years as market demand increases.

Fuel cell technology has been found suitable for a growing number of applications. The National Aeronautics and Space Administration (NASA) has used fuel cells for many years as the primary power source for space missions and currently uses fuel cells in the Space Shuttle program. Private corporations have recently been working on various approaches for developing fuel cells for stationary applications in the utility, industrial, and commercial markets. Researchers at U.S. Army Engineer Research and Development Center (ERDC), Construction Engineering Research Laboratory (CERL) have actively participated in the development and application of advanced fuel cell technology since fiscal year 1993 (FY93), and have successfully executed several research and demonstration work units with a total funding of approximately $55M.

As of November 1997, 30 commercially available fuel cell power plants and their thermal interfaces have been installed at Department of Defense (DOD) locations, CERL managed 29 of these installations. Consequently, the DOD is the

owner of the largest fleet of fuel cells worldwide. CERL researchers have developed a methodology for selecting and evaluating application sites, have supervised the design and installation of fuel cells, and have actively monitored the operation and maintenance of fuel cells, and compiled "lessons learned" for feedback to manufacturers. This accumulated expertise and experience has enabled CERL to lead in the advancement of fuel cell technology through major efforts such as the DOD Fuel Cell Demonstration Program, the Climate Change Fuel Cell Program, research and development efforts aimed at fuel cell product improvement and cost reduction, and conferences and symposiums dedicated to the advancement of fuel cell technology and commercialization.

This report presents an overview of the information collected at Laughlin Air Force Base (AFB), TX along with a conceptual fuel cell installation layout and description of potential benefits the technology can provide at that location. Similar summaries of the site evaluation surveys for the remaining 28 sites where CERL has managed and continues to monitor fuel cell installation and operation are available in the companion volumes to this report (Table 1).

Objective

The objective of this work was to evaluate Laughlin AFB as a potential location for a fuel cell application.

Approach

On 17 and 18 April 1996, CERL and SAIC representatives visited Laughlin Air Force Base (the site) to investigate it as a potential location for a 200 kW fuel cell. This report presents an overview of information collected at the site along with a conceptual fuel cell installation layout and description of potential benefits. The Appendix to this report contains a copy of the site evaluation form filled out at the site.

Table 1. Companion ERDC/CERL site evaluation reports.

Location	Report No.
Pine Bluff Arsenal, AR	TR 00-15
Naval Oceanographic Office, John C. Stennis Space Center, MS	TR 01-3
Fort Bliss, TX	TR 01-13
Fort Huachuca, AZ	TR 01-14
Naval Air Station Fallon, NV	TR 01-15
Construction Battalion Center (CBC), Port Hueneme, CA	TR 01-16
Fort Eustis, VA	TR 01-17
Watervliet Arsenal, Albany, NY	TR 01-18
911th Airlift Wing, Pittsburgh, PA	TR 01-19
Westover Air Reserve Base (ARB), MA	TR 01-20
Naval Education Training Center, Newport, RI	TR 01-21
U.S. Naval Academy, Annapolis, MD	TR 01-22
Davis-Monthan AFB, AZ	TR 01-23
Picatinny Arsenal, NJ	TR 01-24
U.S. Military Academy, West Point, NY	TR 01-28
Barksdale Air Force Base (AFB), LA	TR 01-29
Naval Hospital, Naval Air Station Jacksonville, FL	TR 01-30
Nellis AFB, NV	TR 01-31
Naval Hospital, Marine Corps Air Ground Combat Center (MCAGCC), Twentynine Palms, CA	TR 01-32
National Defense Center for Environmental Excellence (NDCEE), Johnstown, PA	TR 01-33
934th Airlift Wing, Minneapolis, MN	TR 01-38
Laughlin AFB, TX	TR 01-41
Fort Richardson, AK	TR 01-42
Kirtland AFB, NM	TR 01-43
Subase New London, Groton, CT	TR 01-44
Edwards AFB, CA	TR 01-Draft
Little Rock AFB, AR	TR 01-Draft
Naval Hospital, Marine Corps Base Camp Pendleton, CA	TR 01-Draft
U.S. Army Soldier Systems Center, Natick, MA	TR 01-Draft

Units of Weight and Measure

U.S. standard units of measure are used throughout this report. A table of conversion factors for Standard International (SI) units is provided below.

1 ft	=	0.305 m
1 mile	=	1.61 km
1 acre	=	0.405 ha
1 gal	=	3.78 L
°F	=	°C (X 1.8) + 32

2 Site Description

Laughlin AFB is located near Del Rio, TX, and is home to the 47th Flying Training Wing. The primary mission of Laughlin AFB is the undergraduate training of pilots. Laughlin AFB is also home to various tenant organizations including the Air Force Office of Special Investigation (AFOSI), the Defense Investigative Service (DIS), the Defense Reutilization and Marketing Office (DRMO), and the Area Defense Council (ADC) Detachment QD 30 Area Defense.

The primary focus for the fuel cell site evaluation was the base hospital (Bldg. 375). Other buildings such as an airplane painting facility, dormitory, and a mess hall were reviewed, but it was concluded that the thermal loads were not large enough to justify the installation of a fuel cell.

The hospital is currently a five bed facility, but is downsizing to a same-day surgery and outpatient clinic. The 79,400 sq ft facility houses primary care, pediatrics, OBGYN, acute care, radiology, physical therapy, dental, and other departments. The facility is open around the clock, but is primarily occupied between 0730 and 1630 hours.

The mechanical room houses two steam boilers that are used for space heating and reheating, sterilization, and domestic hot water (DHW). A steam/hot water heat exchanger provides hot water to 74 fan coils throughout the hospital building. The hot water is also sent to two (out of a total of seven) building air handler units (AHUs) to preheat the air going to the distributed fan coils. Two of the AHUs are in the mechanical room, and the remaining five are located throughout the hospital. The air is typically heated to 55 °F at the AHUs. In the summer, extensive use of reheating is used to control humidity. The mechanical room also houses two centrifugal chillers, a condensate tank, electrical switchgear panels, and various pumps.

Site Layout

Figure 1 shows the site layout for much of Laughlin AFB. The hospital is identified as Building 375.

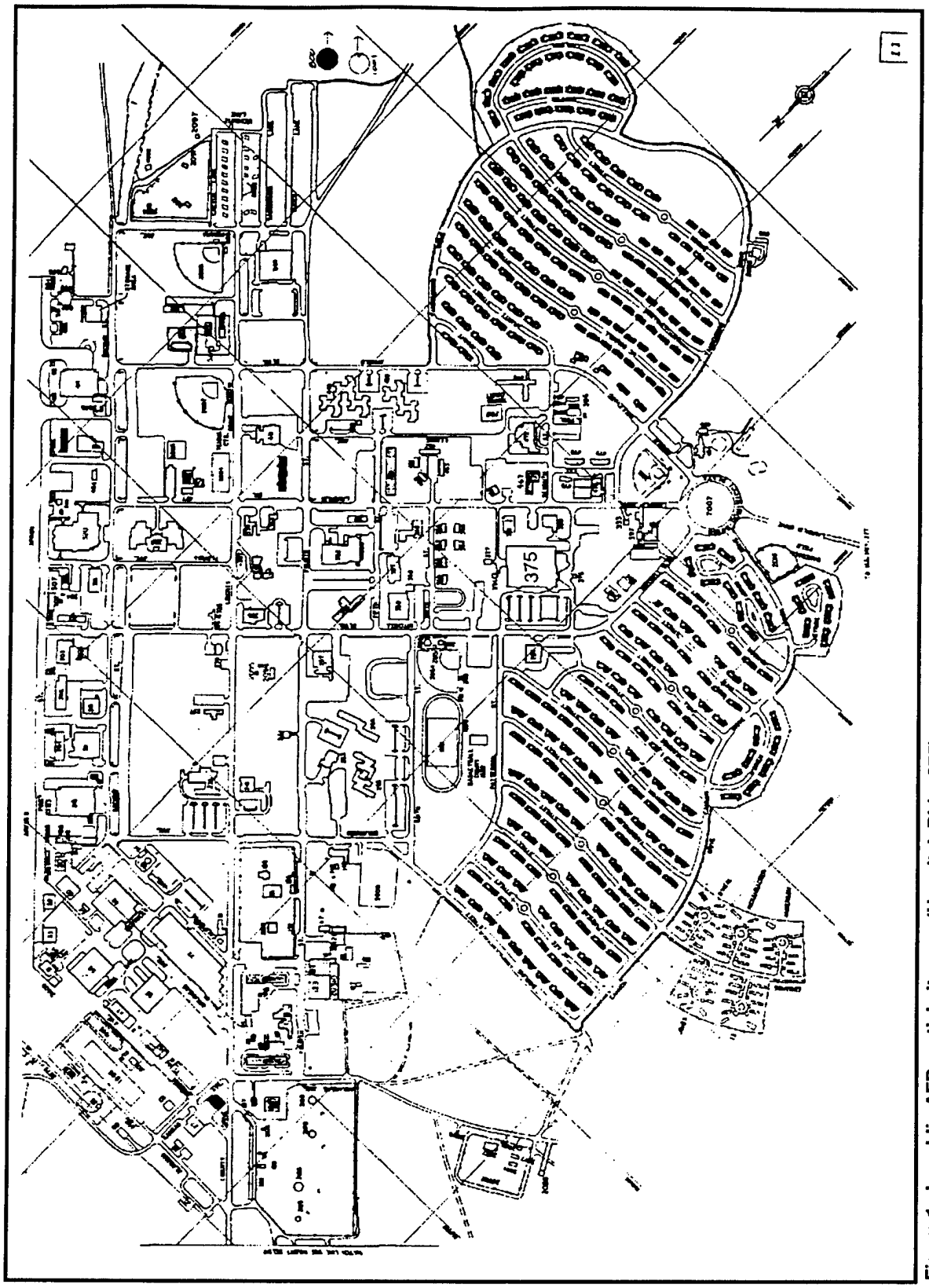

Figure 1. Laughlin AFB partial site map (Hospital, Bldg. 375).

Figure 2 shows a more detailed layout of the hospital facility around the mechanical room, which is located at the southeast corner of the building. Just outside the mechanical room is a walled-in electrical yard that houses a 1200 kVA transformer and two 400 kW emergency generators. The mechanical room houses two new steam boilers, two AHUs, pumps, a 600-gal steam-heated DHW tank, a steam/hot water heat exchanger, a condensate tank, two chillers, and electrical panels.

Just to the east side of the electrical yard is a grassy area that slopes down toward the driveway. A storm drain is approximately 22 ft east of the corner of the electrical yard. There is a fire department "Y" on the south end of the chiller room that requires an 8-ft clearance for fire department personnel access.

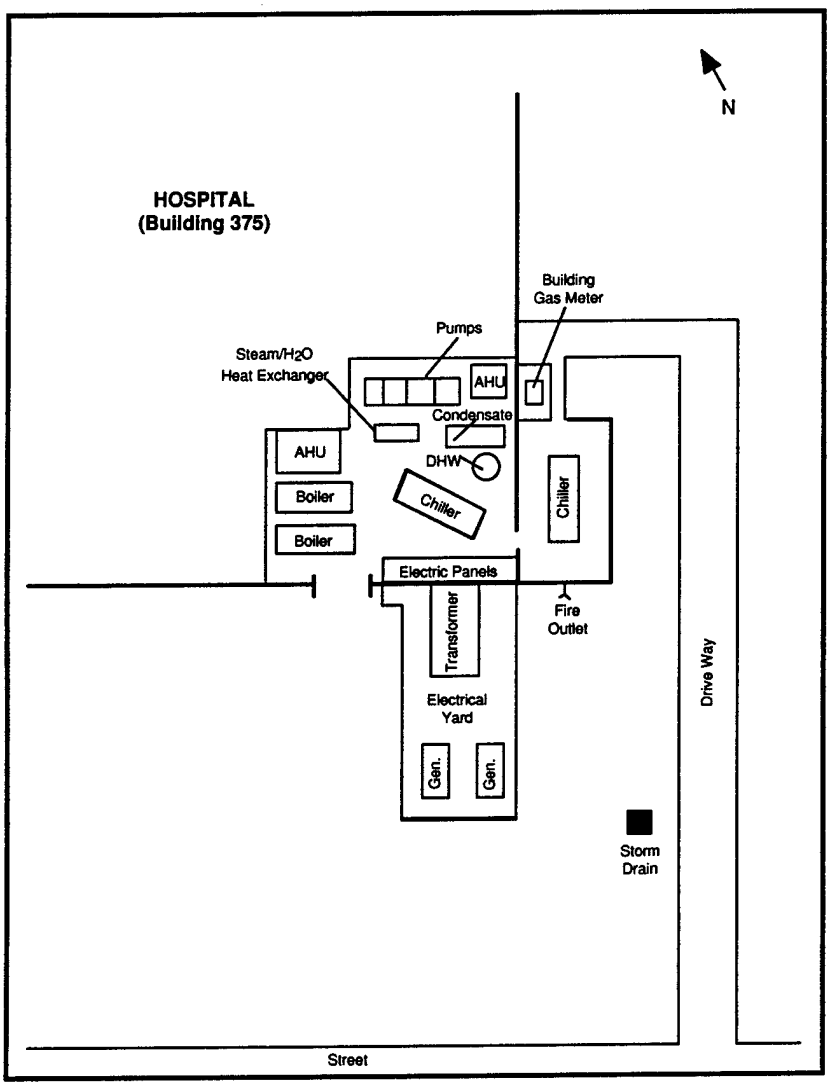

Figure 2. Hospital site layout — mechanical room area.

Electrical System

The base distributes electricity at 12,470 V throughout Laughlin AFB. There is a 480/12,470 V 1200 kVA transformer at the hospital, which is located in the electrical yard.

Steam/Hot Water System

Two Hurst steam boilers, model #54-GP2-200-150, were installed in 1996. The boilers are 70 hp rated at 150 psi maximum. One Hurst boiler was operating during the site visit and putting out about 60 psi steam. The steam heats a PVI Industries 600-gal DHW tank, model # 2500 P 600A-QS. It operates at about 40 psi and heats the tank to about 140 °F.

Space Heating System

Space heating is provided through a steam/hot water heat exchanger located in the mechanical room. The water is heated to between 120 and 160 °F, depending on outside air temperature. The hot water is distributed to two building AHUs for preheating the air before being distributed to the 74 fan coils throughout the building. The hot water distributed to the fan coils heats the air to the desired delivery temperature.

Space Cooling System

The hospital has two 123-ton centrifugal chillers (York model #OT A5 A3-00 CTC and Carrier model #19DG4524AE). The chilled water is distributed throughout the hospital to the fan coils. Both chillers typically operate during the summer, but only one operates during winter months.

Fuel Cell Location

The fuel cell should be located on the east side of the electrical yard wall (Figure 3). The fuel cell should run in a north-south direction with the thermal outlet side facing the driveway to allow easier access for maintenance. Because of the grassy slope and the nearby storm drain, a retaining wall will need to be constructed to support the fuel cell and avoid any runoff into the storm drain.

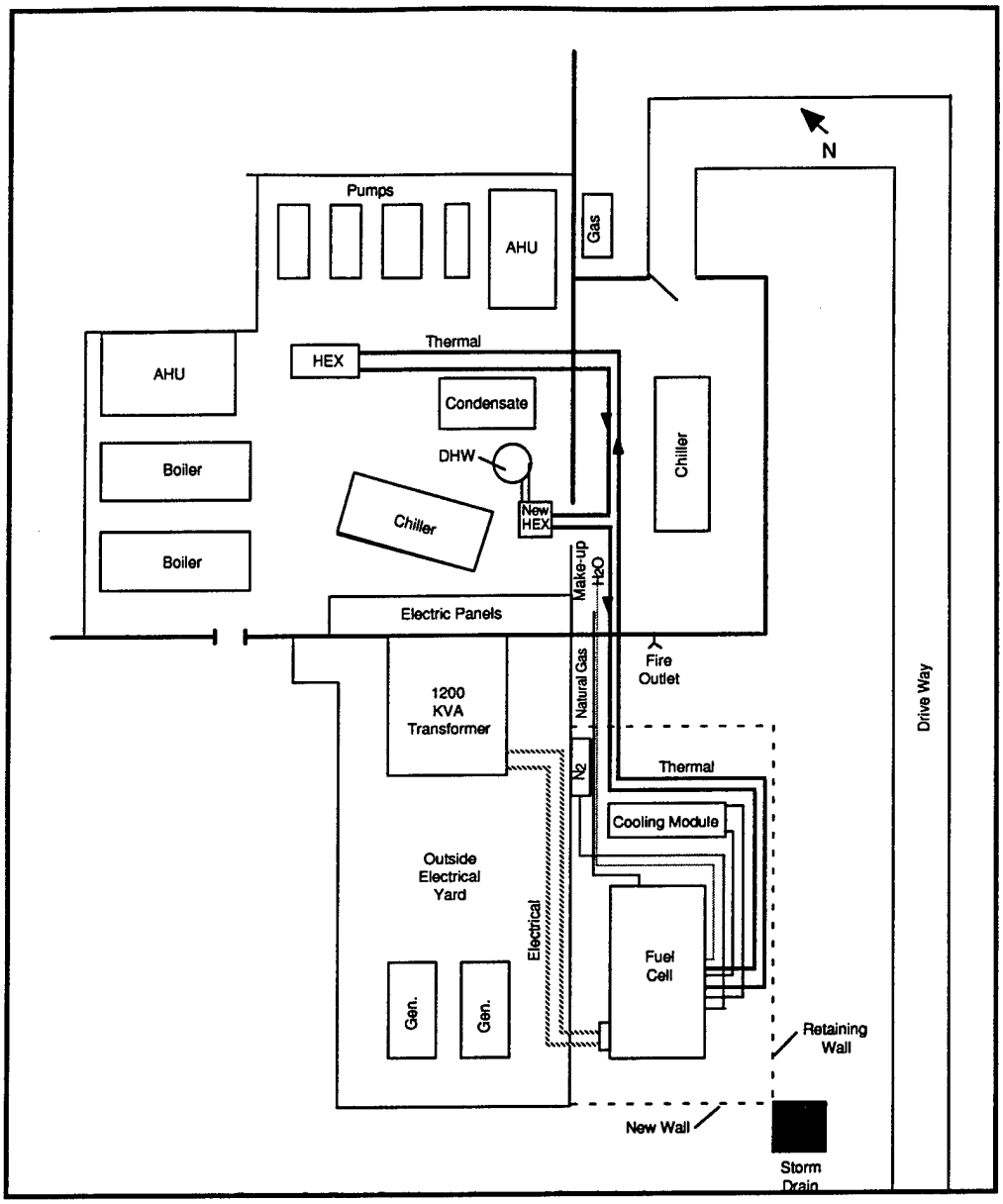

Figure 3. Fuel cell location and site interfaces.

The cooling module can be positioned in an east-west direction and the nitrogen tanks can be positioned against the electrical yard wall as shown. A minimum of 8 ft access space is required for the fire department to tap into the "Y" water distribution plug for the building. Base personnel said that they would prefer to put up a new wall extension, rather than installing the standard chain link fence. The thermal piping from the fuel cell over to the steam/hot water heat exchanger will be approximately 120 ft. Natural gas and make-up water can be taken from inside the mechanical room (about 40-ft runs). The electrical run will be approximately 40 ft over to the electrical transformer tie in. The cooling module piping run will be about 20 ft.

Fuel Cell Interfaces

The hospital uses 480 V electric power fed through a 480 V/12.5 kV, 1200 kVA transformer. The peak electrical demand of the hospital is 552 kW and the average demand is 341 kW. The fuel cell output will be connected to the hospital side of the transformer (480 V). Should the hospital load ever fall below 200 kW, the electric output will feed back through the existing transformer to the base utility grid. After preliminary consideration, the grid-independent option was eliminated from consideration because the hospital is transitioning to an outpatient facility.

The thermal loads of the hospital include space heating, domestic hot water (DHW), air conditioning reheat to control temperature and humidity, and boiler make-up. Space heating is supplied from a steam/hot water heat exchanger where 120 to 160 °F hot water is distributed to individual rooms throughout the hospital. The hot water also preheats the return air to two of the seven AHUs.

The domestic hot water is presently heated by steam in a 600-gal storage tank. Hot water is supplied to the hospital at 140 °F and the cold water make-up is approximately 70 °F. The chillers supply 43 °F chilled water to the air handlers where 55 °F air is supplied to the space. The hospital rooms are maintained at 72 °F and 50 percent relative humidity. The steam boiler make up load was estimated at 50 gal per day, which is very small and not worth tying into the fuel cell output.

The fuel cell will be interfaced with both the steam/hot water heat exchanger loop and the make-up water for the DHW tank. Figure 4 shows how a double wall heat exchanger would be installed between the fuel cell and prior to the reheat coils return line before entering the reheat heat exchanger. A 15 gallon per minute (gpm) pump would draw from the make-up water line to the DHW tank and circulate through the heat exchanger to the top of the storage tank.

A 15 gpm pump was selected because the maximum DHW flow was estimated to be 15 gpm. The pump would be controlled to shut off above 140 °F. The steam input controls should be readjusted so that steam would not be used until the tank temperature dropped below 130 °F, thus ensuring that the fuel cell would not only heat the make-up water, but would also maintain the tank temperature at 140 °F.

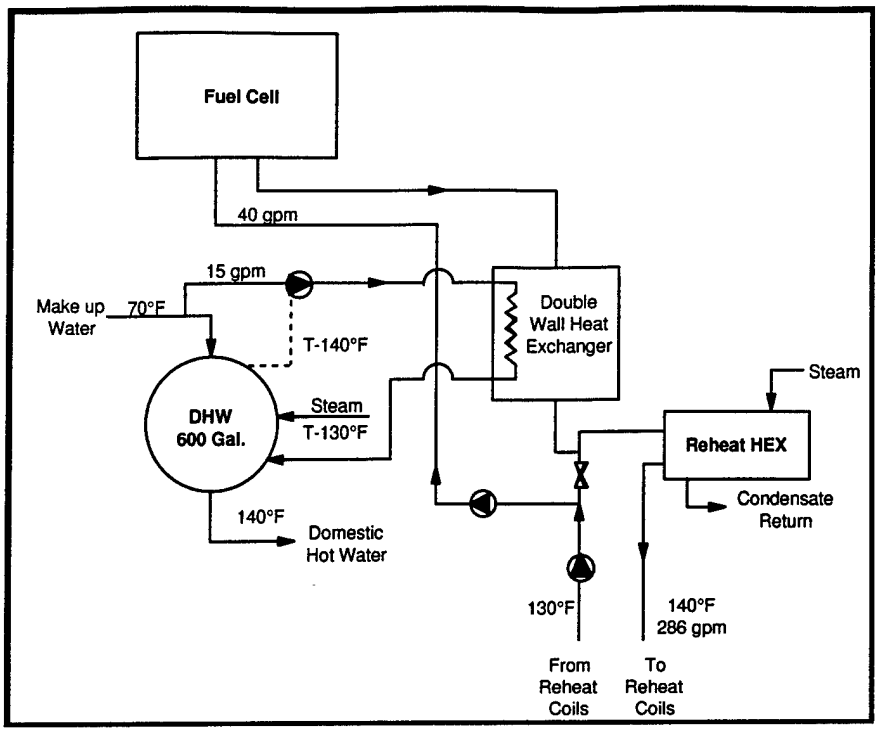

Figure 4. Fuel cell thermal interface — hospital.

If no DHW is being used, the fuel cell will maintain the temperature in the DHW tank. An energy audit was conducted in January 1996, which indicated that approximately 530 MCF/yr (44 MCF/mo) of natural gas was used for DHW in the hospital. It was assumed that the natural gas heating value is 1,000 Btu/cu ft and that the boiler efficiency is 70 percent.

530,000 cu ft/yr x 1,000 Btu/cu ft x 1 yr/8,760 hr x 0.7 eff. = 42,000 Btu/hr

This represents only 6 percent of the fuel cell's thermal output (42 kBtu/hr / 700 kBtu/hr).

The reheat heat exchanger shown in Figure 4 provides hot water for both space heating and reheat at the 74 fan coil units throughout the building. Additionally, the heat exchanger preheats the make-up air in two of the AHUs.

The hot water distribution loop is supplied at 140 °F and the return is approximately 130 °F. The reheat supply temperature does vary between 120 °F and 160 °F and the temperature differential can reach 15 °F. However, site personnel indicated that the supply temperature rarely changes from 140 °F. Table 2 lists the hospital gas consumption, including all gas used at the hospital for the reheat coils, space heating, and DHW. The incinerators are served by another gas meter.

Table 2. Hospital gas consumption.

Month	MCF
Oct-93	638.3
Nov-93	232.5*
Dec-93	1,272.3
Jan-94	907.4
Feb-94	802.7
Mar-94	696.3
Apr-94	763.3
May-94	594.0
Jun-94	558.6
Jul-94	475.0
Aug-94	549.7
Sep-94	447.8

* The November 1993 data provided is not consistent with consumption patterns for other months and was eliminated from the average winter gas consumption calculation.

The average gas consumption for the 5 summer months (May to September) is 525 MCF. The average gas consumption for the 7 winter months (October to April) is 847 MCF. The average summer gas consumption for cooling reheat is determined by subtracting the average monthly DHW gas consumption from the total monthly gas consumption (525 – 44 = 481 MCF). The average hourly reheat load during the summer was estimated as:

481,000 cu ft/mo x 1,000 Btu/cu ft x 1 mo/730 hr x 0.7 eff. = 461 kBtu/hr

The average winter gas consumption for space heating and cooling reheat is determined by subtracting the average monthly DHW gas consumption from the total monthly gas consumption (847 – 44 = 803 MCF). The average hourly load during the winter was estimated as:

803,000 cu ft/mo x 1,000 Btu/cu ft x 1 mo/730 hr x 0.7 eff. = 770 kBtu/hr

With a return temperature of 130 °F, a supply temperature of 155 °F, and a flow rate of 40 gpm, the fuel cell can only produce approximately 500 kBtu/hr. Therefore, the fuel cell will only be able to supply 500 Btu/hr in the winter. The 40 gpm of 155 °F water will mix with the reheat return water at 130 °F and 246 gpm. A 40 gpm pump was selected because the pressure drop through the fuel cell heat exchanger becomes too high at flow rates above 40 gpm. Because the thermal requirement for the DHW system is relatively low, there would only be a

2 °F drop to 153 °F and would not adversely affect the thermal energy supplied to the reheat heat exchanger.

The percentage of fuel cell thermal used by the Hospital's space heating and reheat coil is calculated as:

[(461 kBtu/hr / 700 kBtu/hr) * 5 mo/yr + (500 kBtu/hr / 700 kBtu/hr) * 7 mo/yr] / 12 mo
= 69%

Therefore, 75 percent of the fuel cell's thermal output (69% + 6%) can be utilized by the site, which includes the cooling reheat, winter space heating, and DHW.

Site personnel indicated that the hospital is transitioning to a "super clinic" that will continue to perform procedures, but primarily as an outpatient facility. It is possible that this would have significant impacts on space conditioning or DHW use, but the impact is not known.

Economic Analysis

Laughlin AFB purchases electricity from Central Power & Light under rate schedule Industrial Power 44, which has a demand and energy charge component as well as a fuel adjustment factor that changes periodically. The base receives its electricity at the Primary voltage level. There is a demand ratchet clause where the billed demand will not be less than 80 percent of the highest demand in the previous summer months. In FY95, Laughlin AFB's demand was lower than the 80 percent ratchet level between November 1994 and March 1995 (5 months). Table 3 lists the base electricity consumption and costs for FY95. The average rate paid by the base in FY95 was $0.0583/kWh. Table 4 lists the current Industrial Power 44 rate schedule.

The base expects a new rate schedule to take effect by the end of 1996. Central Power & Light has sent the proposed rate schedule to Laughlin AFB. The proposed rate is a demand and energy block based rate schedule that has three energy blocks: the first 200 kWh/kW; the next 200 kWh/kW; and all kWh/kW over 400. There were 7 months in FY95 where the energy charge never made it to the third tier (>400 kWh/kW). Under this new rate schedule, the fuel cell would be displacing electricity at the 2nd block rate for 7 months/year and at the third block rate for 5 months per year. Table 5 lists the proposed rate.

Table 3. Laughlin AFB FY95 electricity consumption and costs.

Date	Peak KW	Billed KW	KWH	Cost	$/KWH	KWH/KW
Oct-94	7,520	7,285	3,001,160	$189,206	$0.0630	412
Nov-94	6,240	6,643	2,520,840	$166,012	$0.0659	*379*
Dec-94	5,280	6,643	2,506,110	$162,191	$0.0647	*377*
Jan-95	4,720	6,643	2,270,680	$155,404	$0.0684	*342*
Feb-95	4,800	6,643	2,223,000	$154,029	$0.0693	*335*
Mar-95	5,880	6,643	2,629,740	$163,410	$0.0621	*396*
Apr-95	7,160	6,926	2,734,870	$170,179	$0.0622	*395*
May-95	7,680	7,457	3,461,580	$197,398	$0.0570	464
Jun-95	7,720	7,515	2,885,780	$143,811	$0.0498	*384*
Jul-95	8,160	7,918	3,895,630	$200,331	$0.0514	492
Aug-95	8,080	7,805	4,216,750	$206,492	$0.0490	540
Sep-95	7,960	7,672	3,729,680	$193,031	$0.0518	486
Tot/Avg	**6,767**	**7,149**	**36,075,820**	**$2,101,493**	**$0.0583**	**417**

* Italics indicate months where electric consumption did reach the third tier of electric rate schedule.

Table 4. Current Industrial Power 44 rate schedule.

Demand Charge	$13.13/kW
Energy Charge	$0.00779/kWh
Fixed Fuel Factor (Jan.–Jun.)	$0.015429/kWh
Fixed Fuel Factor (Jul.–Dec.)	$0.013702/kWh

Table 5. Proposed block rate schedule.

Demand Charge	
Billed Demand:	$9.38/kW
Energy Charge	
First 200 kWh/kW:	$0.03470/kWh
Next 200 kWh/kW:	$0.01330/kWh
All kWh/kW over 400;	$0.00360/kWh
Fixed Fuel Factor	
All kWh (January–June):	$0.015560/kWh
All kWh (July–December):	$0.014435/kWh

The hospital pays the base at a flat rate of $0.063/kWh for electricity. Depending on how energy savings from the fuel cell are accrued, either the actual base rate schedule or the hospital's flat rate applies for the fuel cell energy savings.

Natural gas is purchased directly from an energy supplier at the spot market rate. Laughlin AFB's current supplier is Valero Industrial LP, Inc. Table 6 lists the base's FY95 natural gas consumption and costs. The average rate was $2.10/MBtu with a high of $2.25/MBtu December 1994) and a low of $1.94/MBtu February 1995). The average rate for the first 6 months of FY96 is $2.55/MBtu.

Table 6. Laughlin AFB FY95 natural gas consumption and costs.

Date	Therms	Cost	$/MBtu
Oct-94	3,726	$7,307	$1.96
Nov-94	6,244	$13,884	$2.22
Dec-94	11,553	$26,045	$2.25
Jan-95	14,954	$32,149	$2.15
Feb-95	10,562	$20,530	$1.94
Mar-95	9,660	$19,080	$1.98
Apr-95	4,228	$8,836	$2.09
May-95	3,945	$8,579	$2.17
Jun-95	3,357	$7,528	$2.24
Jul-95	3,091	$6,334	$2.05
Aug-95	3,363	$6,537	$1.94
Sep-95	3,576	$7,577	$2.12
Tot/Avg	**78,259**	**$164,386**	**$2.10**

Electric savings from the fuel cell were calculated based on the fuel cell operating 90 percent of the year (1,576,800 kWh/yr). Three electric rate scenarios were analyzed: Industrial Power 44 rate, proposed block rate schedule, and the hospital's average cost of electricity.

Savings from the current industrial Power 44 rate were calculated based on a 90 percent fuel cell capacity factor. Demand savings were based on 7 months' demand reduction at 200 kW and 5 months of demand reduction at 80 percent of 200 kW. This assumes that the fuel cell will reduce the summer demand by 200 kW and that 80 percent of this amount can be credited to the fuel cell in the following winter months where the ratchet takes effect. Energy savings from demand, energy, and fuel adjustments were calculated as:

Demand:

[(200 kW * 7 mo) + (200 kW * 5 mo * 80%)] * $13.13/kW = $28,886

Energy:

1,576,800 kWh * $0.00779/kWh = $12,283

Fixed Fuel Factor:

1,576,800 kWh * (6 mo/12 mo) * $0.015560/kWh = $12,268

1,576,800 kWh * (6 mo/12 mo) * $0.014435/kWh = $11,380

Total fuel cell electric savings based on the Industrial Power 44 rate schedule is $64,817.

For the proposed rate, it was assumed that the fuel cell would be displacing electricity at the second block rate for 7 months of the year and the third block for 5 months of the year. Electricity savings using the blocked rate schedule above were calculated as:

Demand Charge:

200 kW * 12 mo/yr * $9.38 = $22,512 (there is no ratchet charge for this rate)

Energy Charge:

1,576,800 kWh * (7 mo/12 mo) * $0.01330/kWh = $12,233

1,576,800 kWh * (5 mo/12 mo) * $0.00360/kWh = $ 2,365

Fixed Fuel Factor:

1,576,800 kWh * (6 mo/12 mo) * $0.015560/kWh = $12,267

1,576,800 kWh * (6 mo/12 mo) * $0.014435/kWh = $11,381

The total value of fuel cell displaced electricity using the above rates is $60,758.

Using the hospital's flat rate of $0.063/kWh, electricity savings would be $99,338. There is about $35,000 difference in electricity savings between the hospital's flat rate and the existing Industrial Power 44 rate.

Thermal savings were estimated previously at a thermal utilization of 75 percent. Assuming a 70 percent displaced boiler efficiency, the fuel cell would displace 5,913 MBtu (million Btu).

5,913 = (0.700 MBtu/hr * 8,760 hr/yr * 75% TU * 90% capacity factor) /
70% boiler eff.

Using an average natural gas rate of $2.55/MBtu, thermal cost savings of $15,078 were calculated for the fuel cell. The assumed natural gas cost for fuel cell input fuel is $2.55/MBtu. The fuel cell will consume 14,949 MBtu per year based on an electrical efficiency of 36 percent HHV (higher heating value). Input natural gas cost for the fuel cell is $38,120.

The net savings for the 75 percent thermal utilization case with the existing base were calculated at $41,775 (Table 7). For the proposed rate, the net savings were $37,716. If the hospital were to be credited for the fuel cell savings, the net savings would be $76,296. Table 7 also lists savings for thermal utilization of 100 and 50 percent, and for partial demand savings.

Table 7. Economic savings of fuel cell installation.

Case	ECF	TU	Displaced kWh	Displaced Gas (MBtu)	Electrical Savings	Thermal Savings	Nat. Gas Cost	Net Savings
Existing Electric Rate								
Max. Thermal	90%	100%	1,576,800	7,884	$64,817	$20,104	$38,120	$46,801
Base Case	90%	75%	1,576,800	5,913	$64,817	$15,078	$38,120	$41,775
Base Case – 50% Demand	90%	75%	1,576,800	5,913	$50,374	$15,078	$38,120	$27,332
Base Case – 50% TU	90%	50%	1,576,800	3,942	$64,817	$10,052	$38,120	$36,749
Proposed Electric Rate								
Max. Thermal	90%	100%	1,576,800	7,884	$60,758	$20,104	$38,120	$42,742
Base Case	90%	75%	1,576,800	5,913	$60,758	$15,078	$38,120	$37,716
Base Case – 50% Demand	90%	75%	1,576,800	5,913	$49,502	$15,078	$38,120	$26,460
Base Case – 50% TU	90%	50%	1,576,800	3,942	$60,758	$10,052	$38,120	$32,690
Flat Electric Rate								
Max. Thermal	90%	100%	1,576,800	7,884	$99,338	$20,104	$38,120	$81,322
Base Case	90%	75%	1,576,800	5,913	$99,338	$15,078	$38,120	$76,296
Base Case – 50% TU	90%	50%	1,576,800	3,942	$99,338	$10,052	$38,120	$71,270

Assumptions:

Electric Rate Schedule:	Various (see Economic Analysis)
Input Natural Gas Rate:	$2.55/MBtu
Fuel Cell Thermal Output:	700,000 Btu/hr
Fuel Cell Electrical Efficiency (HHV):	36%
Seasonal Boiler Efficiency:	70%

ECF = Fuel cell electric capacity factor

TU = Thermal utilization

The analysis is a general overview of the potential savings from the fuel cell. For the first 3 to 5 years, ONSI would be responsible for the fuel cell maintenance. Maintenance costs are not reflected in this analysis, but could represent a significant impact on net energy savings. Since detailed load energy profiles were not available, net energy savings could vary depending on actual thermal and electrical utilization.

3 Conclusions and Recommendations

This study concludes that the hospital at Laughlin AFB represents a good application for the ONSI 200 kW PC25C fuel cell. It is recommended that the fuel cell be located at the southeast corner of the building next to the electrical yard. A small retaining wall will have to be built to keep the fuel cell level and away from a storm run off drain. Electrical and thermal runs are relatively short. The fuel cell heat exchanger should interface with the space heating hot water loop and the steam DHW tank inside the mechanical room.

Net energy savings from the fuel cell using the existing rate and 75 percent thermal utilization are estimated to be $41,775. A new proposed rate could reduce energy savings by about $5,000 per year.

Appendix: Fuel Cell Site Evaluation Form

Site Name: **Laughlin Air Force Base** Contacts: **Larry Eckert**

Location: Del Rio, TX

1. Electric Utility: **Central Power & Light** Rate Schedule: **Industrial Power: 44**

2. Gas Utility: **Valero Industrial LP, Inc.** Rate Schedule: **Direct Purchase/Spot Market**

3. Available Fuels: **Natural Gas, Fuel Oil** Capacity Rate:

4. Hours of Use and Percent Occupied:
   Hospital occupied continuously
   Peak occupancy 7:30 am – 4:30 pm M-F

Weekdays	5	Hrs.	24
Saturday	1	Hrs.	24
Sunday	1	Hrs.	24

5. Outdoor Temperature Range: **Design temperatures: 31 to 98 °F**

6. Environmental Issues: **None**

7. Backup Power Need/Requirement: **Two 400 kW back-up generators for hospital**

8. Utility Interconnect/Power Quality Issues: **Base is subject to "blips" during summer storms**

9. On-site Personnel Capabilities: **Boiler plant personnel at facility**

10. Access for Fuel Cell Installation: **OK—Retaining wall will have to be installed. Fuel cell area must be at least 8 ft from fire department access "Y."**

11. Daily Load Profile Availability: **None available**

12. Security: **Site will install wall. A chain link fence is not acceptable.**

Site Layout

Facility Type: **Hospital** Age: **Built in 1977**

Construction: **Concrete with exterior brick facing and built up roof**

Square Feet: **79,400 sq ft**

See Figure 2

Show:

electrical/thermal/gas/water interfaces and length of runs
drainage
building/fuel cell site dimensions
ground obstructions

Electrical System

Service Rating: **480 V/12.5 kV 1,200 kVA transformer to hospital building**

Electrically Sensitive Equipment: **Computers, but have UPS installed**

Largest Motors (hp, usage): **N/A**

Grid Independent Operation?: **No**

Steam/Hot Water System

Description: **Two Hurst steam boilers provide heat for domestic hot water (DHW) and space heating loop. PVI Industries DHW tank is steam heated.**

System Specifications: **Hurst boilers (2) model #54-GP2-200-150**

Fuel Type: **Natural Gas/fuel oil**

Max Fuel Rate: **10,500.000 Btu/hr (Min. = 3,000,000 Btu/hr)**

Storage Capacity/Type: **PVI Industries DHW tank model 2500 P 600 A-QS**
Operates at 40 psi and 138 °F
Storage capacity is 600 gal.

Interface Pipe Size/Description: **4 in. at steam/hot water heat exchanger**

End Use Description/Profile: **Steam generated by the two boilers passes through the DHW tank to heat 600 gal of hot water storage**

Space Cooling System

Description: **One 123-ton York chiller and one 123 ton Carrier chiller.**

Air Conditioning Configuration:
Type: **York (model #OT A5 A3-OO CTC) Carrier (Model #19DG4524AE)**
Rating: **123 tons each**
Make/Model:

Seasonality Profile:

Space Heating System

Description: **Steam/hot water space heating heat exchanger located in mechanical room used to distribute hot water to 74 fan coils throughout the hospital.**

Fuel: **Natural Gas**

Rating:
Water supply Temp: 120 to 160 °F
Water Return Temp: 105 to 150 °F

Make/Model:

Thermal Storage (space?): **None**

Seasonality Profile: **Space heating requirements vary widely depending on the year; generally 4-6 mo/yr. Reheating used throughout the year.**

CERL Distribution

Commander, Laughlin AFB
ATTN: 47 CES/CEOE (2)

Chief of Engineers
ATTN: CEHEC-IM-LH (2)

Engineer Research and Development Center (Libraries)
ATTN: ERDC, Vicksburg, MS
ATTN: Cold Regions Research, Hanover, NH
ATTN: Topographic Engineering Center, Alexandria, VA

Defense Tech Info Center 22304
ATTN: DTIC-O

8
4/01

REPORT DOCUMENTATION PAGE

Form Approved
OMB No. 0704-0188

Public reporting burden for this collection of information is estimated to average 1 hour per response, including the time for reviewing instructions, searching existing data sources, gathering and maintaining the data needed, and completing and reviewing this collection of information. Send comments regarding this burden estimate or any other aspect of this collection of information, including suggestions for reducing this burden to Department of Defense, Washington Headquarters Services, Directorate for Information Operations and Reports (0704-0188), 1215 Jefferson Davis Highway, Suite 1204, Arlington, VA 22202-4302. Respondents should be aware that notwithstanding any other provision of law, no person shall be subject to any penalty for failing to comply with a collection of information if it does not display a currently valid OMB control number. PLEASE DO NOT RETURN YOUR FORM TO THE ABOVE ADDRESS.

1. REPORT DATE (DD-MM-YYYY)
04-2001

2. REPORT TYPE
Final

3. DATES COVERED (From - To)

4. TITLE AND SUBTITLE
Site Evaluation for Application of Fuel Cell Technology: Laughlin Air Force Base, TX

5a. CONTRACT NUMBER
88-94-D0020

5b. GRANT NUMBER

5c. PROGRAM ELEMENT NUMBER

6. AUTHOR(S)
Michael J. Binder, Franklin H. Holcomb, and William R. Taylor

5d. PROJECT NUMBER
DACA

5e. TASK NUMBER

5f. WORK UNIT NUMBER

7. PERFORMING ORGANIZATION NAME(S) AND ADDRESS(ES)
U.S. Army Engineer Research and Development Center (ERDC)
Construction Engineering Research Laboratory (CERL)
P.O. Box 9005
Champaign, IL 61826-9005

8. PERFORMING ORGANIZATION REPORT NUMBER
ERDC/CERL TR-01-41

9. SPONSORING / MONITORING AGENCY NAME(S) AND ADDRESS(ES)
Laughlin Air Force Base
251 Fourth Street
Laughlin AFB, TX 78843-5143

10. SPONSOR/MONITOR'S ACRONYM(S)
47 CES/CEOE

11. SPONSOR/MONITOR'S REPORT NUMBER(S)

12. DISTRIBUTION / AVAILABILITY STATEMENT
Approved for public release; distribution is unlimited.

13. SUPPLEMENTARY NOTES
Copies are available from the National Technical Information Service, 5285 Port Royal Road, Springfield, VA 22161.

14. ABSTRACT

Fuel cells are an environmentally clean, quiet, and a highly efficient method for generating electricity and heat from natural gas and other fuels. Researchers at the U.S. Army Engineer Research and Development Center (ERDC), Construction Engineering Research Laboratory (CERL) have actively participated in the development and application of advanced fuel cell technology since fiscal year 1993 (FY93). CERL has selected and evaluated application sites, supervised the design and installation of fuel cells, actively monitored the operation and maintenance of fuel cells, and compiled "lessons learned" for feedback to manufacturers for 29 of 30 commercially available fuel cell power plants and their thermal interfaces installed at Department of Defense (DOD) locations.

This report presents an overview of the information collected at the Laughlin Air Force Base, TX, along with a conceptual fuel cell installation layout and description of potential benefits the technology can provide at that location. Similar summaries of the site evaluation surveys for the remaining 28 sites where CERL has managed and continues to monitor fuel cell installation and operation are available in the companion volumes to this report.

5. SUBJECT TERMS
uel cells
nergy conservation
fuel technology alternatives
Laughlin AFB, TX

6. SECURITY CLASSIFICATION OF:

a. REPORT	b. ABSTRACT	c. THIS PAGE	17. LIMITATION OF ABSTRACT	18. NUMBER OF PAGES	19a. NAME OF RESPONSIBLE PERSON
Unclassified	Unclassified	Unclassified	SAR	30	Michael J. Binder
					19b. TELEPHONE NUMBER (include area code) (217) 373-7214

Standard Form 298 (Rev. 8-98)
Prescribed by ANSI Std. 239.18