ERDC/CERL TR-01-42

Construction Engineering Research Laboratory

US Army Corps of Engineers®
Engineer Research and Development Center

Site Evaluation for Application of Fuel Cell Technology

Fort Richardson, AK

Michael J. Binder, Franklin H. Holcomb, and William R. Taylor

April 2001

20010502 056

Approved for public release; distribution is unlimited.

ERDC/CERL TR-01-42

Construction Engineering Research Laboratory

US Army Corps of Engineers®
Engineer Research and Development Center

Site Evaluation for Application of Fuel Cell Technology

Fort Richardson, AK

Michael J. Binder, Franklin H. Holcomb, and William R. Taylor

April 2001

Approved for public release; distribution is unlimited.

Foreword

In fiscal years 93 and 94, Congress provided funds for natural gas utilization equipment, part of which was specifically designated for procurement of natural gas fuel cells for power generation at military installations. The purchase, installation, and ongoing monitoring of 30 fuel cells provided by these appropriations has come to be known as the "DOD Fuel Cell Demonstration Program." Additional funding was provided by: the Office of the Deputy Under Secretary of Defense for Industrial Affairs & Installations, ODUSD (IA&I)/HE&E; the Strategic Environmental Research & Development Program (SERDP); the Assistant Chief of Staff for Installation Management (ACSIM); the U.S. Army Center for Public Works (CPW); the Naval Facilities Engineering Service Center (NFESC); and Headquarters (HQ), Air Force Civil Engineer Support Agency (AFCESA).

This report documents work done at Fort Richardson, Anchorage, AK. Special thanks is owed to the Fort Richardson point of contact (POC), Jim Buckley, for providing investigators with access to needed information for this work. The work was performed by the Energy Branch (CF-E), of the Facilities Division (CF), Construction Engineering Research Laboratory (CERL). The CERL Principal Investigator was Michael J. Binder. Part of this work was performed by Science Applications International Corp. (SAIC), under Contract DACA88-94-D-0020, task orders 0002, 0006, 0007, 0010, and 0012. The technical editor was William J. Wolfe, Information Technology Laboratory. Larry M. Windingland is Chief, CEERD-CF-E, and L. Michael Golish is Chief, CEERD-CF. The associated Technical Director was Gary W. Schanche. The Acting Director of CERL is William D. Goran.

CERL is an element of the U.S. Army Engineer Research and Development Center (ERDC), U.S. Army Corps of Engineers. The Director of ERDC is Dr. James R. Houston and the Commander is COL James S. Weller.

DISCLAIMER

The contents of this report are not to be used for advertising, publication, or promotional purposes. Citation of trade names does not constitute an official endorsement or approval of the use of such commercial products. All product names and trademarks cited are the property of their respective owners.

The findings of this report are not to be construed as an official Department of the Army position unless so designated by other authorized documents.

DESTROY THIS REPORT WHEN IT IS NO LONGER NEEDED. DO NOT RETURN IT TO THE ORIGINATOR.

Contents

Foreword 2

List of Figures and Tables 4

1 Introduction 5

Background 5
Objective 6
Approach 6
Units of Weight and Measure 7

2 Site Description 8

Site Layout 8
Electrical System 8
Steam and Hot Water Systems 11
Space-Heating System 11
Space-Cooling System 11
Fuel Cell Location 11
Fuel Cell Interfaces 13

3 Economic Analysis 16

4 Conclusions and Recommendations 19

Appendix: Fuel Cell Site Evaluation Form 20

CERL Distribution 26

Report Documentation Page 27

List of Figures and Tables

Figures

1 National Guard Armory at Fort Richardson site layout 9
2 Schematic view of National Guard Armory mechanical room 10
3 Fuel cell location and interfaces at National Guard Armory 12
4 Fuel cell thermal interface 13

Tables

1 Companion ERDC/CERL site evaluation reports 7
2 DHW and space-heating loads 14
3 National Guard Armory electricity consumption and costs 16
4 National Guard Armory natural gas consumption 17
5 Economic savings of fuel cell installation 17

1 Introduction

Background

Fuel cells generate electricity through an electrochemical process that combines hydrogen and oxygen to generate direct current (DC) electricity. Fuel cells are an environmentally clean, quiet, and a highly efficient method for generating electricity and heat from natural gas and other fuels. Air emissions from fuel cells are so low that several Air Quality Management Districts in the United States have exempted fuel cells from requiring operating permits. Today's natural gas-fueled fuel cell power plants operate at electrical conversion efficiencies of 40 to 50 percent; these efficiencies are predicted to climb to 50 to 60 percent in the near future. In fact, if the heat from the fuel cell process is used in a cogeneration system, efficiencies can exceed 85 percent. By comparison, current conventional coal-based technologies operate at efficiencies of 33 to 35 percent.

Phosphoric Acid Fuel Cells (PAFCs) are in the initial stages of commercialization. While PAFCs are not now economically competitive with other more conventional energy production technologies, current cost projections predict that PAFC systems will become economically competitive within the next few years as market demand increases.

Fuel cell technology has been found suitable for a growing number of applications. The National Aeronautics and Space Administration (NASA) has used fuel cells for many years as the primary power source for space missions and currently uses fuel cells in the Space Shuttle program. Private corporations have recently been working on various approaches for developing fuel cells for stationary applications in the utility, industrial, and commercial markets. Researchers at the U.S. Army Engineer Research and Development Center (ERDC), Construction Engineering Research Laboratory (CERL) have actively participated in the development and application of advanced fuel cell technology since fiscal year 1993 (FY93), and have successfully executed several research and demonstration work units with a total funding of approximately $55M.

As of November 1997, 30 commercially available fuel cell power plants and their thermal interfaces have been installed at DoD locations, CERL managed 29 of these installations. As a consequence, the Department of Defense (DoD) is the

owner of the largest fleet of fuel cells worldwide. CERL researchers have developed a methodology for selecting and evaluating application sites, have supervised the design and installation of fuel cells, and have actively monitored the operation and maintenance of fuel cells, and compiled "lessons learned" for feedback to manufacturers. This accumulated expertise and experience has enabled CERL to lead in the advancement of fuel cell technology through major efforts such as the DoD Fuel Cell Demonstration Program, the Climate Change Fuel Cell Program, research and development efforts aimed at fuel cell product improvement and cost reduction, and conferences and symposiums dedicated to the advancement of fuel cell technology and commercialization.

This report presents an overview of the information collected at Fort Richardson, AK along with a conceptual fuel cell installation layout and description of potential benefits the technology can provide at that location. Similar summaries of the site evaluation surveys for the remaining 28 sites where CERL has managed and continues to monitor fuel cell installation and operation are available in the companion volumes to this report (Table 1).

Objective

The objective of this work was to evaluate Fort Richardson as a potential location for a fuel cell application.

Approach

On 13-15 May 1996, CERL and Science Applications International Corp. (SAIC) representatives visited Fort Richardson (the Site) to investigate it as a potential location for a 200 kW fuel cell. This report presents an overview of information collected at the Site along with a conceptual fuel cell installation layout and description of potential benefits. The Appendix to this report contains a copy of the site evaluation form filled out at the Site.

Table 1. Companion ERDC/CERL site evaluation reports.

Location	Report No.
Pine Bluff Arsenal, AR	TR 00-15
Naval Oceanographic Office, John C. Stennis Space Center, MS	TR 01-3
Fort Bliss, TX	TR 01-13
Fort Huachuca, AZ	TR 01-14
Naval Air Station Fallon, NV	TR 01-15
Construction Battalion Center (CBC), Port Hueneme, CA	TR 01-16
Fort Eustis, VA	TR 01-17
Watervliet Arsenal, Albany, NY	TR 01-18
911th Airlift Wing, Pittsburgh, PA	TR 01-19
Westover Air Reserve Base (ARB), MA	TR 01-20
Naval Education Training Center, Newport, RI	TR 01-21
U.S. Naval Academy, Annapolis, MD	TR 01-22
Davis-Monthan AFB, AZ	TR 01-23
Picatinny Arsenal, NJ	TR 01-24
U.S. Military Academy, West Point, NY	TR 01-28
Barksdale Air Force Base (AFB), LA	TR 01-29
Naval Hospital, Naval Air Station Jacksonville, FL	TR 01-30
Nellis AFB, NV	TR 01-31
Naval Hospital, Marine Corps Air Ground Combat Center (MCAGCC), Twentynine Palms, CA	TR 01-32
National Defense Center for Environmental Excellence (NDCEE), Johnstown, PA	TR 01-33
934th Airlift Wing, Minneapolis, MN	TR 01-38
Laughlin AFB, TX	TR 01-41
Fort Richardson, AK	TR 01-42
Kirtland AFB, NM	TR 01-43
Subase New London, Groton, CT	TR 01-44
Edwards AFB, CA	TR 01-Draft
Little Rock AFB, AR	TR 01-Draft
Naval Hospital, Marine Corps Base Camp Pendleton, CA	TR 01-Draft
U.S. Army Soldier Systems Center, Natick, MA	TR 01-Draft

Units of Weight and Measure

U.S. standard units of measure are used throughout this report. A table of conversion factors for Standard International (SI) units is provided below.

1 ft	=	0.305 m
1 mile	=	1.61 km
1 acre	=	0.405 ha
1 gal	=	3.78 L
°F	=	°C (X 1.8) + 32

2 Site Description

Fort Richardson is located in Anchorage, AK. The ASHRAE design temperatures for the Site are 68 and -18 °F. Extreme temperatures range from 75 to -30 °F. Fort Richardson serves as an arctic fighters training facility and is home to light infantry personnel. Fort Richardson also houses the Alaska National Guard, which provides logistical support.

The National Guard armory building was investigated as a potential site for a 200 kW fuel cell. The armory building was built 4 years ago. It is a 200,000 sq ft building that supports National Guard personnel on training weekends. The facility currently has two space-heating boilers and two domestic hot water heaters. Space heating is required throughout the year. The building has a 2,500 kVA electric transformer just outside the mechanical room.

The National Guard has purchased a 200 kW fuel cell in addition to the one being considered as part of the DoD demonstration program. This site evaluation report pertains to the DoD fuel cell. A few comments on the second National Guard purchased fuel cell are provided in this site evaluation.

Site Layout

The National Guard armory building is a curved (about 1/3 circle) building. Figure 1 shows the back side of the building where the mechanical/electrical rooms are located. The electric transformer is just outside the electrical room. Natural gas is just outside the mechanical room. The mechanical room has two space-heating hot water boilers and two domestic hot water (DHW) heaters (Figure 2). There is a 500 kW emergency diesel generator for the armory building.

Electrical System

The base distributes electricity at 7,200 V. There is a 480/7,200 V, 2,500 kVA transformer located outside the electrical room. There are spare electrical panels located inside the electrical room.

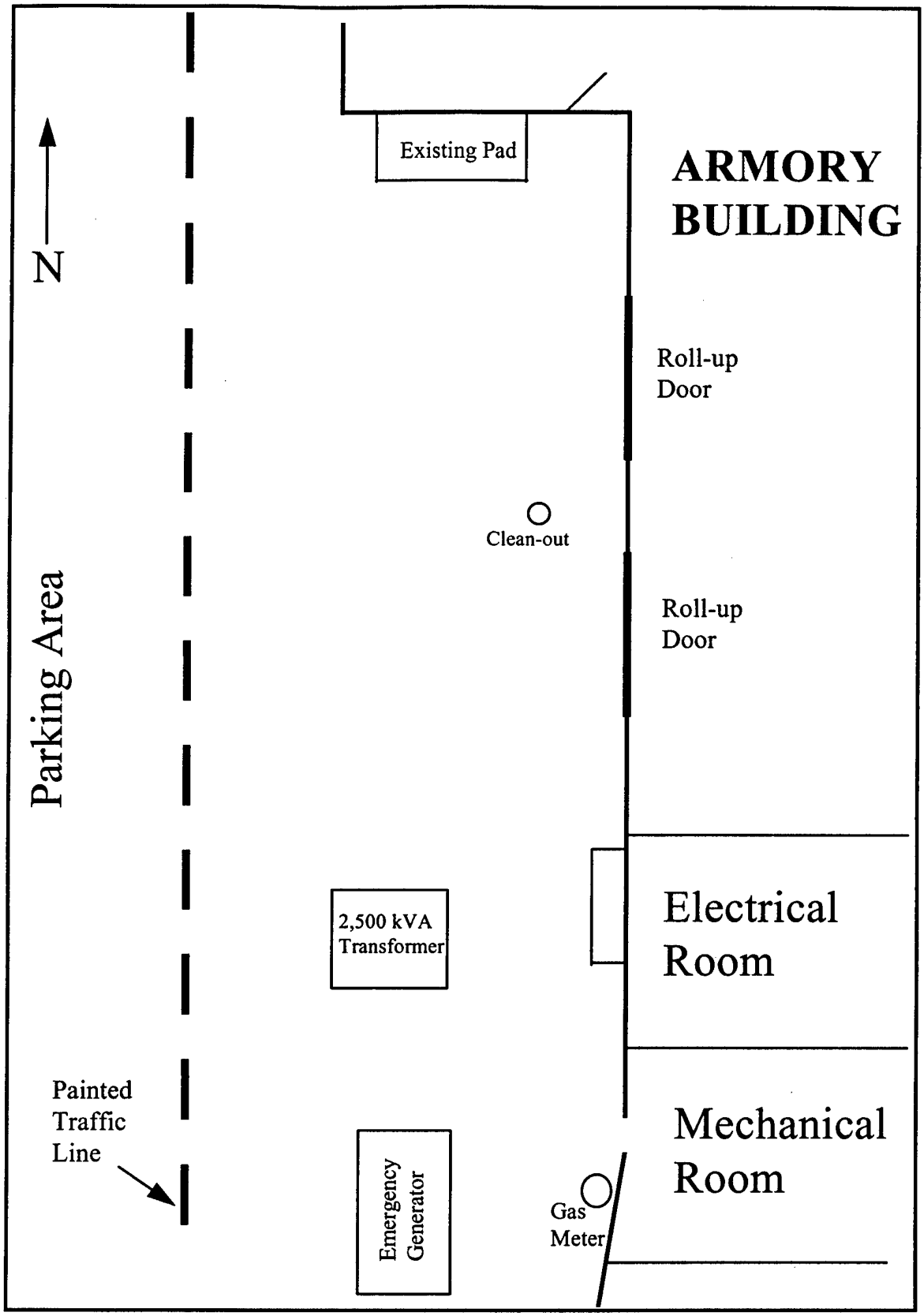

Figure 1. National Guard Armory at Fort Richardson site layout.

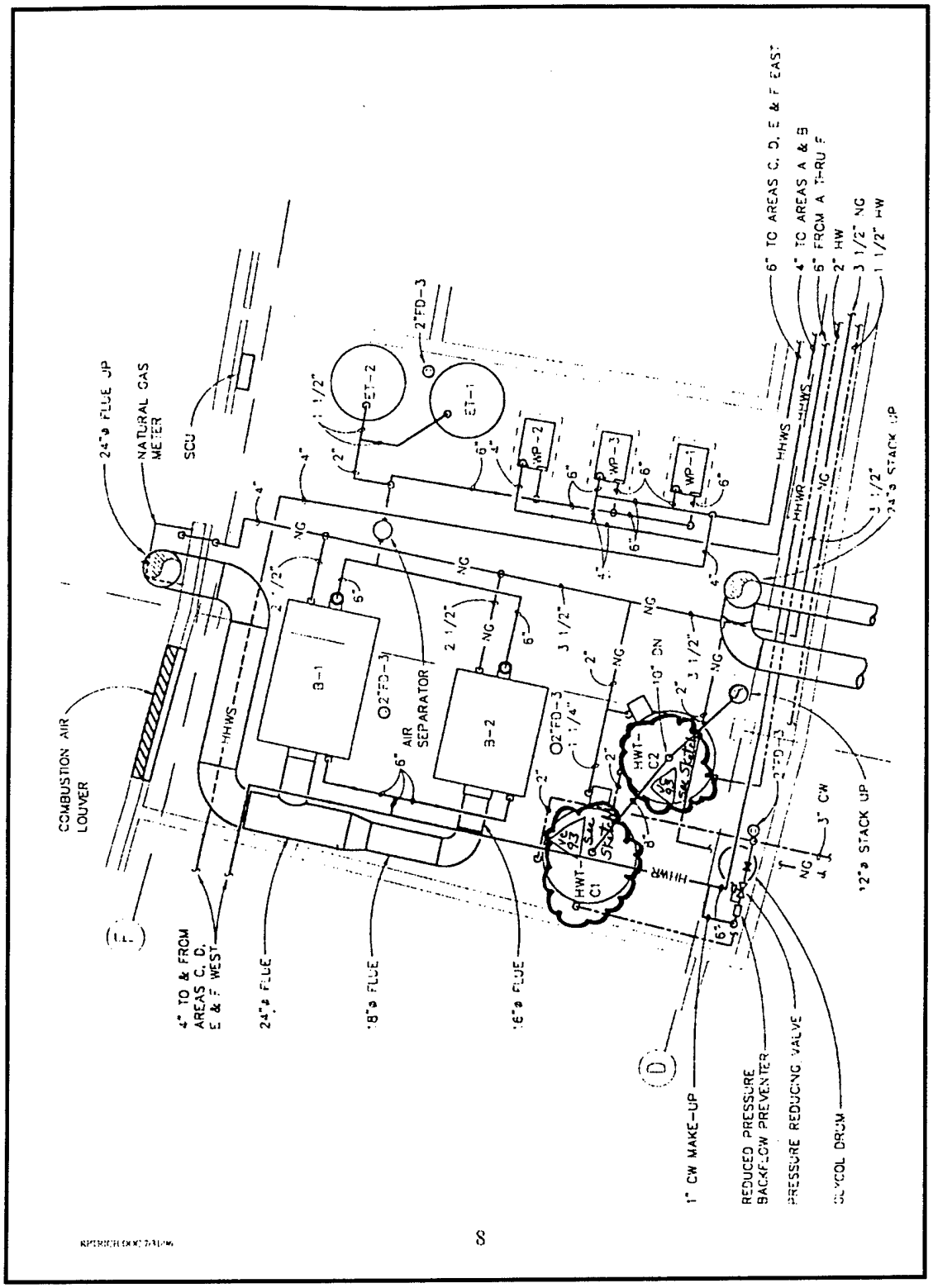

Figure 2. Schematic view of National Guard Armory mechanical room.

Steam and Hot Water Systems

There are two domestic hot water heaters in the armory building. The Aqua Kinetics, Inc. heaters operate on natural gas and are rated at 1,000 kBtu/hr and 720 kBtu/hr. The hot water load is not very large, being distributed to bathrooms, a kitchen, and a health club.

Space-Heating System

Two Weil-McLain boilers provide hydronic space heating to the armory building. The boilers are rated at 5,502 kBtu/hr and 3,608 kBtu/hr gas input. Generally, only one space heat boiler operates at a time. Hot water is distributed by three pumps for space heating to individual zones throughout the building.

Space-Cooling System

There is no space cooling in the armory.

Fuel Cell Location

The fuel cell should be sited on the west side (back) of the boiler plant (Figure 3). The fuel cell should run in a north-south direction with the thermal outlet side facing east towards the building. The cooling module can be positioned in a north-south direction and the nitrogen tanks can be positioned against the wall as shown. The base has determined that the fuel cell being 6 ft from the roll up door is adequate.

The thermal piping from the fuel cell to the mechanical room will be approximately 90 ft. Natural gas should be tied into the main gas line running through the parking lot (about 40 ft). The make-up water can be taken from inside the building (about 30 ft). The electrical run will be approximately 60 ft over to the electrical room. The cooling module piping run is about 20 ft.

If a second fuel cell is installed at the armory, it could be placed where the cooling module in Figure 3 is shown. A minimum of 8 ft between fuel cells would be required to accommodate maintenance of the fuel cells. The same orientation for the fuel cells is recommended. The cooling modules would then need to be located at a nearby available location.

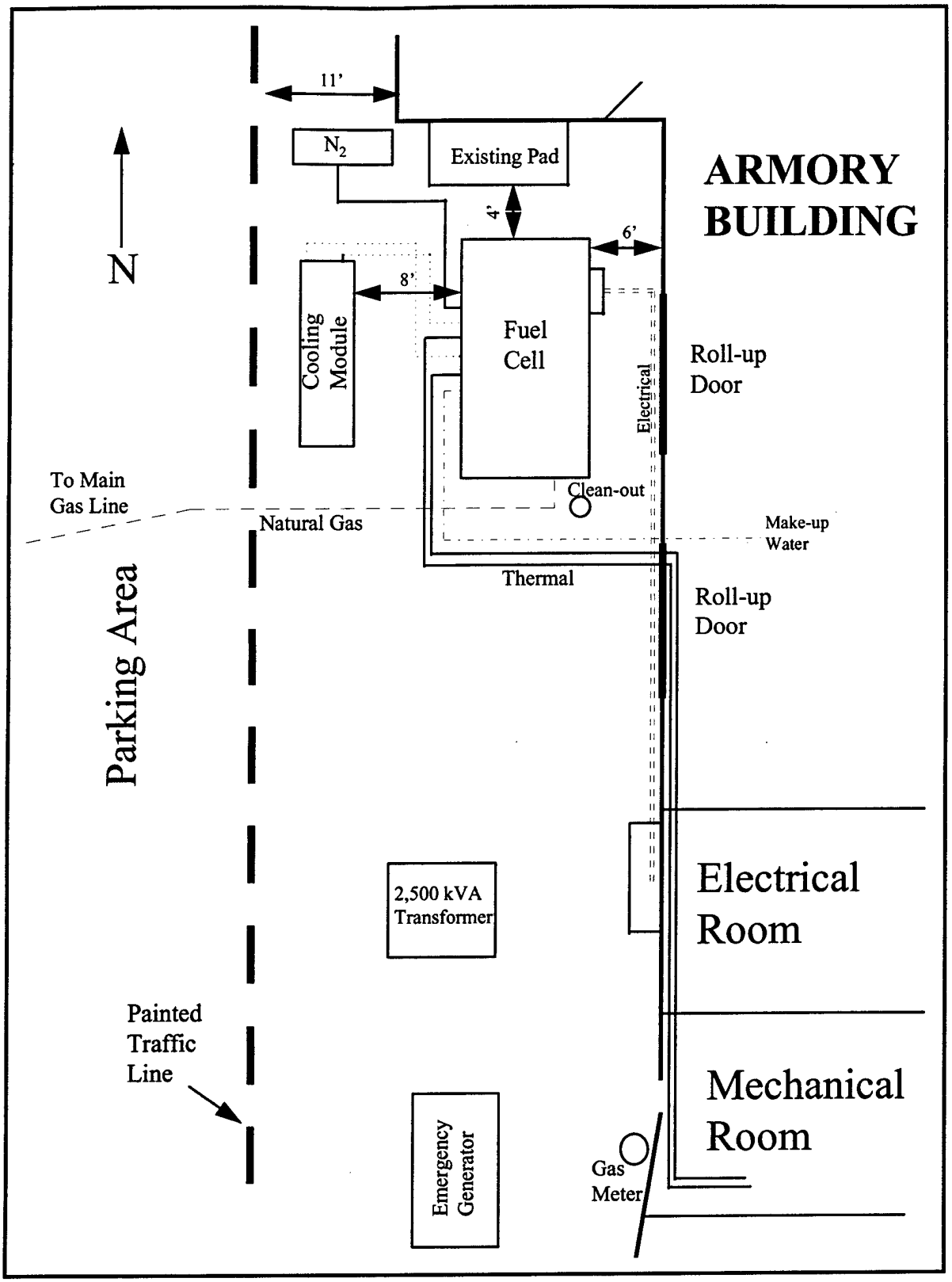

Figure 3. Fuel cell location and interfaces at National Guard Armory.

Fuel Cell Interfaces

The fuel cell electrical output will feed into the Armory's 480 V system at the electric panel in the first floor electric room. The panel is fed by a 480/7200 V, 2500 kVA transformer. The average electric demand at the Armory is 217 kW. There will be periods when the 200 kW fuel cell output will exceed the Armory demand. Any excess fuel cell output will be fed through the transformer into the base grid. Base personnel want to use the grid independent option on the fuel cell to provide power to the Armory during grid power outages. A load of less than 200 kW will have to segregated to accomplish this. The identification and segregation of this 200 kW load would be the responsibility of Base personnel.

The fuel cell thermal output will be used to heat the domestic hot water (DHW) and the hydronic space-heating loop. The low grade fuel cell heat exchanger will supply heat to the DHW system and the high grade fuel cell heat exchanger will supply heat to the hydronic space-heating loop (Figure 4). The space-heating water supply temperature is nominally 180 °F with a return temperature of 160 °F. These temperatures preclude the use of the low grade heat exchanger, which can supply a maximum temperature of about 150 °F.

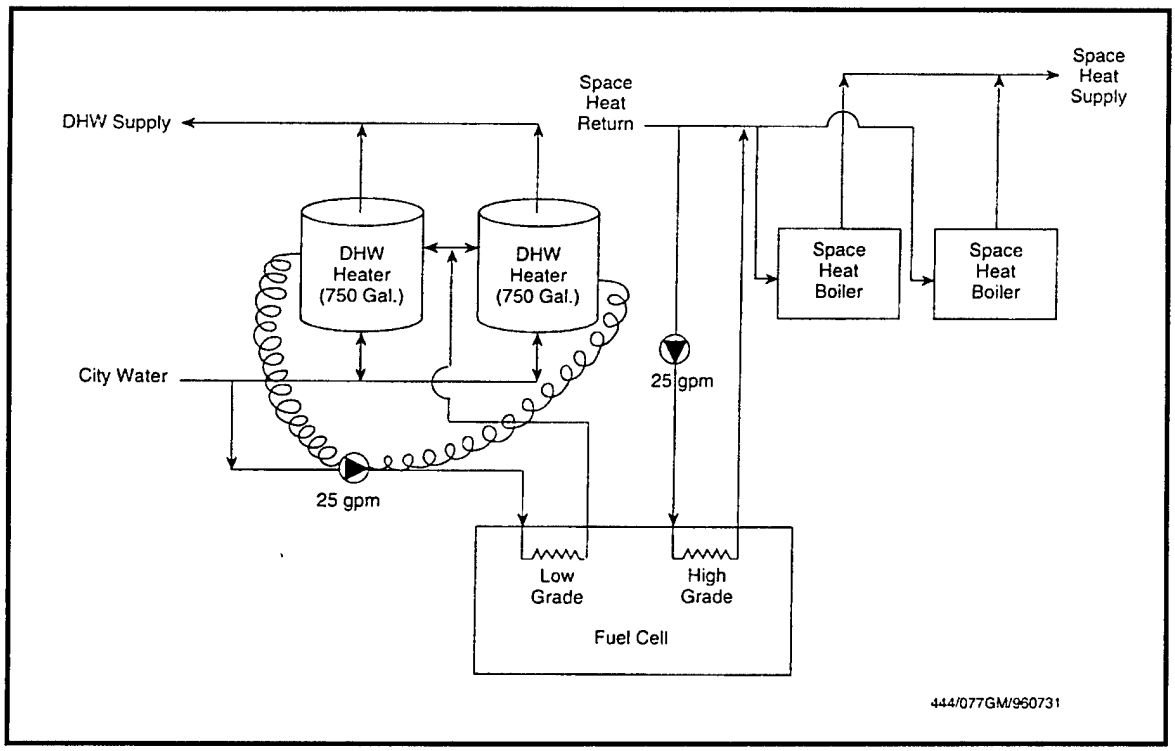

Figure 4. Fuel cell thermal interface.

DHW make-up water will be heated in the low grade heat exchanger and fed into the top of the 750-gal storage tanks. A 25 gpm circulating pump should be installed to control the flow. The pump should run whenever the fuel cell is operating and the storage tank temperature is below 140 °F. The circulating pump will provide the desired flow rate to the fuel cell without restricting the flow during periods of high DHW make-up water flow. When there is low or no make-up DHW water flow the pump will pull water from the storage tanks through the fuel cell. This will enable the fuel cell to also heat the hot water storage tanks.

Space-heating return water will be heated in the fuel cell high grade heat exchanger and fed back into the return line prior to the boiler. A 25 gpm circulating pump should be used to control this flow. The return water temperature is nominally 160 °F. At 25 gpm the high grade heat exchanger will supply 190 °F water back into the return line. There are three space-heating circulating pumps, each rated at 300 gpm. Assuming a flow rate of 300 gpm in the space-heating loop, the mixed temperature, after feeding in the 190 °F water from the fuel cell, will be about 162 °F. This will then be heated to the desired 180 °F supply temperature by the existing boilers. The DHW and space-heating loads were estimated based on gas usage in the Armory. Table 2 lists gas usage from the gas utility (ENSTAR, Inc.).

Table 2. DHW and space-heating loads.

Month	MCF	Space Heat(1) (KBtu/hr)	DHW(2) (KBtu/hr)
July 1994	432	399	20
Aug 1994	255	227	20
Sept 1994	1,280	1262	20
Oct 1994	1,959	1878	20
Nov 1994	3,161	3145	20
Dec 1994	3,404	3279	20
Jan 1995	1,570	1501	20
Feb 1995	1,933	2054	20
Mar 1995	2,329	2237	20
Apr 1995	1,136	1118	20
May 1995	945	896	20
June 1995	465	445	20

(1) = [(MCF/month * 1030 kBtu/MCF * 70% boiler eff.) / hr per month] - DHW load
(2) = Estimated from previously monitored office building data

The DHW load was estimated at 20 kBtu/hr based on data from other previously monitored office buildings (Ref. Characterization of Instrumented Sites for the Onsite Fuel Cell Field Test Project, Vol. IV GRI 86/0292.4). The space-heating load was calculated as follows:

S/H (kBtu) = [(Gas use, MCF/mo)(1030 kBtu/MCF)(0.7 boiler eff) / (hrs/mo)] – 20 kBtu/hr (DHW).

It was assumed in the cold months (Sept - April) that the space-heating system operated 24 hr per day and in the cool months (May - August) that the space-heating system operated 8 hr per day. Therefore, the average hourly space-heating loads shown in the above table, for May through August, must be ratioed up by 24/8 to determine the load when operating. The lowest space-heating load occurred in August averaging 227 kBtu/hr over 24 hr/day. This was estimated to be 681 kBtu/hr (227 kBtu/hr * 24/8) when operating.

The fuel cell thermal utilization was estimated to be 100 percent of the 380 kBtu/hr available from the high grade heat exchanger from September through April and 33 percent May through August. The fuel cell will, therefore, displace 2,577 MBtu for space heating:

2,577 MBtu = (0.380 MBtu/hr * 5808 hrs/yr + 0.380 MBtu/hr * 33% * 2952 hrs/yr)

The fuel cell will also displace 175 MBtu (.020 MBtu/hr * 8,760 hr/yr) for domestic hot water. The annual fuel cell thermal utilization is estimated to be:

45% = (2,577 MBtu/yr + 175 MBtu/yr) / (0.700 MBtu/hr x 8,760 hrs/yr)

If a second fuel cell is installed at the armory, the thermal load would be space heating. Nearly all of the available thermal from the second fuel cell could be used when the space-heating system is operating. The exception would be in August when the average hourly load is 681 kBtu/hr. During this month, the second fuel cell could supply 301 kBtu/hr during the estimated 8 hr/day that space heating is required (681 kBtu/hr - 380 kBtu/hr). The second fuel cell could supply 2,558 MBtu in a year:

2,558 MBtu = (0.380 MBtu/hr * 5,808 hrs/yr + 0.380 MBtu/hr * 2,208 hrs/yr * 33% + 0.301 MBtu/hr * 744 hrs/yr * 33%)

The electric output from the second fuel cell would primarily be fed into the base grid. Overall, 46 percent of the combined 400 kW fuel cell output would be fed into the grid.

46% = 1 - (217 kW / 400 kW)

3 Economic Analysis

The National Guard purchases electricity for several buildings at Fort Richardson, including the armory, from the base Public Works Center. The armory pays a flat rate of $0.063/kWh for electricity, which is metered separately from the other National Guard buildings. Table 3 lists the armory's electricity consumption.

Natural gas is purchased from Enstar Corporation. Table 4 lists the armory's natural gas consumption. No detailed historic natural gas cost data was provided, although average annual costs were provided by base personnel.

Electric savings from the fuel cell were calculated based on the fuel cell operating 90 percent of the year (1,576,800 kWh). At a flat rate of $0.063/kWh, electricity savings from the fuel cell would be $99,338.

It was estimated previously that the fuel cell would displace 2,752 MBtu/yr of thermal energy at the armory (45 percent thermal utilization). Assuming a displaced boiler efficiency of 70 percent and a fuel cell capacity factor of 90 percent, the fuel cell would displace 3,538 MBtu of natural gas per year:

3,538 MBtu = (2,752 MBtu * 90%) / 70% boiler efficiency

Table 3. National Guard Armory electricity consumption and costs.

Date	KWH	Cost	$/KWH
Jul-94	176,640	$11,128	$0.063
Sep-94	167,040	$10,524	$0.063
Oct-94	222,720	$14,031	$0.063
Nov-94	157,440	$9,919	$0.063
Dec-94	168,960	$10,644	$0.063
Jan-95	172,800	$10,886	$0.063
Feb-95	163,200	$10,282	$0.063
Mar-95	205,440	$12,943	$0.063
Apr-95	140,160	$8,830	$0.063
May-95	174,720	$11,007	$0.063
Jun-95	168,960	$10,644	$0.063
Jul-95	149,760	$9,435	$0.063
Totals	2,067,840	$130,274	$0.063

Table 4. National Guard Armory natural gas consumption.

Date	CCF
Aug-94	2,555
Sep-94	12,800
Oct-94	19,594
Nov-94	31,614
Dec-94	34,044
Jan-95	15,700
Feb-95	19,327
Mar-95	23,288
Apr-95	11,364
May-95	9,453
Jun-95	4,649
Jul-95	47,738
Total	232,126

The average natural gas rate paid by the armory was $2.89/MCF. This translates into approximately $2.81/MBtu ($2.89 / 1.03 MBtu/MCF). The thermal cost savings from the fuel cell based on this rate would be $9,942.

The assumed average natural gas cost for fuel cell input fuel is $2.81/MBtu. The fuel cell would consume 14,949 MBtu per year based on an electrical efficiency of 36 percent HHV (higher heating value). Input natural gas cost for the fuel cell would be $42,007.

The net savings for the 45 percent thermal utilization case were calculated at $67,273 (Table 5). Table 3 also lists savings for maximum thermal savings.

Table 5. Economic savings of fuel cell installation.

Case	ECF	TU	Displaced kWh	Displaced Gas (MBtu)	Electrical Savings	Thermal Savings	Nat. Gas Cost	Net Savings
Max. Thermal	90%	100%	1,576,800	7,884	$99,338	$22,784	$42,007	$80,115
Base Case	90%	45%	1,576,800	3,538	$99,338	$9,942	$42,007	$67,273

Assumptions:

Electricity Rate: $0.063 /kWh
Natural Gas Rate: $2.81 /MBtu
Fuel Cell Thermal Output: 700,000 Btu/hr
Fuel Cell Electrical Efficiency: 36%
Assumed Boiler Efficiency: 70%
Natural Gas Annual Input: 14,949 MBtu/yr
ECF = Fuel cell electric capacity factor
TU = Thermal utilization

The impact of installing a second fuel cell would depend on whether the National Guard can get a full $0.063/kWh credit for the electricity put into the grid by the second fuel cell. If so, then electric savings would be an additional $99,338. Thermal savings would be $9,242 and natural gas costs would be the same as the first fuel cell ($42,007). The net savings for the fuel cell would be $66,573. It is critical that the additional electricity exported to the base grid be credited at the $0.063/kWh rate for other National Guard buildings to make two fuel cells at the armory economically viable.

The analysis is a general overview of the potential savings from the fuel cell. For the first 3 to 5 years, ONSI would be responsible for the fuel cell maintenance. Maintenance costs are not reflected in this analysis, but could represent a significant impact on net energy savings. Since detailed load energy profiles were not available, net energy savings could vary depending on actual thermal and electrical utilization.

4 Conclusions and Recommendations

The National Guard armory at Fort Richardson represents a good technical and economic application for a 200 kW fuel cell. A year round space-heating thermal load utilizes nearly all of the high grade thermal output of the fuel cell. Net savings were estimated at $67,273. Both the high grade heat exchanger option and the grid independent option will be required for this installation.

The fuel cell should be located at the rear of the building near the roll up doors. The fuel cell can be electrically connected to a free panel inside the electric room. Interfacing with the low and high grade heat exchangers will occur inside the mechanical room. Interface wiring and piping runs will be approximately 50 to 100 ft. No fence would be required, but bollards should be installed in front of the fuel cell to prevent damage by moving vehicles from the nearby parking lot.

The economics of a second fuel cell being installed at the armory hinges on the ability to receive full $0.063/kWh credit for electricity exported to the grid. If so, then the economics for the second fuel cell are nearly identical to the first. The fuel cell can fit into the area of the first one, but location of the cooling modules will need to be identified.

Appendix: Fuel Cell Site Evaluation Form

Site Name: **Fort Richardson** Contacts: **Jim Buckley**
Location: **Anchorage, Alaska**

1. Electric Utility: Base Public Works Rate Schedule: **Flat Rate**
2. Gas Utility: **Enstar Gas** Rate Schedule: **Rate C**

3. Available Fuels: **Natural Gas, Fuel Oil, Diesel**
   Capacity Rate:

4. Hours of Use and Percent Occupied:
   National Guard Armory
   Peak: Business hrs/ training weekends

Weekdays	5	Hrs. 24
Saturday	1	Hrs. 24
Sunday	1	Hrs. 24

5. Outdoor Temperature Range:
   Design dry bulb temperatures: **68 to -18 °F**
   Extremes: **-30 to 75 °F**

6. Environmental Issues: **Approvals already obtained**

7. Backup Power Need/Requirement: **500 kW diesel generator at Armory**

8. Utility Interconnect/Power Quality Issues: **None**

9. On-site Personnel Capabilities: **Boiler plant personnel available**

10. Access for Fuel Cell Installation: **Space is small, but easy access**

11. Daily Load Profile Availability: **No data available**

12. Security: **No Fence is required, but bollards should be installed.**

Site Layout

Facility Type: **Armory** Age: **4 yr**

Construction: **Cinder Block**

Square Feet: **200,500 sq ft**

See Figures 2 and 3

Show:

electrical/thermal/gas/water interfaces and length of runs
drainage
building/fuel cell site dimensions
ground obstructions

Electrical System

Service Rating: **480/7200 V, 2500 kVA transformer at Armory**

Electrically Sensitive Equipment: **Computers**

Largest Motors (hp, usage): **2 x 20 H.P. motors**

Grid Independent Operation?: **Yes, site to identify segregated loads**

Steam/Hot Water System

Description: **Two Aqua Kinetics DHW heaters**

System Specifications:

Fuel Type: **Natural Gas**

Max Fuel Rate: **1,000 MBH and 720 MBH**

Storage Capacity/Type: **750 gal each tank**

Interface Pipe Size/Description:

End Use Description/Profile: **Hot water provided for lavatories, health club, and kitchen**

Space-Cooling System

Description: **No space cooling at the Armory**

Air Conditioning Configuration:

Type:

Rating:

Make/Model:

Seasonality Profile:

Space-Heating System

Description: **Two Weil-McLain boilers supply hydronic space-heating system**

Fuel: **Natural Gas**

Rating: **Weil-McLain Boiler #1: 5,052 kBtu/hr gas input;**
Weil-McLain Boiler #2: 3,608 kBtu/hr gas input

Max water pressure: **@ 50psi**

Water supply Temp: **180 °F**

Water Return Temp: **160 °F**

Make/Model:

Thermal Storage (space?):

Seasonality Profile: **Required throughout the year**

CERL Distribution

Commander, Fort Richardson
ATTN: ATZS-EHE (2)

Chief of Engineers
ATTN: CEHEC-IM-LH (2)

Engineer Research and Development Center (Libraries)
ATTN: ERDC, Vicksburg, MS
ATTN: Cold Regions Research, Hanover, NH
ATTN: Topographic Engineering Center, Alexandria, VA

Defense Tech Info Center 22304
ATTN: DTIC-O

8
4/01

REPORT DOCUMENTATION PAGE

Form Approved
OMB No. 0704-0188

Public reporting burden for this collection of information is estimated to average 1 hour per response, including the time for reviewing instructions, searching existing data sources, gathering and maintaining the data needed, and completing and reviewing this collection of information. Send comments regarding this burden estimate or any other aspect of this collection of information, including suggestions for reducing this burden to Department of Defense, Washington Headquarters Services, Directorate for Information Operations and Reports (0704-0188), 1215 Jefferson Davis Highway, Suite 1204, Arlington, VA 22202-4302. Respondents should be aware that notwithstanding any other provision of law, no person shall be subject to any penalty for failing to comply with a collection of information if it does not display a currently valid OMB control number. PLEASE DO NOT RETURN YOUR FORM TO THE ABOVE ADDRESS.

1. REPORT DATE (DD-MM-YYYY)
04-2001

2. REPORT TYPE
Final

3. DATES COVERED (From - To)

4. TITLE AND SUBTITLE
Site Evaluation for Application of Fuel Cell Technology: Fort Richardson, AK

5a. CONTRACT NUMBER
88-94-D-0020

5b. GRANT NUMBER

5c. PROGRAM ELEMENT NUMBER

6. AUTHOR(S)
Michael J. Binder, Franklin H. Holcomb, and William R. Taylor

5d. PROJECT NUMBER
DACA

5e. TASK NUMBER

5f. WORK UNIT NUMBER

7. PERFORMING ORGANIZATION NAME(S) AND ADDRESS(ES)
U.S. Army Engineer Research and Development Center (ERDC)
Construction Engineering Research Laboratory (CERL)
P.O. Box 9005
Champaign, IL 61826-9005

8. PERFORMING ORGANIZATION REPORT NUMBER
ERDC/CERL TR-01-42

9. SPONSORING / MONITORING AGENCY NAME(S) AND ADDRESS(ES)
Fort Richardson
P.O. Box 5-549
Camp Denali
Fort Richardson, AK 99505

10. SPONSOR/MONITOR'S ACRONYM(S)

11. SPONSOR/MONITOR'S REPORT NUMBER(S)

12. DISTRIBUTION / AVAILABILITY STATEMENT
Approved for public release; distribution is unlimited.

13. SUPPLEMENTARY NOTES
Copies are available from the National Technical Information Service, 5285 Port Royal Road, Springfield, VA 22161.

14. ABSTRACT

Fuel cells are an environmentally clean, quiet, and a highly efficient method for generating electricity and heat from natural gas and other fuels. Researchers at the U.S. Army Engineer Research and Development Center (ERDC), Construction Engineering Research Laboratory (CERL) have actively participated in the development and application of advanced fuel cell technology since fiscal year 1993 (FY93). CERL has selected and evaluated application sites, supervised the design and installation of fuel cells, actively monitored the operation and maintenance of fuel cells, and compiled "lessons learned" for feedback to manufacturers for 29 of 30 commercially available fuel cell power plants and their thermal interfaces installed at Department of Defense (DoD) locations.

This report presents an overview of the information collected at Fort Richardson, AK, along with a conceptual fuel cell installation layout and description of potential benefits the technology can provide at that location. Similar summaries of the site evaluation surveys for the remaining 28 sites where CERL has managed and continues to monitor fuel cell installation and operation are available in the companion volumes to this report.

15. SUBJECT TERMS
fuel cells
energy conservation
fuel technology alternatives
Fort Richardson, AK

16. SECURITY CLASSIFICATION OF:			17. LIMITATION OF ABSTRACT	18. NUMBER OF PAGES	19a. NAME OF RESPONSIBLE PERSON
					Michael J. Binder
a. REPORT	b. ABSTRACT	c. THIS PAGE			19b. TELEPHONE NUMBER (include area code)
Unclassified	Unclassified	Unclassified	SAR	28	(217) 373-7214

Standard Form 298 (Rev. 8-98)
Prescribed by ANSI Std. 239.18