ERDC/CERL TR-01-23

Construction Engineering Research Laboratory

US Army Corps of Engineers®
Engineer Research and Development Center

Site Evaluation for Application of Fuel Cell Technology

Davis-Monthan Air Force Base, AZ

Michael J. Binder, Franklin H. Holcomb, and William R. Taylor

February 2001

20010423072

Approved for public release; distribution is unlimited.

Foreword

In fiscal years 93 and 94, Congress provided funds for natural gas utilization equipment, part of which was specifically designated for procurement of natural gas fuel cells for power generation at military installations. The purchase, installation, and ongoing monitoring of 30 fuel cells provided by these appropriations has come to be known as the "DoD Fuel Cell Demonstration Program." Additional funding was provided by: the Office of the Deputy Under Secretary of Defense for Industrial Affairs & Installations, ODUSD (IA&I)/HE&E; the Strategic Environmental Research & Development Program (SERDP); the Assistant Chief of Staff for Installation Management (ACSIM); the U.S. Army Center for Public Works (CPW); the Naval Facilities Engineering Service Center (NFESC); and Headquarters (HQ), Air Force Civil Engineer Support Agency (AFCESA).

The work was performed by the Energy Branch (CF-E), of the Facilities Division (CF), Construction Engineering Research Laboratory (CERL). The CERL Principal Investigator was Michael J. Binder. Part of this work was performed by Science Applications International Corp. (SAIC), under Contract DACA88-94-D-0020, task orders 0002, 0006, 0007, 0010, and 0012. The technical editor was William J. Wolfe, Information Technology Laboratory. Larry M. Windingland is Chief, CEERD-CF-E, and L. Michael Golish is Chief, CEERD-CF. The associated Technical Director was Gary W. Schanche, CEERD-CV-T. The Acting Director of CERL is William D. Goran.

CERL is an element of the U.S. Army Engineer Research and Development Center (ERDC), U.S. Army Corps of Engineers. The Director of ERDC is Dr. James R. Houston and the Commander is COL James S. Weller.

DISCLAIMER

The contents of this report are not to be used for advertising, publication, or promotional purposes. Citation of trade names does not constitute an official endorsement or approval of the use of such commercial products. All product names and trademarks cited are the property of their respective owners.

The findings of this report are not to be construed as an official Department of the Army position unless so designated by other authorized documents.

DESTROY THIS REPORT WHEN IT IS NO LONGER NEEDED. DO NOT RETURN IT TO THE ORIGINATOR.

Contents

Foreword 2

List of Figures and Tables 4

1 Introduction 5

Background 5
Objective 6
Approach 6
Units of Weight and Measure 7

2 Site and System Description 8

Site Description 8
Site Layout 8
Electrical System 10
Steam and Hot Water Systems 10
Space Heating System 10
Space Cooling System 10

3 Fuel Cell Description 12

Fuel Cell Location 12
Fuel Cell Interfaces 12

4 Economic Analysis 18

5 Conclusions and Recommendations 21

Appendix: Fuel Cell Site Evaluation Form 22

CERL Distribution 28

Report Documentation Page 29

List of Figures and Tables

Figures

1 Gymnasium site layout....9
2 Davis-Monthan AFB mechanical room layout....11
3 Davis-Monthan AFB Gymnasium fuel cell layout and interfaces....13
4 Fuel cell thermal interface....14
5 Estimated domestic hot water profile for a peak day....15

Tables

1 Companion ERDC/CERL site evaluation reports....7
2 Davis-Monthan AFB electricity consumption and costs....18
3 Davis-Monthan AFB natural gas consumption and costs....19
4 Economic savings of fuel cell installation....20

1 Introduction

Background

Fuel cells generate electricity through an electrochemical process that combines hydrogen and oxygen to generate direct current (DC) electricity. Fuel cells are an environmentally clean, quiet, and a highly efficient method for generating electricity and heat from natural gas and other fuels. Air emissions from fuel cells are so low that several Air Quality Management Districts in the United States have exempted fuel cells from requiring operating permits. Today's natural gas-fueled fuel cell power plants operate at electrical conversion efficiencies of 40 to 50 percent; these efficiencies are predicted to climb to 50 to 60 percent in the near future. In fact, if the heat from the fuel cell process is used in a cogeneration system, efficiencies can exceed 85 percent. By comparison, current conventional coal-based technologies operate at efficiencies of 33 to 35 percent.

Phosphoric Acid Fuel Cells (PAFCs) are in the initial stages of commercialization. While PAFCs are not now economically competitive with other more conventional energy production technologies, current cost projections predict that PAFC systems will become economically competitive within the next few years as market demand increases.

Fuel cell technology has been found suitable for a growing number of applications. The National Aeronautics and Space Administration (NASA) has used fuel cells for many years as the primary power source for space missions and currently uses fuel cells in the Space Shuttle program. Private corporations have recently been working on various approaches for developing fuel cells for stationary applications in the utility, industrial, and commercial markets. Researchers at the U.S. Army Engineer Research and Development Center (ERDC), Construction Engineering Research Laboratory (CERL) have actively participated in the development and application of advanced fuel cell technology since fiscal year 1993 (FY93). CERL has successfully executed several research and demonstration work units with a total funding of approximately $55M.

As of November 1997, 30 commercially available fuel cell power plants and their thermal interfaces have been installed at DoD installations by CERL. As a consequence, the Department of Defense (DoD) is the owner of the largest fleet of

fuel cells worldwide. CERL researchers have developed a methodology for selecting and evaluating application sites, have supervised the design and installation of fuel cells, and have actively monitored the operation and maintenance of fuel cells, and compiled "lessons learned" for feedback to manufacturers. This accumulated expertise and experience has enabled CERL to lead the advancement of fuel cell technology through major thrusts such as the DoD Fuel Cell Demonstration, the Climate Change Fuel Cell Program, research and development efforts aimed at fuel cell product improvement and cost reduction, and conferences and symposiums dedicated to the advancement of fuel cell technology and commercialization.

This report presents an overview of the information collected at Davis-Monthan Air Force Base (AFB) along with a conceptual fuel cell installation layout and description of potential benefits the technology can provide at that location. Similar summaries of the site evaluation surveys for the remaining 28 sites where CERL has managed and continues to monitor fuel cell installation and operation are available in the companion volumes to this report (Table 1).

Objective

The objective of this work was to evaluate Davis-Monthan Air Force Base as a potential location for a fuel cell application.

Approach

1. On 1-2 August 1996, USACERL and Science Applications International Corp. (SAIC) representatives visited Davis-Monthan Air Force Base (the Site) to investigate it as a potential location for a 200 kW fuel cell.
2. Additionally, a copy of the site evaluation form filled out at the Site is provided as an addendum to this report.
3. Date was collected from energy bills, site drawings, and by interviewing appropriate site personnel.

Table 1. Companion ERDC/CERL site evaluation reports.

Location	Report No.
Fort Bliss, TX	TR 01-13
Fort Eustis, VA	TR 00-17
Fort Huachuca, AZ	TR 00-14
Fort Richardson, AK	TR 00-Draft
Picatinny Arsenal, NJ	TR 00-24
Pine Bluff Arsenal, AR	TR 01-15
U.S. Army Soldier Systems Center, Natick, MA	TR 00-Draft
U.S. Military Academy, West Point, NY	TR 00-Draft
Watervliet Arsenal, Albany, NY	TR 00-Draft
911th Airlift Wing, Pittsburgh, PA	TR 00-18
934th Airlift Wing, Minneapolis, MN	TR 00-19
Barksdale Air Force Base (AFB), LA	TR 01-29
Davis-Monthan AFB, AZ	TR 00-23
Edwards AFB, CA	TR 00-Draft
Kirtland AFB, NM	TR 00-Draft
Laughlin AFB, TX	TR 00-Draft
Little Rock AFB, AR	TR 00-Draft
Nellis AFB, NV	TR 01-31
Westover Air Reserve Base (ARB), MA	TR 00-20
Construction Battalion Center (CBC), Port Hueneme, CA	TR 00-16
Naval Air Station Fallon, NV	TR 00-15
Naval Education Training Center, Newport, RI	TR 00-21
Naval Hospital, Marine Corps Base Camp Pendleton, CA	TR 00-Draft
Naval Hospital, Naval Air Station Jacksonville, FL	TR 01-30
Naval Oceanographic Office, John C. Stennis Space Center, MS	TR 01-3
Subase New London, Groton, CT	TR 00-Draft
U.S. Naval Academy, Annapolis, MD	TR 00-22
National Defense Center for Environmental Excellence (NDCEE), Johnstown, PA	TR 01-33
Naval Hospital, Marine Corps Air Ground Combat Center (MCAGCC), Twentynine Palms, CA	TR 01-32

Units of Weight and Measure

U.S. standard units of measure are used throughout this report. A table of conversion factors for Standard International (SI) units is provided below.

1 ft	=	0.305 m
1 mile	=	1.61 km
1 acre	=	0.405 ha
1 gal	=	3.78 L
°F	=	°C (X 1.8) + 32

2 Site and System Description

Site Description

Davis-Monthan Air Force Base (AFB) is located in Tucson, AZ. It is home to four of the six groups that comprise the 355th Wing. The four groups are the 355th Operations Group (~2,100 persons) , the 355th Logistics Group (~1,400 persons), the 355th Support Group (~1,500 persons) and the 355th Medical Group (~500 persons). In addition to the 355th Wing groups, there are several tenant organizations including the Aerospace Maintenance and Regeneration Center, the Defense Investigative Service, the 12th Air Force and others.

The ASHRAE design temperatures for the Site are 104 and 66 °F. Extreme temperatures range from 25 to 115 °F.

Two building applications were investigated for a 200 kW phosphoric acid fuel cell. The gymnasium building has thermal loads for the showers, laundry and sauna facilities. There is one boiler for domestic hot water which is tied to a 1,500-gal storage tank. A second boiler provides hot water for space heating. The dining hall facility has two steam boilers that supply hot water to the kitchen. Steam is generated at 240 °F. At this temperature, even with a high grade heat exchanger, the fuel cell cannot provide heat to the steam generator. Therefore, the only viable thermal loads for the fuel cell at the dining hall are to heat the cold water for the domestic hot water and to heat the condensate return. The gym is the primary focus of this report although the dining hall facility is briefly discussed also in the Fuel Cell Interfaces section.

Site Layout

The dining hall at Davis-Monthan AFB is designated as Building 4100 and the gymnasium as Building 2505. Figure 1 shows the site layout for the gym. The mechanical room is located in the southeast corner of the building. The chiller is located north of the aerobics room. The main gas line is located just outside the mechanical room. There is a 480 V transformer located in the chiller area. The building electrical transformer is located east of the mechanical room.

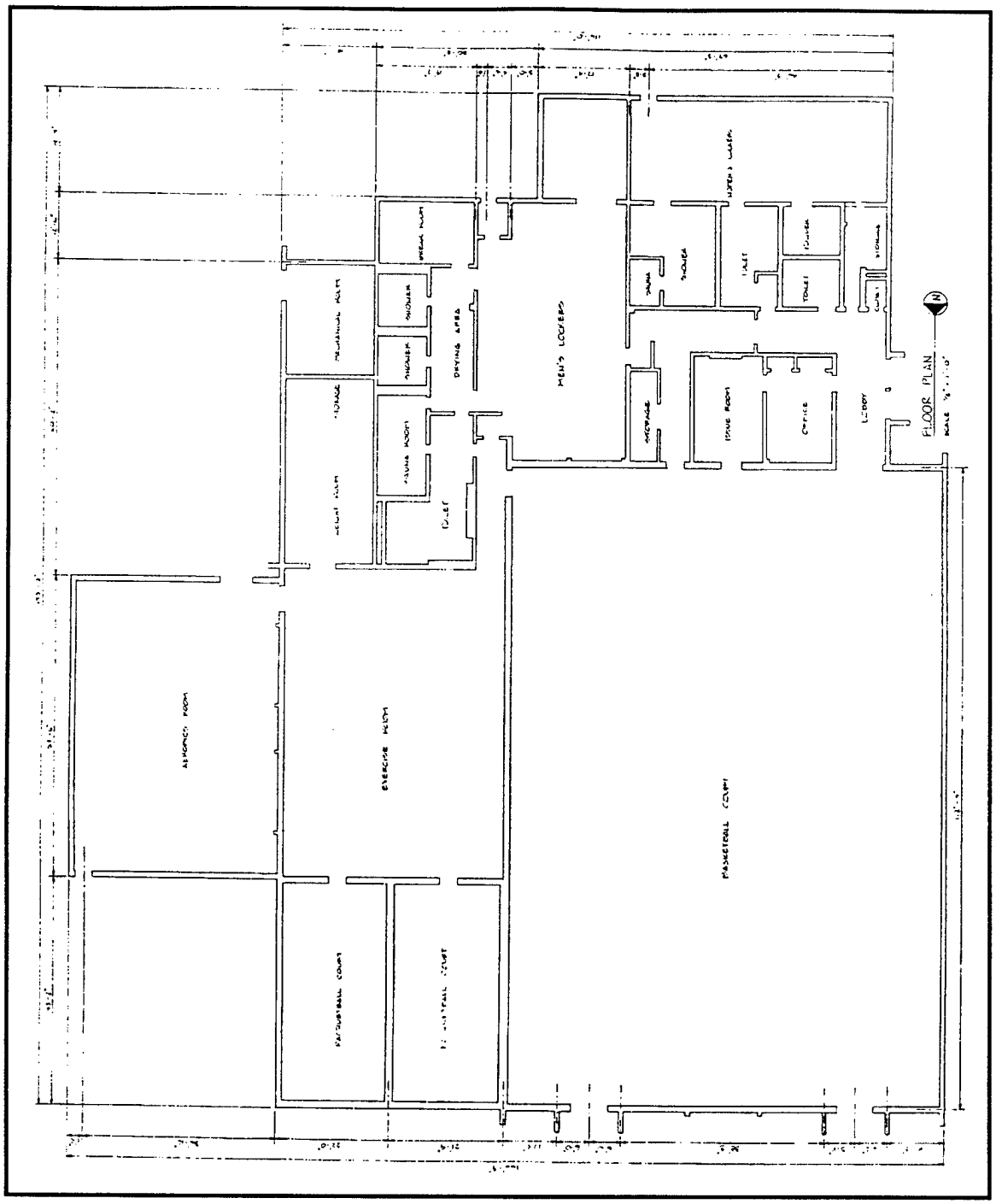

Figure 1. Gymnasium site layout.

Electrical System

The Base distributes electric power at 13,800 V. The gym has a 208/13,800 V transformer located outside the mechanical room. There is currently also a small (<150 kVA) 480/13,800 V transformer located near the building chiller.

Steam and Hot Water Systems

In the gym mechanical room is a 1.99 MBtu (million Btu) per hour Teledyne Laars natural gas driven boiler. The boiler supplies a 1,500-gal storage tank located inside the mechanical room which is used for domestic hot water (DHW). The storage tank provides hot water for showers and a washing machine. Figure 2 shows a layout of the mechanical room.

Space Heating System

There is a second boiler (same as hot water boiler) that provides space heating to the gym building. The two air handlers in the building are rated at 287,715 Btu/hour and 56,600 Btu/hour. Space heating is required between November and January

Space Cooling System

There is 60 ton Dunham-Bush screw compressor chiller at the gym. It is tied to the two air handler units in the building which have coils rated at 466,800 Btu/hour and 173,890 Btu/hour. The chillers operate February through October.

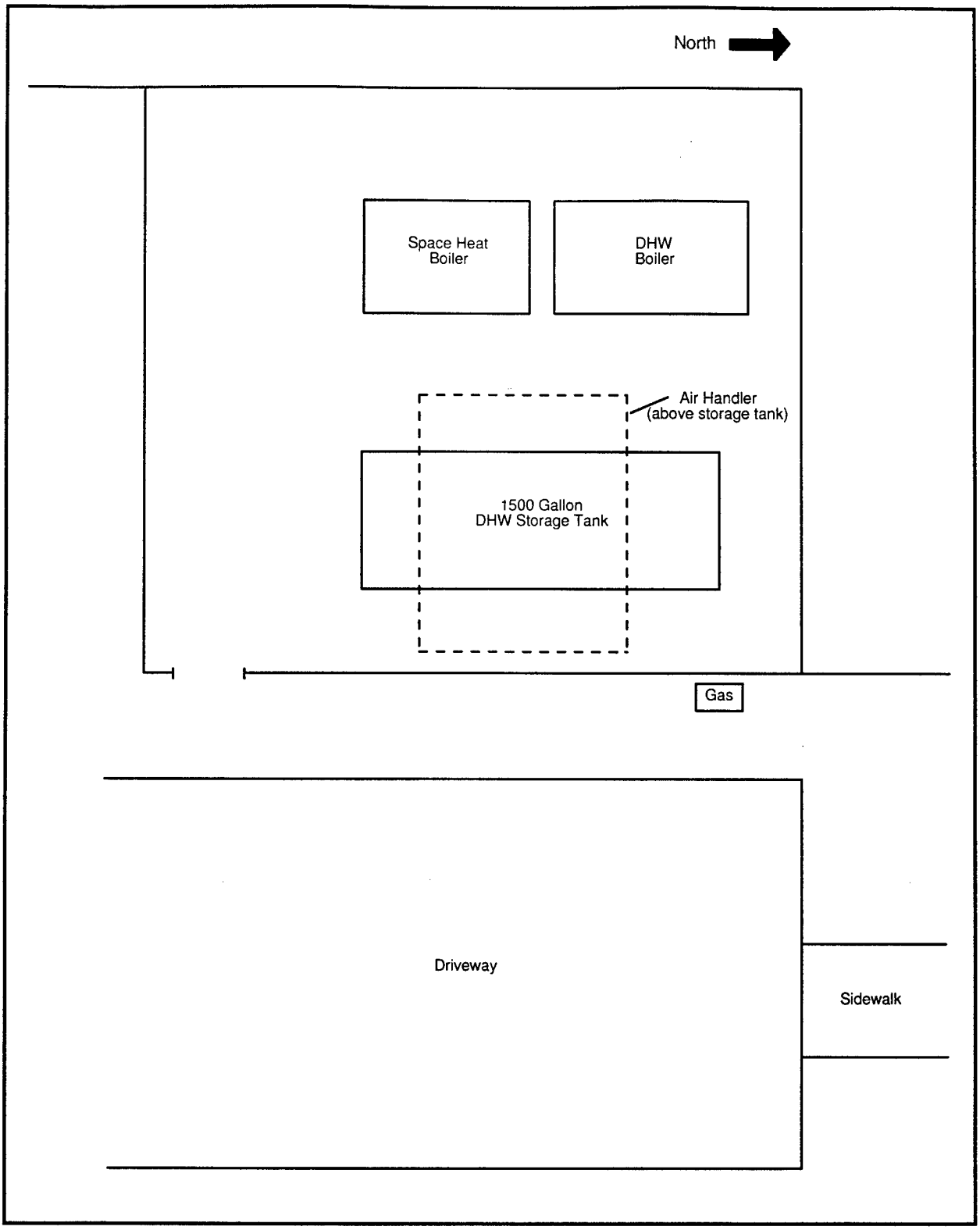

Figure 2. Davis-Monthan AFB mechanical room layout.

3 Fuel Cell Description

Fuel Cell Location

The fuel cell should be sited just outside the mechanical room across the driveway (Figure 3). A chain link fence or other type of barrier is required by Base personnel for security. The fuel cell should be oriented in a north-south direction with the thermal outlet facing towards the building. The cooling module can be positioned in an east-west direction on the north side of the fuel cell and the nitrogen tanks can be positioned in the north-east corner of the fenced in area. A new 480/13,800 V, 300 kVA transformer is required and can be located next to the building's existing transformer. A new absorption chiller which is proposed to serve as the interface for the fuel cell high grade heat exchanger option can be positioned in the north-west corner of the fenced in area.

The thermal piping from the fuel cell will be approximately 35 ft into the mechanical room and about 35 ft over to the absorption chiller. Natural gas should be tied into the main gas line (~40 ft). The make-up water can be taken from inside the building (30 ft). The electrical run will be approximately 25 ft over to the new transformer. The cooling module piping run is about 15 ft. The nitrogen piping run will be approximately 30 ft.

Fuel Cell Interfaces

The fuel cell electrical output will be fed into the Base electric grid. A new pad mounted 480/13,800 V, 300 kVA transformer will be required. The fuel cell will operate solely in the grid connected mode.

The fuel cell thermal output will be used to heat DHW for the gymnasium (primarily used for showers) and to provide heat to an absorption chiller. The fuel cell low grade heat exchanger will be used to heat the DHW and the high grade heat exchanger will be used to provide heat to the absorption chiller (Figure 4).

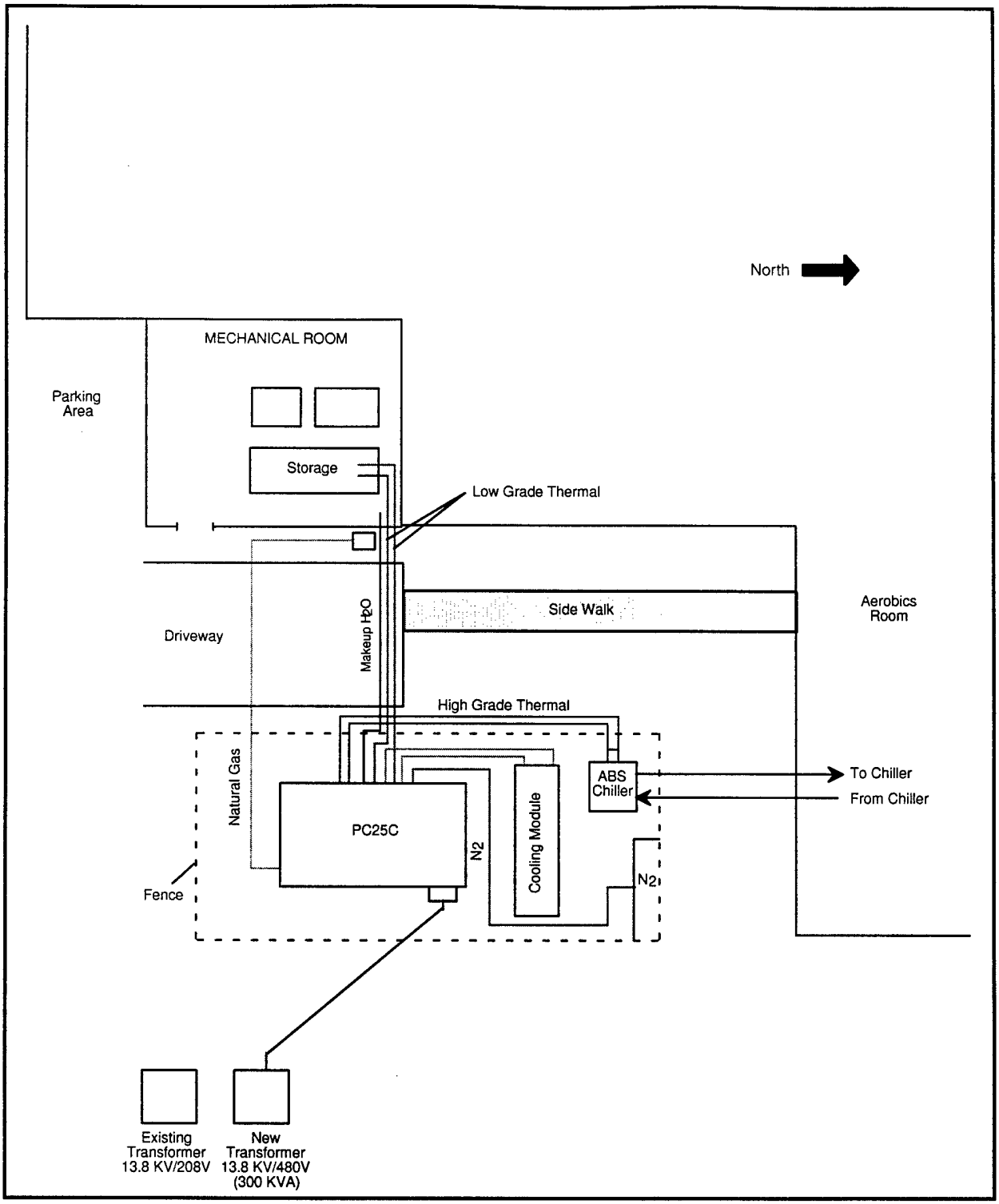

Figure 3. Davis-Monthan AFB Gymnasium fuel cell layout and interfaces.

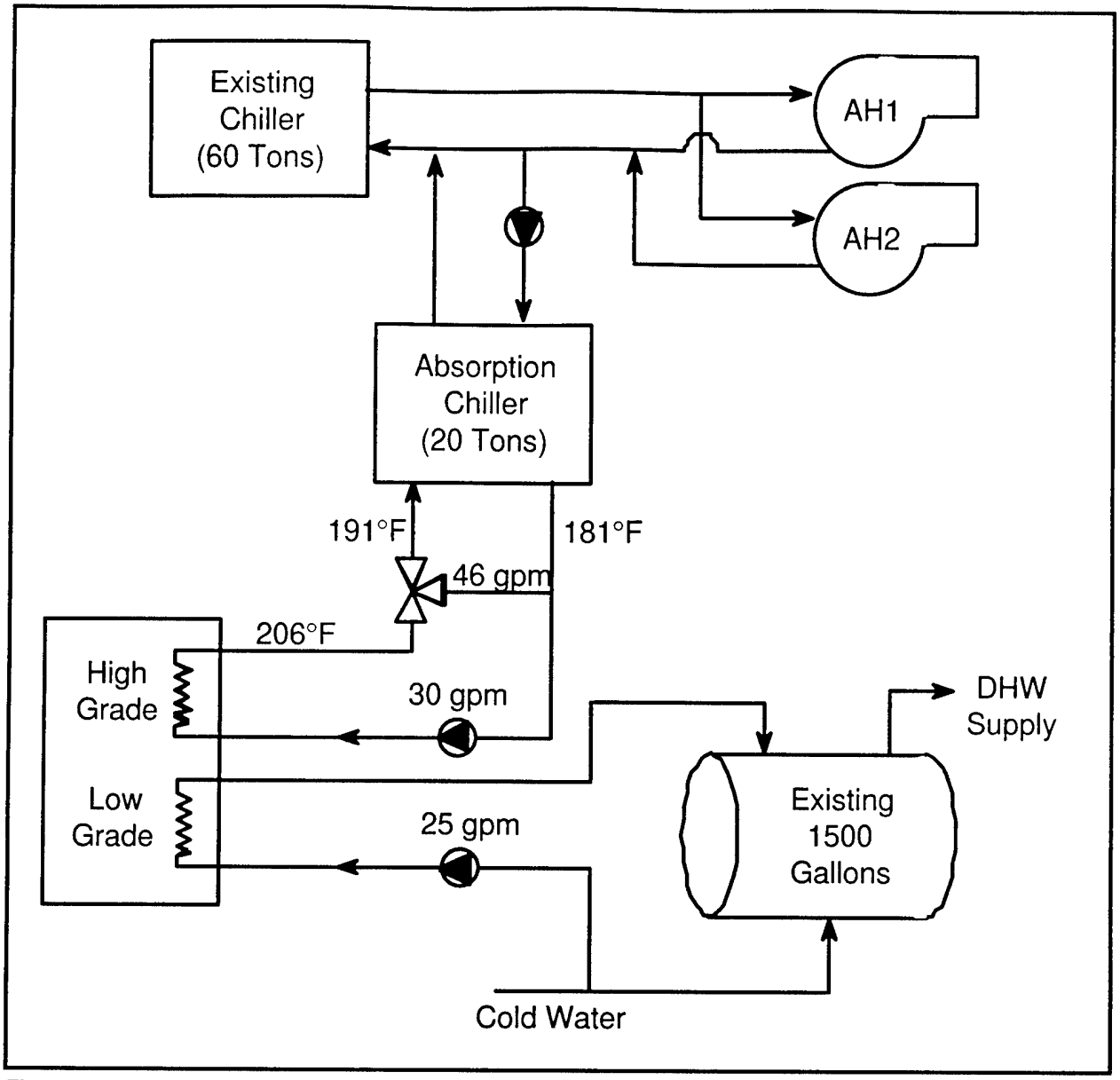

Figure 4. Fuel cell thermal interface.

The DHW load for the showers was estimated based on an average of 400 showers per day. This was estimated from discussions with Base personnel and observing the usage. ASHRAE estimates of 20 gal per shower at 110 °F were used. On this basis, assuming an inlet water temperature of 70 °F, the average daily DHW load is 111 kBtu/hr.

111 kBtu/hr = (400 showers/day * 20 gal/shower * 8.35 lbs/gal * (110 °F - 70 °F) * 0.001 kBtu/lb - °F) / 24 hrs/day.

The total estimated DHW load for a year is 972 MBtu.

972 MBtu/year = 111 kBtu/hr * 8,760 hrs/yr

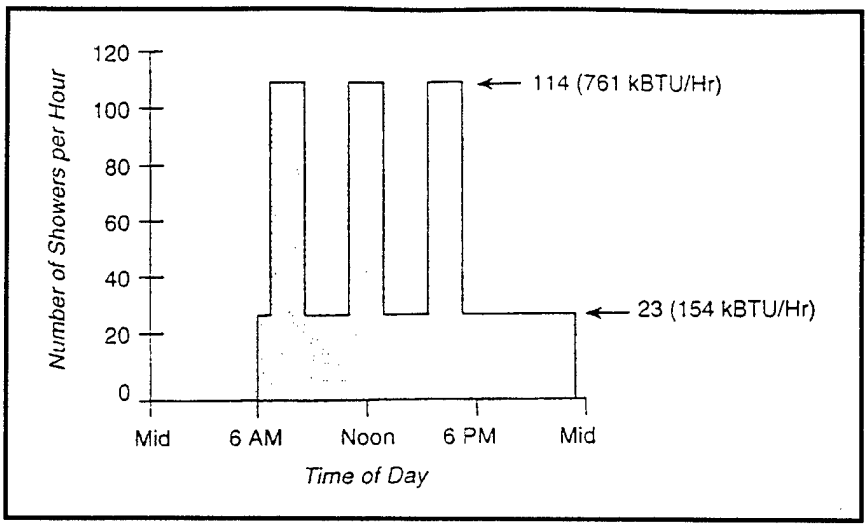

Figure 5. Estimated domestic hot water profile for a peak day.

The hot water storage requirements were determined from an estimated daily DHW profile for a peak day. Base personnel estimated the peak day shower usage was 800 showers per day. Hours of gym use are from 6 A.M. to 11 P.M.. It was estimated that there are three peak periods during the day ~ 6:30-8:00 A.M., ~11:00 A.M.-12:30 P.M., and ~ 4:00-5:30 P.M. and that the usage during the peak periods was 5 times that during the rest of the day (worst case). From these assumptions, the profile shown in Figure 5 was developed.

The heat required to raise the temperature of the 1,500-gal storage tank from 70 °F to 140 °F is 877 kBtu.

877 kBtu = 1,500 gal * 8.35 lb/gal, * (140 °F - 70 °F)*.001kBtu/lb - °F

Assuming the storage tank is fully charged at 6:30 A.M., the following peak day scenario would occur.

The first peak period requires 1,142 kBtu (761 kBtu/hr * 1.5 hr). Assuming a heat recovery rate of 320 kBtu/hr from the fuel cell low grade heat exchanger, the fuel cell will provide 480 kBtu (320 kBtu/hr * 1.5 hr) during this period. Thus, the storage tank will provide 662 kBtu (1,142 kBtu - 480 kBtu) during this period. At the end of the first peak period, the storage tank will contain 215 kBtu (877 kBtu - 662 kBtu).

Three hours later the second peak occurs. During this period the storage tank is charged by the fuel cell at the rate of 166 kBtu/hr (320 kBtu/hr - 154 kBtu/hr). Just prior to the second peak period the storage will be charged with 713 kBtu (215 kBtu + 166 kBtu/hr * 3 hr). During the second peak period the fuel cell will supply 480 kBtu (320 kBtu/hr * 1.5 hr) and the storage tank will supply 662

kBtu (1,142 kBtu - 480 kBtu). After the second peak period the storage tank will contain 51 kBtu (713 kBtu - 662 kBtu).

Three and one half hours later the third peak occurs. During this period the storage tank is charged with 581 kBtu = (166 kBtu/hr * 3.5 hrs). Just prior to the peak the storage tank will contain 632 kBtu = (51 kBtu + 581 kBtu). During the third peak period the fuel cell will supply 480 kBtu/hr and 662 kBtu is required from storage. On the worst case day the storage tank is only insufficient by 30 kBtu = (632 kBtu - 662 kBtu). Therefore, the existing 1,500-gal storage tank is adequate for the fuel cell to meet ~ 100% of the DHW requirement on the peak day.

The pump in the low grade heat loop should run whenever the fuel cell operates and the 1,500-gal storage tank temperature is below 140 °F.

The high grade heat exchanger will supply hot water to drive an absorption chiller. The high grade heat exchanger can supply ~380 kBtu/hr at 250 °F, which is a good match for a low temperature absorption chiller, such as a Yazaki. The fuel cell can supply enough heat to drive ~ 20 ton absorption chiller.

There are two options for interfacing the absorption chiller. One is to interface with air handler 2 (AH2) in the adjacent mechanical room. The other is to put the absorption chiller in series with the existing 60 ton chiller to "pre-chill" the return water. The advantage of interfacing with AH2 is a short piping run (~50' vs. 115'). The draw back is that the cooling coil in AH2 is rated at 173,890 Btu or 14.5 tons. Thus, not all of the 20 ton absorption capacity would be effectively used.

Pre-chilling the return water to the 60 ton chiller would allow the full capacity of the absorption unit to be used, but would require piping runs of ~ 115 ft. Pre-chilling the return water from both air handlers would ensure that the absorption chiller would be used whenever the building requires any cooling. This is the recommended interface.

The high grade heat flow rate and control strategy will depend on the specific requirements for the absorption chiller. The Yazaki chiller design hot side temperatures are 190 °F inlet and 181 °F outlet, at a design flow of 75.7 gpm. At these conditions, the fuel cell supply temperature would be ~191 °F.

191 °F = 380 kBtu/hr / (75.7 gpm * 60 min/hr * 8.35 lb/gal * 1 Btu/lb - °F) + 181 °F

This is sufficient for the Yazaki, but will create a pressure drop of ~18 psi across the fuel cell high grade heat exchanger. However, with a by pass, 30 gpm could flow through the fuel cell (at a pressure drop of ~3 psi) and 45.7 gpm could by pass and mix the inlet temperature back down to 191 °F as shown in Figure 5.

Based on historic weather data, it was estimated that the absorption chiller would provide 20 tons of cooling for 3,500 hours per year, or 70,000 ton-hrs. Using an estimated C.O.P. of 4.0 for the existing screw chiller, the absorption chiller would displace 61,529 kWh/yr.

61,529 kWh = (70,000 ton-hrs * 12,000 Btu/ton-hr) / (3,413 Btu/kWh * 4.0)

The dining hall was also examined as a potential fuel cell site. The only 480V service at the dining hall was for the chiller. This service was fed by a 125 kVA transformer. Thus a larger, 300 kVA, transformer would be required.

The thermal load at the dining hall was to heat the condensate return with the high grade heat exchanger and the DHW with the low grade heat exchanger. Previous Base studies show that the steam load (which heats the DHW and is used for cooking) was 350 - 500 kBtu/hr. However, the steam temperature is ~ 240 °F which precludes using fuel cell heat to produce steam. Therefore, the fuel cell can only heat the condensate return and the cold water for the DHW. Heating the condensate return from 114° to 250° only required ~ 42 kBtu/hr. The DHW load was estimated using an ASHRAE value for dining halls of 2.4 gal/meal at 87 kBtu/hr.

87 kBtu/hr = (1,500 meals * 2.4 gal/meal * 8.35 lb/gal * (140° - 70°) * .001 kBtu/ °F-lb) / 24 hr/day.

Heating the cold water for the DHW directly would reduce the steam load and the total fuel cell load was estimated to be less that 100 kBtu/hr making the gymnasium a better fuel cell site. The Engineering building was also examined as a potential site. Again, the high grade heat application could be an absorption chiller. No significant low grade heat thermal load was found to exist.

4 Economic Analysis

Davis-Monthan AFB purchases electricity from Tucson Electric under rate schedule 14. Rate 14 has a demand and energy charge. There is a ratchet on the demand charge equal to two-thirds of the maximum demand in the previous 11 months. Over the past 3 years, the ratchet has been applied in an average of 5 months per year. Table 2 lists the electricity costs for the Jul-95 to Jun-96 time period. The Site paid an average of $0.0723/kWh for this time period. Rate 14 has the following components:

- Demand Charge: $10.28/kW
- Energy Charge (May-Oct): $0.047457/kWh
- Energy Charge (Nov-Apr): $0.045080/kWh
- Applicable Taxes: ~5.14%

Natural gas is purchased on the spot market and transported by Southwest Gas. Table 3 lists natural gas consumption and costs for Davis-Monthan AFB for the Jul-95 to Jun-96 time period. The average rate paid by the Site was $2.56/MBtu for this period; however, there was a significant drop in prices around December which contributed to this low average.

Table 2. Davis-Monthan AFB electricity consumption and costs.

Date	KWH	Actual Demand	Billed Demand	Cost	$/KWH
Jul-95	9,220,240	18,832	18,832	$655,737	$0.0711
Aug-95	9,390,040	19,907	19,907	$675,598	$0.0719
Sep-95	9,740,280	18,831	18,831	$681,368	$0.0700
Oct-95	7,327,320	17,070	17,070	$543,154	$0.0741
Nov-95	6,234,040	12,055	13,278	$433,469	$0.0695
Dec-95	5,246,400	10,392	13,278	$387,903	$0.0739
Jan-96	5,134,160	10,623	13,278	$382,617	$0.0745
Feb-96	5,419,800	11,200	13,278	$396,052	$0.0731
Mar-96	5,680,600	11,609	13,278	$408,308	$0.0719
Apr-96	6,144,480	15,417	15,417	$457,407	$0.0744
May-96	7,806,720	17,269	17,269	$575,399	$0.0737
Jun-96	9,024,360	18,344	18,344	$647,774	$0.0718
Tot/Avg	86,368,440	15,129	16,005	$6,244,786	$0.0723

Table 3. Davis-Monthan AFB natural gas consumption and costs.

Date	Total MBtu	Cost	$/MBtu
Jul-95	8116	$36,355	$4.48
Aug-95	6,967	$29,489	$4.23
Sep-95	8,422	$33,931	$4.03
Oct-95	8,694	$34,653	$3.99
Nov-95	19,659	$59,404	$3.02
Dec-95	27,935	$55,228	$1.98
Jan-96	31,500	$73,454	$2.33
Feb-96	21,398	$35,905	$1.68
Mar-96	18,298	$42,770	$2.34
Apr-96	11,612	$25,027	$2.16
May-96	9,247	$18,398	$1.99
Jun-96	8,618	$17,357	$2.01
Tot/Avg	180,467	$461,972	$2.56

Electric savings from the fuel cell were calculated based on the fuel cell operating 90 percent of the year (1,576,800 kWh). Demand savings were calculated assuming that the energy bill for the Site would be reduced for the full 200 kW of the fuel cell in 7 months of the year. For the 5 ratchet months, the fuel cell would be able to take a credit of two-thirds of the 200 kW, since the Site peak would be reduced by 200 kW. The full demand savings and 90% capacity factor savings were estimated as follows:

Demand Charge:	200 kW * $10.28/kW * 7 months/yr = $14,392
	200 kW * $10.28/kW * 5 months/yr * 2/3 = $6,853
Energy Charge (May-Oct):	1,576,800 kWh * 6/12 mos. * $0.047457/kWh = $37,415
Energy Charge (Nov-Apr):	1,576,800 kWh * 6/12 mos. * $0.045080/kWh = $35,541
Applicable Taxes:	$94,201 * 5.14% = $4,842

Total Electric savings from the fuel cell = $99,043 ($0.063/kWh).

A total of 61,529 kWh could be displaced by the absorption chiller. Using the average fuel cell displaced electricity rate of 6.3 cents/kWh, this would generate $3,876 in displaced chilling from the absorption chiller.

It was estimated previously that the DHW load for the gym was 792 MBtu/yr. Assuming a displaced boiler efficiency of 70% and the fuel cell capacity factor of 90%, the fuel cell would displace 1,108 MBtu of natural gas per year:

1,108 MBtu = (792 MBtu * 90%) / 70% boiler efficiency

Because of the wide fluctuations in natural gas rates in the past year, an average historical rate would not be applicable to estimating fuel cell thermal savings. Based on negotiations with Southwest Gas, Base personnel estimated that $3.00/MBtu is a reasonable prediction of their natural gas rate in FY97. At $3.00/MBtu, the fuel cell will displace $3,324 in a year.

$3,324 = 1,108 MBtu/yr * $3.00/MBtu

The fuel cell will consume 14,949 MBtu per year based on an electrical efficiency of 36% HHV (higher heating value). Input natural gas cost for the fuel cell would be $44,847 at $3.00/MBtu.

Total net savings for the fuel cell are summarized below and in Table 4:

- Electricity Savings: $99,043
- Absorption Chiller Savings: $ 3,876
- Thermal Dhw Savings: $ 3,324
- Input Fuel Costs: ($44,847)
- Net Savings: $61,396

The net savings for just the DHW thermal case would be $57,520. For just the absorption chiller case, the net savings would be $58,702.

The analysis is a general overview of the potential savings from the fuel cell. For the first 3-5 years, ONSI will be responsible for the fuel cell maintenance. Maintenance costs are not reflected in this analysis, but could represent a significant impact on net energy savings. Since detailed load energy profiles were not available, net energy savings could vary depending on actual thermal and electrical utilization.

Table 4. Economic savings of fuel cell installation.

Case	ECF	TU	Displaced kWh	Displaced Gas (MBtu)	Electrical Savings	Thermal Savings	Nat. Gas Cost	Net Savings
DHW Only	90%	16%	1,576,800	1,108	$99,043	$3,324	$44,847	$57,520
Absorption Chiller Only	90%	49%	1,638,329	0	$102,919	$0	$44,847	$58,072
DHW and Abs. Chiller	90%	65%	1,638,329	1,108	$102,919	$3,324	$44,847	$61,396

Assumptions:

Natural Gas Rate: $3.00/Mbtu
Electricity Rate: Rate 14 see text
Fuel Cell Thermal Output: 700,000 Btu/hour
Fuel Cell Electrical Efficiency (HHV): 36%
Seasonal Boiler Efficiency: 70%
Absorption Chiller C.O.P.: 0.63
Screw Comp. Chiller C.O.P.: 4.0
ECF = Fuel cell electric capacity factor
TU = Thermal utilization

5 Conclusions and Recommendations

This study concludes that the gymnasium at Davis-Monthan AFB represents a good application for a 200 kW phosphoric acid fuel cell. This would be a unique application in that an absorption chiller would be interfaced to the fuel cell high grade heat exchanger. The chilled water from a 20 to 30 ton absorption chiller should be tied into the main return line of the existing Dunham-Bush 60 ton screw compressor. In this way, the entire output of the absorption chiller would be used prior to the work that would be performed by the existing chiller. The piping run would be ~115 ft, unless a closer main return tie in can be found. Using the absorption chiller requires the high grade heat exchanger option.

The fuel cell should be located in the open dirt area across the short driveway just outside the gym mechanical room. A new 480/13,800 V, 300 kVA transformer will need to be installed near the existing 208 V transformer. The DHW thermal interface is a relatively short piping run into the mechanical room. A fence should be placed around the fuel cell, however, the Site may choose to install a wall at its own expense.

Appendix: Fuel Cell Site Evaluation Form

Site Name: **Davis-Monthan Air Force Base** Contacts: **John Weleck**

Location: **Tucson, AZ**

1. Electric Utility: **Tucson Electric** Rate Schedule: **Rate 14**

2. Gas Utility: **Southwest Gas** Rate Schedule: **Spot Market**

3. Available Fuels: **Natural Gas, Fuel Oil #2 used outside of main base area**

4. Hours of Use and Percent Occupied: Gymnasium

Weekdays	5	Hrs.	17
Saturday	1	Hrs.	12
Sunday	1	Hrs.	12

5. Outdoor Temperature Range: **Design dry bulb temperatures: 66 °F to 102 °F**
   Extremes: **25 °F to 115 °F**

6. Environmental Issues: **The area is in attainment. No major issues**

7. Backup Power Need/Requirement: **43 facilities have some back-up power.**

8. Utility Interconnect/Power Quality Issues: **Utility grid is fairly reliable. Have some isolated power quality problems.**

9. On-site Personnel Capabilities: **Mechanical plant personnel.**

10. Access for Fuel Cell Installation: **Easy access from parking lot area.**

11. Daily Load Profile Availability: **No data available.**

12. Security: **Put in fence. The base may build a block wall.**

Site Layout

Facility Type: **Gymnasium**

Age: **30 years**

Construction: **Cement block**

Square Feet: **24,620 sq ft**

See Figure 2

Show:

electrical/thermal/gas/water interfaces and length of runs
drainage
building/fuel cell site dimensions
ground obstructions

Electrical System

Service Rating: **13,800 V distribution system on base.**
Gym has mostly 208 V power.
A 480 V transformer is sited near existing chiller.

Electrically Sensitive Equipment: **N/A.**

Largest Motors (hp, usage): **N/A**

Grid Independent Operation?: **Not Required.**

Steam/Hot Water System

Description: **Two Teledyne Laars boilers**

System Specifications: **1.999 MBtu, 157 sq. ft. surface area.**

Fuel Type: **Natural Gas**

Max Fuel Rate:

Storage Capacity/Type: **~1,500 gal**

Interface Pipe Size/Description: **1-in. copper city water line.**

End Use Description/Profile: **There are two boilers in the Gym. One is for domestic hot water and the other is for space heating.**

Space Cooling System

Description: **Dunham-Bush 60 Ton screw compressor chiller; Facility has two air handlers with chilled water coils rated at 173,890 Btu/hour and 466,800 Btu/hour.**

Air Conditioning Configuration:
Type:
Rating:
Make/Model:

Seasonality Profile:

Space Heating System

Description: **Teledyne Laars boiler supplies two air handlers in Gym building.**

Fuel: **Natural gas**

Rating:

Water supply Temp:

Water Return Temp:

Make/Model:

Thermal Storage (space?):**N/A**

Seasonality Profile:

CERL Distribution

Commander, Davis-Monthan Air Force Base
ATTN: 355 CES/CEOE (2)

Chief of Engineers
ATTN: CEHEC-IM-LH (2)

Engineer Research and Development Center (Libraries)
ATTN: ERDC, Vicksburg, MS
ATTN: Cold Regions Research, Hanover, NH
ATTN: Topographic Engineering Center, Alexandria, VA

Defense Tech Info Center 22304
ATTN: DTIC-O

8
1/01

REPORT DOCUMENTATION PAGE

Form Approved
OMB No. 0704-0188

Public reporting burden for this collection of information is estimated to average 1 hour per response, including the time for reviewing instructions, searching existing data sources, gathering and maintaining the data needed, and completing and reviewing this collection of information. Send comments regarding this burden estimate or any other aspect of this collection of information, including suggestions for reducing this burden to Department of Defense, Washington Headquarters Services, Directorate for Information Operations and Reports (0704-0188), 1215 Jefferson Davis Highway, Suite 1204, Arlington, VA 22202-4302. Respondents should be aware that notwithstanding any other provision of law, no person shall be subject to any penalty for failing to comply with a collection of information if it does not display a currently valid OMB control number. PLEASE DO NOT RETURN YOUR FORM TO THE ABOVE ADDRESS.

1. REPORT DATE (DD-MM-YYYY)
02-2001

2. REPORT TYPE
Final

3. DATES COVERED (From - To)

4. TITLE AND SUBTITLE
Site Evaluation for Application of Fuel Cell Technology:
Davis-Monthan Air Force Base, AZ

5a. CONTRACT NUMBER
88-94-D-0020

5b. GRANT NUMBER

5c. PROGRAM ELEMENT NUMBER

6. AUTHOR(S)
Michael J. Binder, Franklin H. Holcomb, and William R. Taylor

5d. PROJECT NUMBER
DACA

5e. TASK NUMBER

5f. WORK UNIT NUMBER

7. PERFORMING ORGANIZATION NAME(S) AND ADDRESS(ES)
U.S. Army Engineer Research and Development Center (ERDC)
Construction Engineering Research Laboratory (CERL)
P.O. Box 9005
Champaign, IL 61826-9005

8. PERFORMING ORGANIZATION REPORT NUMBER
ERDC/CERL TR-01-23

9. SPONSORING / MONITORING AGENCY NAME(S) AND ADDRESS(ES)
Davis-Monthan Air Force Base
3791 S. Third St.
Tucson, AZ 85707

10. SPONSOR/MONITOR'S ACRONYM(S)
355 CES/CEOE

11. SPONSOR/MONITOR'S REPORT NUMBER(S)

12. DISTRIBUTION / AVAILABILITY STATEMENT
Approved for public release; distribution is unlimited.

13. SUPPLEMENTARY NOTES
Copies are available from the National Technical Information Service, 5285 Port Royal Road, Springfield, VA 22161.

14. ABSTRACT

Fuel cells are an environmentally clean, quiet, and a highly efficient method for generating electricity and heat from natural gas and other fuels. Researchers at the U.S. Army Engineer Research and Development Center (ERDC), Construction Engineering Research Laboratory (CERL) have actively participated in the development and application of advanced fuel cell technology since fiscal year 1993 (FY93). CERL selected and evaluated application sites, supervised the design and installation of fuel cells, actively monitored the operation and maintenance of fuel cells, and compiled "lessons learned" for feedback to manufacturers for 29 of 30 commercially available fuel cell power plants and their thermal interfaces installed at Department of Defense (DoD) locations.

This report presents an overview of the information collected at Davis-Monthan Air Force Base, AZ, along with a conceptual fuel cell installation layout and description of potential benefits the technology can provide at that location. Similar summaries of the site evaluation surveys for the remaining 28 sites where CERL has managed and continues to monitor fuel cell installation and operation are available in the companion volumes to this report.

15. SUBJECT TERMS
energy conservation
fuel cells
energy technology alternatives
Davis-Monthan Air Force Base, AZ

16. SECURITY CLASSIFICATION OF:			17. LIMITATION OF ABSTRACT	18. NUMBER OF PAGES	19a. NAME OF RESPONSIBLE PERSON
					Michael J. Binder
a. REPORT	b. ABSTRACT	c. THIS PAGE			19b. TELEPHONE NUMBER (include area code)
Unclassified	Unclassified	Unclassified	SAR	30	(217) 373-7214

Standard Form 298 (Rev. 8-98)
Prescribed by ANSI Std. 239.18