US Army Corps of Engineers®
Engineer Research and Development Center

Site Evaluation for Application of Fuel Cell Technology

Fort Eustis, VA

Michael J. Binder, Franklin H. Holcomb, and William R. Taylor

February 2001

20010423 076

Approved for public release; distribution is unlimited.

ERDC/CERL TR-01-17

Construction Engineering Research Laboratory

US Army Corps of Engineers®
Engineer Research and Development Center

Site Evaluation for Application of Fuel Cell Technology

Fort Eustis, VA

Michael J. Binder, Franklin H. Holcomb, and William R. Taylor

February 2001

Approved for public release; distribution is unlimited.

Foreword

In fiscal years 93 and 94, Congress provided funds for natural gas utilization equipment, part of which was specifically designated for procurement of natural gas fuel cells for power generation at military installations. The purchase, installation, and ongoing monitoring of 30 fuel cells provided by these appropriations has come to be known as the "DoD Fuel Cell Demonstration Program." Additional funding was provided by: the Office of the Deputy Under Secretary of Defense for Industrial Affairs & Installations, ODUSD (IA&I)/HE&E; the Strategic Environmental Research & Development Program (SERDP); the Assistant Chief of Staff for Installation Management (ACSIM); the U.S. Army Center for Public Works (CPW); the Naval Facilities Engineering Service Center (NFESC); and Headquarters (HQ), Air Force Civil Engineer Support Agency (AFCESA).

This report documents work done at Fort Eustis, Newport News, VA. Special thanks is owed to the Fort Eustis point of contact (POC), Daniel Wood, for providing investigators with access to needed information for this work. The work was performed by the Energy Branch (CF-E), of the Facilities Division (CF), Construction Engineering Research Laboratory (CERL). The CERL Principal Investigator was Michael J. Binder. Part of this work was performed by Science Applications International Corp. (SAIC), under Contract DACA88-94-D-0020, task orders 0002, 0006, 0007, 0010, and 0012. The technical editor was William J. Wolfe, Information Technology Laboratory. Larry M. Windingland is Chief, CEERD-CF-E, and L. Michael Golish is Chief, CEERD-CF. The associated Technical Director was Gary W. Schanche. The Acting Director of CERL is William D. Goran.

CERL is an element of the U.S. Army Engineer Research and Development Center (ERDC), U.S. Army Corps of Engineers. The Director of ERDC is Dr. James R. Houston and the Commander is COL James S. Weller.

DISCLAIMER

The contents of this report are not to be used for advertising, publication, or promotional purposes. Citation of trade names does not constitute an official endorsement or approval of the use of such commercial products. All product names and trademarks cited are the property of their respective owners.

The findings of this report are not to be construed as an official Department of the Army position unless so designated by other authorized documents.

DESTROY THIS REPORT WHEN IT IS NO LONGER NEEDED. DO NOT RETURN IT TO THE ORIGINATOR.

Contents

Foreword 2

List of Figures and Tables 4

1 Introduction 5

Background 5
Objective 6
Approach 6
Units of Weight and Measure 7

2 Site Description 8

Site Layout 8
Electrical System 8
Steam/Hot Water System 9
Space Heating System 10
Space Cooling System 10
Fuel Cell Location 10
Fuel Cell Interfaces 10
Economic Analysis 14

3 Conclusions and Recommendations 18

Appendix: Fuel Cell Site Evaluation Form 19

CERL Distribution 26

Report Documentation Page 27

List of Figures and Tables

Figures

1 Fort Eustis field house site layout 9
2 Fort Eustis fuel cell location 11
3 Fort Eustis fuel cell layout and interfaces 11
4 Pool heat — fuel cell thermal interface 12
5 Fuel cell thermal interface — pool heater and DHW 13

Tables

1 Companion ERDC/CERL site evaluation reports 7
2 Methods used to calculate pool heat load 12
3 Fort Eustis electric billing data 14
4 Fort Eustis natural gas billing data 15
5 Economic savings of fuel cell design alternatives at Fort Eustis 16

1 Introduction

Background

Fuel cells generate electricity through an electrochemical process that combines hydrogen and oxygen to generate direct current (DC) electricity. Fuel cells are an environmentally clean, quiet, and a highly efficient method for generating electricity and heat from natural gas and other fuels. Air emissions from fuel cells are so low that several Air Quality Management Districts in the United States have exempted fuel cells from requiring operating permits. Today's natural gas-fueled fuel cell power plants operate at electrical conversion efficiencies of 40 to 50 percent; these efficiencies are predicted to climb to 50 to 60 percent in the near future. In fact, if the heat from the fuel cell process is used in a cogeneration system, efficiencies can exceed 85 percent. By comparison, current conventional coal-based technologies operate at efficiencies of 33 to 35 percent.

Phosphoric Acid Fuel Cells (PAFCs) are in the initial stages of commercialization. While PAFCs are not now economically competitive with other more conventional energy production technologies, current cost projections predict that PAFC systems will become economically competitive within the next few years as market demand increases.

Fuel cell technology has been found suitable for a growing number of applications. The National Aeronautics and Space Administration (NASA) has used fuel cells for many years as the primary power source for space missions and currently uses fuel cells in the Space Shuttle program. Private corporations have recently been working on various approaches for developing fuel cells for stationary applications in the utility, industrial, and commercial markets. Researchers at the U.S. Army Construction Engineering Research Laboratory (CERL) have actively participated in the development and application of advanced fuel cell technology since fiscal year 1993 (FY93). CERL has successfully executed several research and demonstration work units with a total funding of approximately $55M.

As of November 1997, 30 commercially available fuel cell power plants and their thermal interfaces have been installed at DoD locations, CERL managed 29 of these installations. As a consequence, the Department of Defense (DoD) is the

owner of the largest fleet of fuel cells worldwide. CERL researchers have developed a methodology for selecting and evaluating application sites, have supervised the design and installation of fuel cells, and have actively monitored the operation and maintenance of fuel cells, and compiled "lessons learned" for feedback to manufacturers. This accumulated expertise and experience has enabled CERL to lead in the advancement of fuel cell technology through major efforts such as the DoD Fuel Cell Demonstration Program, the Climate Change Fuel Cell Program, research and development efforts aimed at fuel cell product improvement and cost reduction, and conferences and symposiums dedicated to the advancement of fuel cell technology and commercialization.

This report presents an overview of the information collected at Fort Eustis, Newport News, VA along with a conceptual fuel cell installation layout and description of potential benefits the technology can provide at that location. Similar summaries of the site evaluation surveys for the remaining 28 sites where CERL has managed and continues to monitor fuel cell installation and operation are available in the companion volumes to this report (see Table 1).

Objective

The objective of this work was to evaluate Fort Eustis as a potential location for a fuel cell application.

Approach

On 22 and 23 February 1995, Science Applications International Corporation (SAIC) visited Fort Eustis (the site) located in Newport News, VA to investigate it as a potential location for a 200 kW phosphoric acid fuel cell. This report presents an overview of information collected at the site along with a conceptual fuel cell installation layout and description of potential benefits. The Appendix to this report contains a copy of the site evaluation form filled out at the site.

Table 1. Companion ERDC/CERL site evaluation reports.

Location	Report No.
Fort Bliss, TX	TR 01-13
Fort Eustis, VA	TR 00-17
Fort Huachuca, AZ	TR 00-14
Fort Richardson, AK	TR 00-Draft
Picatinny Arsenal, NJ	TR 00-24
Pine Bluff Arsenal, AR	TR 01-15
U.S. Army Soldier Systems Center, Natick, MA	TR 00-Draft
U.S. Military Academy, West Point, NY	TR 00-Draft
Watervliet Arsenal, Albany, NY	TR 00-Draft
911th Airlift Wing, Pittsburgh, PA	TR 00-18
934th Airlift Wing, Minneapolis, MN	TR 00-19
Barksdale Air Force Base (AFB), LA	TR 01-29
Davis-Monthan AFB, AZ	TR 00-23
Edwards AFB, CA	TR 00-Draft
Kirtland AFB, NM	TR 00-Draft
Laughlin AFB, TX	TR 00-Draft
Little Rock AFB, AR	TR 00-Draft
Nellis AFB, NV	TR 01-31
Westover Air Reserve Base (ARB), MA	TR 00-20
Construction Battalion Center (CBC), Port Hueneme, CA	TR 00-16
Naval Air Station Fallon, NV	TR 00-15
Naval Education Training Center, Newport, RI	TR 00-21
Naval Hospital, Marine Corps Base Camp Pendleton, CA	TR 00-Draft
Naval Hospital, Naval Air Station Jacksonville, FL	TR 01-30
Naval Oceanographic Office, John C. Stennis Space Center, MS	TR 01-3
Subase New London, Groton, CT	TR 00-Draft
U.S. Naval Academy, Annapolis, MD	TR 00-22
National Defense Center for Environmental Excellence (NDCEE), Johnstown, PA	TR 01-33
Naval Hospital, Marine Corps Air Ground Combat Center (MCAGCC), Twentynine Palms, CA	TR 01-32

Units of Weight and Measure

U.S. standard units of measure are used throughout this report. A table of conversion factors for Standard International (SI) units is provided below.

1 ft	=	0.305 m
1 mile	=	1.61 km
1 acre	=	0.405 ha
1 gal	=	3.78 L
°F	=	°C (X 1.8) + 32

2 Site Description

Fort Eustis is located in Newport News, VA. The site supports various transportation training functions and contains the Military Transportation Museum. Temperatures at the site range from the 20s to over 90 °F. Historical weather data shows an average of 3,495 heating degree days and 1,422 cooling degree days per year. The site suggested the Field House as the location for the 200 kW fuel cell. The Field House comprises 48,000 sq ft and contains an indoor swimming pool, gymnasium, weight room, locker rooms, and shower facilities. The facility is open 17 hours per day (5 a.m. to 10 p.m.), 7 days per week. No energy usage data was available specifically for the Field House. An electric meter in the mechanical room showed that the peak load for the building is 136 kW. The electric load at the time of our site visit was 48 kW. The 200 kW fuel cell electric output will need to be fed into the site's electric grid to use the full generating capacity of the fuel cell.

The principal thermal loads in the building include water heating for showers, pool heating and space heating. The building generates hot water from heat exchangers off the central steam distribution loop. There is a 5-ft diameter x 14-ft horizontal hot water storage tank (about 2,000 gal) with internal heat exchanger in the mechanical room. There are two additional steam heat exchangers; one for heating the pool and the other for space heating.

Site Layout

Figure 1 shows the facility layout for the Field House. The pool and mechanical rooms are located on the north end of the building. Also on the north side of the Field House is the electric transformer for the facility located on a power pole. The steam distribution line that provides heating for the building parallels the east side of the Field House.

Electrical System

The Field House is supplied by a 13,200/208 volt transformer (150 kVA) which is located about 50 ft north of the mechanical room entrance up on the power pole. The electrical switch gear is located inside the mechanical room on the west wall.

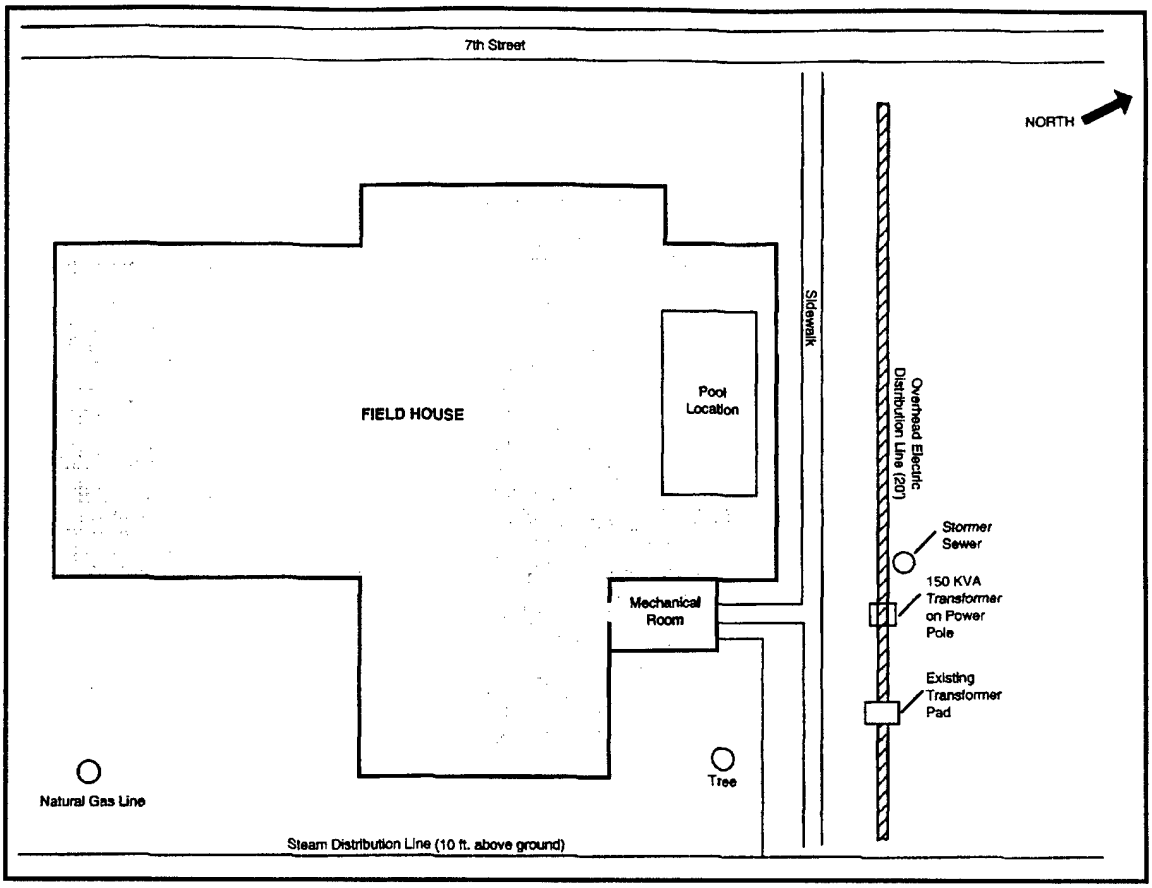

Figure 1. Fort Eustis field house site layout.

Since there is no 480 volt service to the building, a new transformer will have to be obtained. The base has tentatively agreed to move an existing spare transformer to the Field House for connecting the fuel cell to the Base utility grid, as well as doing all high voltage design and hook-ups (any additional equipment required will be supplied by ONSI).

Steam/Hot Water System

The Field House receives steam from a nearby energy plant. The building has a heat exchanger for supplying hot water to the pool. Water from the pool is circulated through two filters and then run through the heat exchanger. The return temperature from the pool is about 80-82 °F and the supply temperature is estimated at 90 °F. The pump is rated at 350 gpm @ 50-ft head.

The DHW system is supplied by a 5-ft diameter x 14-ft horizontal hot water storage tank (about 2,000 gal) with internal heat exchanger.

Space Heating System

Space heating comes from a separate heat exchanger off the steam supply system. Heating is normally required mid-October through mid-April.

Space Cooling System

There are no absorption chillers on the steam system.

Fuel Cell Location

The proposed location for the fuel cell is the grass area next to the Field House mechanical room. Figure 2 presents the location of the proposed fuel cell site and Figure 3 shows a detail of the proposed thermal and electric runs. The horizontal distance of the thermal piping run is approximately 20 ft (8 ft to the building and 10-12 ft to the heat exchanger). The actual piping distance will depend on whether overhead or floor level routing is used. The electric connection will require a wiring run of approximately 100 ft to the new transformer if it is sited at the existing transformer pad. The natural gas will have to be brought in from an existing site gas line, along the east side of the building and then up to the fuel cell. The new gas line will be approximately 250 ft up to the fuel cell.

Fuel Cell Interfaces

The Field House operates on 208 volt power and there is no 480 volt service nearby. Therefore, a 13,200/480 volt transformer (300 kVA or larger) must be added to accommodate the fuel cell. The site has agreed to supply one transformer for interconnecting the fuel cell to the base grid. The site is also interested in using the fuel cell as an emergency power source during extended utility grid outages. They envision using the Field House as an emergency shelter. This adds significant public relations value to this application. To use the grid isolated/emergency power capability of the fuel cell, a second 480/208 volt (300 kVA) transformer would be needed for automated switching.

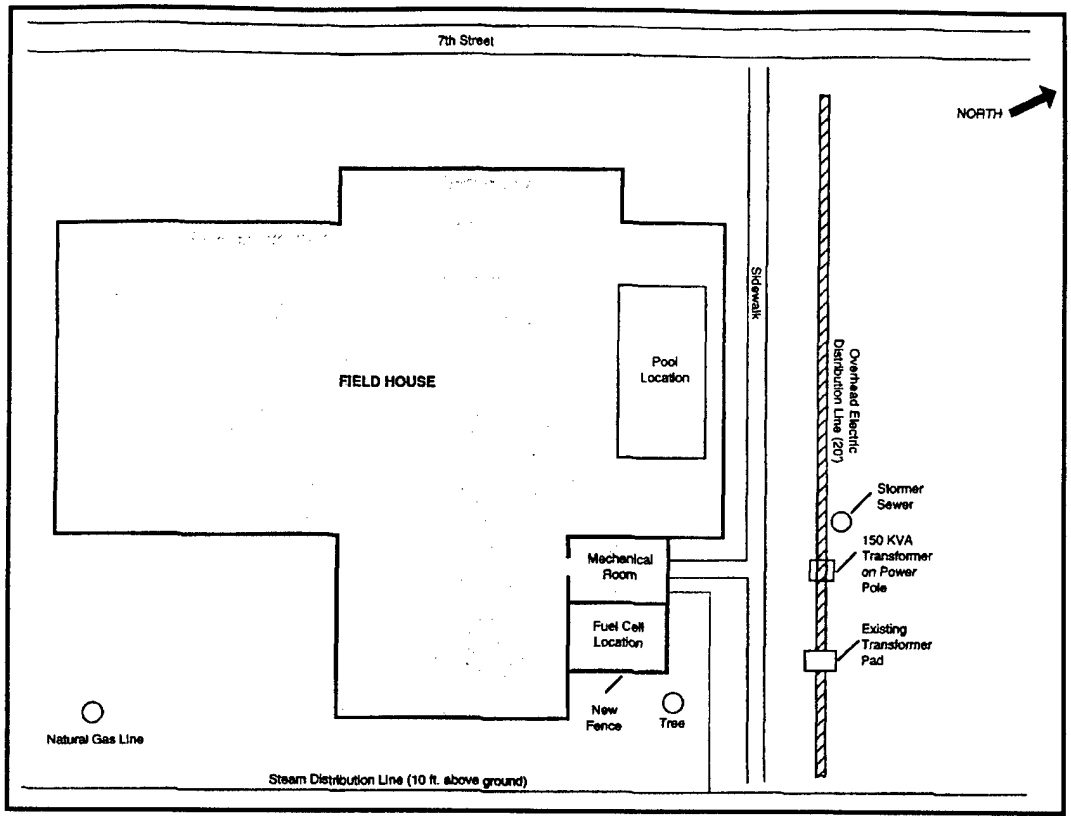

Figure 2. Fort Eustis fuel cell location.

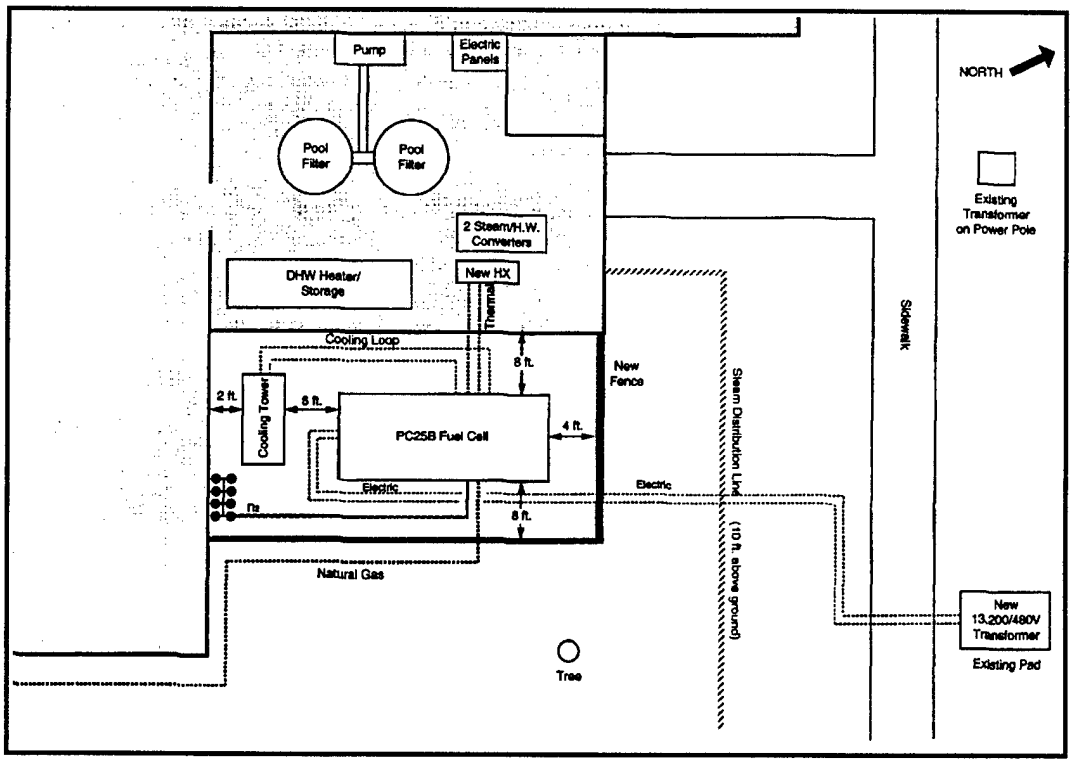

Figure 3. Fort Eustis fuel cell layout and interfaces.

Two thermal interfaces for the fuel cell were evaluated. One is to heat the swimming pool and the other is to heat the domestic hot water (DHW) for showers, etc. To interface with the pool, a separate heat exchanger would be required to protect the fuel cell heat exchanger (HEX 880) from possible corrosion effects of the chlorine. ONSI has a titanium plate heat exchanger which could be used for this purpose. The proposed pool interface is shown schematically in Figure 4. The heat load for the pool was calculated using ASHRAE methods listed in Table 2.

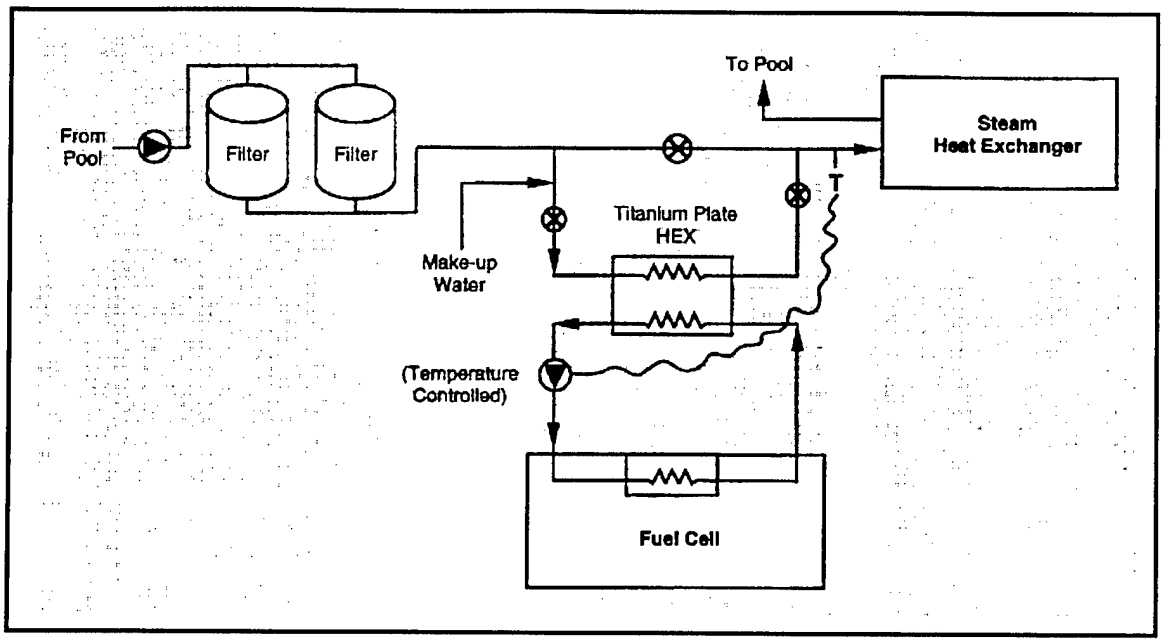

Figure 4. Pool heat — fuel cell thermal interface.

Table 2. Methods used to calculate pool heat load.

Temperature	Summer	Winter
Indoor Air Temperature	85 °F	75 °F
Indoor Air Relative Humidity	80%	60%
Pool Water Temperature	85 °F	85 °F
Evaporative Loss: Water Evaporation = 0.1(pool surface area)(vapor press., H_2O - vapor press., air) Summer = 0.1 * 5,760 sq ft * (1.227 in. Hg - 0.982 in. Hg) = 141 lb/hour = 141 lb/hour * 1 kBtu/lb. = 141 kBtu/hour Winter = 0.1 * 5,760 sq ft * (1.227 in. Hg - 0.5314 in. Hg) = 400 lb/hour = 400 lb/hour * 1 kBtu/lb = 400 kBtu/hour		
Convective/Radiation Loss: Heat Loss = 10.5 * (pool surface area) * (water temp - air temp) Summer = 10.5 * 5,760 sq ft * (85 °F – 85 °F) = 0 Winter = 10.5 * 5,760 sq ft * (85 °F – 75 °F) = 604.8 kBtu/hour		

It was assumed that the winter months were mid-October through mid-April (6 months). Thus, the fuel cell thermal utilization is:

$$\frac{(141\ \text{kBtu/hour} * 6\ \text{mos.}) + (700\ \text{kBtu/hour} * 6\ \text{mos.})}{700\text{kBtu/hour} * 12\ \text{months}} = 60\%$$

As a check on this calculation, pool heating data measured previously at an indoor pool in Worcester, PA was examined. The pool was 200,000 gal and maintained at 90 °F. The average heating load was 199 kBtu/hour. Scaling this up by the volume of the Field House pool yields an estimate of 274 kBtu/hour (199 kBtu/hour * 275,0000/200,000 gal). This is 52 percent less than the 573 kBtu/hour annual average estimated from the ASHRAE calculation. Thermal utilization for this estimate is 39 percent (274 kBtu/hour / 700 kBtu/hour).

Since the pool load would use from 39 to 60 percent of the fuel cell's thermal output based on the above estimates, a second thermal interface was examined. Figure 5 shows the thermal interface for adding the DHW load to the thermal loop. To interface with the DHW load, a double wall heat exchanger and circulating pump would be required. The existing DHW storage tank would be used.

The measured non-pool water usage at the Field House was 330 gal/hour for measurements taken in January 1995. In calculating the thermal requirement, it was assumed that 50 percent of this water was heated. The estimated DHW load is:

$$(330\ \text{gph}/2) * (8.35\ \text{lb/gal}) * (140\ °\text{F} - 60\ °\text{F}) = 110\ \text{kBtu/hour}$$

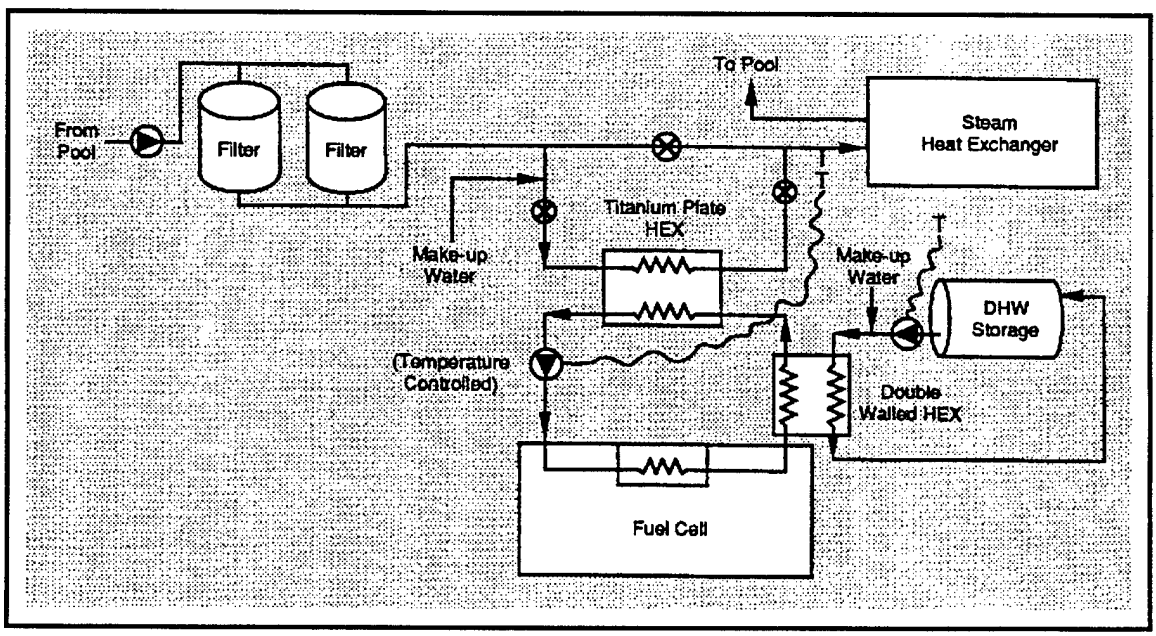

Figure 5. Fuel cell thermal interface — pool heater and DHW.

The DHW load would increase fuel cell thermal utilization during the 6 summer months. Adding the DHW load to the thermal interface would increase the annual thermal utilization by about 8 percent overall (110 / 700 kBtu/hour * 6/12 months).

Economic Analysis

The site is located in Virginia Power's service territory. Electric billing data were obtained for October 1993 through September 1994 and are shown in Table 3. The average rate ranged from 4.27 cents/kWh in July to 5.27 cents/kWh in May. The average electric rate paid by the site during this period was 4.76 cents/kWh. The site is billed under rate schedule MS.

The site is billed $12.62 per kW of peak demand and 1.98 cents per kWh consumed. Rate schedule MS has a demand ratchet of 90 percent of the greatest demand in the previous 11 months. The ratcheted peak demand was higher than the site's actual demand in 6 of the 12 previous months (December through May). The site purchases natural gas from Virginia Natural Gas under a number of different firm and interruptible rate schedules. Table 4 presents the natural gas consumption and costs for the three main rate schedules.

Table 3. Fort Eustis electric billing data.

Month	Actual Demand (kW)	Billed Demand (kW)	Energy (kWh)	Demand Charge	Energy Charge	Cost Adjustment	Total Cost	Average Cost/kWh
Oct.-93	17,532	17532	7168,000	$221,735	$141,066	($13,294)	$349,507	$0.0488
Nov-93	16,928	16,928	6,137,600	$199,840	$120,787	($11,593)	$309,034	$0.0504
Dec-93	13,923	16,928	6,787,200	$214,114	$133,572	($13,541)	$334,145	$0.0492
Jan-94	15,718	16,928	7,795,200	$235,526	$153,409	($15,430)	$373,505	$0.0479
Feb-94	15,677	16,928	7,560,000	$214,114	$148,780	($15,001)	$347,893	$0.0460
Mar-94	14,098	16,928	7,011,200	$221,251	$137,980	($13,849)	$345,382	$0.0493
Apr-94	12,559	16,928	6,126,400	$206,977	$120,567	($8,688)	$318,856	$0.0520
May-94	12,815	16,928	6,216,000	$214,114	$122,330	($8,744)	$327,700	$0.0527
Jun-94	18,782	18,782	8,512,000	$253,339	$167,516	($11,343)	$409,512	$0.0481
Jul-94	18,930	18,930	9,844,800	$239,372	$193,745	($13,132)	$419,985	$0.0427
Aug-94	18,614	18,614	9,296,000	$235,385	$182,945	($12,304)	$406,026	$0.0437
Sep-94	18,271	18,271	8,691,200	$238,760	$171,042	($11,450)	$398,352	$0.0458
Total/Avg	16,154	17,552	91,145,600	$2,694,527	$1,793,739	($148,369)	$4,339,897	$0.0476

Table 4. Fort Eustis natural gas billing data.

Month-Yr.	FirmGas (CCF)	Gas Cost	Interruptible Gas(CCF)	Cost	Housing Gas(CCF)	Cost
Jan-94	105,837	$64,196	158,805	$48,747	92,770	$58,953
Feb-94	94,877	$57,734	193,291	$68,416	69,922	$45,966
Mar-94	64,711	$37,099	323,499	$119,212	40,463	$27,200
Apr-94	23,200	$13,868	174,136	$64,277	8,348	$9,966
May-94	17,877	$21,144	116,640	$37,800	5,005	$8,092
Jun-94	15,947	$8,908	113,570	$36,973	232	$5,353
Jul-94	16,274	$9,001	102,100	$32,518	166	$5,602
Aug-94	15,826	$8,808	115,023	$41,630	305	$5,678
Sep-94	13,442	$8,177	119,334	$43,074	1,697	$6,197
Oc-94	35,820	$20,732	163,181	$57,854	13,990	$13,006
Nov-94	53,653	$30,960	248,883	$87,769	30,961	$21,962
Dec-94	111,068	$66,980	330,549	$107,923	90,594	$62,813
Total:	568,532	$347,607	2,159,011	$736,193	354,451	$270,788
$ICCF		$0.61		$0.34		$0.76

The average firm gas cost is $0.61 per hundred cubic ft (CCF). The average interruptible gas rate is $0.34/CCF and the average family housing gas rate is $0.76/CCF. Fort Eustis is currently planning on purchasing natural gas from the Defense Fuel Supply Contract (DFSC). These rates show interruptible gas averaging about $2.72/MBtu (million BTU). Assuming 1,030 Btu/SCF, the DFSC rate is significantly less than the comparable Virginia Natural Gas interruptible rate of $3.30/MBtu ($0.34/CCF).

The Electric energy savings were calculated based on 1.98 cents/kWh and $12.62/kW. At a fuel cell capacity factor of 90 percent, this results in first year energy savings of $31,220 and potentially an additional $30,288 in demand savings. These values are calculated as follows:

200 kW * 8,760 hours/year * 90% => 1,576,800 kWh * $0.0198/kWh = $31,220.

200 kW * $12.62/kW => $2,524/month * 12 months/year = $30,288.

Estimating demand charge savings from the fuel cell is complicated with a 90 percent ratchet. For the 6 months (June - November) when the site's actual demand was higher than the 90 percent ratchet (minimum) demand, the fuel cell could take a full 200 kW demand charge savings credit. For the 6 months (December - May) when the site's actual demand is below the minimum demand, the fuel cell could take credit for 180 kW (200 kW * 90 percent) in demand charge savings, but only if the fuel cell was operating at 200 kW during the site's 11-month peak demand.

Table 5 presents the results for a number of fuel cell energy savings scenarios. Four thermal utilization scenarios were evaluated: maximum utilization (100 percent), "high" pool heating + DHW (68 percent), "high" pool heating only based on ASHRAE (60 percent) and "low" pool heating only based on previous measured data (39 percent). A displace boiler efficiency of 50 percent was assumed to account for the significant thermal losses from the steam distribution system. For electric demand reduction from the fuel cell, full demand savings, 50 percent demand savings and no demand savings scenarios were calculated. A natural gas rate of $2.72/MBtu was used based on the DFSC.

Table 5. Economic savings of fuel cell design alternatives at Fort Eustis.

Case	ECF	TU	Displaced kWh	Displaced Gas (MBtu)	Electrical Savings	Thermal Savings	Nat. Gas Cost	Net Savings
A - Max. Thermal	90%	100%	1,576,800	11,037	$61,508	$30,021	$40,661	$50,868
A - Pool + DHW Thermal	90%	68%	1,576,800	7,505	$61,508	$20,414	$40,661	$41,261
A - Pool Only (High Case)	90%	60%	1,576,800	6,622	$61,508	$18,012	$40,661	$38,859
A . Pool Only (Low Case)	90%	39%	1,576,800	4,304	$61,508	$11,708	$40,661	$32,555
B - Max. Thermal	90%	100%	1,576,800	11,037	$46,364	$30,021	$40,661	$35,724
B - Pool + DHW Thermal	90%	68%	1,576,800	7,505	$46,364	$20,414	$40,661	$26,117
B - Pool Only (High Case)	90%	60%	1,576,800	6,622	$46,364	$18,012	$40,661	$23,715
B - Pool Only (Low Case)	90%	39%	1,576,800	4,304	$46,364	$11,708	$40,661	$17,411
C - Max. Thermal	90%	100%	1,576,800	11,037	$31,220	$30,021	$40,661	$20,580
C - Pool + DHW Thermal	90%	68%	1,576,800	7,505	$31,220	$20,414	$40,661	$10,973
C - Pool Only (High Case)	90%	60%	1,576,800	6,622	$31,220	$18,012	$40,661	$8,571
C - Pool Only (Low Case)	90%	39%	1,576,800	4,304	$31,220	$11,708	$40,661	$2,267

Assumptions:

Natural Gas Rate: $2.72 /MBtu (From Defense Fuel Supply Contract estimate provided by Site)
Displaced Electricity Rate: $0.0198 /kWh
Displaced Demand Charge: $12.62 /kW
Fuel Cell Thermal Output: 700,000 Btu/hour
Fuel Cell Electrical Efficiency (HHV): 36%
Seasonal Boiler Efficiency: 50% (Includes distribution heat losses)
CASE A: full fuel cell demand savings
CASE B: 50% of full fuel cell demand savings
CASE C: zero fuel cell demand savings
ECF = Fuel cell electic capacity factor
TU = Thermal utilization

The results listed in Table 5 show net savings of $41,261 for the 68 percent thermal utilization ("high" pool + DHW) and full demand savings scenario. The pool only cases had a net savings range of $38,859 to $32,555 (60 percent and 39 percent thermal utilization, respectively). The value of adding the DHW load is $2,401 ($41,261 - $38,859).

A possible benefit from installing a 200 kW fuel cell at the Field House would be that Fort Eustis could shut down one of its central boiler facilities. Individual hot water heaters would have to be installed in eight different buildings, but site personnel expressed a willingness to install them if economically feasible. The site provided data on gas usage and other related costs at the boiler facility for the period April through September. Average gas costs assuming $2.72/MBtu are $7,835 per month. Water, chemicals and sewage treatment costs were $1,627 per month. Hot water heater efficiency was assumed to be 75 percent and the central boiler efficiency in the summer was estimated at 30 percent. The 30 percent overall efficiency accounts for the higher heat losses in the summer due to lower steam usage. Potential savings from shutting down the boiler during this 6-month period is approximately $37,968 as calculated below:

Gas savings: $7,835 * 6 months = $47,010

Other savings: $1,627 * 6 months = $9,762

Gas cost: $7,835 * (0.30/0.75) * 6 months = $18,804

Net Savings: $47,010 - $18,804 + $9,762 = $37,968

The analysis is a general overview of the economics. For the first 5 years, ONSI will be responsible for the fuel cell maintenance. Maintenance costs are not reflected in this analysis, but could represent a significant impact on net energy savings. Since load profile data were not available, energy savings could vary depending on actual electrical and thermal utilization.

3 Conclusions and Recommendations

The Field House represents a good application for a 200 kW fuel cell. The fuel cell can be sited right next to the building, thus minimizing thermal interface piping runs. While the entire thermal output is not likely to be fully used by the Field House (about 40 to 70 percent), it has a year round load and can use the majority of the thermal output. A water slide park is being built next to the Field House and could use some excess available thermal fuel cell output through a relatively short thermal interface connection. Adding the DHW load has an estimated 2-year pay back.

The fuel cell should be connected electrically to an added 13,200/208 volt transformer which can be located on an existing nearby transformer pad. In order for the Field House to serve as an emergency shelter, the grid isolated output terminals should be interconnected with a second 480/208 volt transformer (automated switching).

The ability to shut down the boiler plant in the 6 summer months represents a potentially significant benefit. The $37,968 net savings calculated increases the total fuel cell savings to $79,229 for the highest thermal utilization case (68 percent). This represents an 87 percent increase in net fuel cell savings. The technical and economic viability of this option should be explored by the site.

The site will be curtailing its base peak demand this summer to reduce demand charges. This load curtailment will effect primarily the summer air conditioning load. Once the fuel cell is installed, the 200 kW from the fuel cell can be used to keep the base peak demand at the curtailed limit and 200 kW of air conditioning load could then be reinstated.

Appendix: Fuel Cell Site Evaluation Form

Site Name: **Fort Eustis**

Location: **Newport News, Virginia**

Contacts: **Daniel Wood**

1. Electric Utility: **Virginia Power**
Contact: **Bill Watts**

Rate Schedule: **MS**

2. Gas Utility: **Virginia Natural Gas**
Contact: **Bill Robinson**

Rate Schedule: **various around base**

3. Available Fuels: **Natural Gas/ Fuel Oil**

Capacity Rate:

4. Hours of Use and Percent Occupied:

Weekdays	___5____	Hrs.___17__
Saturday	___1____	Hrs.___17__
Sunday	___1____	Hrs.___17__

5. Outdoor Temperature Range: **20's to 90's °F throughout year**

6. Environmental Issues: **Will require State air permit. No problems expected, but could take up to 3 mos.**

7. Backup Power Need/Requirement: **Largest back-up generator is 750 kW. Have several around base for specific sites. A 3.2 MW unit could be installed in 1996-97.**

8. Utility Interconnect/Power Quality Issues: **None**

9. On-site Personnel Capabilities: **Consolidated Natural Gas will provide maintenance. Plant personnel at site.**

10. Access for Fuel Cell Installation: **Access should adequate. Crane must drive under standard power lines and lift the fuel cell over a 10 foot high steam line.**

11. Daily Load Profile Availability: **No data were available**

12. Security: **Fence will be required by site. Requested green plastic clad chain link fence.**

Site Layout

Facility Type: **Gymnasium**
Construction: **Brick**
Sq Ft: **about 48,000 sq ft**

Age: **about 40 Years**

See Figure 1

Electrical System

Service Rating: **13,200/208 service with 150 kVA transformer. Peak measured load was 136 kW and current load during site visit was 48 kW.**

Electrically Sensitive Equipment:

Largest Motors (hp, usage):

Grid Independent Operation?: **Site would like to hook up for grid independent to use as an emergency shelter during utility outage. This adds significant public relations value.**

Steam/Hot Water System

Description: **Pressure reducers/heat exchangers on central plant steam line**

System Specifications: **100 psi @ 1,230 lbs./hour reduced to 40 and then 5 psi.**

Fuel Type: **Natural Gas/Fuel Oil**

Max Fuel Rate:

Storage Capacity/Type: **14' X 5' diameter horizontal tank for domestic hot water**

Interface Pipe Size/Description: **3 inch**

End Use Description/Profile: **The gymnasium operates 17 hours/day (5 a.m. to 10 p.m.), seven days/week. Steam is currently used to heat the pool and domestic hot water loops.**

Space Cooling System

Description: **No absorption chillers on central steam system.**

Air Conditioning Configuration:
Type:
Rating:
Make/Model:

Seasonality Profile:

Space Heating System

Description: **Heat exchangers on steam system.**

Fuel: **Steam from central plant**

Rating: **1,230 lbs./hour**

Water supply Temp: **about 195 °F**

Water Return Temp: **about 180 ° F**

Make/Model:

Thermal Storage (space?): **None**

Seasonality Profile: **mid-October to mid April**

Billing Data Summary

ELECTRICITY 9 10 11 12 13

Period	kWh	kW	Cost
1.			
2.			
3.			
4.			
5.			
6.			
7.			
8.			
9.			
10			
11.			
12.			

NATURAL GAS

Period	Consumption	Cost
1.		
2.		
3.		
4.		
5.		
6.		
7.		
8.		
9.		
10		
11.		
12.		

OTHER

Period	Consumption	Cost
1.		
2.		
3.		
4.		
5.		
6.		
7.		
8.		
9.		
10		
11.		
12.		

CERL Distribution

Commander, Fort Eustis
ATTN: ATZF-PWW (2)

Chief of Engineers
ATTN: CEHEC-IM-LH (2)

Engineer Research and Development Center (Libraries)
ATTN: ERDC, Vicksburg, MS
ATTN: Cold Regions Research, Hanover, NH
ATTN: Topographic Engineering Center, Alexandria, VA

Defense Tech Info Center 22304
ATTN: DTIC-O

8
6/00

REPORT DOCUMENTATION PAGE

Form Approved
OMB No. 0704-0188

Public reporting burden for this collection of information is estimated to average 1 hour per response, including the time for reviewing instructions, searching existing data sources, gathering and maintaining the data needed, and completing and reviewing this collection of information. Send comments regarding this burden estimate or any other aspect of this collection of information, including suggestions for reducing this burden to Department of Defense, Washington Headquarters Services, Directorate for Information Operations and Reports (0704-0188), 1215 Jefferson Davis Highway, Suite 1204, Arlington, VA 22202-4302. Respondents should be aware that notwithstanding any other provision of law, no person shall be subject to any penalty for failing to comply with a collection of information if it does not display a currently valid OMB control number. PLEASE DO NOT RETURN YOUR FORM TO THE ABOVE ADDRESS.

1. REPORT DATE (DD-MM-YYYY)
02-2001

2. REPORT TYPE
Final

3. DATES COVERED (From - To)

4. TITLE AND SUBTITLE
Site Evaluation for Application of Fuel Cell Technology:
Fort Eustis, VA

5a. CONTRACT NUMBER
88-94-D-0020

5b. GRANT NUMBER

5c. PROGRAM ELEMENT NUMBER

6. AUTHOR(S)
Michael J. Binder, Franklin H. Holcomb, and William R. Taylor

5d. PROJECT NUMBER
DACA

5e. TASK NUMBER

5f. WORK UNIT NUMBER

7. PERFORMING ORGANIZATION NAME(S) AND ADDRESS(ES)
U.S. Army Engineer Research and Development Center (ERDC)
Construction Engineering Research Laboratory (CERL)
P.O. Box 9005
Champaign, IL 61826-9005

8. PERFORMING ORGANIZATION REPORT NUMBER
ERDC/CERL TR-01-17

9. SPONSORING / MONITORING AGENCY NAME(S) AND ADDRESS(ES)
Fort Eustis
Directorate of Public Works
Building 1407
Fort Eustis, VA 23604

10. SPONSOR/MONITOR'S ACRONYM(S)
ATZF-PWW

11. SPONSOR/MONITOR'S REPORT NUMBER(S)

12. DISTRIBUTION / AVAILABILITY STATEMENT
Approved for public release; distribution is unlimited.

13. SUPPLEMENTARY NOTES
Copies are available from the National Technical Information Service, 5285 Port Royal Road, Springfield, VA 22161.

14. ABSTRACT

Fuel cells are an environmentally clean, quiet, and a highly efficient method for generating electricity and heat from natural gas and other fuels. Researchers at the U.S. Army Construction Engineering Research Laboratory (CERL) have actively participated in the development and application of advanced fuel cell technology since fiscal year 1993 (FY93). CERL selected and evaluated application sites, supervised the design and installation of fuel cells, actively monitored the operation and maintenance of fuel cells, and compiled "lessons learned" for feedback to the manufacturer for commercially available fuel cell power plants installed at Department of Defense (DoD) locations.

This report presents an overview of the information collected at Fort Eustis, Newport News, VA, along with a conceptual fuel cell installation layout and description of potential benefits the technology can provide at that location. Similar summaries of the site evaluation surveys for the remaining sites where CERL has managed and continues to monitor fuel cell installation and operation are available in the companion volumes to this report.

15. SUBJECT TERMS
fuel cells
energy technology alternatives
energy conservation
Fort Eustis, VA

16. SECURITY CLASSIFICATION OF:			17. LIMITATION OF ABSTRACT	18. NUMBER OF PAGES	19a. NAME OF RESPONSIBLE PERSON
					Michael J. Binder
a. REPORT	b. ABSTRACT	c. THIS PAGE			19b. TELEPHONE NUMBER (include area code)
Unclassified	Unclassified	Unclassified	SAR	28	(217) 373-7214

Standard Form 298 (Rev. 8-98)
Prescribed by ANSI Std. 239.18