ERDC/CERL TR-01-13

Construction Engineering Research Laboratory

US Army Corps of Engineers®
Engineer Research and Development Center

Site Evaluation for Application of Fuel Cell Technology

Fort Bliss, TX

Michael J. Binder, Franklin H. Holcomb, and William R. Taylor

February 2001

20010423074

Approved for public release; distribution is unlimited.

Foreword

In fiscal years 93 and 94, Congress provided funds for natural gas utilization equipment, part of which was specifically designated for procurement of natural gas fuel cells for power generation at military installations. The purchase, installation, and ongoing monitoring of 30 fuel cells provided by these appropriations has come to be known as the "DoD Fuel Cell Demonstration Program." Additional funding was provided by: the Office of the Deputy Under Secretary of Defense for Industrial Affairs & Installations, ODUSD (IA&I)/HE&E; the Strategic Environmental Research & Development Program (SERDP); the Assistant Chief of Staff for Installation Management (ACSIM); the U.S. Army Center for Public Works (CPW); the Naval Facilities Engineering Service Center (NFESC); and Headquarters (HQ), Air Force Civil Engineer Support Agency (AFCESA).

This report documents work done at Fort Bliss, El Paso, TX. Special thanks is owed to the Fort Bliss point of contact (POC), Joe Mathis, for providing investigators with access to needed information for this work. The work was performed by the Energy Branch (CF-E), of the Facilities Division (CF), Construction Engineering Research Laboratory (CERL). The CERL Principal Investigator was Michael J. Binder. Part of this work was performed by Science Applications International Corp. (SAIC), under Contract DACA88-94-D-0020, task orders 0002, 0006, 0007, 0010, and 0012. The technical editor was William J. Wolfe, Information Technology Laboratory. Larry M. Windingland is Chief, CEERD-CF-E, and L. Michael Golish is Chief, CEERD-CF. The associated Technical Director was Gary W. Schanche. The Acting Director of CERL is William D. Goran.

CERL is an element of the U.S. Army Engineer Research and Development Center (ERDC), U.S. Army Corps of Engineers. The Director of ERDC is Dr. James R. Houston and the Commander is COL James S. Weller.

DISCLAIMER

The contents of this report are not to be used for advertising, publication, or promotional purposes. Citation of trade names does not constitute an official endorsement or approval of the use of such commercial products. All product names and trademarks cited are the property of their respective owners.

The findings of this report are not to be construed as an official Department of the Army position unless so designated by other authorized documents.

DESTROY THIS REPORT WHEN IT IS NO LONGER NEEDED. DO NOT RETURN IT TO THE ORIGINATOR.

Contents

Foreword 2

List of Figures and Tables 4

1 Introduction 5

Background 5
Objective 6
Approach 6
Units of Weight and Measure 6

2 Site Description 8

Site Layout 8
Electrical System 9
Steam/Hot Water System 9
Space Heating System 10
Space Cooling System 10
Fuel Cell Location 10
Fuel Cell Interfaces 12
Economic Analysis 13

3 Conclusions 17

Appendix: Fuel Cell Site Evaluation Form 18

CERL Distribution 24

Report Documentation Page 25

List of Figures and Tables

Figures

1 Laundry and boiler plant site layout, Fort Bliss 9
2 Boiler plant site layout detail, Fort Bliss 10
3 Fuel cell layout and interfaces, Fort Bliss 11
4 Fuel cell thermal interface, Fort Bliss 13

Tables

1 Companion CERL site evaluation reports 7
2 Fort Bliss electricity consumption and costs 14
3 Fort Bliss natural gas consumption and costs 14
4 Economic savings of fuel cell installation 16

1 Introduction

Background

Fuel cells generate electricity through an electrochemical process that combines hydrogen and oxygen to generate direct current (DC) electricity. Fuel cells are an environmentally clean, quiet, and a highly efficient method for generating electricity and heat from natural gas and other fuels. Air emissions from fuel cells are so low that several Air Quality Management Districts in the United States have exempted fuel cells from requiring operating permits. Today's natural gas-fueled fuel cell power plants operate at electrical conversion efficiencies of 40 to 50 percent; these efficiencies are predicted to climb to 50 to 60 percent in the near future. In fact, if the heat from the fuel cell process is used in a cogeneration system, efficiencies can exceed 85 percent. By comparison, current conventional coal-based technologies operate at efficiencies of 33 to 35 percent.

Phosphoric Acid Fuel Cells (PAFCs) are in the initial stages of commercialization. While PAFCs are not now economically competitive with other more conventional energy production technologies, current cost projections predict that PAFC systems will become economically competitive within the next few years as market demand increases.

Fuel cell technology has been found suitable for a growing number of applications. The National Aeronautics and Space Administration (NASA) has used fuel cells for many years as the primary power source for space missions and currently uses fuel cells in the Space Shuttle program. Private corporations have recently been working on various approaches for developing fuel cells for stationary applications in the utility, industrial, and commercial markets. Researchers at the U.S. Army Engineer Research and Development Center (ERDC), Construction Engineering Research Laboratory (CERL) have actively participated in the development and application of advanced fuel cell technology since fiscal year 1993 (FY93), and have successfully executed several research and demonstration work units with a total funding of approximately $55M.

As of November 1997, 30 commercially available fuel cell power plants and their thermal interfaces have been installed at DoD locations. CERL has managed 29 of these installations. As a consequence, the Department of Defense (DoD) is the

owner of the largest fleet of fuel cells worldwide. CERL researchers have developed a methodology for selecting and evaluating application sites, have supervised the design and installation of fuel cells, and have actively monitored the operation and maintenance of fuel cells, and compiled "lessons learned" for feedback to manufacturers. This accumulated expertise and experience has enabled CERL to lead in the advancement of fuel cell technology through major efforts such as the DoD Fuel Cell Demonstration Program, the Climate Change Fuel Cell Program, research and development efforts aimed at fuel cell product improvement and cost reduction, and conferences and symposiums dedicated to the advancement of fuel cell technology and commercialization.

This report presents an overview of the information collected at Fort Bliss, TX along with a conceptual fuel cell installation layout and description of potential benefits the technology can provide at that location. Similar summaries of the site evaluation surveys for the remaining 28 sites where CERL has managed and continues to monitor fuel cell installation and operation are available in the companion volumes to this report (see Table 1).

Objective

The objective of this work was to evaluate Fort Bliss as a potential location for a fuel cell application.

Approach

On 27 and 28 August 1996, CERL and SAIC representatives visited Fort Bliss to investigate the site as a potential location for a 200 kW fuel cell. This report presents an overview of information collected at the Site along with a conceptual fuel cell installation layout and description of potential benefits. The appendix to this report includes a copy of the site evaluation form filled out at the site.

Units of Weight and Measure

U.S. standard units of measure are used throughout this report. A table of conversion factors for Standard International (SI) units is provided below.

1 ft	=	0.305 m	1 gal	=	3.78 L
1 mile	=	1.61 km	°F	=	°C (X 1.8) + 32
1 acre	=	0.405 ha	1 ton (cooling)	=	12,000 Btu

Table 1. Companion ERDC/CERL site evaluation reports.

Location	Report No.
Fort Bliss, TX	TR 01-13
Fort Eustis, VA	TR 00-17
Fort Huachuca, AZ	TR 00-14
Fort Richardson, AK	TR 00-Draft
Picatinny Arsenal, NJ	TR 00-24
Pine Bluff Arsenal, AR	TR 01-15
U.S. Army Soldier Systems Center, Natick, MA	TR 00-Draft
U.S. Military Academy, West Point, NY	TR 00-Draft
Watervliet Arsenal, Albany, NY	TR 00-Draft
911th Airlift Wing, Pittsburgh, PA	TR 00-18
934th Airlift Wing, Minneapolis, MN	TR 00-19
Barksdale Air Force Base (AFB), LA	TR 01-29
Davis-Monthan AFB, AZ	TR 00-23
Edwards AFB, CA	TR 00-Draft
Kirtland AFB, NM	TR 00-Draft
Laughlin AFB, TX	TR 00-Draft
Little Rock AFB, AR	TR 00-Draft
Nellis AFB, NV	TR 01-31
Westover Air Reserve Base (ARB), MA	TR 00-20
Construction Battalion Center (CBC), Port Hueneme, CA	TR 00-16
Naval Air Station Fallon, NV	TR 00-15
Naval Education Training Center, Newport, RI	TR 00-21
Naval Hospital, Marine Corps Base Camp Pendleton, CA	TR 00-Draft
Naval Hospital, Naval Air Station Jacksonville, FL	TR 01-30
Naval Oceanographic Office, John C. Stennis Space Center, MS	TR 01-3
Subase New London, Groton, CT	TR 00-Draft
U.S. Naval Academy, Annapolis, MD	TR 00-22
National Defense Center for Environmental Excellence (NDCEE), Johnstown, PA	TR 01-33
Naval Hospital, Marine Corps Air Ground Combat Center (MCAGCC), Twentynine Palms, CA	TR 01-32

2 Site Description

Fort Bliss, located in El Paso, TX, has over 1.1 million acres of land area. It was established in 1848 to protect American settlers from Indians and marauding bandits. Today, Fort Bliss is an Air Defense Artillery site where its mission is to train U.S. soldiers. It is also home to three Forces Command warfighting units: the 11th Air Defense Artillery Brigade, the 3rd Armored Cavalry Regiment, and the 978th Military Police Company.

The ASHRAE design temperatures at the Site are 24 °F for winter and 98 °F for summer. Extreme temperatures are 17 and 114 °F.

A boiler plant that provides heat to an adjacent base laundry facility was the only site selected by base personnel as a viable candidate for a 200 kW phosphoric acid fuel cell. The boiler plant (building 2033) is located next to the Federal Bureau of Prisons Unicor, Center Laundry (Building 2031). The laundry operates 5 days per week from 0630 to 1530 and is also open approximately four weekends per year. The laundry serves the base hospital and other base operations. The laundry operation may be expanded to a second shift if additional laundry sources from other adjacent or nearby Federal facilities are obtained. The laundry consists of a number of large washing and drying machines, steam presses, etc. The boiler plant generates steam that is used to produce hot water inside the boiler plant and to boost hot water and to operate steam presses inside the laundry facility.

Site Layout

Figure 1 shows a layout of the boiler plant and laundry facility. The boiler plant is adjacent to the laundry. There is an open gravel parking area on the south side of the boiler plant. The existing electrical transformers are on the north side of the boiler plant building on an elevated platform. Figure 2 shows a detailed layout of the boiler plant building, including the three boilers, hot water generators, water softeners, and a deaerator. Natural gas is located on the south side of the boiler plant.

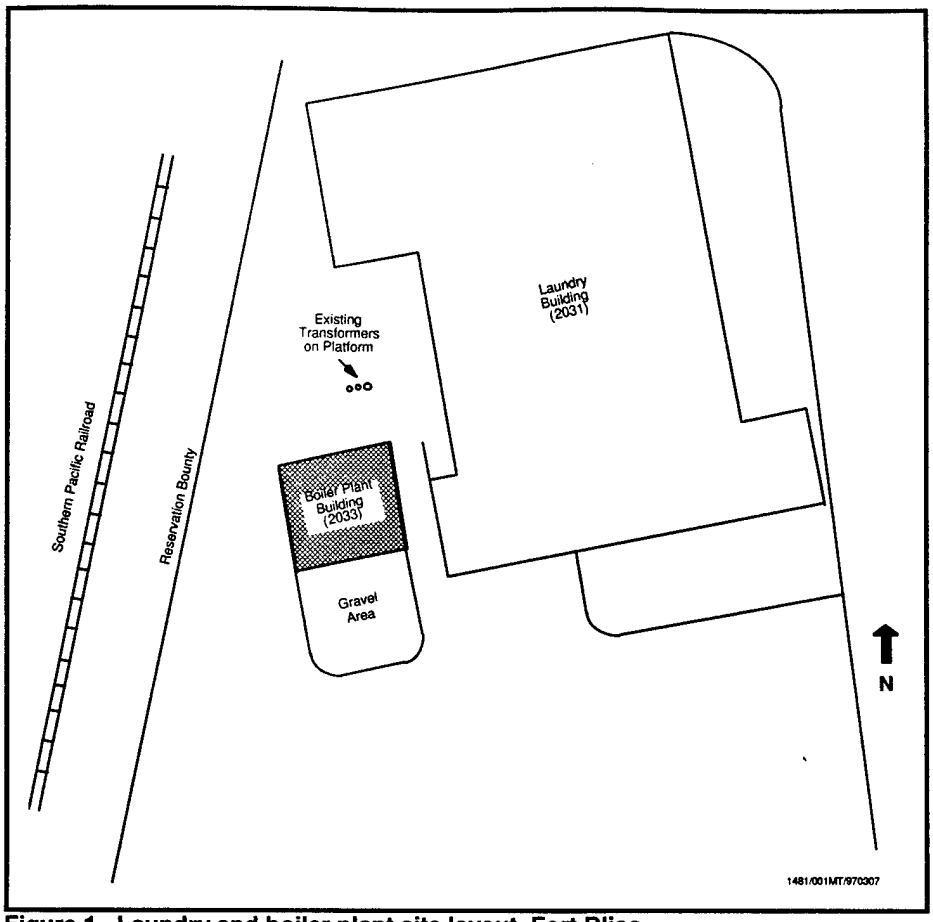

Figure 1. Laundry and boiler plant site layout, Fort Bliss.

Electrical System

Fort Bliss distributes electricity at 13,800 V. The boiler plant/laundry uses 240 V power. There is a 240/13,800 V transformer mounted on an elevated platform between the laundry and the boiler facility that powers the boiler plant.

Steam/Hot Water System

The boiler plant has three steam boilers. No name plate data was available for any of the boilers. The boilers run on natural gas and supply steam to four hot water generators. Hot water is used inside the laundry. Steam is also used directly in the laundry to boost hot water temperatures and to operate the clothes presses.

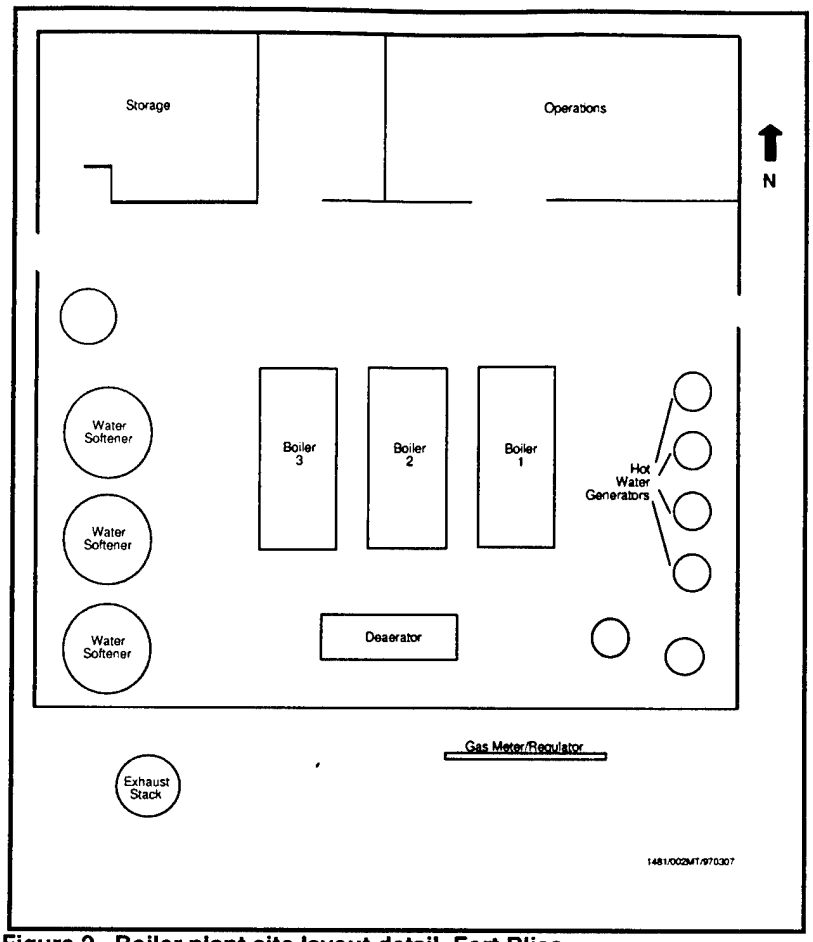

Figure 2. Boiler plant site layout detail, Fort Bliss.

Space Heating System

There is no space heating in the boiler plant. The laundry has a few residential forced air heaters for the office space.

Space Cooling System

There are a few rooftop mounted swamp coolers used for office space only.

Fuel Cell Location

The fuel cell should be located on the south side of the boiler plant in the open gravel parking area. As shown in Figure 3, it should be oriented in an east-west direction. The cooling module can be located in a north-south direction on the east side of the fuel cell. A new pad-mounted 480/13,800 V (300 kVA) electrical

transformer should be located next to the fuel cell as shown. An alternative option for the electrical interface would be to run the 480 V power line from the fuel cell up to near the transformer platform, and to locate the new 480/13,800 V transformer nearby.

The fuel cell thermal piping connections should face the building. Thermal piping runs would be about 50 ft. Piping to the cooling module will be 15 ft. The electrical run over to the new transformer would be about 35 ft. The installation POC stated that the base would be willing to bring a 13,800 V distribution line over to the new transformer. Natural gas should be brought over from the gas regulator, about 20 ft. The nitrogen piping run will be about 20 ft.

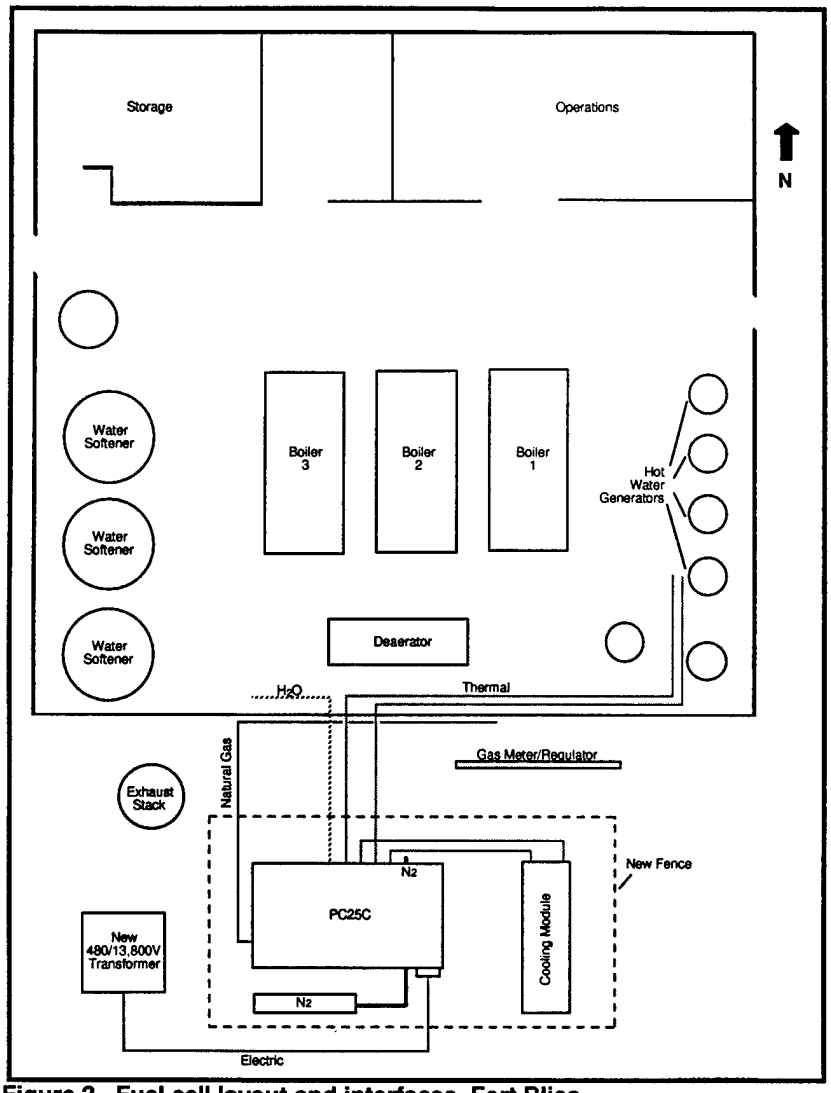

Figure 3. Fuel cell layout and interfaces, Fort Bliss.

Fuel Cell Interfaces

The boiler plant serving the laundry uses 240 volt power. Therefore, to interface the fuel cell, a new 480/13,800 V, 300 kVA transformer would be required. The transformers serving the boiler plant are located on the opposite side of the building from the proposed fuel cell location and are mounted on an above-ground platform. There is currently not sufficient room on the platform for the new transformer. It is recommended that the new transformer be pad-mounted next to the fuel cell, and that a 13.8 kV line be run to the new transformer. The base has offered to run the lines over to the new transformer. Another option would be to run the 480 V fuel cell output to near the existing transformer platform and locate the new 480/13,800 V transformer nearby. The fuel cell will operate in the grid connect mode only, with no option for back-up power.

The fuel cell thermal output would be used to heat the hot water used in the laundry. The hot water is currently heated using steam in four hot water generator tanks. Each tank holds 1140 gal of water. The laundry uses six washing machines that consume 50 gal of hot water per cycle and four washing machines that consume 75 gal of hot water per cycle. Base personnel estimated that all 10 washing machines operated 15 cycles per day. The laundry operates one 8-hour shift per day, 5 days per week throughout the year. The washing machines use 120 °F hot water. The hot water load during laundry operation is 516 kBtu/hr:

9,000 gal/day = (6 washers * 50 gal/cycle + 4 washers * 75 gal/cycle) * 15 cycle/day

516 kBtu/hr = [9,000 gal/day * 8.35 lb/gal * (120-65 °F)
* 1 Btu/°F-lb * 1 kBtu/1,000 Btu] / 8 hrs/day

At an average load of 516 kBtu/hr, the fuel cell can meet the entire hot water requirement for the laundry. The entering cold water should be routed through the fuel cell heat exchanger and the heated water returned to the top of the storage tanks (Figure 4). The flow should be controlled with a separate 25 gpm circulating pump. This will provide the desired flow through the fuel cell without restricting the flow in periods of high hot water demand. During periods of low (or no) hot water demand, the pump will pull water from the storage tanks to allow the fuel cell to keep the storage tanks hot. The circulating pump should run whenever the fuel cell is operating and the water temperature in the tanks is below the set point.

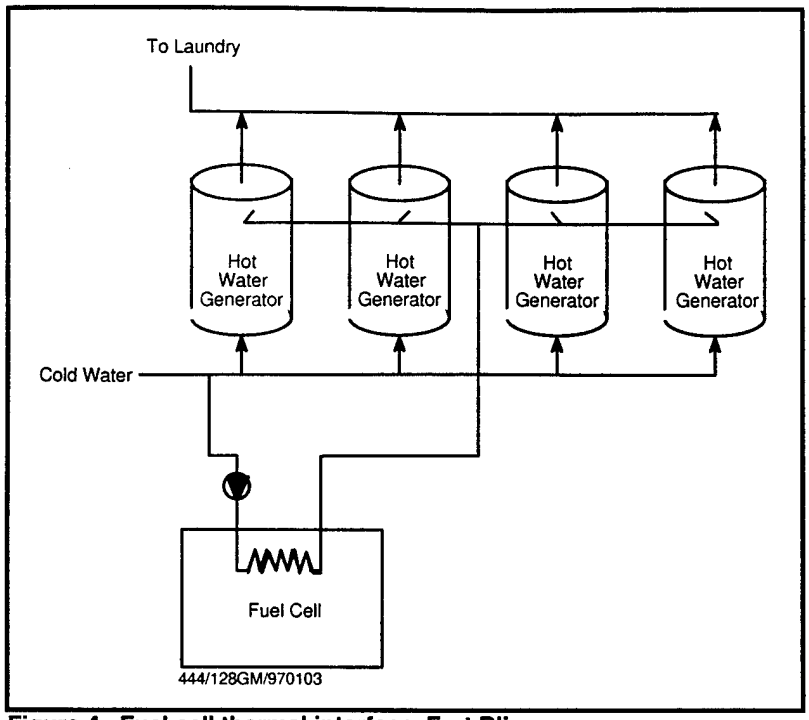

Figure 4. Fuel cell thermal interface, Fort Bliss.

The annual fuel cell thermal use would be 1,073 Mbtu:

1,073 MBtu = 516 kBtu/hr * 8 hrs/day * 5 days/week * 52 weeks/year
* 1 MBtu/1,000 kBtu

The measured boiler efficiency was 65 percent based on boiler log sheets. Thus the fuel cell, if operating 100 percent of the year, would displace 1,652 MBtu of input gas to the boilers:

1,651 MBtu = 1,073 MBtu/0.65

Economic Analysis

Fort Bliss purchases electricity from El Paso Electric Company under rate schedules #31 (Firm) and #27 (Interruptible). Each year, a "firm" demand level is established for Fort Bliss and adjustments are made based on increases or decreases in load. In 1996, the firm demand level was 21,000 kW. Fort Bliss is billed $23.25/kW for the entire 21,000 kW each month, regardless of its actual demand. For demand loads above 21,000 kW, Fort Bliss is billed $1.52/kW which is part of the interruptible rate. Energy charges are $0.00853/kWh for firm and $0.00545 for interruptible energy. Interruptible energy is based on the percentage of interruptible demand to the total demand and is calculated as:

Interruptible Energy = [(Actual Demand - 21,000) / Actual demand] * Total kWh

There is also a $0.01282/kWh fuel adjustment that is added to all site kWh. Table 2 lists electric consumption and costs for the August 1995 to July 1996 time frame. Natural gas is purchased from Southern Union Gas Company under rate schedules E5. Table 3 presents natural gas consumption and costs from August 1995 to July 1996. The monthly average rate varied from $0.1645/CCF in August 1995 to $0.2825/CCF in May 1996. The average gas cost for this period was $0.231/CCF.

Table 2. Fort Bliss electricity consumption and costs.

Date	Firm KWH	Interrupt KWH	Total KWH	KW	TotalCost	$/KWH
Aug-95	11,470,521	5,073,248	16,543,769	30,288	$778,205	$0.0470
Sep-95	9,803,668	3,481,236	13,284,904	28,457	$707,547	$0.0533
Oct-95	10,450,769	1,532,282	11,983,051	24,079	$702,505	$0.0586
Nov-95	10,813,787	124,616	10,938,403	21,242	$680,201	$0.0622
Dec-95	10,430,477	0	10,430,477	20,662	$669,372	$0.0642
Jan-96	11,783,482	97,635	11,881,117	21,174	$700,308	$0.0589
Feb-96	10,494,572	0	10,494,572	20,630	$670,741	$0.0639
Mar-96	10,385,983	0	10,385,983	20,113	$668,423	$0.0644
Apr-96	10,984,131	338,416	11,322,547	21,647	$688,360	$0.0608
May-96	10,689,294	2,894,253	13,583,547	26,686	$778,098	$0.0573
Jun-96	10,160,546	3,635,540	13,796,086	28,514	$732,562	$0.0531
Jul-96	11,465,575	4,477,580	15,943,155	29,201	$776,847	$0.0487
Tot/Avg	**128,932,805**	**21,654,806**	**150,587,611**	**24,391**	**$8,553,171**	**$0.0568**

Table 3. Fort Bliss natural gas consumption and costs.

Date	CCF	$/CCF	Total
Aug-95	263,917	$0.1645	$43,414
Sep-95	235,533	$0.1792	$42,207
Oct-95	312,379	$0.1922	$60,039
Nov-95	678,440	$0.2002	$135,823
Dec-95	1,246,081	$0.2133	$265,789
Jan-96	1,636,892	$0.2470	$404,312
Feb-96	911,757	$0.2373	$216,360
Mar-96	898,890	$0.2565	$230,538
Apr-96	430,734	$0.2641	$113,757
May-96	158,599	$0.2825	$44,804
Jun-96	180,138	$0.2761	$49,736
Jul-96	206,535	$0.2278	$47,048
Tot/Avg	**7,159,895**	**$0.231**	**$1,653,828**

Electric savings from the fuel cell were calculated based on the fuel cell operating 90 percent of the year (1,576,800 kWh). Demand savings were calculated assuming that the energy bill for the Site would be reduced for the full 200 kW each month. The installation POC indicated that the installation of a 200 kW fuel cell would directly lead to a 200 kW reduction in the firm demand level at

the time of adjustment. The fuel cell will be displacing firm electricity 95 to 100 percent of the time depending on the total site demand in a month. For estimating electric energy savings, the firm kWh rate was used. The electric savings for full demand savings and a 90 percent fuel cell capacity factor would be $89,465.

Demand Savings: 200 kW * $23.25/kW * 12 months = $55,800

Energy Savings: 1,576,800 kWh * ($0.00853/kWh + $0.01282/kWh) = $33,665

It was previously estimated that the fuel cell could supply 1,073 MBtu of thermal energy in a year, which is a thermal utilization of 17 percent.

17% = 1,073 MBtu / (.7 MBtu/hr * 8,760 hrs/yr)

Assuming a 65 percent displaced boiler efficiency and a 90 percent fuel cell capacity factor, the fuel cell would displace 1,486 MBtu of natural gas at the boiler plant:

1,486 MBtu = (1,073 MBtu * 90% capacity factor) / 65% boiler eff.

Based on an average gas rate of $0.231/CCF, thermal savings from the fuel cell would be:

$3,329 = (1,486 MBtu * $0.231/CCF) / 0.1031 MBtu/CCF

The fuel cell will consume 14,949 MBtu per year based on an electrical efficiency of 36 percent HHV (higher heating value). Input natural gas cost for the fuel cell is $33,494.

$33,494 = (14,949 MBtu * $0.231/CCF) / 0.1031 MBtu/CCF

Table 4 lists estimated savings for the fuel cell with 100 percent demand savings and 17 percent thermal utilization. Net savings of $59,300 were calculated. For 50 percent demand savings, net savings were reduced to $31,400. Table 4 also presents savings for 100 percent thermal utilization if the site could use all the fuel cell output.

This analysis is a general overview of the potential savings from the fuel cell. For the first 56 months, ONSI will be responsible for the fuel cell maintenance. Maintenance costs are not reflected in this analysis, but could represent a significant impact on net energy savings. Since detailed load energy profiles were not available, net energy savings could vary depending on actual thermal and electrical utilization.

Table 4. Economic savings of fuel cell installation.

Case	ECF	TU	Displaced kWh	Displaced Gas (MBtu)	Electrical Savings	Thermal Savings	Nat. Gas Cost	Net Savings
Full Demand Savings								
Max. Thermal Case	90%	100%	1,576,800	8,490	$89,465	$19,022	$33,494	$74,993
Base Case	90%	17%	1,576,800	1,486	$89,465	$3,329	$33,494	$59,300
50% Demand Savings:								
Max. Thermal Case	90%	100%	1,576,800	8,490	$61,565	$19,022	$33,494	$47,093
Base Case	90%	17%	1,576,800	1,486	$61,565	$3,329	$33,494	$31,400
ERO Demand Savings								
Max. Thermal Case	90%	100%	1,576,800	8,490	$33,665	$19,022	$33,494	$19,193
Base Case	90%	17%	1,576,800	1,486	$33,665	$3,329	$33,494	$3,500

Assumptions:

Natural Gas Rate: $0.231 /CCF

Electricity Rate:

$23.25 /kW

$0.02135 /kWh

Fuel Cell Thermal Output: 700,000 Btu/hour

Fuel Cell Electrical Efficiency (HHV): 36%

Seasonal Boiler Efficiency: 65%

ECF = Fuel cell electric capacity factor

TU = Thermal utilization

3 Conclusions

This study concludes that Fort Bliss represents a good opportunity for application of a 200 kW phosphoric acid fuel cell. There is ample space available next to the boiler plant to locate the fuel cell. All piping runs will be relatively short. A new 300 kVA, 480/13,800 V transformer will be required. The base has offered to bring a 13,800 V line over to the new transformer. A security fence around the fuel cell is required for this installation.

Net savings from the fuel cell are estimated to be $59,300 per year based on a fuel cell thermal utilization of 17 percent. If the laundry were to obtain more business to run longer hours, the fuel cell thermal utilization along with energy savings could be increased.

Appendix: Fuel Cell Site Evaluation Form

Site Name: **Fort Bliss**
Location: **El Paso, TX**

Contacts: **Joe Mathis**

---

1. Electric Utility: **El Paso Electric**

   Rate Schedule: Firm - **#31**
   Interruptible - **#27**

2. Gas Utility: **Southern Union Gas**

   Rate Schedule: **E5**

3. Available Fuels: **Natural Gas**

4. Hours of Use and Percent Occupied:
   Hours listed are for galley
   Pool is heated 24 hr./day

Weekdays	5	Hrs	8
Saturday	____	Hrs	____
Sunday	____	Hrs	____

5. Outdoor Temperature Range:
   Design dry bulb temperatures: **24 °F to 98 °F**
   Extremes: **17 °F to 114 °F**

6. Environmental Issues:
   County is a non-attainment area for ozone

7 Backup Power Need/Requirement:
   9 MW of generation (6 X 1.5 MW)

8. Utility Interconnect/Power Quality Issues:
   Have a number of outages each year due to 4 Corners and Palo Verde

9. On-site Personnel Capabilities:
   Two boiler plant operators

10. Access for Fuel Cell Installation:
    O.K.

11. Daily Load Profile Availability:
    No data available

12. Security:
    Fence Required

Site Layout

Facility Type: **Boiler Plant and Laundry** Age: **56 years**
Construction: **Corrugated metal**

Square Feet: **4,100 sq ft (boiler plant)**

See Figures 2 & 3

Show: electrical/ thermal/gas/water interfaces and length of runs
drainage
building/fuel cell site dimensions
ground obstructions

Electrical System

Service Rating: **13.8 kV distribution system on base, 240 V at boiler plant**

Electrically Sensitive Equipment: **N/A**

Largest Motors (hp, usage): **N/A**

Grid Independent Operation?: **No**

Steam/Hot Water System

Description: **Three steam boilers (no name plate information)**

System Specifications:

Fuel Type: **Natural Gas**

Max Fuel Rate:

Storage Capacity/Type: **Four steam hot water generation tanks**

Interface Pipe Size/Description: **6 in.**

End Use Description/Profile:
Steam provided by boilers used in laundry processes (presses, hot water boost) and for hot water generation.

Space Cooling System

Description: **Swamp coolers in office spaces only.**

Air Conditioning Configuration:
Type:
Rating:
Make/Model:

Seasonality Profile:

Space Heating System

Description: **Small forced air (residential) heaters in selected areas.**

Fuel: **Natural Gas**

Rating:

Water supply Temp:

Water Return Temp:

Make/Model:

Thermal Storage (space?): **N/A**

Seasonality Profile:

CERL Distribution

Commander, Fort Bliss
ATTN: ATZC-ISE-P (2)

Chief of Engineers
ATTN: CEHEC-IM-LH (2)

Engineer Research and Development Center (Libraries)
ATTN: ERDC, Vicksburg, MS
ATTN: Cold Regions Research, Hanover, NH
ATTN: Topographic Engineering Center, Alexandria, VA

Defense Tech Info Center 22304
ATTN: DTIC-O

8
6/00

REPORT DOCUMENTATION PAGE

Form Approved
OMB No. 0704-0188

Public reporting burden for this collection of information is estimated to average 1 hour per response, including the time for reviewing instructions, searching existing data sources, gathering and maintaining the data needed, and completing and reviewing this collection of information. Send comments regarding this burden estimate or any other aspect of this collection of information, including suggestions for reducing this burden to Department of Defense, Washington Headquarters Services, Directorate for Information Operations and Reports (0704-0188), 1215 Jefferson Davis Highway, Suite 1204, Arlington, VA 22202-4302. Respondents should be aware that notwithstanding any other provision of law, no person shall be subject to any penalty for failing to comply with a collection of information if it does not display a currently valid OMB control number. PLEASE DO NOT RETURN YOUR FORM TO THE ABOVE ADDRESS.

1. REPORT DATE (DD-MM-YYYY)
02-2001

2. REPORT TYPE
Final

3. DATES COVERED (From - To)

4. TITLE AND SUBTITLE
Site Evaluation for Application of Fuel Cell Technology:
Fort Bliss, TX

5a. CONTRACT NUMBER
88-94-D-0020

5b. GRANT NUMBER

5c. PROGRAM ELEMENT NUMBER

6. AUTHOR(S)
Michael J. Binder, Franklin H. Holcomb, and William R. Taylor

5d. PROJECT NUMBER
DACA

5e. TASK NUMBER

5f. WORK UNIT NUMBER

7. PERFORMING ORGANIZATION NAME(S) AND ADDRESS(ES)
U.S. Army Engineer Research and Development Center (ERDC)
Construction Engineering Research Laboratory (CERL)
P.O. Box 9005
Champaign, IL 61826-9005

8. PERFORMING ORGANIZATION REPORT NUMBER
ERDC/CERL TR-01-13

9. SPONSORING / MONITORING AGENCY NAME(S) AND ADDRESS(ES)
Fort Bliss
Directorate of Public Works
Fort Bliss, TX 79916-0058

10. SPONSOR/MONITOR'S ACRONYM(S)
ATZC-ISE-P

11. SPONSOR/MONITOR'S REPORT NUMBER(S)

12. DISTRIBUTION / AVAILABILITY STATEMENT
Approved for public release; distribution is unlimited.

13. SUPPLEMENTARY NOTES
Copies are available from the National Technical Information Service, 5285 Port Royal Road, Springfield, VA 22161.

14. ABSTRACT

Fuel cells are an environmentally clean, quiet, and a highly efficient method for generating electricity and heat from natural gas and other fuels. Researchers at the U.S. Army Engineer Research and Development Center (ERDC), Construction Engineering Research Laboratory (CERL) have actively participated in the development and application of advanced fuel cell technology since fiscal year 1993 (FY93). CERL has selected and evaluated application sites, supervised the design and installation of fuel cells, actively monitored the operation and maintenance of fuel cells, and compiled "lessons learned" for feedback to the manufacturer for commercially available fuel cell power plants installed at Department of Defense (DoD) locations.

This report presents an overview of the information collected at Fort Bliss, TX, along with a conceptual fuel cell installation layout and description of potential benefits the technology can provide at that location. Similar summaries of the site evaluation surveys for the remaining sites where CERL has managed and continues to monitor fuel cell installation and operation are available in the companion volumes to this report.

15. SUBJECT TERMS
fuel cells
Fort Bliss, TX
fuel technology alternatives
energy conservation

16. SECURITY CLASSIFICATION OF:			17. LIMITATION OF ABSTRACT	18. NUMBER OF PAGES	19a. NAME OF RESPONSIBLE PERSON
					Michael J. Binder
a. REPORT	b. ABSTRACT	c. THIS PAGE			19b. TELEPHONE NUMBER (include area code)
Unclassified	Unclassified	Unclassified	SAR	24	(217) 373-7214

Standard Form 298 (Rev. 8-98)
Prescribed by ANSI Std. 239.18