# FINAL
# SITE-SPECIFIC TECHNICAL REPORT FOR THE EVALUATION OF THERMATRIX GS SERIES FLAMELESS THERMAL OXIDZER FOR OFF-GAS TREATMENT OF SOIL VAPORS WITH VOLATILE ORGANIC COMPOUNDS AT THE SOURCE AREA REDUCTION SYSTEM FORMER LOWRY AIR FORCE BASE, COLORADO

**NOVEMBER 1998**

**Distribution is unlimited; approved for public release**

AIR FORCE CENTER FOR ENVIRONMENTAL EXCELLENCE (AFCEE)
TECHNOLOGY TRANSFER DIVISION

DTIC QUALITY INSPECTED 4

20001004 020

# FINAL
# SITE-SPECIFIC TECHNICAL REPORT
# FOR THE EVALUATION OF THERMATRIX GS SERIES FLAMELESS THERMAL OXIDIZER FOR OFF-GAS TREATMENT OF SOIL VAPORS CONTAINING CHLORINATED VOLATILE ORGANIC COMPOUNDS AT THE SOURCE AREA REDUCTION SYSTEM FORMER LOWRY AIR FORCE BASE, COLORADO

**November 1998**

**by**
**Steven R. Archabal, Douglas C. Downey, Thomas E. Dragoo, and Peter R. Guest**
**PARSONS ENGINEERING SCIENCE, INC.**
**DENVER, COLORADO**

**for**
**US AIR FORCE**
**CENTER FOR ENVIRONMENTAL EXCELLENCE**
**TECHNOLOGY TRANSFER DIVISION**
**BROOKS AIR FORCE BASE, TEXAS**

*This document was prepared for the United States Government by Parsons Engineering Science, Inc. In no event shall either the United States Government or Parsons Engineering Science, Inc. have any responsibility or liability for any consequences of any use, misuse, inability to use, or reliance upon the information contained herein, nor does either warrant or otherwise represent in any way the accuracy, adequacy, or applicability of the contents hereof.*

# PREFACE

Parsons Engineering Science, Inc. (Parsons ES) was contracted by the Air Force Center for Environmental Excellence (AFCEE) Technology Transfer Division (ERT) to perform a technology demonstration of the Thermatrix, Inc. GS Series Flameless Thermal Oxidizer (FTO) at the Source Area Reduction System (SARS), former Lowry Air Force Base (AFB), Colorado. The work was performed for AFCEE/ERT under Contract F41624-94-D-8136, Delivery Order 28.

**Key AFCEE/ERT personnel:**

Jim Gonzales - Project Manager

**Key Lowry AFB personnel**

John Miller - AFCEE/ERB

Bruce Kroehl - Air Force Base Conversion Agency (AFBCA/OL-N)

**Key Parsons ES personnel:**

Steven R. Archabal - Site Manager

Douglas C. Downey - Technical Director

Judy A. Blakemore, Thomas E. Dragoo, and William A. Plaehn - Field Engineers

Peter R. Guest - Project Manager

# TABLE OF CONTENTS


| | | Page |
|---|---|---|
| Preface | | ii |
| List of Acronyms | | v |
| 1.0 | INTRODUCTION | 1-1 |
| 1.1 | Scope and Objectives | 1-1 |
| 1.2 | Site History | 1-2 |
| | 1.2.1 Background | 1-2 |
| | 1.2.2 Operational History | 1-2 |
| | 1.2.3 Previous Investigations | 1-2 |
| | 1.2.4 Source Area Reduction System Design | 1-2 |
| 1.3 | Report Organization | 1-4 |
| 2.0 | DESCRIPTION OF TECHNOLOGY | 2-1 |
| 2.1 | Description of Thermatrix Flameless Thermal Oxidation Unit | 2-1 |
| 2.2 | System Capabilities | 2-3 |
| 2.3 | Capital Equipment | 2-4 |
| 2.4 | Regulatory Acceptance | 2-4 |
| 3 | FIELD DEMONSTRATION RESULTS | 3-1 |
| 3.1 | FTO System Configuration | 3-1 |
| 3.2 | Soil Vapor Concentrations and Extraction Rates | 3-4 |
| 3.3 | Observed FTO Performance | 3-6 |
| | 3.3.1 Vapor Treatment Efficiency | 3-6 |
| | 3.3.2 Operating Costs | 3-7 |
| | 3.3.3 Reliability and Maintainability | 3-9 |
| 3.4 | Technology Performance Summary | 3-11 |
| 4 | FULL-SCALE VAPOR RECOVERY AND TREATMENT FOR THE SOURCE AREA REDUCTION SYSTEM | 4-1 |
| 4.1 | Full-Scale Design | 4-1 |
| 4.2 | Comparison of Vapor Treatment Technologies | 4-2 |
| | 4.2.1 Available Treatment Technologies | 4-2 |
| | 4.2.2 Cost Comparison of Vapor Treatment Technologies | 4-2 |
| 5 | REFERENCES | 5-1 |

APPENDICES

A Piping and Instrumentation Diagrams and Vendor Information
B Regulatory Correspondence
C Analytical Data Reports 1 through 5
D Vendor Quotes for Various Vapor Treatment Technologies

## LIST OF TABLES

| No. | Title | Page |
|---|---|---|
| 2.1 | Summary of Vendor Capital Costs | 2-6 |
| 3.1 | Detected Analytes in Extracted Vapor Stream Samples | 3-5 |
| 3.2 | Summary of FTO Treatment Efficiencies | 3-7 |
| 3.3 | Summary of FTO Technology Demonstration Costs | 3-8 |
| 3.4 | Field Measurements and System Operating Conditions | 3-10 |
| 3.5 | Total Hydrocarbon Mass Removal and Emissions | 3-12 |
| 3.6 | Trichloroethene Mass Removal and Emissions | 3-13 |
| 4.1 | Capitol and Operating Cost Comparison of FTO and Granular Activated Carbon for Treatment of Soil Vapors | 4-4 |

## LIST OF FIGURES

| No. | Title | Page |
|---|---|---|
| 1.1 | FTO Treatment System Demonstration Location | 1-3 |
| 2.1 | Schematic of FTO Treatment Process | 2-2 |
| 3.1 | Layout of FTO Demonstration Components | 3-2 |
| 3.2 | Photographs of FTO System Layout | 3-3 |

## LIST OF ACRONYMS

| | |
|---|---|
| 1,1-DCE | 1,1-dichloroethene |
| *cis*-1,2-DCE | *cis*-1,2-dichloroethene |
| AFCEE | Air Force Center for Environmental Excellence |
| °F | degrees Fahrenheit |
| AFB | Air Force Base |
| AFBCA | Air Force Base Conversion Agency |
| AFCEE | Air Force Center for Environmental Excellence |
| APCD | Air Pollution Control Division |
| APEN | Air Pollution Emission Notice |
| BAA | Broad Agency Announcement |
| CAH | chlorinated aliphatic hydrocarbons |
| CDPHE | Colorado Department of Public Health and Environment |
| cfm | cubic feet per minute |
| DPE | dual-phase extraction |
| DRE | destruction/removal efficiency |
| ERT | Technology Transfer Division |
| FTO | flameless thermal oxidation |
| GAC | granular activated carbon |
| HAP | hazardous air pollutant |
| HCl | hydrochloric acid |
| lb/day | pounds per day |
| lb/hr | pounds per hour |
| lb/yr | pounds per year |
| LEL | lower explosive limit |
| Parsons ES | Parsons Engineering Science, Inc. |
| PCE | tetrachloroethene |
| P&Id | piping and instrumentation diagram |
| ppbv | parts per billion, volume per volume |
| ppmv | parts per million volume per volume |
| PVC | polyvinyl chloride |
| SARS | Source Area Reduction System |
| scfm | standard cubic feet per minute |
| SOW | statement of work |
| SVE | soil vapor extraction |
| 1,1,1-TCA | 1,1,1-trichloroethane |
| TCE | trichloroethene |
| THC | total hydrocarbon compounds |
| Thermatrix | Thermatrix, Inc. |
| UEL | upper explosive limit |
| USEPA | US Environmental Protection Agency |
| Versar | Versar, Inc. |
| VOC | volatile organic compound |

# SECTION 1

# INTRODUCTION

## 1.1 SCOPE AND OBJECTIVES

The Air Force Center for Environmental Excellence (AFCEE) has sponsored an ongoing program to promote the use of cost-effective soil vapor treatment technologies in conjunction with soil vapor extraction (SVE) for remediation of fuel- and solvent-impacted sites. On September 20, 1995, Parsons Engineering Science, Inc. (Parsons ES) received formal notice to proceed from HSD/PKVDA at Brooks Air Force Base (AFB) under Contract F41624-94-D-8136, Delivery Order 28, to implement a statement of work (SOW) that outlines requirements to provide services to support environmental air conformity through evaluation of the flameless thermal oxidation (FTO) vapor-phase treatment technology for SVE off-gas abatement at various Air Force base sites worldwide. Thermatrix, Inc. (Thermatrix) of Knoxville, Tennessee is an AFCEE-directed subcontractor providing the FTO treatment system to be evaluated during the demonstrations. Thermatrix was selected through the Broad Agency Announcement (BAA) that included demonstrations for evaluation of cost and performance of their GS Series FTO system. A technology demonstration was designed by Parsons ES to determine the applicability of using FTO technology for treatment of extracted soil vapors containing chlorinated and non-chlorinated volatile organic compounds (VOCs). Three Air Force installations were identified for FTO system demonstrations, including the Source Area Reduction System (SARS) at the former Lowry AFB, Colorado. The results of the FTO system demonstration at the SARS are summarized in this report.

The FTO treatment unit was mobilized to the SARS on March 10, 1998; however, the SARS did not become operational until May 1998. In April 1998, the FTO system was prepared for startup. Startup and optimization were conducted between 18 and 20 May 1998. The FTO unit began treating soil vapors from the SARS at 0800 hours on May 20, 1998. The extended operation and monitoring of the FTO system was conducted from May 20 to September 1, 1998.

The FTO technology demonstration was performed in accordance with the *Final Work Plan for the Evaluation of Flameless Thermal Oxidation at former Lowry AFB, Colorado* (the work plan) (Parsons ES, 1998). The purposes of this site-specific technical report are to:

- Evaluate the effectiveness of the FTO system;
- Summarize FTO system performance, operational costs, and reliability; and
- Evaluate full-scale treatment system application for the SARS.

## 1.2 SITE HISTORY

### 1.2.1 Background

The former Lowry AFB is located in Denver and Arapahoe Counties, Colorado, approximately 5 miles south of the former Stapleton International Airport. The former Lowry AFB occupies approximately 1,900 acres of land in the jurisdictional boundaries of the cities of Denver and Aurora. Lowry AFB was established in 1937 as an Army Air Corps Technical School. The Base's subsequent mission was to provide military and technical training for officers and enlisted staff of the Air Force, Air Force Reserve, Air National Guard, and other Department of Defense agencies.

Lowry AFB was closed as a military installment on September 30, 1994. The facility currently is undergoing closure, decommissioning, and redevelopment as a mixed-use project.

### 1.2.2 Operational History

In this document, the "source area" at which the SARS is located refers to the area at the former Lowry AFB between the Westerly Creek storm sewer outfall pipes, located north of 6th Avenue, and the culverts beneath Starboard Circle (Figure 1.1). The source area was identified in previous investigations as an upgradient source of trichloroethene (TCE) contamination currently impacting groundwater in the north-central and north-northwestern portions of the former Base. Industrial wastes, such as greases and solvents associated with aircraft maintenance, may have been discharged into the storm sewer system, as described in Section 1.3 of the *Site Characterization Summary Informal Technical Information Report Landfill Zone, Fire Training Zone, Fly Ash Disposal Area* (Parsons ES, 1995). More recent investigations, including the *Draft Preliminary Site Characterization Summary Report Operable Unit 5, Groundwater* (Versar, Inc. [Versar] 1995), summarized the nature and extent of the TCE contamination at the former Lowry AFB.

### 1.2.3 Previous Investigations

Several site investigations have been conducted under the Air Force Installation Restoration Program to characterize soil and groundwater contamination and to collect data to evaluate remedial technologies at the TCE source area. In March and April 1995, an interim remedial action field investigation was conducted by Versar and Remediation Technologies, Inc. (1996) to provide additional information on the nature and extent of the contamination in the soil and groundwater, and to provide a basis for screening remedial technologies in the Detailed Analysis of Alternatives Report. The field investigation consisted of drilling 15 soil borings, and installing 6 monitoring wells and 23 piezometers. A dual-phase extraction (DPE) pilot test and an aquifer pump test also were conducted during the investigation. Based on the results of these investigations, the remedial action selected as the most appropriate technology for the SARS included a combination of slurry-wall isolation and DPE wells for *ex situ* treatment of extracted groundwater and soil vapors.

### 1.2.4 Source Area Reduction System Design

The purpose of the SARS is to reduce a significant portion of the mass of TCE and other VOCs in the source area. Source-mass reduction is being accomplished by lowering the

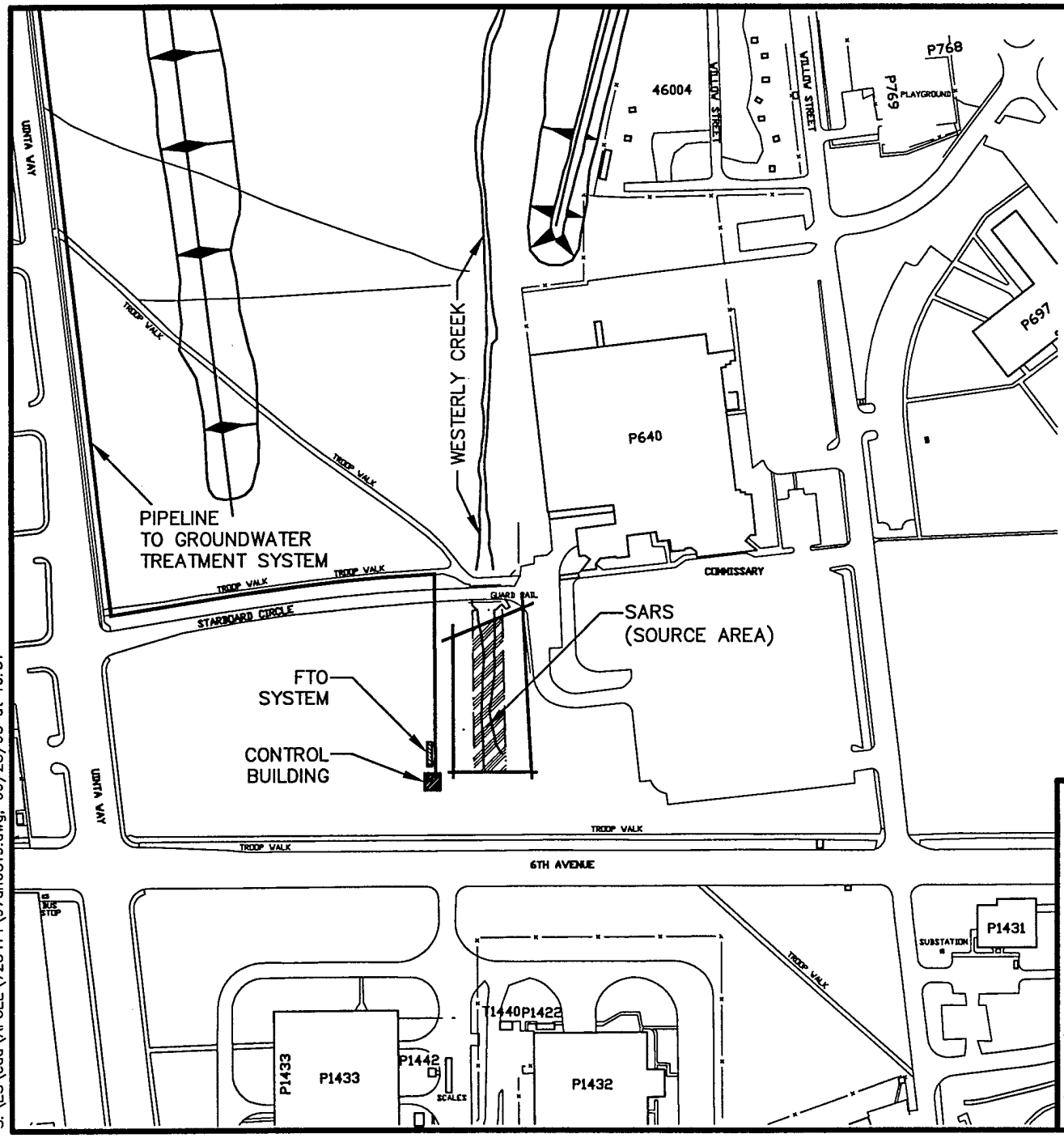


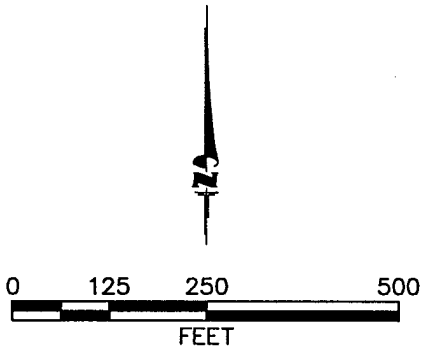


**FIGURE 1.1**

**FTO TREATMENT SYSTEM DEMONSTRATION LOCATION**

FTO Treatment System Demonstration
Source Area Reduction System
Former Lowry AFB, Colorado

**PARSONS ENGINEERING SCIENCE, INC.**

Denver, Colorado

S:\ES\cad\AFCEE\728414\97dn0819.dwg, 09/28/98 at 10:51

groundwater table in the treatment area, and extracting VOC-contaminated soil vapors using a system of DPE wells. A slurry wall has been installed around the DPE wells to isolate the source area and reduce the inflow (recharge) of groundwater into the treatment area (Versar, 1996).

The SARS was constructed for the Air Force by Versar, Inc. The SARS consists of 15 DPE wells, a liquid-ring vacuum pump, two water transfer pumps, an air/water separator tank, three carbon canisters, and associated piping and instrumentation. Based on data collected from an initial pilot test conducted by Versar, the average TCE concentration estimated to be extracted by the SARS was 54,000 part per billion by volume (ppbv). During the demonstration, the FTO system was used to treat a portion of the vapors (slip-stream) that were extracted via the DPE wells installed by Versar.

## 1.3 REPORT ORGANIZATION

This document is organized into five sections and four appendices. A summary of the report contents follows:

- **Section 1**: Introduction and site history;
- **Section 2**: A description of the FTO technology, the vendor's statement of capabilities, and a summary of regulatory acceptance;
- **Section 3:** A description of the field demonstration results, including soil vapor extraction rates, VOC concentrations, and performance of the FTO system;
- **Section 4:** A discussion of full-scale design considerations and a cost comparison of FTO technology and granular activated carbon;
- **Section 5:** Presents references cited in this document;
- **Appendix A:** Piping and instrumentation diagrams (P&IDs) and vendor information for the FTO system;
- **Appendix B:** Regulatory correspondence;
- **Appendix C:** Analytical data reports 1 through 5; and
- **Appendix D:** Vendor Quotes.

# SECTION 2

# DESCRIPTION OF TECHNOLOGY

FTO is a technology that can be used to treat extracted soil vapors that contain chlorinated and/or petroleum hydrocarbons. The extracted vapors are heated to temperatures sufficient to oxidize chemical constituents and form carbon dioxide and water vapor, and, in the case of chlorinated hydrocarbons, hydrochloric acid (HCl). The following subsections describe the Thermatrix FTO system tested at the SARS, system treatment capabilities, and acceptance of the technology by regulatory agencies.

## 2.1 DESCRIPTION OF THERMATRIX FLAMELESS THERMAL OXIDATION UNIT

Thermatrix of Knoxville, Tennessee has developed a proprietary technology for FTO of VOCs in vapor streams. The Thermatrix GS Series FTO system employs a "packed-bed" ceramic matrix. The oxidation of VOCs in the influent vapor stream occurs in a reaction zone within the ceramic matrix. Typical operating temperatures range from 1,600 to 1,850 degrees Fahrenheit (°F). System exhaust gases are discharged directly into the atmosphere, or can be routed through a caustic scrubber to remove HCl if the influent vapors contain chlorinated VOCs.

The FTO system for the SARS at the former Lowry AFB was designed to extract and treat chlorinated and non-chlorinated hydrocarbon vapors at flow rates between 20 and 120 standard cubic feet per minute (scfm), and to reduce the influent VOC concentrations by not less than 99.99 percent. At the SARS site, SVE vacuum was induced in the subsurface using the 15 DPE wells and a liquid-ring vacuum pump. Extracted soil vapors were then injected into the FTO unit at a regulated flow rate, passing through the static premixing chamber, and then flowing into the reaction bed where complete oxidation occurred at a temperature of approximately 1,800°F.

When the influent vapor stream reaches oxidation temperature, organic compounds react within the oxidizer vessel to form carbon dioxide, water, and (in the case of chlorinated hydrocarbons) HCl, releasing heat that is then absorbed by the ceramic matrix of the reaction bed. The system tested at the SARS included an effluent caustic scrubber that was designed to remove at least 99.5 percent of HCl from the reactor exhaust at the maximum design loading rate of approximately 3 pounds per hour (lb/hr) of HCl. Use of the scrubber was not required during the demonstration conducted at the SARS site.

The GS Series FTO unit used at this site allows for a single pass of the extracted vapors through the oxidizer at a nominal residence time of 0.5 second. A schematic of the FTO treatment process is presented on Figure 2.1. A complete process flow schematic of the FTO system is shown in the P&IDs presented in Appendix A.

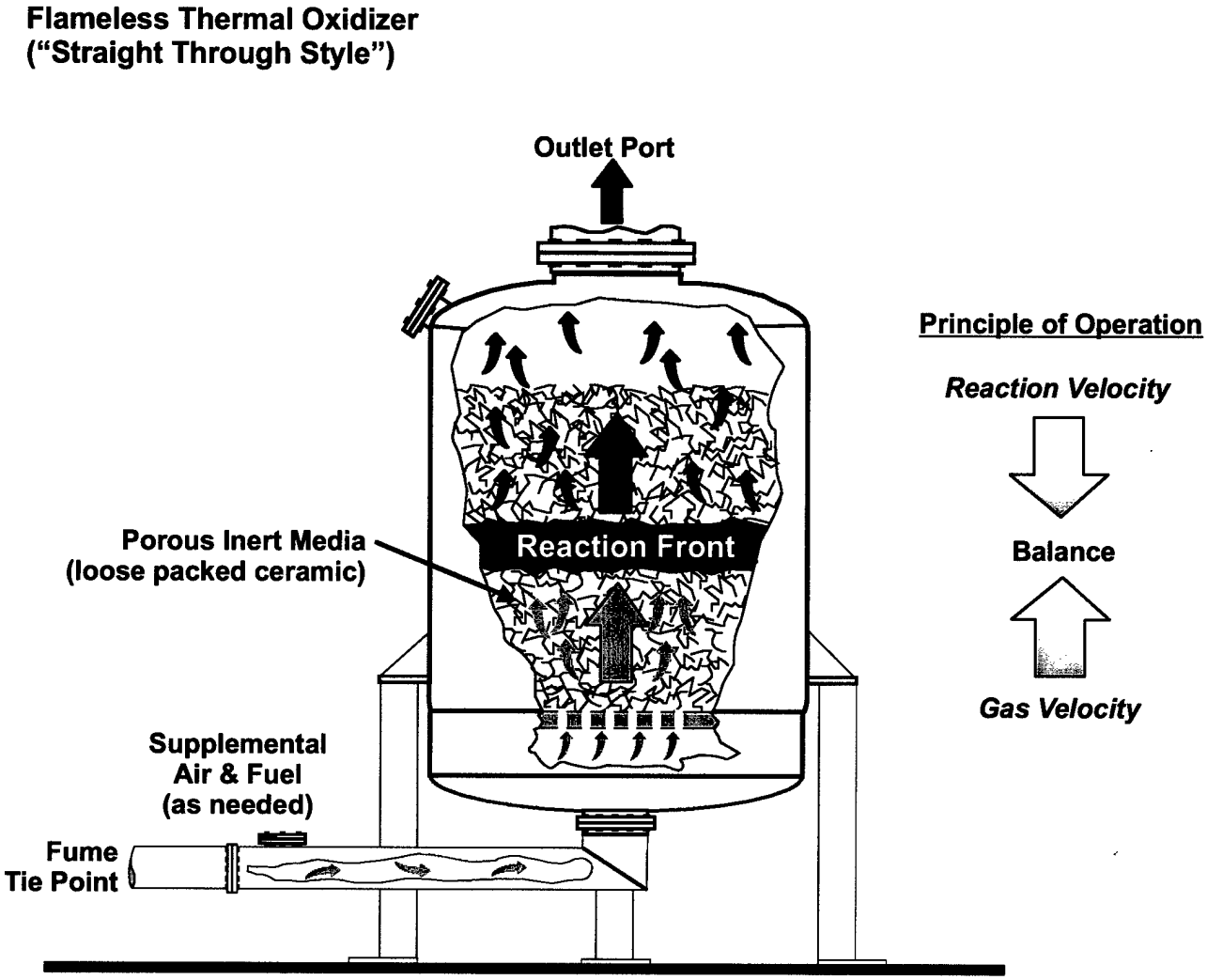


Source: Thermatrix Inc.

**FIGURE 2.1**

**SCHEMATIC OF FTO TREATMENT PROCESS**

FTO Treatment System Demonstration
Source Area Reduction System
Former Lowry AFB, Colorado

**PARSONS ENGINEERING SCIENCE, INC.**
Denver, Colorado

Corel\draw\728414a.cdr p1 nap 11/98

The FTO system is skid-mounted on a trailer with a dedicated electrical distribution system. The system is designed to operate within single-circuit, 480-volt, 3-phase, 60-amp electrical power limitations. The system is partially enclosed, with weather protection enclosures for system components that could be affected by temperature, moisture, and/or windblown particulates.

## 2.2 SYSTEM CAPABILITIES

Thermatrix manufactures a patented GS Series FTO treatment unit that incorporates a corrosion-resistant ceramic matrix and oxidizer materials that are immune to moisture and acid, noncatalytic, and have a temperature rating of up to 2,500°F. Thermatrix FTO system information is provided in Appendix A.

Based on information provided by Thermatrix, a series of tests have demonstrated the inherent safety of the FTO system (Meltzer, 1992). Conditions considered to be worst-case from a safety standpoint were investigated by Thermatrix. Flow rates and concentrations of VOCs (as propane) were varied over wide ranges. The different flow rates tested through the unit resulted in residence times ranging from 0.15 second to 10 minutes, and VOC concentrations between 1,000 and 160,000 parts per million, volume per volume (ppmv), spanning the flammability range of 5 percent of the lower explosive limit (LEL) to 170 percent of the upper explosive limit (UEL) (Meltzer, 1992). Under all test conditions, no flashback or detonation occurred.

In many flame-based devices, some of the soil vapor can bypass the flame zone, potentially resulting in the formation of products of incomplete combustion (PIC). The configuration of the flameless oxidizer is designed to eliminate these problems. The reaction zone covers the entire cross-section of the ceramic matrix, and all of the vapor must pass through the reaction zone before it exhausts from the oxidizer as carbon dioxide, water, and HCl (Figure 2.1).

Complete conversion of the VOCs into harmless byproducts and HCl occurs rapidly in the reaction zone of the FTO unit because of premixing of the contaminated influent vapors with air (oxygen), fuel (propane), and the heat-transfer properties of the ceramic matrix. Testing by Thermatrix has shown that a residence time of 0.15 second in the FTO can result in greater than 99.99 percent destruction/removal efficiency (DRE) for hydrocarbon vapors. The flameless oxidizer tested at the former Lowry AFB has a nominal residence time of 0.5 second (Thermatrix, 1992).

According to Thermatrix (1992), the FTO technology is capable of processing batch or variable-flow vapors or fumes because of the heat-retention and radiant-heat properties of the ceramic matrix design. The technology can handle VOC vapor spikes above nominal capacity, or a complete interruption in vapor flow, and remain functionally on-line with no disruption of DRE or safety concerns (as could occur with a flame blow out).

Although, influent vapors can vary in hydrocarbon concentration, a minimum of 12-percent oxygen within the influent vapor system is required to sustain the oxidation process. Because many hydrocarbon-contaminated sites have low initial soil gas oxygen levels, soil gas dilution with ambient air often is required to ensure that sufficient oxygen enters the oxidizer.

Performance tests by the manufacturer have demonstrated the 99.99-percent and greater DRE of the FTO system for a wide variety of VOCs, including chlorinated hydrocarbons (Meltzer, 1992; Thermatrix, 1992). Tests also have measured typical nitrogen oxide emissions of less than 2 ppmv, and carbon monoxide emissions of less than 10 ppmv. Single-component and mixed organic vapor streams have been successfully treated, with vapor constituents that have included benzene, carbon tetrachloride, dichloromethane, ethyl chloride, isopropanol, methane, paint solvent mixtures, propane, and toluene. These compounds are chemically representative of many of the types of industrial VOCs, including chlorinated aliphatic hydrocarbons (CAHs), that can be treated with FTO technology. The test procedures, analytical methods, and performance results for the GS Series FTO unit are detailed in a separate vendor report (Thermatrix, 1992).

## 2.3 CAPITAL EQUIPMENT

Table 2.1 provides the total capital cost for the Thermatrix GS Series FTO treatment system purchased for this demonstration program. The FTO treatment system was purchased by the Air Force from Thermatrix on a "shared-cost" basis. The Thermatrix contribution was $40,000, which was the difference between the equipment funding provided by the Air Force and the established commercial value of the FTO system. Therefore, the cost paid by the Air Force for the FTO system was $235,265, versus an actual commercial value of $275,265.

To determine the prorated capital cost for the 104-day (May 20 through September 1, 1998) former Lowry AFB demonstration, the total capital cost was averaged over an estimated 3-year life of the FTO system. Because use of the quench/scrubber was not necessary at this site, the capital cost for the demonstration excluded $62,000 for the quench/scrubber ($275,265-$62,000=$213,265). Therefore, the prorated capital cost for the 104-day demonstration was $20,255 ([$213,265/1,095 days] x 104 days). Capital and operational costs to conduct the FTO system demonstration at the former Lowry AFB are presented in Section 3.3.2.

## 2.4 REGULATORY ACCEPTANCE

Acceptance of Thermatrix FTO systems by regulatory agencies has been widespread. Agencies that have approved this technology for site remediation include state environmental agencies and local air quality districts. Based on information provided by Thermatrix, the following states have permitted (or exempted) Thermatrix FTO systems to date:

| | | |
|---|---|---|
| California | Connecticut | Idaho |
| Indiana | Kentucky | Louisiana |
| Maryland | Massachusetts | Michigan |
| Minnesota | Mississippi | Montana |
| New Jersey | New York | North Carolina |
| Ohio | Pennsylvania | South Carolina |
| Tennessee | Texas | Utah |

Also, Canada, England, France, Ireland, Japan, Netherlands, Switzerland (pending), Taiwan, R.O.C. have approved the use of this system.

## TABLE 2.1
## SUMMARY OF VENDOR CAPITAL COSTS
### FTO TREATMENT SYSTEM DEMONSTRATION
### SOURCE AREA REDUCTION SYSTEM
### FORMER LOWRY AFB, COLORADO

| Item | Cost |
|---|---|
| Thermatrix Engineering and Project Management | $16,000 |
| Basic FTO Treatment Unit | $164,000[a/] |
| Quench/Scrubber System | $62,000 |
| FTO System Trailer | $19,500 |
| SVE Blower and Knockout Drum | $3,615 |
| Electrical Equipment | $4,900 |
| Control Valves | $4,500 |
| Miscellaneous Items | $750 |
| **TOTAL** | $275,265 |

a/ This cost includes $40,000 contributed by Thermatrix for the design and fabrication of the FTO system.

To ensure compliance with the Colorado State Air Emissions Guidelines as implemented by the Colorado Department of Public Health and Environment (CDPHE) Air Pollution Control Division (APCD), Parsons ES coordinated with Versar and CDPHE APCD to ensure that relevant air emissions permitting requirements for the FTO system were met. On November 12, 1997, Parsons ES submitted the required Application for Construction Permit and Air Pollution Emission Notice (APEN) for review and approval by CDPHE APCD (see Appendix B). The APEN was submitted directly to CDPHE APCD by Parsons ES, as directed by Lowry Air Force Base Conversion Agency (AFBCA).

CDPHE APCD responded in a letter dated January 5, 1998 (see Appendix B), that based on review of the Application for Construction Permit and APEN, it was determined that an emission permit is not required because uncontrolled emissions of VOCs were estimated to be less than 2 tons per year. However, the filing of an APEN was required, because uncontrolled emissions (i.e., without use of the quench/scrubber) of hazardous air pollutants (HAPs) (i.e., HCl) were estimated to exceed the *De Minimis Levels for Non-Criteria Reportable Pollutants* (Colorado Air Quality Control Commission, 1997) of 50 pounds per year (lb/yr) or more for sources with a release point less than 10 meters high (the FTO exhaust stack height is approximately 14 feet, or 4.3 meters). Approval of the APEN by CDPHE APCD allowed up to 2,060 lb/yr of uncontrolled HAPs during the operation of the FTO system (see Appendix B).

# SECTION 3

# FIELD DEMONSTRATION RESULTS

Testing of the FTO system was conducted over an approximate 15-week period from May 20 to September 1, 1998. Fifteen DPE wells were installed by Versar (1996) at the SARS to dewater the area and to extract soil vapors. The DPE wells provided the vapors for the FTO system demonstration (see Figure 3.1).

The FTO system configuration for the field demonstration is presented in Section 3.1. Test data collected for design and operation of a full-scale system included soil vapor VOC concentrations and vapor extraction rates, described in Section 3.2. The performance of the FTO system during the demonstration at the SARS is reviewed in Section 3.3.

## 3.1 FTO SYSTEM CONFIGURATION

The trailer-mounted FTO pilot-test unit was positioned north of the SARS control building (Figure 3.1). To minimize potential vandalism, a security chain-linked fence was placed around the unit and a woven plastic material was included in the fence to obstruct the view of the unit. Power (480 volt/3 phase/60 amp) was supplied to the FTO system from a distribution panel located outside the control building. Propane, required as supplemental fuel to maintain reactor bed operating temperatures, was supplied by a local vendor. The propane was stored in a 500-gallon tank mounted on the FTO system trailer.

The tie-in point of the FTO influent vapor line to the SARS was located between the air/oil separator and the inlet to the carbon treatment canisters of the SARS. This tie-in point was on the outlet (pressure) side of the liquid-ring vacuum pump. Soil gas extracted by the SARS was diverted to the FTO unit for treatment during the demonstration. P&IDs of the FTO unit are included in Appendix A. Figure 3.2 provides photographs of the FTO system.

The FTO unit was designed to extract and treat contaminated vapors at flow rates between 20 and 120 scfm and to reduce the influent VOC concentrations by not less than 99.99 percent. The system also included an effluent caustic scrubber to remove HCl, which is formed during the thermal oxidation of chlorinated solvents. However, the scrubber was not used during operation of the FTO unit at the SARS site because estimated mass emissions of HAPs (i.e., HCl) from the FTO demonstration were estimated to be less than 2,060 lb/yr (see Appendix B, January 5, 1998 APEN approval letter from CDPHE APCD). During field testing, the influent vapor flow rate to the FTO unit was maintained at 105 cubic feet per minute (cfm) by using a combination of soil vapors and ambient air.

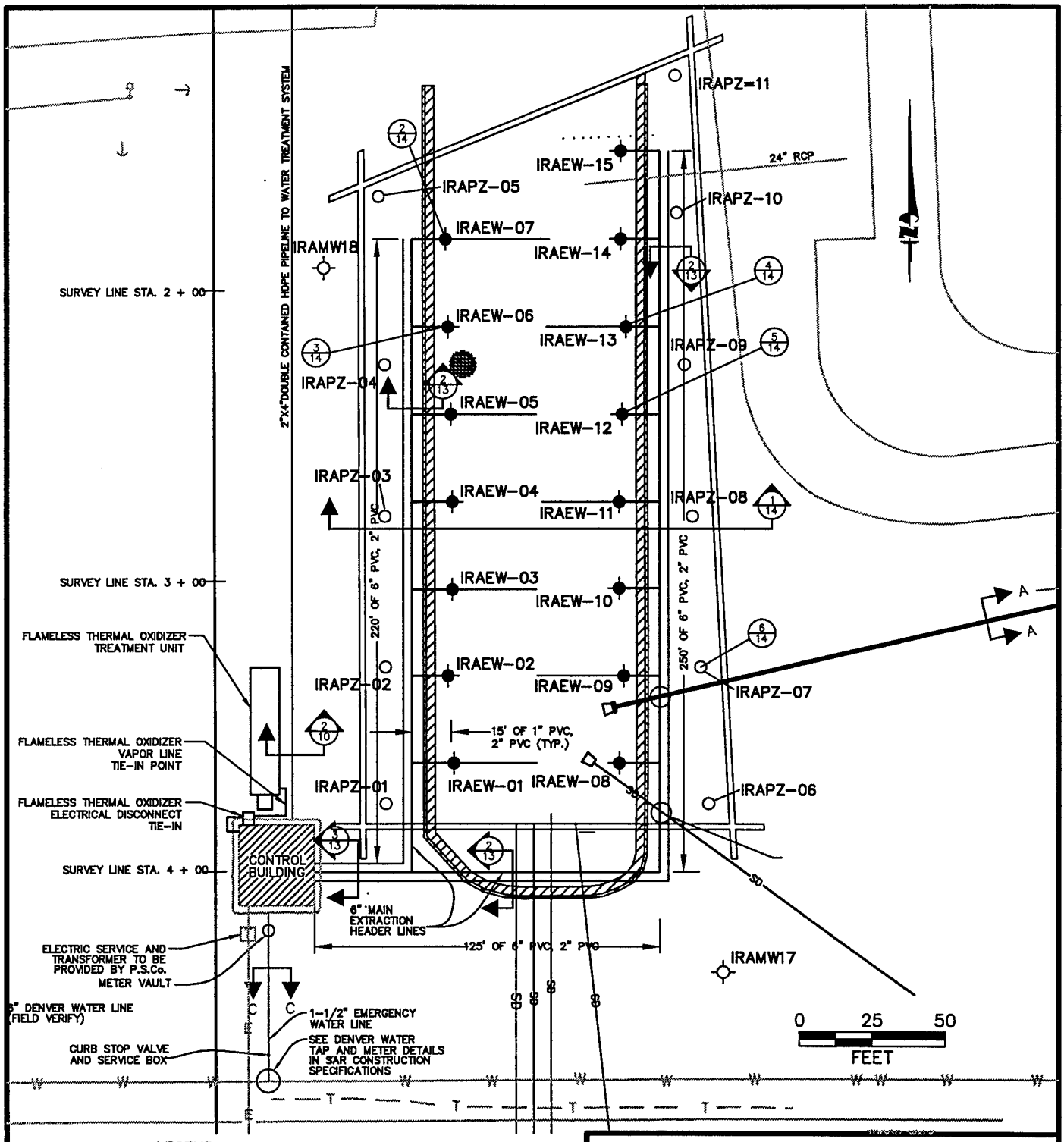


Source: VERSAR, Inc., 1996

**FIGURE 3.1**

**LAYOUT OF FTO DEMONSTRATION COMPONENTS**

FTO Treatment System Demonstration
Source Area Reduction System
Former Lowry AFB, Colorado

**PARSONS ENGINEERING SCIENCE, INC.**

Denver, Colorado

S:\ES\cad\LOWRY\97dn0913.dwg, 09/17/98 at 07:28

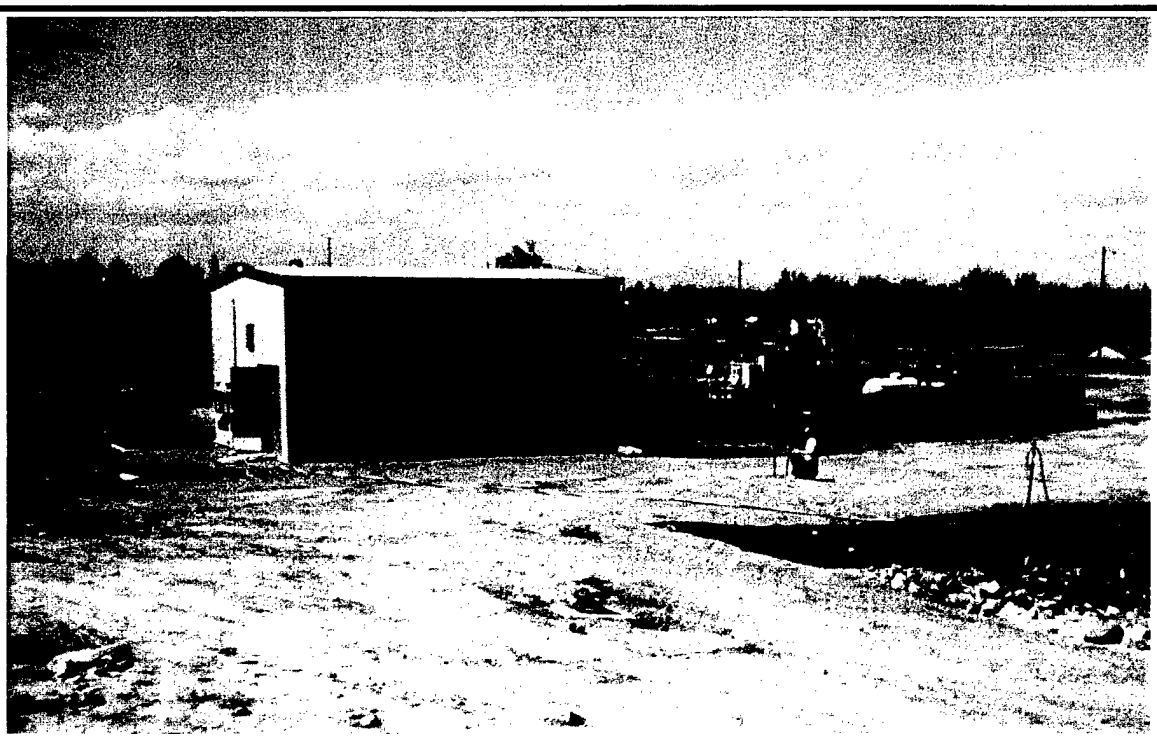

**Photograph 1. FTO Treatment System and Source Area Reduction System (SARS) Control Building**

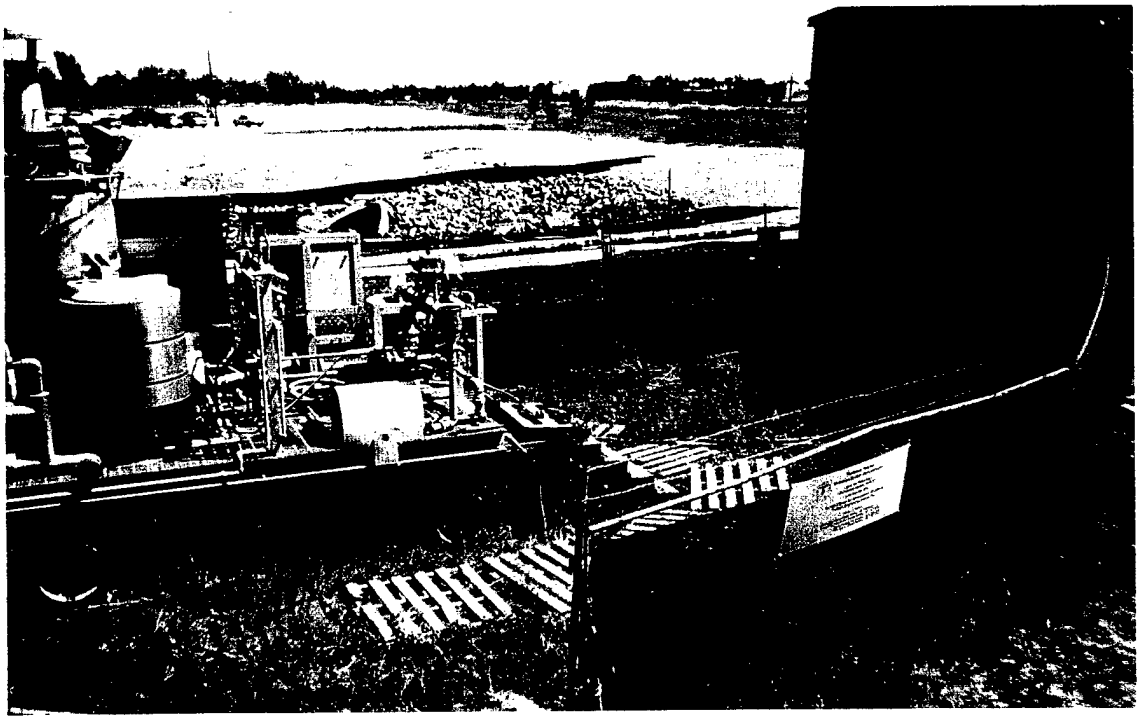

**Photograph 2. Connection of FTO Treatment System to SARS Control Building with Westerly Creek Outfall in Background.**

**FIGURE 3.2**

**PHOTOGRAPHS OF FTO SYSTEM LAYOUT**

FTO Treatment System Demonstration
Source Area Reduction System
Former Lowry AFB, Colorado

**PARSONS ENGINEERING SCIENCE, INC.**
Denver, Colorado

## 3.2 SOIL VAPOR CONCENTRATIONS AND EXTRACTION RATES

The primary chemicals of concern at the SARS site are TCE and its associated degradation products 1,1-dichloroethene (1,1-DCE), *cis*-1,2-dichloroethene (*cis*-1,2-DCE), and vinyl chloride. Tetrachloroethene (PCE) and 1,1,1-trichloroethane (1,1,1-TCA) also are present. Influent and effluent vapor sample analytical results are summarized in Table 3.1 and included in the analytical data reports presented in Appendix C. The most recent summary of field measurements is presented in Analytical Data Report No. 5 (Appendix C). Data collected during FTO testing included laboratory analytical results for influent and effluent vapor samples, analyzed using US Environmental Protection Agency (USEPA) Method TO-14 (VOCs), and SVE flow rates, to calculate mass removal and DRE.

Soil gas extracted by the SARS was diverted to the FTO unit and treated by the FTO unit during the demonstration. During the demonstration, the FTO unit treated approximately 75 to 100 percent of the total SARS flow. The total influent vapor flow to the FTO unit was maintained at 105 cfm. Approximately 80 cfm of the influent vapor flow rate was from the SARS, and approximately 25 cfm was ambient air (oxygen). The influent vapor flow rate to the FTO unit was held constant at 105 cfm by using an automatically controlled ambient air bleed-in valve, which regulated the amount of ambient air that was added to the SARS vapor stream to maintain a constant flow rate into the oxidizing zone of the FTO unit.

The concentrations of total hydrocarbon compounds (THC) reported by the laboratory in samples from the post-dilution (following the addition of ambient air) influent vapor stream ranged from 3,000 to 10,000 ppbv (Table 3.1). The concentrations of THC were referenced to heptane (molecular weight equal to 100). The concentrations of TCE detected by the laboratory in the post-dilution influent vapor stream ranged from 5,100 to 11,000 ppbv (Table 3.1). The average TCE concentration was 7,000 ppbv, which is an order of magnitude less than the TCE concentration of 54,000 ppbv that Versar estimated would be extracted by the SARS based on initial pilot test data.

During the FTO demonstration, an estimated 22.5 pounds of TCE (of an estimated total of 19.0 pounds of THC) were recovered from the soil over a total of 60.1 days of extraction. This is equivalent to 0.37 pounds per day (lb/day) TCE and approximately 0.32 lbs per day THC. The estimated pounds of THC recovered is less than the estimated pounds of TCE, because the concentration of THC was referenced to heptane (molecular weight = 100) instead of a heavier molecular weight chemical (e.g., TCE, with a molecular weight of 131.4), which would have been more appropriate for the chlorinated vapor stream present at the SARS site. Based on pilot test data and prior to startup of the SARS, Versar had estimated the total VOC extraction rate to be 13 lbs/day.

Several unexpected VOCs were detected by the analytical laboratory in the May 20, 1997 pre-dilution influent sample. These compounds include 2-butanone and tetrahydrofuran. In addition, 1,2,4-trimethylbenzene, 2-butanone, m,p-xylenes, o-xylene, tetrahydrafuran, 1,4-dioxane, and toluene were detected in the effluent gas sample collected on May 20, 1997. Tetrahydrafuran is a solvent for high-grade polymers, especially polyvinyl chloride (PVC) (MERCK and Co, Inc. 1983), and may be generated from the incomplete combustion of PVC solvent welding compounds that were used to connect the FTO unit to the SVE system. No unexpected VOCs were detected in influent or effluent samples on May 22, 1998.

**TABLE 3.1**
**DETECTED ANALYTES IN EXTRACTED VAPOR STREAM SAMPLES**
**MAY TO AUGUST 1998**
**FTO TREATMENT SYSTEM DEMONSTRATION**
**SOURCE AREA REDUCTION SYSTEM**
**FORMER LOWRY AFB, COLORADO**

| | Detected Concentration (ppbv)[a] | | | | | | | | | | | | | | | | | | | | | | |
|---|---|---|---|---|---|---|---|---|---|---|---|---|---|---|---|---|---|---|---|---|---|---|---|
| Analyte | Pre-Dilution Influent Sample SARS-IK01-80 5/20/98 | Post Dilution Influent Sample SARS-IOX1-105 5/20/98 | Effluent Sample SARS-EOX1-105 5/20/98 | Destruction Efficiency (percent) | Post Dilution Influent Sample SARS-IOX2-105 5/22/98 | Effluent Sample SARS-EOX2-105 5/22/98 | Destruction Efficiency (percent) | Post Dilution Influent Sample SARS-IOX3-105 6/18/98 | Effluent Sample SARS-EOX3-105 6/18/98 | Destruction Efficiency (percent) | Post Dilution Influent Sample SARS-IOX4-105 7/21/98 | Effluent Sample SARS-EOX4-105 7/21/98 | Destruction Efficiency (percent) | Effluent Sample Equipment Blank EB-1 7/21/98 | Post Dilution Influent Sample SARS-IOX5-105 8/10/98 | Effluent Sample SARS-EOX5-105 8/10/98 | Destruction Efficiency (percent) | Post Dilution Influent Sample SARS-IOX6-105 8/27/98 | Effluent Sample SARS-EOX6-105 8/27/98 | Destruction Efficiency (percent) | Effluent Sample Equipment Blank EB-1 8/27/98 |
| **Freon 12** | <53[b] | <35 | <5.4 | NA[c] | <42 | <5.3 | NA | <25 | <5.1 | NA | <37 | <5.4 | NA | <5.1 | <25 | <5.3 | NA | <21 | <5.7 | NA | 20 |
| **Vinyl chloride** | 120 | 100 | <5.4 | >99.99 | 100 | <5.3 | >99.99 | 96 | <5.1 | >99.99 | 100 | <5.4 | >99.99 | <5.1 | 71 | <5.3 | >99.99 | 180 | <5.7 | >99.99 | <4.9 |
| **1,1-Dichlorothene** | 280 | 210 | <5.4 | >99.99 | 200 | <5.3 | >99.99 | 150 | <5.1 | >99.99 | 260 | <5.4 | >99.99 | <5.1 | 130 | <5.3 | >99.99 | 180 | <5.7 | >99.99 | <4.9 |
| **Methylene chloride** | 130 | 110 | <5.4 | >99.99 | 100 | <5.3 | >99.99 | 66 | <5.1 | >99.99 | 100 | <5.4 | >99.99 | 6.3 | 120 | <5.3 | >99.99 | 69 | <5.7 | >99.99 | <4.9 |
| **1,1-Dichlorothane** | <53 | <35 | <5.4 | NA | <42 | <5.3 | NA | <25 | <5.1 | NA | 47 | <5.4 | >99.99 | <5.1 | <25 | <5.3 | NA | 35 | <5.7 | >99.99 | <4.9 |
| **cis-1,2-Dichloroethene** | 940 | 700 | <5.4 | >99.99 | 680 | <5.3 | >99.99 | 480 | <5.1 | >99.99 | 1500 | <5.4 | >99.99 | <5.1 | 760 | <5.3 | >99.99 | 960 | <5.7 | >99.99 | <4.9 |
| **1,1,1-Trichloroethane** | 860 | 650 | <5.4 | >99.99 | 650 | <5.3 | >99.99 | 650 | <5.1 | >99.99 | 930 | <5.4 | >99.99 | <5.1 | 460 | <5.3 | >99.99 | 540 | <5.7 | >99.99 | <4.9 |
| **Tetrachloroethene** | 210 | 160 | <5.4 | >99.99 | 180 | <5.3 | >99.99 | 140 | <5.1 | >99.99 | 280 | 10 | 96.43 | 11 | 180 | <5.3 | >99.99 | 120 | <5.7 | >99.99 | <4.9 |
| **Toluene** | <53 | <35 | 7.2 | NA | <42 | <5.3 | NA | <25 | <5.1 | NA | <37 | <5.4 | NA | <5.1 | <25 | <5.3 | NA | <21 | <5.7 | NA | <4.9 |
| **m,p-Xylenes** | <53 | <35 | 12 | NA | <42 | <5.3 | NA | <25 | <5.1 | NA | <37 | <5.4 | NA | <5.1 | <25 | <5.3 | NA | <21 | <5.7 | NA | <4.9 |
| **o-Xylene** | <53 | <35 | 6 | NA | <42 | <5.3 | NA | <25 | <5.1 | NA | <37 | <5.4 | NA | <5.1 | <25 | <5.3 | NA | <21 | <5.7 | NA | <4.9 |
| **1,2,4-Trimethylbenzene** | <53 | <35 | 6.1 | NA | <42 | <5.3 | NA | <25 | <5.1 | NA | <37 | <5.4 | NA | <5.1 | <25 | <5.3 | NA | <21 | <5.7 | NA | <4.9 |
| **Acetone** | <210 | <140 | <22 | NA | <170 | <21 | NA | <99 | 23 | NA | <150 | 23 | NA | <20 | <100 | <21 | NA | <84 | <23 | NA | <20 |
| **2-Butanone** | 300 | <140 | <22 | NA | <170 | <21 | NA | <99 | <20 | NA | <150 | <22 | NA | <20 | <100 | <21 | NA | <84 | <23 | NA | <20 |
| **Tetrahydrofuran** | 960 | <140 | 38 | NA | <170 | <21 | NA | <99 | <20 | NA | <150 | <22 | NA | <20 | <100 | <21 | NA | <84 | <23 | NA | <20 |
| **Cyclohexane** | <210 | <140 | 23 | NA | <170 | <21 | NA | <99 | <20 | NA | <150 | <22 | NA | <20 | <100 | <21 | NA | <84 | <23 | NA | <20 |
| **1,4-Dioxane** | <210 | <140 | 24 | NA | <170 | <21 | NA | <99 | <20 | NA | <150 | <22 | NA | <20 | <100 | <21 | NA | <84 | <23 | NA | <20 |
| **Trichloroethene** | 9200 | 7000 | <5.4 | >99.99 | 6900 | 9.8 | 99.86 | 6200 | <20 | >99.99 | 11000 | <5.4 | >99.99 | 6 | 5100 | <5.3 | >99.99 | 5500 | <5.7 | >99.99 | <4.9 |
| **THC[d]** | 15000 | 9500 | 540 | 94.32 | 8900 | <53 | >99.99 | 9400 | 96 | 98.98 | 8500 | <54 | >99.99 | <51 | 3000 | <53 | >99.99 | 10000 | <57 | >99.99 | 75 |

[a] ppbv = parts per billion by volume, as determined by Air Toxics, Folsom, CA using USEPA Method TO-14 GC/MS Full Scan. See Table 3.4 for field measurements and system operating conditions at the time of sampling.

[b] < = Compound not detected, value shown represents the reporting limit.

[c] NA = Not applicable.

[d] THC = Total hydrocarbon compounds referenced to heptane (molecular weight = 100).

As observed at two previous demonstration sites located at Plattsburgh AFB and Air Force Plant 4, the detection of unexpected compounds in the samples was not a continuing problem, with the exception of acetone, which was detected in the effluent sample on July 21, 1998 (Table 3.1). It is possible that acetone was present in the influent sample, but at a concentration less than the laboratory reporting (detection) limit (<150 ppbv) for the influent sample. The detected concentration in the effluent sample was 23 ppbv. However, if acetone is a site-related compound, it should be removed by the FTO treatment system. Air Toxics, the analytical laboratory, does not believe that acetone is a laboratory-related contaminant. Therefore, the detection of acetone may be attributed to residual contamination within the stainless steel tubing or the Tygon® tubing attached to the SUMMA® canister.

The July 21, 1998 sampling event also included an equipment blank sample of the stainless steel tubing used to collect effluent samples. The equipment blank sample was collected after the stainless steel tube was purged for approximately 3 to 4 minutes. Methylene chloride, PCE, and TCE were detected in the equipment blank sample at concentrations of 6.3, 11, and 6 ppbv, respectively. These results indicated that the stainless steel tubing was contaminated. Therefore, this tubing was replaced before the August 27, 1998 sampling event, and another equipment blank sample was collected using the new tubing. Freon 12 (20 ppbv) and THC (75 ppbv) were detected in the August 27, 1998 equipment blank sample (Table 3.1). The detection of THC may be attributed to residual contamination within the stainless steel tubing or the Tygon® tubing attached to the SUMMA® canister. Therefore, the detection of acetone may be attributed to residual contamination.

## 3.3 OBSERVED FTO PERFORMANCE

The performance of the Thermatrix FTO system was evaluated based on three primary criteria: treatment efficiency, relative cost, and reliability and maintainability. Performance evaluation results are presented in the following subsections.

### 3.3.1 Vapor Treatment Efficiency

FTO vapor treatment efficiencies for THC and all detected VOCs are presented in Table 3.1, and were calculated using the following equation:

$$\text{Treatment Efficiency} = \frac{\text{Concentration}_{\text{Influent}} - \text{Concentration}_{\text{Effluent}}}{\text{Concentration}_{\text{Influent}}} \times 100$$

The vapor treatment efficiency of the Thermatrix FTO system was evaluated using analytical results for samples collected during May, June, July, and August 1998. The influent and effluent vapor streams of the FTO unit were sampled using 1-liter SUMMA® canisters, and samples were analyzed by Air Toxics, Ltd. of Folsom, California for VOCs using USEPA Method TO-14. A summary of the range of FTO treatment efficiencies for targeted compounds is presented below in Table 3.2.

**TABLE 3.2**
**SUMMARY OF FTO TREATMENT EFICIENCIES**
**FTO TREATMENT SYSTEM DEMONSTRATION**
**SOURCE AREA REDUCTION SYSTEM**
**FORMER LOWRY AIR FORCE BASE, COLORADO**

| Analyte | Range of DRE[a/] (percent) |
|---|---|
| Vinyl chloride | >99.99 |
| 1,1-Dichloroethene | >99.99 |
| *cis*-1,2-Dichloroethene | >99.99 |
| 1,1,1-Trichloroethane | >99.99 |
| Tetrachloroethene | 96.43 to >99.99 |
| Trichloroethene | 99.86 to >99.99 |
| THC[b/] | 94.32 to >99.99 |

a/ DRE=destruction/removal efficiency.

b/ THC=total hydrocarbon compounds referenced to heptane (molecular weight=100).

### 3.3.2 Operating Costs

The costs for the FTO system demonstration are summarized in Table 3.3. The total cost for the FTO system monitoring and operation for a total of 104 days during the period from May 20, 1998 to September 1, 1998, was $81,498, which is equivalent to $784 per day. During the field demonstration, a total of 19 pounds of THC vapors were recovered from site soils during 60 days of actual vapor extraction (0.32 lbs/day). The treatment costs per pound of THC recovered ranged from $2,475.79 per pound [($784 x 60 days of extraction/19 pounds)] to $4,291.37 per pound ($784 x 104 days on site/19 pounds). During this demonstration, influent THC concentrations from the DPE wells ranged from 3,000 to 10,000 ppbv (Table 3.1).

A total of 22.5 pounds of TCE vapors were recovered from site soils during 60 days of vapor extraction (0.37 lbs per day). The treatment costs per pound of TCE recovered ranged from $2,090.67 per pound ($784 x 60 days of extraction/22.5 pounds) to $3,623.82 per pound ($784 x 104 days on site/22.5 pounds). During this demonstration, influent TCE concentrations from the DPE wells ranged from 5,100 to 11,000 ppbv (Table 3.1).

Due to the low influent VOC concentrations at this site, the FTO system was operating at less than 1 percent of the designed loading rate, which dramatically increased the cost per pound. The maximum influent loading rate to the FTO system can range up to 880 lb/day, depending on emission limitations established by the regulatory agency and/or whether or not the quench/scrubber is required.

Approximately 2 labor hours per week were required for onsite system monitoring. System monitoring included checking various system parameters, including oxidizer temperatures, supplemental fuel consumption, and liquid levels in the condensate knockout drum. Generally, each visit required 30 minutes on site or less, depending on whether any parameter required adjustment. Supplemental fuel (i.e., propane) was delivered to the site by a local supplier.

Sampling of the system influent and effluent vapor samples required approximately 2 hours per event. Typical monthly sampling (once per month) and system monitoring totaled approximately 8 to 10 hours per month, if no unexpected shutdowns occur.

## TABLE 3.3
## SUMMARY OF FTO TECHNOLOGY DEMONSTRATION COSTS
### FTO TREATMENT SYSTEM DEMONSTRATION
### SOURCE AREA REDUCTION SYSTEM
### FORMER LOWRY AFB, COLORADO

| Interagency WBS #[a/] | Cost Item | Subtotal |
|---|---|---|
| 33-07 | Capital Costs[b/] | $20,255 |
| 33-01-XX-01-05 | Transportation of Treatment Unit to Site | $3,200 |
| 33-14-XX-01-05 | Thermatrix Mobilization and Startup[c/] | $8,106 |
| 33-01-XX-01-06 | Mobilization/Startup Labor | $18,187 |
| 33-14-XX-01-06 | Analytical | $2,931 |
| 33-14-XX-01-08 | Sampling/Operating Labor | $15,496 |
| 33-14-XX-01-08 | Other Direct Costs[d/] | $5,972 |
| 33-14-XX-01-08 | Electricity[e/] | $ 606 |
| 33-14-XX-01-08 | Propane[f/] | $2,076 |
| 33-21-XX-01-12 | Transportation of Treatment Unit from Site | $ 2,463 |
| 33-21-XX-01-12 | Demobilization Labor | $ 2,206 |
| | **TOTAL** | **$81,498** |

a/ WBS=Work breakdown structure. (USEPA, 1995).

b/ Daily capital cost based on is the total vendor capital costs averaged over an estimated 3-year life of the FTO system [($213,265/1,095 days) x 104 days = $20,255].

c/ Includes service performed by Thermatrix at the former Lowry AFB during the week of April 20, 1998.

d/ Other direct costs include security alarm, fence, travel, per diem, and supplies.

e/ Excludes power costs for site SVE blower and assumes $0.08 per kilowatt hour.

f/ Costs based on actual propane use and average cost of $0.60 per gallon.

Excluding electrical costs for the 6-horsepower SVE blower, approximately 7,574 kilowatts of electricity were used during system operation.

The electrical costs for the SVE blower were excluded because the SVE blower is required for any vapor extraction system, and the cost comparison was intended to compare the FTO technology to other vapor treatment technologies. Based on approximately 1,456 of hours of FTO system operation and a cost of $0.08 per kilowatt hour, the total electricity cost was approximately $605.95. Approximately 3,460 gallons of propane was consumed during the demonstration. At an average cost of $0.60 per gallon, including delivery, the total cost of propane was $2,076. Costs for mobilization/demobilization of the FTO system, including transportation of the unit to and from site and system startup (by Parsons ES and Thermatrix), were $34,162. These costs included service performed on the unit by Thermatrix at the former Lowry AFB prior to beginning the FTO demonstration. Costs for collection of soil vapor samples, laboratory analyses (analytical), and associated operations and maintenance costs were $18,249.

### 3.3.3 Reliability and Maintainability

The FTO treatment unit was mobilized to the SARS on March 10, 1998, however the SARS was not operational until May 1998. In April 1998, the unit was prepared for startup. During the week of April 20, 1998, Thermatrix repaired the differential pressure transmitter. Moisture had entered the differential pressure transmitter, and the transmitter circuit board and wiring became corroded, causing a malfunction. Startup and optimization of the FTO system was conducted by Parsons ES between May 18 and 20, 1998. The FTO unit began treating soil vapors from the SARS at 0800 hours on May 20, 1998. The extended operation and monitoring of the FTO system was conducted from May 20 to September 1, 1998.

During the time period from May 20 to September 1, 1998, the FTO treatment system operated for 1,456.6 hours, with an overall operational run time of approximately 57 percent, as shown in Table 3.4. All but 2 percent of the downtime was associated with problems external to the FTO unit. External problems causing FTO unit shutdowns included: 1) power outages at the Base; 2) shutdowns of the SARS, which caused the FTO unit to shut down due to low flow to the oxidizer; 3) shutdowns of the SARS for maintenance; and 4) high water level in the condensate knockout drum. Shutdown of the FTO unit due to power outages resulted primarily from severe electrical storms that caused power outages throughout the Base. Also, two shutdowns of the FTO unit were caused by work being performed on the electrical transmission lines at the Base by an electrical subcontractor. Between July 8, 1998 (1652 hours) and July 13, 1998 (1715 hours), the FTO unit had been shut down awaiting restart of the SARS, which had been shut down for maintenance.

On June 4 and June 18, 1998, the FTO unit shut down due to high water level in the condensate knockout drum. On July 8, 1998, a second condensate knockout drum with approximately 45-gallons of storage capacity was installed adjacent to and below the existing condensate knockout drum. The condensate knockout drums were connected with a 0.5-inch hose that gravity fed collected condensate to the lower condensate knockout drum prior to the first drum being filled.

One internal problem caused two shutdowns of the FTO unit due to low flow to the oxidizer. During the weeks of August 17 and 24, 1998, condensate collected in the 0.25-inch stainless steel tubing that connects to the flow meter transducer at the inlet to the oxidizer.

## TABLE 3.4
## FIELD MEASUREMENTS AND SYSTEM OPERATING CONDITIONS
### FTO TREATMENT SYSTEM DEMONSTRATION
### SOURCE AREA REDUCTION SYSTEM
### FORMER LOWRY AFB, COLORADO

| Date[a] | Time | Possible Run Time (hours) | Cumulative Possible Run Time (hours) | Run Time Meter (hours) | Run Time Since Last Event (hours) | Cumulative Run Time[b] (hours) | Cumulative Down Time Due To Unit Problems (hours) | Cummulative Down Time Due To External Problems (hours) | Isolated Down Time (hours) | Flow Rate Into Oxidizer (scfm) | Fume Portion of Flow (percent) | Ambient Portion of Flow (percent) | Comments |
|---|---|---|---|---|---|---|---|---|---|---|---|---|---|
| 5/20/98 | 0800 | 0 | 0 | NR[c] | 0 | 0.0 | 0.0 | 0.0 | | 105 | 75 | 25 | Collected SARS-IKO1-80, SARS-IOX1-105, and SARS-EOX1-105 |
| 5/21/98 | 1017 | 26.2 | 26.2 | 5725.0 | 26.2 | 26.2 | 0.0 | 0.0 | | | | | |
| 5/22/98 | 1030 | 24.2 | 50.4 | NR | 24.2 | 50.4 | 0.0 | 0.0 | | 105 | 75 | 25 | Collected SARS-IOX2-105 and SARS-EOX2-105 |
| 5/26/98 | 0200 | 87.5 | 137.9 | 5841.8 | 87.5 | 137.9 | 0.0 | 0.0 | | | | | System down due to power outage |
| 5/28/98 | 0910 | 55.2 | 193.1 | 5841.8 | 0.0 | 137.9 | 0.0 | 55.2 | 55.2 | 105 | 75 | 25 | System restart |
| 6/3/98 | 1622 | 151.3 | 344.4 | 5993.1 | 151.3 | 289.2 | 0.0 | 55.2 | | | | | System down due to SARS shut-down resulting in low flow |
| 6/4/98 | 0712 | 14.8 | 359.2 | 5993.1 | 0.0 | 289.2 | 0.0 | 69.9 | 14.8 | 105 | 75 | 25 | System restart |
| 6/4/98 | 2242 | 15.5 | 374.7 | 6008.6 | 15.5 | 304.7 | 0.0 | 69.9 | | | | | System down due to high water level in moisture seperator |
| 6/10/98 | 0655 | 128.2 | 502.9 | 6008.6 | 0.0 | 304.7 | 0.0 | 198.1 | 128.2 | 105 | 75 | 25 | System restart |
| 6/18/98 | 0900 | 186.7 | 689.6 | 6195.3 | 186.7 | 491.4 | 0.0 | 198.1 | | 105 | 75 | 25 | Collected SARS-IOX3-105 and SARS-EOX3-105 |
| 6/21/98 | 1813 | 275.3 | 778.2 | 6283.9 | 275.3 | 580.0 | 0.0 | 198.1 | | | | | System down due to high water level in moisture seperator |
| 6/23/98 | 1000 | 39.8 | 818 | 6283.9 | 0.0 | 580.0 | 0.0 | 238.0 | 39.8 | 105 | 75 | 25 | System restart |
| 7/8/98 | 1700 | 367.1 | 1185.1 | 6651.0 | 367.1 | 947.1 | 0.0 | 238.0 | | | | | System down due to power outage |
| 7/13/98 | 1225 | 115.5 | 1300.6 | 6651.0 | 0.0 | 947.1 | 0.0 | 353.5 | 115.5 | 105 | 75 | 25 | System restart |
| 7/15/98 | 1025 | 46 | 1346.6 | 6697.0 | 46.0 | 993.1 | 0.0 | 353.5 | | | | | System down due to power outage |
| 7/21/98 | 0900 | 142.6 | 1489.2 | 6697.0 | 0.0 | 993.1 | 0.0 | 496.1 | 142.6 | 105 | 75 | 25 | System restart, Collected SARS-IOX4-105 and SARS-EOX4-105 and EB-1 |
| 7/24/98 | 1930 | 82.5 | 1571.7 | 6779.5 | 82.5 | 1075.6 | 0.0 | 496.1 | | | | | System down due to power outage |
| 7/28/98 | 0800 | 84.5 | 1656.2 | 6779.5 | 0.0 | 1075.6 | 0.0 | 580.6 | 84.5 | 105 | 75 | 25 | System restart |
| 7/30/98 | 0110 | 41.2 | 1697.4 | 6820.7 | 41.2 | 1116.8 | 0.0 | 580.6 | | | | | System down due to power outage |
| 8/3/98 | 0805 | 102.9 | 1800.3 | 6820.7 | 0.0 | 1116.8 | 0.0 | 683.5 | 102.9 | 105 | 75 | 25 | System restart |
| 8/7/98 | 1017 | 98.2 | 1898.5 | 6918.9 | 98.2 | 1215.0 | 0.0 | 683.5 | | | | | System down due to power outage |
| 8/10/98 | 0935 | 71.3 | 1969.8 | 6918.9 | 0.0 | 1215.0 | 0.0 | 754.8 | 71.3 | 105 | 80 | 20 | System restart, Collected SARS-IOX5-105 and SARS-EOX5-105 |
| 8/10/98 | 1736 | 8.1 | 1977.9 | 6927.0 | 8.1 | 1223.1 | 0.0 | 754.8 | | | | | System down due to power outage |
| 8/12/98 | 0910 | 39.5 | 2017.4 | 6927.0 | 0.0 | 1223.1 | 0.0 | 794.3 | 39.5 | 105 | 75 | 25 | System restart |
| 8/13/98 | 1316 | 28.1 | 2045.5 | 6955.1 | 28.1 | 1251.2 | 0.0 | 794.3 | | | | | System down due to power outage |
| 8/17/98 | 0914 | 68.0 | 2113.5 | 6955.1 | 0.0 | 1251.2 | 0.0 | 862.3 | 68.0 | 105 | 75 | 25 | System restart |
| 8/19/98 | 0420 | 43.1 | 2156.6 | 6998.2 | 43.1 | 1294.3 | 0.0 | 862.3 | | | | | System down due to low flow FALL-206 |
| 8/19/98 | 0938 | 5.3 | 2161.9 | 6998.2 | 0.0 | 1294.3 | 5.3 | 862.3 | 5.3 | 105 | 75 | 25 | System restart |
| 8/19/98 | 2050 | 11.2 | 2173.1 | 7009.4[d] | 11.2 | 1305.5 | 5.3 | 862.3 | | | | | System down due to power outage |
| 8/24/98 | 0727 | 106.6 | 2279.7 | 0.0 | 0.0 | 1305.5 | 5.3 | 968.9 | 106.6 | 105 | 75 | 25 | System restart |
| 8/24/98 | 1640 | 9.2 | 2288.9 | 9.2 | 9.2 | 1314.7 | 5.3 | 968.9 | | | | | System down due to low flow FALL-206 |
| 8/26/98 | 1619 | 47.7 | 2336.6 | 9.2 | 0.0 | 1314.7 | 53.0 | 968.9 | 47.7 | 105 | 75 | 25 | System restart |
| 8/27/98 | 1006 | 17.8 | 2354.4 | 27.1 | 17.8 | 1332.5 | 53.0 | 968.9 | | | | | Collected SARS-IOX6-105 and SARS-EOX6-105 and EB-2 |
| 9/1/98 | 1413 | 124.1 | 2478.5 | 151.2 | 124.1 | 1456.6 | 53.0 | 968.9 | | 105 | 75 | 25 | FTO unit is shut down. Conclusion of FTO demonstration and sampling. |

**Cumulative Operational Efficiency = 57%**
**Unit Problems/Operational Efficiency = 98%**
**External Problems/Operational Efficiency = 61%**

[a] Vapors from IRAEW-01 through IRAEW-15 were being treated.

[b] Cumulative run time includes time during start-up (i.e., purge, preheat, cool bed, and profile modes).

[c] NR = not recorded.

[d] This hour meter reading corresponds with Advanced Security Technologies call to Parsons ES. The hour meter was broken.

This problem was resolved on August 26, 1998. Additional information pertaining to the nature of these shutdowns is included in the analytical data reports provided in Appendix C.

Regular monthly maintenance for the Thermatrix FTO system is minimal. Because the unit is relatively simple to operate, Base personnel (technicians) can be trained to perform regular maintenance. Regular maintenance, which required 1 to 3 hours per week, typically included checking the supplemental fuel supply and emptying the condensate knockout drums. If supplemental fuel is supplied from a storage tank, then fuel levels must be monitored, and the tank must be kept full by a supplier to ensure uninterrupted system operation. The condensate knockout tank must be monitored and emptied on a regular basis. If the scrubber is used, it requires regular maintenance/ adjustments and may require an additional 2 hours per week of monitoring and flow adjustment.

## 3.4 TECHNOLOGY PERFORMANCE SUMMARY

The treatment efficiency results indicate that the FTO unit was between 99.86- and 100-percent efficient at removing TCE and between 94.32- and 100-percent efficient at removing THC from extracted soil vapors (Table 3.1). The treatment efficiencies represent the percent reduction in concentrations of constituents detected by the laboratory in the FTO system influent and effluent vapor streams.

The total cost for the FTO system monitoring and operation for a total of 104 days during the period from 20 May 1998 to 1 September 1998, was $81,498, which is equivalent to $784 per day (Table 3.3). During the field demonstration, a total of 19 pounds of THC vapors was removed from site soils during 60 days of vapor extraction (Table 3.5). The treatment costs ranged from $2,475.79 per pound of THC removed (based on 60 days of vapor extraction) to $4,291.37 per pound (based on 104 days on site). During this pilot study, influent THC concentrations from the wells ranged from 3,000 to 10,000 ppbv. A total of 22.5 pounds of TCE vapors was removed from the site soils during 60 days of vapor extraction (Table 3.6). The treatment costs ranged from $2,090.67 per pound of TCE removed (based on 60 days of vapor extraction) to $3,623.82 per pound (based on 104 days on site). During this pilot study, influent TCE concentrations from the wells ranged from 5,100 to 11,000 ppbv.

The Thermatrix FTO system is designed to operate unmanned; however, approximately 12 hours per month should be anticipated for maintenance and monitoring activities. System checks, influent/effluent sampling, disposal of condensate, and supplemental fuel monitoring will require approximately 3 hours of technician labor each week, which is equivalent to approximately 12 hours per month.

Recommendations for improvements to the FTO unit include an automated control for monitoring and maintaining influent oxygen concentrations at a minimum of 12-percent oxygen using ambient air. The automated oxygen control sensor should be tied into the primary influent vapor line, following the ambient air bleed-in valve, in order to make appropriate adjustments to the oxygen concentration. The unit should be connected to a reliable power source that is not affected by electrical storms.

Based on the DREs, the FTO unit was an effective method for treating chlorinated solvent-contaminated vapors at the SARS site. However, the concentration of total VOCs (i.e., THC) was not sufficient to make the FTO a cost-effective vapor treatment technology at the SARS site. This is described further in the next section.

# TABLE 3.5
## TOTAL HYDROCARBON MASS REMOVAL AND EMISSIONS
### FTO TREATMENT SYSTEM DEMONSTRATION
### SOURCE AREA REDUCTION SYSTEM
### FORMER LOWRY AFB, COLORADO

| Date Sampled | Extraction Wells | Days of Operation | Influent THC[a/] Concentration (ppmv)[b/] | Influent THC[a/] Concentration (µg/L)[c/] | Flow Rate (scfm) | Effluent THC Concentration (ppmv) | Effluent THC Concentration (µg/L) | Pounds of THC Removed | Total Daily THC Emissions (pounds/day) |
|---|---|---|---|---|---|---|---|---|---|
| 5/20/98 | IRAEW 01-15 | 0.2 | 9.5 | 39 | 105 | 0.5 | 2 | 0.07 | 0.021 |
| 5/22/98 | IRAEW 01-15 | 2.0 | 8.9 | 37 | 105 | <0.05 | < 0.22 | 0.70 | 0.0021 |
| 6/18/98 | IRAEW 01-15 | 18.4 | 9.4 | 39 | 105 | 0.10 | < 0.41 | 6.77 | 0.0039 |
| 7/21/98 | IRAEW 01-15 | 21.0 | 8.5 | 35 | 105 | <0.05 | < 0.22 | 6.99 | 0.0021 |
| 8/10/98 | IRAEW 01-15 | 10.0 | 3.0 | 12 | 105 | <0.05 | < 0.22 | 1.17 | 0.0021 |
| 8/27/98 | IRAEW 01-15 | 4.5 | 10.0 | 42 | 105 | <0.05 | < 0.22 | 1.76 | 0.0021 |
| 9/1/98[d/] | IRAEW 01-15 | 4.0 | 10.0 | 42 | 105 | <0.05 | < 0.22 | 1.57 | 0.0021 |
| | **Total =** | **60.1** | | | | | **Total =** | **19.0** | |

[a/] Values given are for total hydrocarbon compounds (THC) referenced to heptane (molecular weight =100) after addition of dilution air.

[b/] ppmv = parts per million by volume, as determined by the analytical laboratory.

[c/] µg/L = micrograms per liter, as determined by the analytical laboratory.

[d/] September 1, 1998 was the conclusion of the FTO demonstration; samples were not collected at this time. The August 27, 1998 TVH concentrations were used to estimate the pounds of THC removed.

# TABLE 3.6
## TRICHLOROETHENE MASS REMOVAL AND EMISSIONS
### FTO TREATMENT SYSTEM DEMONSTRATION
### SOURCE AREA REDUCTION SYSTEM
### FORMER LOWRY AFB, COLORADO

| Date Sampled | Extraction Wells | Days of Operation | Influent TCE[a] Concentration (ppmv)[b] | Influent TCE[a] Concentration (µg/L)[c] | Flow Rate (scfm) | Effluent TCE Concentration (ppmv) | Effluent TCE Concentration (µg/L) | Pounds of TCE Removed | Total Daily TCE Emissions (pounds/day) |
|---|---|---|---|---|---|---|---|---|---|
| 5/20/98 | IRAEW 01-15 | 0.2 | 7.0 | 38 | 105 | <0.005 | < 0.027 | 0.07 | 0.0003 |
| 5/22/98 | IRAEW 01-15 | 2.0 | 6.9 | 38 | 105 | <0.005 | < 0.027 | 0.71 | 0.0003 |
| 6/18/98 | IRAEW 01-15 | 18.4 | 6.2 | 34 | 105 | <0.02 | < 0.109 | 5.87 | 0.0010 |
| 7/21/98 | IRAEW 01-15 | 21.0 | 11.0 | 60 | 105 | <0.005 | < 0.027 | 11.88 | 0.0003 |
| 8/10/98 | IRAEW 01-15 | 10.0 | 3.0 | 16 | 105 | <0.005 | < 0.027 | 1.54 | 0.0003 |
| 8/27/98 | IRAEW 01-15 | 4.5 | 5.5 | 30 | 105 | <0.005 | < 0.027 | 1.27 | 0.0003 |
| 9/1/98[d] | IRAEW 01-15 | 4.0 | 5.5 | 30 | 105 | <0.005 | < 0.027 | 1.13 | 0.0003 |
| | **Total =** | **60.1** | | | | | **Total =** | **22.5** | |

[a] Values given are for TCE (molecular weight = 131.4) after addition of dilution air.

[b] ppmv = parts per million by volume, as determined by the analytical laboratory.

[c] µg/L = micrograms per liter, as determined by the analytical laboratory.

[d] September 1, 1998 was the conclusion of the FTO demonstration; samples were not collected at this time. The August 27, 1998 THC concentrations were used to estimate the pounds of TCE removed.

# SECTION 4

# FULL-SCALE VAPOR RECOVERY AND TREATMENT FOR THE SOURCE AREA REDUCTION SYSTEM

This section evaluates the full-scale design for SVE and alternatives for soil vapor treatment at the SARS site.

## 4.1 FULL-SCALE DESIGN

The purpose of the SARS is to reduce the mass of TCE and other VOCs in the source area. Source-mass reduction is being accomplished by lowering the groundwater table in the treatment area and extracting VOC-contaminated soil vapors using a system of DPE wells. A slurry wall has been installed around the DPE wells to isolate the source area and reduce the inflow (recharge) of groundwater into the treatment area (Versar, 1996).

The SARS was constructed by Versar. The SARS consists of 15 DPE wells, a liquid-ring vacuum pump, two water transfer pumps, an air/water separator tank, three carbon canisters for vapor treatment, and associate piping and instrumentation.

Versar expects the SARS system to proceed through two operational phases during the course of remediation (estimated by Versar to be approximately 3 years): 1) a dewatering phase; and 2) a treatment phase. Upon initiation of DPE, both groundwater and soil vapors are extracted by the system. As the cone of water table depression increases, the saturated soils within the slurry wall will become dewatered (dewatering phase), and concurrently the volume of unsaturated soil will increase, allowing the vapor flow rate being extracted by the system to increase to an optimal operating condition (treatment phase). Versar expects operational vapor flow rates during the dewatering phase of approximately 80 cfm. During the treatment phase, Versar expects operational vapor flow rates on the order of 180 cfm, with maximum flow rates up to 250 cfm (Shingledecker, 1998). During the FTO demonstration, the SARS system was operating primarily in the dewatering phase (80 cfm flow rate).

During the FTO demonstration, the concentrations of THC detected by the laboratory in the post-dilution influent vapor stream ranged from 3,000 to 10,000 ppbv (Table 3.1). The concentrations of TCE detected by the laboratory in the post-dilution influent vapor stream ranged from 5,100 to 11,000 ppbv (Table 3.1). For the full-scale design, and for cost estimating purposes, it was assumed that the concentration of VOCs would remain the same during the dewatering and treatment phase.

## 4.2 COMPARISON OF VAPOR TREATMENT TECHNOLOGIES

The purpose of the technology comparison is to identify alternative vapor treatment technologies for full-scale application and to compare FTO system treatment costs with costs of those applicable technologies. The cost comparisons are based on the expected duration of treatment of the SARS (3 years [Versar, 1996]), and assuming operational vapor flow rates of 80 and 250 cfm and similar influent concentration as were measured during this demonstration.

The primary technologies available for treatment of soil vapors containing chlorinated hydrocarbons include granular activated carbon (GAC), thermal/catalytic oxidation, resin-bed sorption/desorption systems, and FTO. Based on the low influent vapor concentrations, GAC is considered the most appropriate technology for comparison for full-scale use. GAC is the technology currently being used at the SARS for vapor treatment. A brief overview of available treatment technologies is presented below, followed by a cost comparison of an FTO system and GAC.

### 4.2.1 Available Treatment Technologies

Physical adsorption of contaminants in the vapor stream is the primary treatment mechanism of GAC. GAC is most applicable when high removal efficiencies are required and low mass loadings are expected. As the contaminant mass loading increases, GAC usage rates, and therefore operating costs, increase. The low influent vapor VOC concentrations measured at the SARS during the FTO demonstration indicate GAC is an appropriate technology for use at the SARS, and therefore was selected for cost comparison purposes.

Typical thermal-oxidation systems are flame-based such that the influent vapor stream is heated to temperatures between 1,000 and 1,600° F, and contaminants are burned in the presence of oxygen to form carbon dioxide and water. Catalytic-oxidation systems are similar to thermal-oxidation systems except for lower operating temperatures (600 to 900° F), and the addition of a catalyst to facilitate oxidation of contaminants. Catalytic systems typically require more maintenance than thermal-oxidation units and have slightly higher capital costs; however, long-term supplemental fuel consumption costs typically are lower than for standard thermal oxidizers. The low concentrations of THC in the soil vapor at the SARS are not conducive to use of catalytic- or thermal-oxidation systems, which are best suited for THC concentrations greater than 500 ppmv (Hirt, 1997).

Thermatrix of San Jose, California manufactures a resin-bed adsorption system that employs engineered modular beds filled with specialty adsorbents (resins) to remove contaminants from influent vapor streams. Once the modular beds become saturated with contaminants, the beds can be regenerated using a heating/cooling process that results in a liquid contaminant condensate that must be disposed of. Based on discussions with representatives from Thermatrix, the resin-bed sorption systems are best suited for sites with contaminants that include higher concentrations of influent contaminants than are present at the SARS.

### 4.2.2 Cost Comparison of Vapor Treatment Technologies

Based on the review of available technologies (Section 4.2.1), only GAC appears to be an appropriate technology for comparison with the FTO system at the SARS. Capital,

operating, and maintenance costs for two FTO systems and an equivalent-throughput (i.e., same mass loading) GAC system are presented in Table 4.1. The basis for comparison was the cost of treatment over the expected duration of the SARS project at the former Lowry AFB (3 years). Two cost comparisons were made: 1) cost of treatment during the dewatering phase (80 cfm flow-rate); and 2) cost of treatment during the treatment phase (maximum 250 cfm flow-rate). Different FTO units were compared to GAC in the two phases, based on unit flow capacities. The two operational phases were compared to evaluate cost competitiveness of the FTO units at both flow-rates. Mass loading into the systems was assumed to be similar to the loadings measured during this demonstration. Costs for the SVE equipment are not included in this comparison because such costs would be similar for either technology, and the SVE system is installed at the site. Thus, only those costs associated with treatment of the vapors are included.

The following assumptions apply to the cost estimate:

- It was assumed that the project would not last more than 3 years, based on estimates by Versar (1996).
- The system would operate for 3 years at a flow rate of 80 cfm or 250 cfm.
- Contaminant mass loading into the systems was assumed to be equivalent to the loading measured during this demonstration.
- Maintenance costs for the activated carbon system were estimated to be 50 percent of those costs incurred for the FTO unit because of the non-mechanical nature of the system.
- Daily monitoring costs (including analytical) were assumed to be equal.
- The available FTO unit for 80 cfm flow rate is heated electrically as opposed to the FTO unit for 250 cfm, which is heated with supplemental fuel (e.g., propane).
- Additional assumptions are provided in the footnotes of Table 4.1.

Overall, the capital costs for the FTO systems are significantly greater than that of the GAC systems in either operational phase. The overall operating cost of the FTO is higher due to the need for electricity, and/or supplemental fuel, and additional maintenance requirements. Total costs for treatment using an FTO system are approximately $454,000 and $620,000 for 80 and 250 cfm, respectively. Total costs for treatment using GAC are less than half that of the FTO system (approximately $194,000 and $216,000 for 80 and 250 cfm, respectively).

These costs are impacted significantly by the estimated contaminant loading of the systems. As used in the estimate, the low measured concentrations suggest that GAC is the most cost-effective treatment technology to apply at the site. However, if VOC concentrations were to increase significantly, the operating costs of the GAC system would be increased due to higher carbon usage while the operating costs of the FTO system would remain relatively stable. This may lead to possible long-term cost advantages for the FTO system. In addition, the GAC usage efficiency is negatively affected by increases in temperature and relative humidity of the vapor stream (see Appendix D). Increases in either of these variables would lead to higher GAC usage rates and thus higher costs.

# TABLE 4.1
## CAPITAL AND OPERATING COST COMPARISON OF FTO AND GRANULAR ACTIVATED CARBON FOR TREATMENT OF SOIL VAPORS
### FTO TREATMENT SYSTEM DEMONSTRATION
### SOURCE AREA REDUCTION SYSTEM
### FORMER LOWRY AFB, COLORADO

| | | DEWATERING PHASE (80 cfm)[a] | | TREATMENT PHASE (250 cfm)[b] | |
|---|---|---|---|---|---|
| Inter-agency WBS #[c] | Cost Element | Thermatrix Inc. FTO Unit ES-100 Model (1 unit) (100 scfm) | CARBTROL Corporation G-4 Adsorbers (2 units in series) (1,000 pound per unit) | Thermatrix Inc. FTO Unit GS-100 Model (1 unit) (500 scfm) | CARBTROL Corporation G-4 Adsorbers (2 units in series) (1,000 pound per unit) |
| | | Cost | Cost | Cost | Cost |
| | Capital Cost (vapor treatment only) | | | | |
| 33-14 | Treatment Unit | $103,115[d] | $8,008 | $300,000[e] | $8,008 |
| 33-01 | Design/Labor/Installation[f] | $11,700 | $5,200 | $11,700 | $5,200 |
| | Total Capital | $114,815 | $13,208 | $311,700 | $13,208 |
| | Operating Cost (daily) | | | | |
| | Includes: | | | | |
| 33-14-XX-01-08 | • Maintenance/Monitoring (includes monthly O&M )[g] | $131 | $65 | $131 | $65 |
| 33-14-XX-01-08 | • Analytical (includes analysis costs and labor)[g] | $89 | $89 | $89 | $89 |
| 33-14-XX-01-08 | • Supplemental Fuel | none | none | $57 | none |
| 33-14-XX-01-08 | • Carbon Costs[h] | none | $12 | none | $32 |
| 33-14-XX-01-08 | • Utility Requirement[i] | $90 (electricity) | none | $5 (electricity) | none |
| | Total Cost (3 Year Duration)[j] | $454,265 | $194,978 | $620,490 | $216,878 |

## TABLE 4.1 (continued)
## CAPITAL AND OPERATING COST COMPARISON
## OF FTO AND GRANULAR ACTIVATED CARBON FOR TREATMENT OF SOIL VAPORS
### FTO TREATMENT SYSTEM DEMONSTRATION
### SOURCE AREA REDUCTION SYSTEM
### FORMER LOWRY AFB, COLORADO

a/ Vapor flow-rate (80 cubic feet per minute [cfm]) expected during dewatering phase (Shingledecker, 1998).

b/ Maximum vapor flow-rate (250 cfm) expected during treatment phase (Shingledecker, 1998).

c/ USEPA, 1995.

d/ Cost based on vendor quote from Thermatrix Inc. Costs include $95,000 for each ES-100 unit plus an additional $3,615 for a fume blower and knockout drum (Parsons ES, 1998) and $4,500 for control valves (Parsons ES, 1998), both of which are necessary for smooth operation of the FTO unit.

e/ Cost based on vendor quote from Thermatrix Inc. Costs include $95,000 for each ES-100 unit ($190,000 total) plus an additional $3,615 for a fume blower and knockout drum (Parsons ES, 1997) and $4,500 for control valves (Parsons ES, 1997), both of which are necessary for smooth operation of the FTO unit.

f/ Design/Labor/Installation costs were estimated at 180 hours at $65/hour for the FTO systems and 80 hours at $65/hour for the carbon adsorption systems.

g/ Based on actual Parsons ES cost for the FTO unit. The maintenance costs for the carbon adsorption system were reduced by 50 percent due to the non-mechanical nature of the CAC system.

h/ Based on carbon usage rates supplied by CARBTROL Corporation (see Appendix D). Carbon usage rates assume a temperature of 75°F and a relative humidity of the influent vapor stream of 50%. Increases in temperature and relative humidity of the vapor stream will decrease the carbon usage efficiency increasing carbon costs. Cost for carbon usage assumed to be $1.15/pound, which includes the cost of the replacement carbon, reactivation, transportation, and labor.

i/ Based on electricity requirements supplied by Thermatrix. Cost was estimated at $0.08/kW-hour.

j/ Total treatment duration estimated by Versar (1996) assumes the system would operate for 3 years at a flow rate of 80 cfm or 250 cfm.

# SECTION 5

# REFERENCES


Colorado Air Quality Control Commission. 1997. Excerpts from Regulation No.3, *Air Pollutant Emission Notices, Construction Permits, and Fees*. March.

Meltzer, J.S. 1992. "Flashback Testing of Thermatrix ES-60H Oxidizer," Report No. SSR-1628, Fenwal Safety Systems, Inc., Marlborough, MA.

MERCK and Co, Inc. *The Merck Index*, an Encyclopedia of Chemicals, Drugs, and Biologicals. Third Edition. 1983 (p. 1318).

Parsons Engineering Science, Inc (Parsons ES). 1995. *Installation Restoration Program Supplemental Remedial Investigation/ Feasibility Study, Characterization of the Source and Extent of Trichloroethene and Related Compounds in Groundwater at the Fly Ash Disposal Area, Lowry Air Force Base, Colorado*. March.

Parsons ES. 1998. *Final Work Plan for the Evaluation of Flameless Thermal Oxidation at Former Lowry Air Force Base, Colorado*. January.

Parsons ES. 1997. *Final Site-Specific Technical Report for the Evaluation of Thermatrix GS Series Flameless Thermal Oxidizer for Off-Gas Treatment of Soil Vapors with Volatile Organic Compounds at Site FT-002, Plattsburgh Air Force Base, New York.* June.

Shingledecker, P. Versar, Inc. 1998. Personal Communication to Pete Guest, (Parsons ES). September.

Thermatrix, Inc. 1992. Destruction of Organic Compounds in the Thermatrix Flameless Thermal Oxidizer, San Jose, California.

Versar, Inc. 1995. *Draft Preliminary Site Characterization Summary Report Operable Unit 5, Groundwater, Lowry Air Force Base, Colorado.*

Versar, Inc. 1996. *Draft Final Lowry Air Force Base Source Area Reduction System Field Pilot Study Implementation Plan.* December

Versar, Inc. and Remediation Technologies, Inc. (Versar and RETEC). 1996. *Installation Restoration Program Final Detailed Analysis of Alternatives for the Interim Remedial Action, TCE Plume and Outfall Source Area, Lowry Air Force Base, Colorado.* February.

US Environmental Protection Agency (USEPA). 1995. *Guide to Documenting Cost and Performance for Remediation Projects.* Prepared by the Member Agencies of the Federal Remediation Technologies Roundtable.

# APPENDIX A

# PIPING AND INSTRUMENTATION DIAGRAMS AND VENDOR INFORMATION

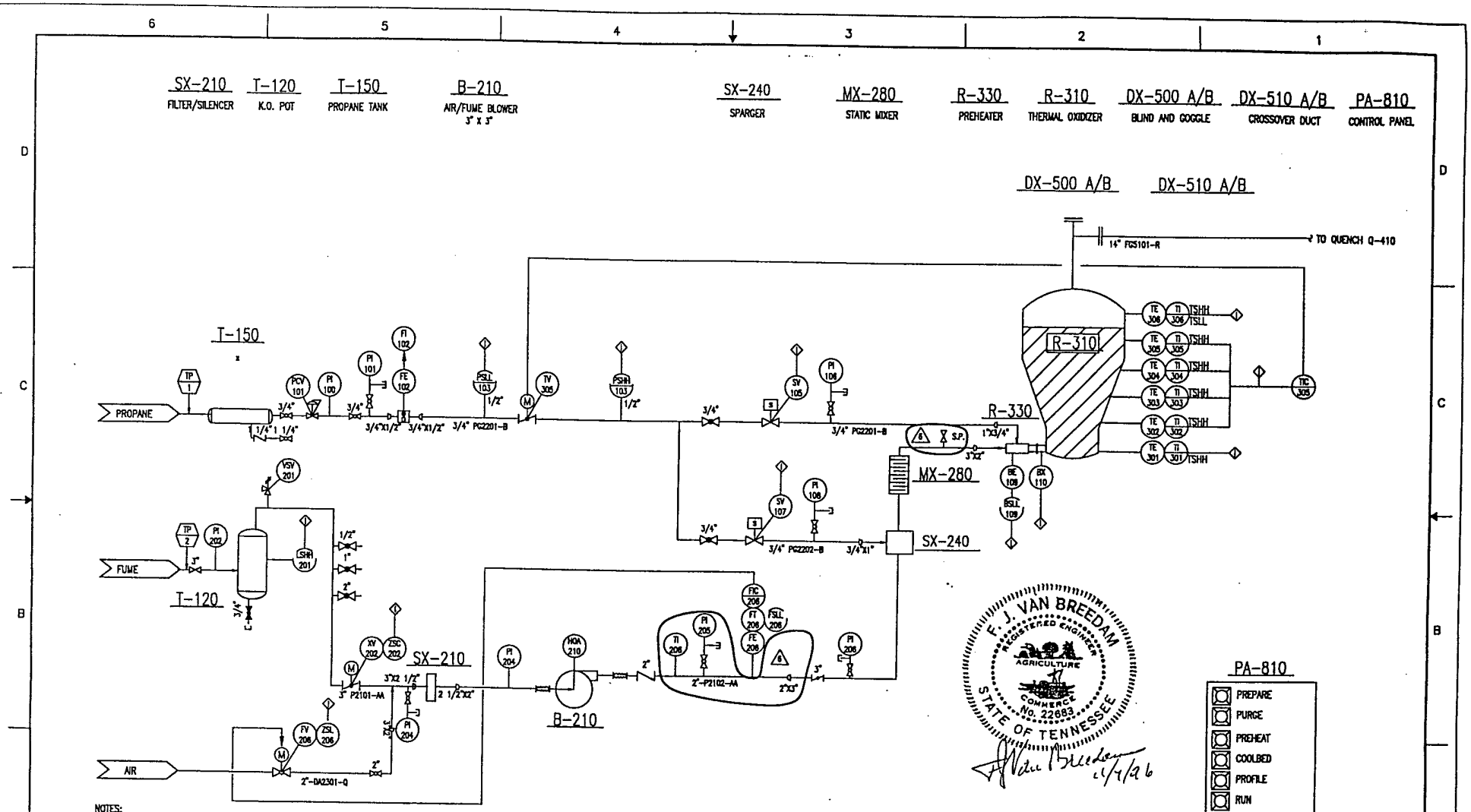


NOTES:

1. AREA CLASSIFICATION IS GENERAL SERVICE
2. INSTRUMENT AIR IS NOT AVAILABLE
3. ESD KILLS ALL SKID OERATIONS

| E.C.N. | REV | DESCRIPTION | DATE | APV |
|---|---|---|---|---|
| | 6 | AS BUILT | 10-26-96 | JLM |
| | 5 | MECHANICAL REVISIONS | 7-19-96 | CB2 |
| | 4 | MECHANICAL UPDATES | 2-8-96 | CB2 |
| | 3 | CLIENT AND ENGINEERING CHANGES | 1-23-96 | JAN |
| | 2 | ENGINEERING REVISIONS | 11-28-95 | JAN |
| | 1 | REVISED PER CLIENT COMMENTS | 11-09-95 | JAN |
| | 0 | INITIAL RELEASE | 11-01-95 | JAN |

THERMATRIX
SAN JOSE, CA 95134
KNOXVILLE, TN 37922

PARSONS, DENVER, CO

PIPING AND INSTRUMENTATION DIAGRAM

SIZE D | DRAWING NO. J-3780-000-P401 | REV. 6

DATE 10/17/95

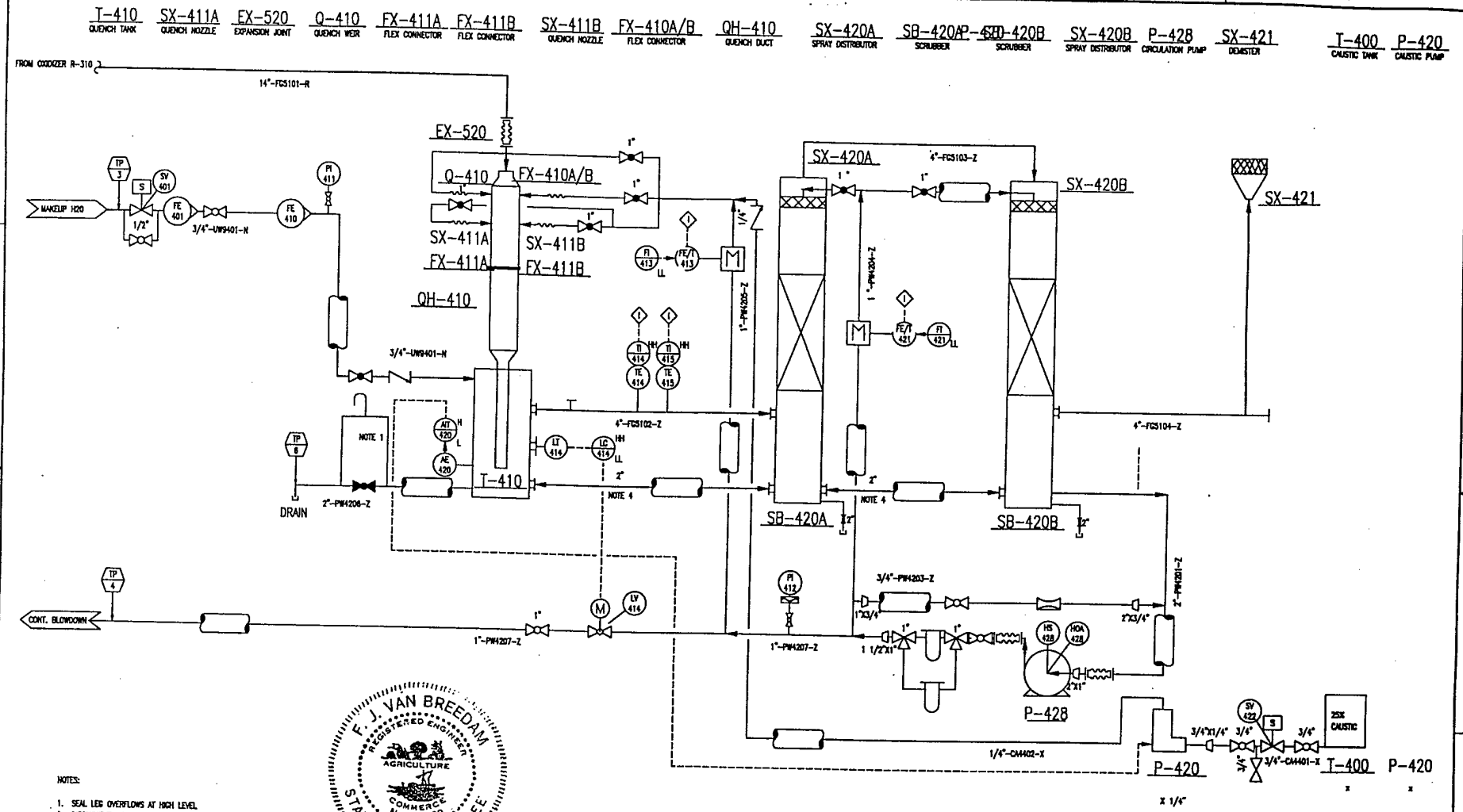


NOTES:

1. SEAL LEG OVERFLOWS AT HIGH LEVEL
2. INSTRUMENT AIR IS NOT AVAILABLE
3. COMMON SUMP TIE LINE
4. AREA CLASSIFICATION IS GENERAL SERVICE

F. J. VAN BREEDAM
REGISTERED ENGINEER
AGRICULTURE
COMMERCE
No. 22683
STATE OF TENNESSEE

F. Van Breedam 12/4/96

| E.C.N. | REV | DESCRIPTION | DATE | APV |
|---|---|---|---|---|
| | 6 | AS BUILTS | 10-26-96 | CB2 |
| | 5 | MECHANICAL REVISIONS | 7-19-96 | CB2 |
| | 4 | MECHANICAL UPDATES | 2-8-96 | CB2 |
| | 3 | CLIENT AND ENGINEERING REVISIONS | 1-23-96 | JAN |
| | 2 | ENGINEERING REVISIONS | 11-28-95 | JAN |
| | 1 | REVISED PER CLIENT COMMENTS | 11-09-95 | JAN |
| | 0 | INITIAL RELEASE | 11-01-95 | JAN |

THIS DRAWING CONTAINS PROPRIETARY INFORMATION WHICH IS TO BE HELD CONFIDENTIAL AND MAY NOT BE REPRODUCED, OR DISCLOSED TO OTHERS WITHOUT THE PRIOR WRITTEN CONSENT OF THERMATRIX INC. OR DULY AUTHORIZED REPRESENTATIVE THEREOF.

PROJECT: USAF/PARSONS

Thermatrix Inc.
KNOXVILLE, TN 37922
SAN JOSE, CA 95134

TITLE: PIPING AND INSTRUMENT DIAGRAM

| | | |
|---|---|---|
| DRAWN BY | JLM | DATE 11-1-95 |
| DESIGN BY | JD | DATE 11-1-95 |
| CHKD BY | JAN | DATE 11-1-95 |
| APVD BY | JAN | DATE 11-1-95 |

DRAWING NO. J-3780-000-P402 6

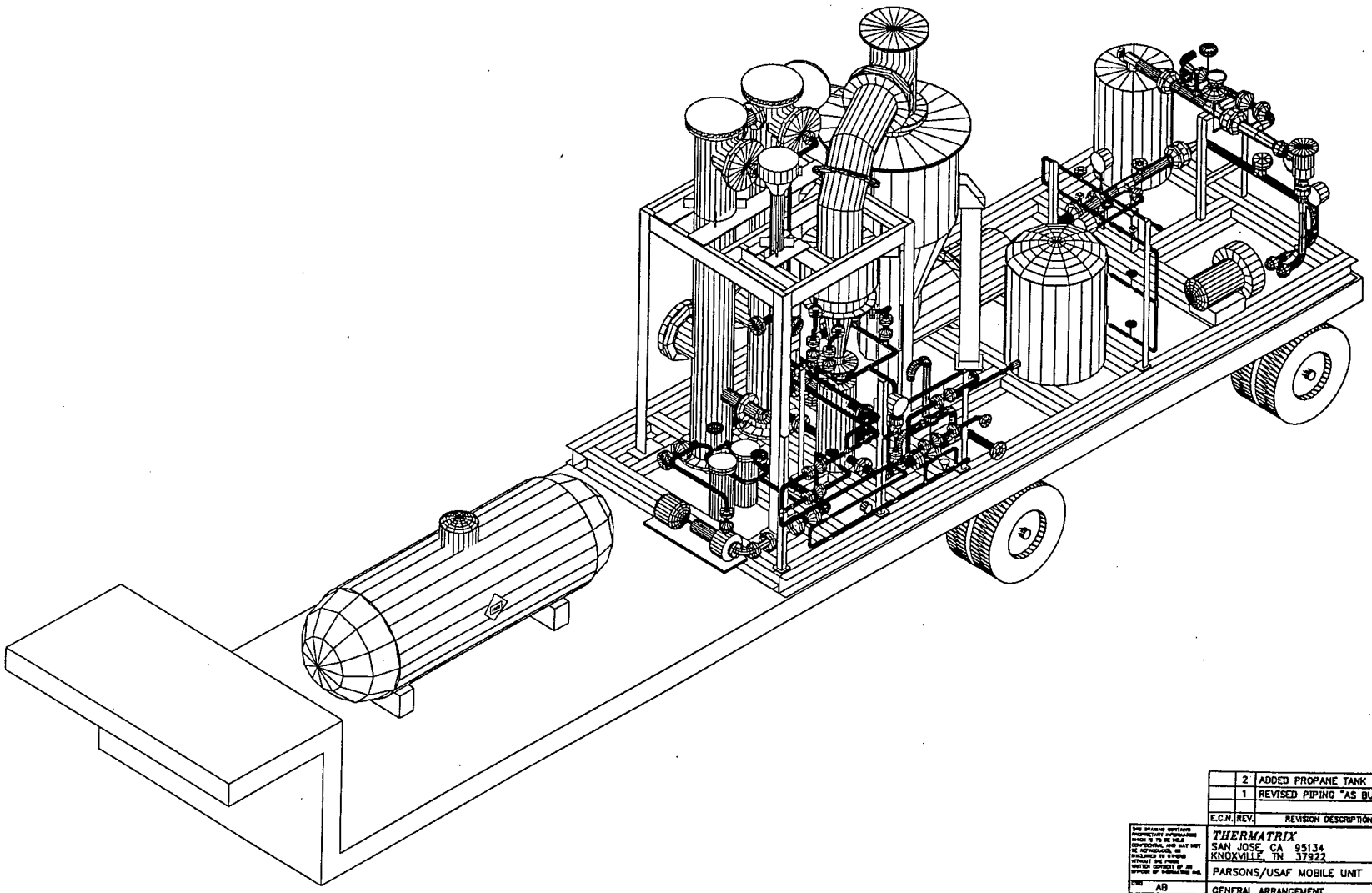

| E.C.N. | REV. | REVISION DESCRIPTION | DATE | APV |
|---|---|---|---|---|
| | 2 | ADDED PROPANE TANK | 11/13/96 | |
| | 1 | REVISED PIPING "AS BUILT" | 11/4/96 | |

THIS DRAWING CONTAINS PROPRIETARY INFORMATION WHICH IS TO BE HELD CONFIDENTIAL AND MAY NOT BE REPRODUCED, OR DISCLOSED TO OTHERS WITHOUT THE PRIOR WRITTEN CONSENT OF AN OFFICER OF THERMATRIX INC.

*THERMATRIX*
SAN JOSE, CA 95134
KNOXVILLE, TN 37922

PARSONS/USAF MOBILE UNIT

GENERAL ARRANGEMENT
SYSTEM ISOMETRIC

DWG AB
CHK
PRJ MGR
CHG MGR
DATE 1-30-96

SIZE D | COPYRIGHT 1996 | DRAWING NO. J-378-000-M71 | REV. 2

SCALE AS NOTED | 1 OF 3

# Halogenated VOC Abatement

## FLAMELESS THERMAL OXIDATION

### INTRODUCTION

A major chemical company has installed (1995) and is operating a Thermatrix flameless thermal oxidation system for treatment of methylene chloride emissions from herbicide production. Prior to this installation, traditional flame-based technology was the corporate standard for this application.

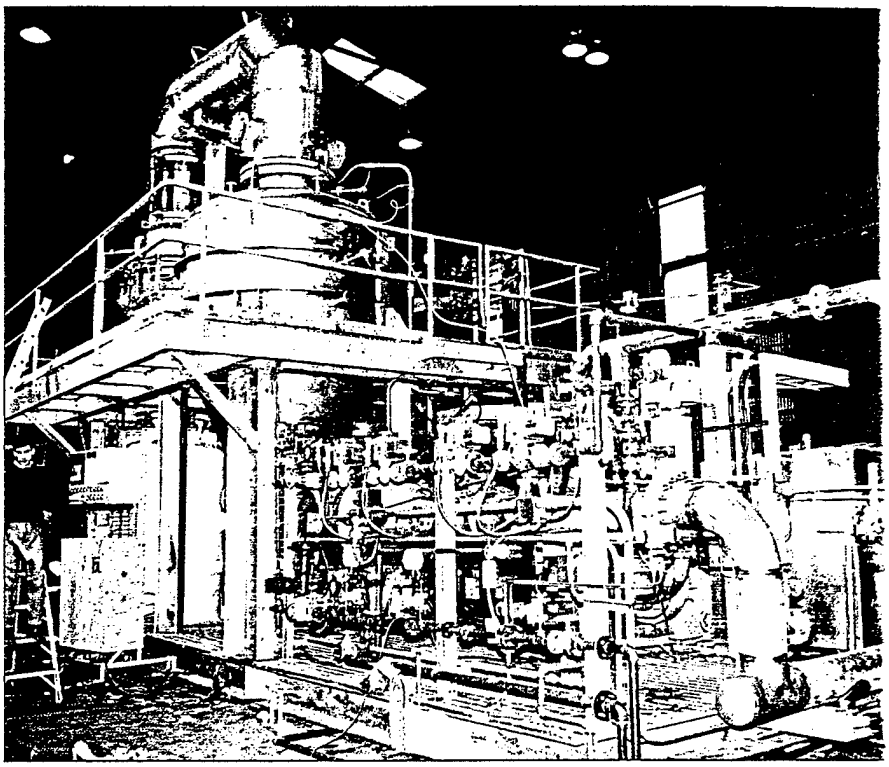

FLAMELESS THERMAL OXIDIZER SYSTEM FOR HERBICIDE PLANT CVOCS
FULLY AUTOMATED, HIGH ALLOY REACTOR WITH QUENCH
1500 SCFM TOTAL FLOW

### PROCESS DESCRIPTION

The herbicide manufacturing process consists of various unit operations that continuously or intermittently vent process gases containing chlorinated VOCs. The combined vent stream includes 275 pounds per hour methylene chloride, six pounds per hour CO, and traces of methanol, formaldehyde and dichloromethyl ether. Venting results from equipment de-pressurization, controlled process venting, equipment purges, batch chemical transfers and normal breathing losses. Vents are collected and routed to the Thermatrix system for treatment.

### THERMATRIX SYSTEM DESCRIPTION

The skid-mounted, fully automated abatement system consists of a Thermatrix reactor and an effluent gas quench which feeds directly to a pre-existing scrubber system. The system is designed for a total flow of 1500 scfm. Prior to shipping, the system was preassembled and modularized to the extent possible to minimize on-site installation work scope.

The system is fed by two vent collection headers which are combined immediately prior to entering the main fume line. Both streams are water saturated, with one containing high concentrations of VOCs inerted with nitrogen to reduce flammability. The second stream contains relatively low concentrations of VOCs and is continuously purged with air.

During operation, combustion air is added to the combined vent streams in the main fume line to maintain a minimum oxygen concentration. The premixed fume is then introduced to the Thermatrix reactor, where the organics are oxidized to carbon dioxide and water vapor. An acid gas (HCl) is produced and quenched, then sent directly to a pre-existing caustic scrubber for neutralization. All materials of construction are appropriate for the processing of corrosive gases.

### INSTALLATION, COMMISSIONING & PERFORMANCE TESTING

On-site installation was completed in less than 6 days. Performance testing and analysis were performed by a laboratory using EPA test protocol methods 18 and 25. Inlet samples containing up to 300 ppm of total hydrocarbons were taken from the main fume line. Outlet samples collected at the stack revealed undetectable hydrocarbons at a 1 ppm detection limit.

### A TOTAL SOLUTION

This Thermatrix application has been field proven to be safe, economical and effective. Direct comparison with alternative technologies reveals similar capital costs with significantly lower operating costs, higher DRE, and improved on-line availability. The demonstrated advantages of the technology helped facilitate the permitting process while providing a total solution for this client's "hard to treat" CVOC abatement application.

Thermatrix Inc.

...Technology Beyond Compliance

# Flameless Thermal Oxidation

## TECHNOLOGY BEYOND COMPLIANCE

### COST EFFECTIVE TECHNOLOGY INTEGRATION

Flameless Thermal Oxidation can be effectively utilized over a wide range of organic abatement applications. The unique advantages of the technology make possible cost saving emission control approaches not traditionally associated with VOC abatement. The safety and scalability of the flameless Thermatrix device allows for placement in flameproof areas treating smaller, more concentrated point sources. This, coupled with high DREs, can often significantly reduce the total volume of emissions treated while still attaining overall emission reduction goals.

### FLAMELESS THERMAL OXIDATION ADVANTAGES:

- Guaranteed 99.99% DRE, including halogenated organics
- Ultra low NOx... less than 2 ppm
- Destructive process produces no secondary organic waste stream
- Energy efficient operation, self-sustaining down to 10 BTU/$cf^3$ in fume
- Approved for classified areas... can be located directly at emission source
- Stable operation when responding to variable organic loading
- Matrix is completely inert, with no catalysts to foul
- Superior turndown capability better addresses minimum baseload conditions, reducing operating costs
- Easily permitted... no continuous emission monitoring required
- Creates potential for emission credits

### THE TOTAL SOLUTION

Thermatrix has the engineering experience and expertise to provide a total solution to your environmental problem. We specialize in full-scale, "turnkey" VOC abatement systems.

Thermatrix systems are simple, robust, highly efficient and can provide unique cost savings not possible with more traditional emission control approaches. In many industrial applications, life cycle costs have been field proven to be significantly lower than alternative solutions. Whether you need to replace an existing, more expensive technology or control new emissions from expanding production, call us today and let Thermatrix cost effectively take you to the next level...*beyond compliance.*

# Thermatrix Technology Description

## FLAMELESS THERMAL OXIDATION

### TECHNOLOGY BEYOND COMPLIANCE

Thermatrix Inc. has developed an innovative technology which has been field proven to consistently achieve VOC and HAP destruction/removal efficiencies (DREs) of 99.99% or greater. This unique, flameless technology provides safe, cost effective treatment of a wide range of industrial pollutants. Only the Thermatrix process is able to guarantee greater than 99.99% destruction efficiencies *and* ultra low NOx emissions, typically below 2 ppm.

Thermatrix technology exhibits significant advantages over traditional treatment technologies. These advantages allow our clients to take a fundamentally different approach to process emission control. Thermatrix systems, due to their safety and stability, can be located directly in the client's process at the source of emission. This cost effective, pollution prevention approach can dramatically reduce the volume of emissions treated while achieving maximum reduction in overall emissions. Cost savings are realized by the installation of smaller, more energy efficient systems while the high DRE can favorably influence emission averaging and even provide emission credits.

In the Thermatrix process, organic compounds are oxidized in an inert ceramic bed, without flames or catalysts, into harmless carbon dioxide and water vapor or easily neutralized acid gases. While traditional flame-based thermal oxidation relies on the flame for both fume mixing and reaction, the Thermatrix process completely decouples fume mixing from the oxidation reaction. This allows greater flexibility and control and eliminates products of incomplete combustion (PICs). The absence of catalysts also avoids any chance of poisoning or sintering the matrix.

### THE MATRIX

The basis for the Thermatrix process is a "porous inert matrix." This matrix fosters conditions necessary to establish a very efficient and stable reaction zone, allowing flameless oxidation of organic compounds outside their respective flammability limits. The rate of oxidation in this matrix is much faster than with traditional treatment technologies, rendering residence time a non-factor. Also, in contrast to catalytic oxidizers, pressure drop across the system is very low due to the high void space ratio (70%) in the matrix.

The three primary attributes of the porous inert matrix that promote flameless oxidation are its interstitial geometry (enhances mixing), thermal inertia (promotes stability), and surface characteristics (augments heat transfer). The thermal properties of the matrix allow the pre-reaction area, or "mixing zone," to be near ambient temperature while the reaction zone is at the appropriate oxidation temperatures.

The properties of the matrix allow for very effective abatement of halogenated organics. Halogenated organics do not effect destruction efficiency or system life, as appropriate corrosion resistant materials are used for each application. Post-reactor acid gas scrubbing can be provided as needed.

Maximum temperatures in the reaction zone remain well below those of a flame, resulting in extremely energy efficient operation with very low formation of thermal NOx. Using a porous inert matrix to support the oxidation reaction results in several performance, safety and process control related advantages.

## THE PROCESS

During initial startup of the unit, the matrix is pre-heated and the desired temperature profile is established. Once in profile, the preheater is completely isolated from the system and fume processing can begin. As the fume enters the ambient mixing zone of the reactor, turbulence intimately mixes the hydrocarbons and air. The ambient mixing zone, with its large thermal mass, adds to the safety of the system by acting to prevent flashback. As the well-mixed, ambient stream moves through the matrix it is heated to oxidation temperature as it reaches the reaction zone. The matrix design physically forces the entire fume stream to pass through the reaction zone which ensures complete destruction of the organic compounds and results in consistently high DREs. Heat released by the exothermic oxidation reaction is absorbed by the matrix, providing the thermal momentum needed to maintain the process.

Emissions which vary widely in fume flow and concentration, as in batch chemical manufacturing, are ideally suited for the thermally efficient Thermatrix process. Energy, in the form of heat, is stored in the matrix between peaks in organic loading. This "buffering" capability enables the system to efficiently process fume on very short notice without additional energy input. For intermittent operations, such as those which shut down overnight or on weekends, air flow through the insulated reactor is significantly reduced to help maintain appropriate temperature profile. This operational stand-by, or "ready idle" mode, greatly reduces operating costs and prolongs system life by minimizing thermal cycling.

Control of the Thermatrix oxidizer is simple and straightforward. The same thermal inertia that buffers system reaction to fluctuating process conditions also provides ample response time to control the reaction. Process control components maintain desired operating temperatures by managing the heating value (enthalpy) of the incoming fume. For organic rich or oxygen deficient streams, dilution air is mixed with the fume to maintain the matrix at desired operating temperatures; for lean fume streams, supplemental energy is added to maintain the oxidation reaction. The typical process control scheme is a simple temperature loop controlling the addition of air or fuel to the incoming fume stream.

## THE TOTAL SOLUTION

Thermatrix has the experience and expertise to provide total solutions for a wide range of environmental problems. We have designed, installed, and successfully operated full-scale, "turnkey" systems for numerous industrial applications.

Thermatrix systems are simple, robust, highly efficient and can provide unique cost savings not available with more traditional emission control approaches. In many industrial applications, life cycle costs have been field proven to be significantly lower than those of alternative solutions. Whether you need to replace an existing, more expensive technology or control new emissions from expanding production, call us today and let Thermatrix cost effectively take you to the next level...*beyond compliance.*

# Thermatrix Inc.

...Technology beyond Compliance

## Flameless Thermal Oxidizers for VOC and HAP Control

### GS Series: Gas Preheated, "Straight-through" design

Features:
- Guaranteed 99.99% VOC Destruction, including Chlorinated compounds
- Ultra Low NOx...below 2 ppm
- Approved for use in flameproof areas
- Best on fumes with richer VOC concentrations
- Available with top down or bottom up preheat

Typical Applications: Process vents, Wastewater treatment, Remediation, Fuel storage and transfer.

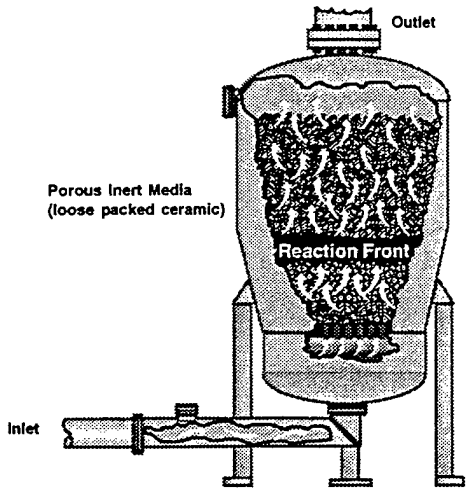


### GR Series: Gas Preheated, with "Internal Heat Recovery"

Features:
- Guaranteed 99.99% VOC Destruction, including Chlorinated compounds
- Ultra low NOx...below 2 ppm
- Approved for use in flameproof areas
- Best on fume streams with leaner VOC concentrations

Typical Applications: Process vents, Wastewater treatment, Thermal Desorber off-gas treatment, Paint Booths

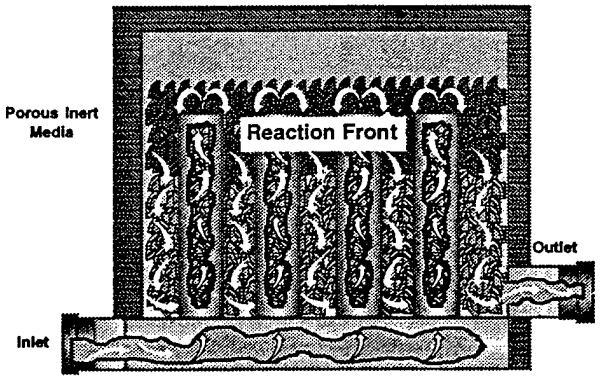


### ES Series: Electric Preheated, "Straight-through" design

Features:
- Guaranteed 99.99% VOC Destruction, including Chlorinated compounds
- Ultra low NOx...less than 2 ppm
- Approved for use in flameproof areas
- Best on VOC streams below 500 scfm

Typical Applications: Wastewater treatment, Process vents, Fugitive emissions, Remediation

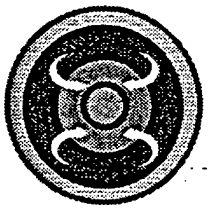


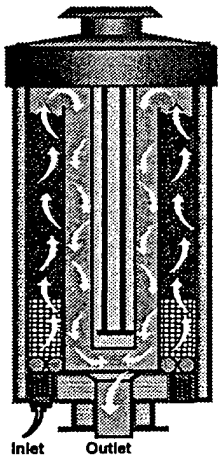


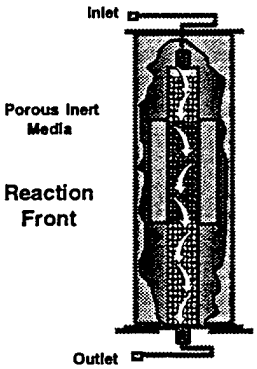



| San Jose, CA | Knoxville, TN | Mount Laurel, NJ | Naperville, IL | Houston, TX | London, England |
|---|---|---|---|---|---|
| Tel: (408) 453-0490 | Tel: (423) 539-9603 | Tel: (609) 727-5313 | Tel: (708) 717-2911 | Tel: (713) 397-0474 | Tel: 011 44 71 369 9191 |
| Fax: (408) 453-0492 | Fax: (423) 539-9643 | Fax: (609) 727-5351 | Fax: (708) 717-0284 | Fax: (713) 580-6720 | Fax: 011 44 71 361 9192 |

# Applications of Thermatrix Flameless Oxidation Technology in the Treatment of VOCs and Hazardous Wastes

by

Robert G. Wilbourn
Marshall W. Allen
and
Alexander G. Baldwin

Thermatrix Inc.
308 N. Peters Road
Knoxville, Tennessee
(615) 539-9603

Presented at
International Incineration Conference
Seattle, Washington
May 8-12, 1995

# APPLICATIONS OF THERMATRIX FLAMELESS OXIDATION TECHNOLOGY IN THE TREATMENT OF VOCS AND HAZARDOUS WASTES

Robert G. Wilbourn
Marshall W. Allen
and
Alexander G. Baldwin

Thermatrix Inc.

## ABSTRACT

The Thermatrix thermal oxidation technology is a unique, flameless oxidation process that is accomplished in a packed-bed inert matrix. In just over two years of commercial application the technology has been shown effective in destroying a wide variety of organic compounds including chlorinated and sulfonated hydrocarbons. Performance testing conducted to date demonstrates the technology is capable of achieving destruction and removal efficiencies (DREs) in excess of 99.99% with the concurrent production of extremely low quantities of thermal $NO_x$ and carbon monoxide.

The technology has been successfully applied in the treatment of: chlorinated hydrocarbons separated from waste water, fugitive emissions from spray painting operations, and volatile organic compound (VOC) emissions from refinery operations. This year successful treatment and remediation applications of the emerging Thermatrix oxidation technology have been extended. Current technology development and application project activities include: the treatment of VOCs and chlorinated organic compounds separated from contaminated soils, the processing of off-gases containing total reduced sulfur (TRS) compounds, the abatement of chemical vapor releases from manufacturing and refinery operations and on-going technology demonstrations at DOE and DOD sites.

This paper presents and summarizes: current technology development activities, advances in the design of treatment systems based on the Thermatrix thermal oxidation technology, and performance achievements in system operations at multiple project sites.

## INTRODUCTION

The Thermatrix technology is a unique, proprietary, patented technology for the flameless thermal oxidation of noxious emissions which arise the normal course of operations in the oil and gas, chemical, pharmaceutical, manufacturing and environmental remediation industries. Thermatrix pioneered its thermal oxidation technology for the highly efficient, controlled, non-flame oxidation of VOCs in a ceramic matrix called a "packed bed". [1] The oxidation of organics occurs in a "reaction zone" contained within the bed of chemically inert ceramic materials typically operated at 1600-1850°F.

In its simplest form, the packed-bed device, shown in Figure 1, consists of an insulated cylinder containing a heated ceramic matrix. In operation, the VOC stream, and any air required to support the oxidation reaction is passed into the bottom of the preheated bed and moves upward through the matrix The temperature of the incoming gas rises as it picks up heat from the bed until the oxidation temperature of the organic is attained. Once the reaction temperature has been reached, the organics in the VOC stream oxidize creating a stabilized reaction zone as heat is given up to the surrounding matrix. The large thermal mass of the bed also enables it to store or release large amounts of heat without rapid changes in temperature. In many cases the VOC stream may already contain adequate heating value to sustain the bed temperatures. If needed, supplemental energy can be provided from either an electrical heater or by enriching the mixture with natural gas or propane.

Figure 2 schematically presents a basic technology enhancement, i.e., internal oxidation heat recuperation. Heat recuperation in a Thermatrix thermal oxidation unit is accomplished by flowing the incoming and exiting gases counter-currently with metal tube separation.[2] In this manner, heat produced during oxidation of the organic constituents is used to raise the temperature of the incoming gas mixture. This style of reactor provides operational and economic process advantages especially in the treatment of highly energetic feed streams, e.g., those streams containing organic compounds in concentrations near the lower explosive limit (L.E.L.).

## TECHNOLOGY APPLICATIONS AND TEST RESULTS

### Wastewater Treatment

In an effort to voluntarily reduce emissions, a chemical company identified a wastewater stream as a significant source of uncontrolled emissions. The wastewater is generated by steam jet eductors from a vacuum column used in a chemical manufacturing process. The condensed steam from the jet eductors is contaminated with 530 ppmw of ethyl chloride and smaller quantities of butyl chloride, benzyl chloride and non-chlorinated organics, primarily toluene.

The wastewater treatment project was on an extremely aggressive time line to meet corporate emission reduction deadlines. The project scope provided for the design, manufacture, and pre-assembly of a complete unitized, skidded system in less than eight weeks to allow on-site installation, commissioning and start-up to be completed within four weeks.

Thermatrix designed, fabricated and supplied a 100 scfm electrically heated reactor as part of the work scope for this client. The reactor was integrated into an abatement system consisting of an air stripper, knock-out pot, flameless oxidizer, HCl scrubbing system and fully automated controls.

# Flameless Thermal Oxidizer

Figure 1

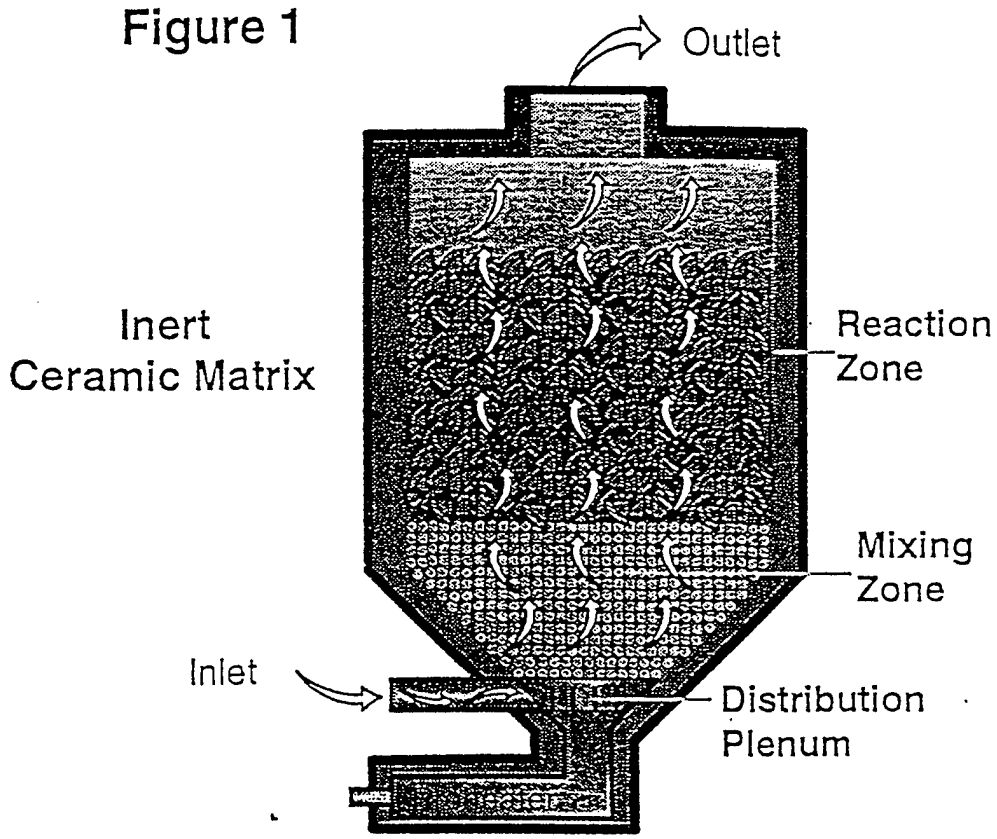

# Flameless Thermal Oxidizer with Internal Heat Recovery

Figure 2

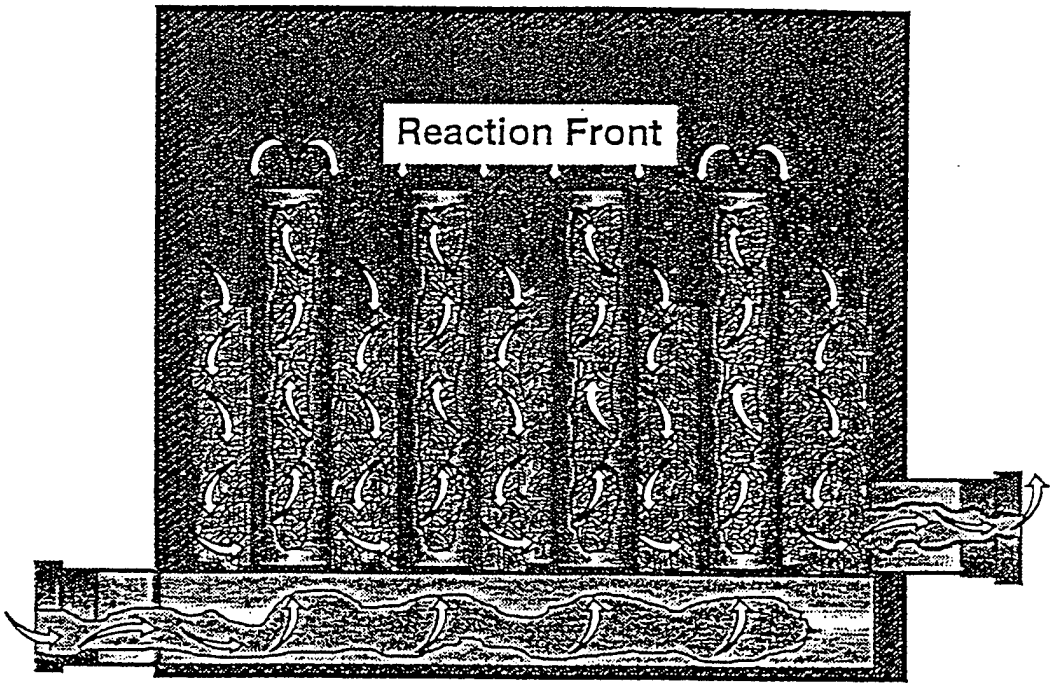

Approximately 50 gpm of wastewater is admitted to the air stripping column that is designed to remove 99.9% of the volatiles and produce a moist air stream containing the organics. The cleaned water is recycled to the plant, while the 100-scfm stripper off-gas is conveyed through a knock-out pot and demister before entering the flameless oxidizer, where 99.99% destruction of the organics has been demonstrated achievable. The oxidation reaction produces $CO_2$, $H_2O$ and HCl. Upon exiting the oxidizer, the gases are quenched and admitted to the scrubbing tower, where 99% of the HCl gas is removed. The scrubber water is discharged from the system to the plant waste water system and the organic-free and acid-free gases exit the scrubber to atmosphere.

To minimize the on-site work scope, the treatment system was designed and pre-assembled complete with all piping, instrumentation and electric power systems. The on-site scope required only completing the few process piping tie ins, terminating a single power feeder and multi-conductor control cable, and erecting the stripping and scrubbing towers which are too tall to be transported in place. Pile foundations, field piping and electrical runs and certain site improvements were completed while the system was being manufactured.

The system was installed, started-up and commissioned without any significant delays. The system has been operating successfully since January 1993. The air permit for the system was issued by state authorities in 30 days.

## Refinery Applications

### API Separator Emission Treatment

A petroleum refining company contracted with Thermatrix to provide a thermal oxidation system which utilizes a recuperative unit to abate the hydrocarbon emissions from two American Petroleum Institute (API) separators. The project was driven by benzene National Emission Standards for Hazardous Air Pollutants (NESHAP's) for wastewater treatment (40 CFR 61, Subpart FF). A client obtained extension required that the facility be in full regulatory compliance by January 1995.

The project called for Thermatrix to provide a complete skid mounted system with internal heat recovery efficiency of no less that 65%. The thermal oxidation system treats the vapors from several locations in the plant which are manifolded into the suction of two sets of blowers and ducted to the thermal oxidation system. These sources include: two API oil/water separator covers and a number of skimmed oil sumps and slop oil tanks. Figure 3 is a process flow sheet overview of this application.

Thermatrix provided a modularized thermal oxidation system with a stack. Figure 4 shows the system general arrangement. The system is capable of processing 1250 scfm of plant emissions. Preliminary performance results are presented in Table 1 and demonstrate the capability of the system to meet established performance criteria.

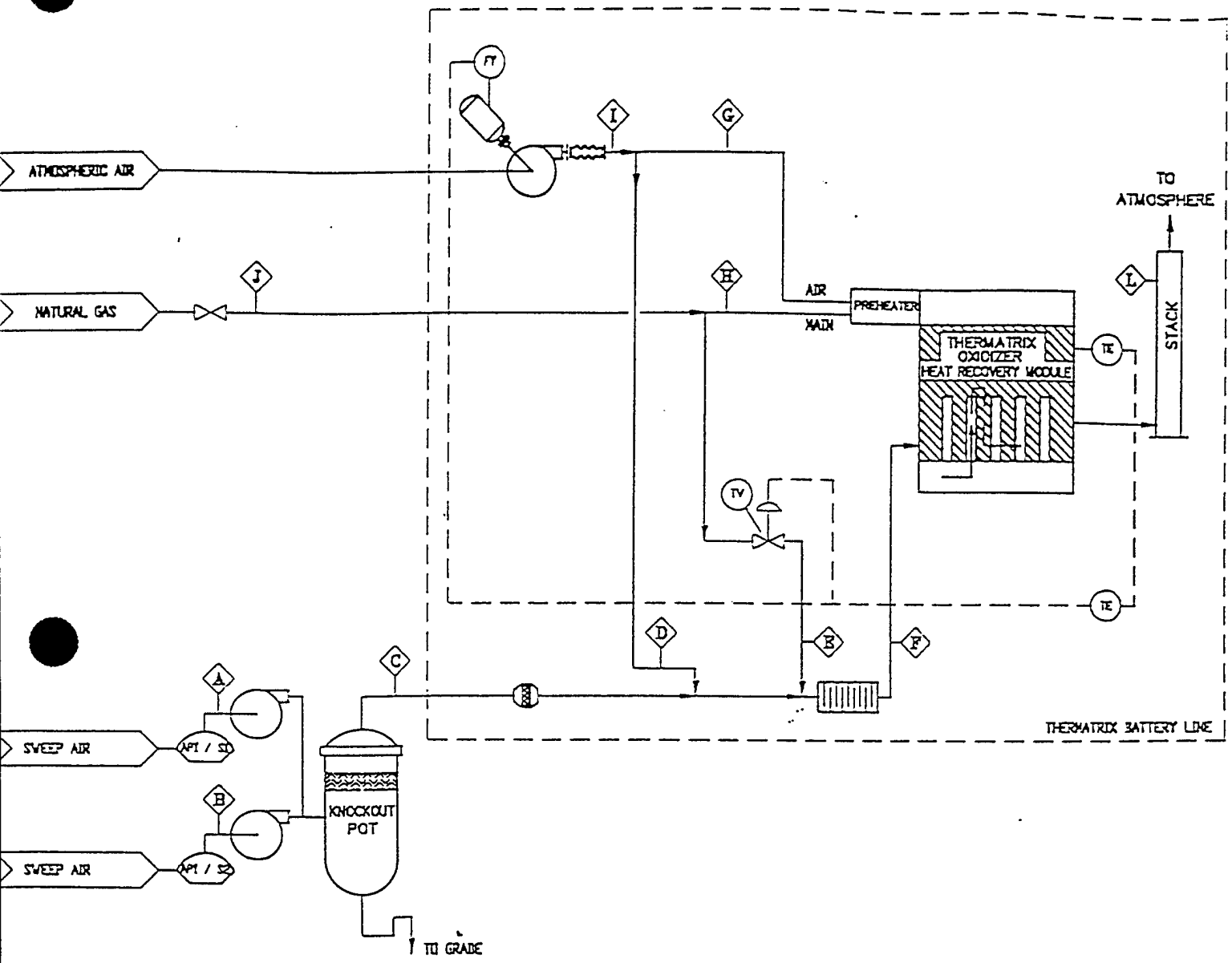


FIGURE 3

REFINERY API SEPARATOR EMISSION TREATMENT
PROCESS FLOW DIAGRAM

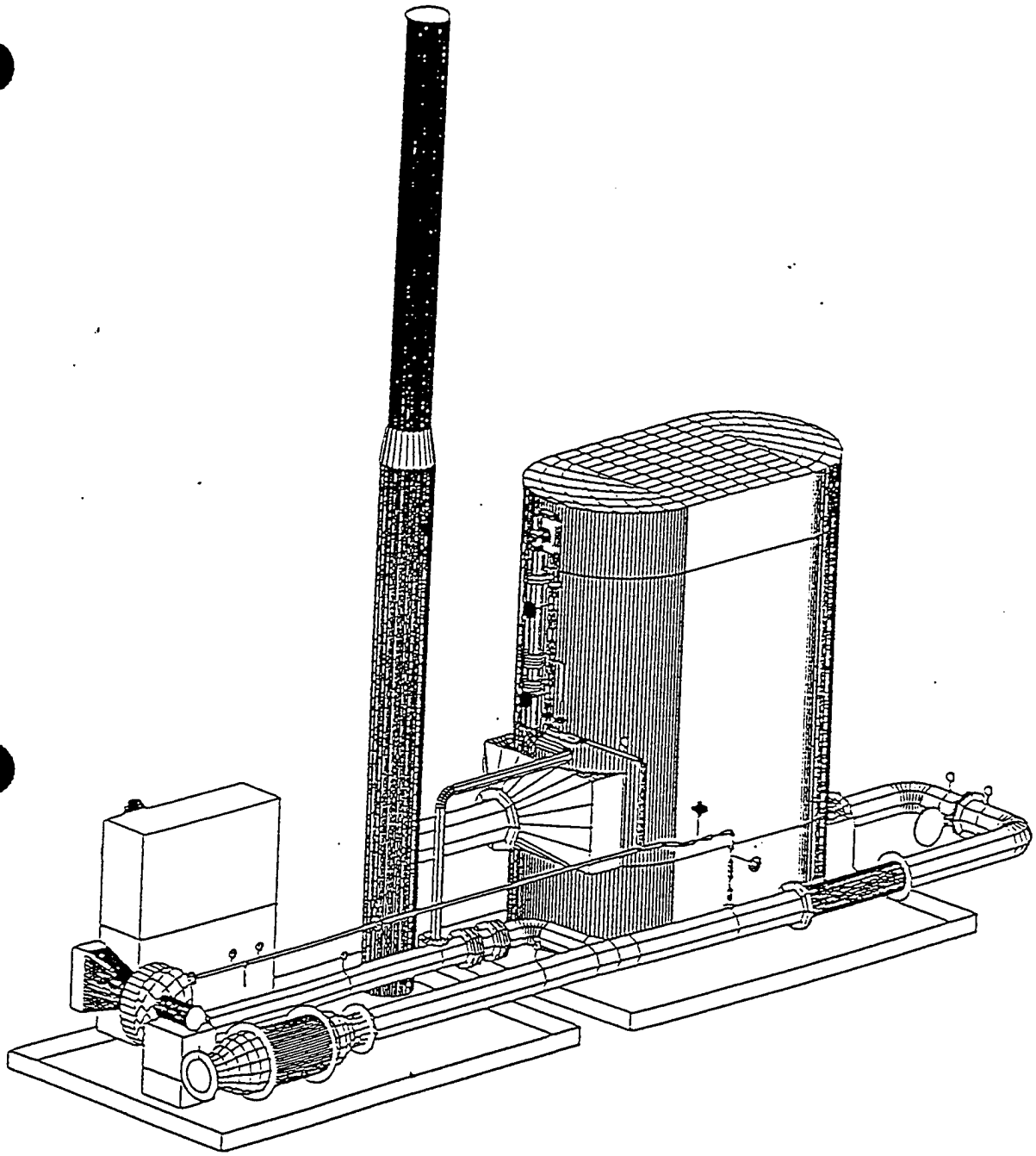

FIGURE 4

REFINERY API SEPARATOR EMISSION TREATMENT SYSTEM
GENERAL ARRANGEMENT

Table 1
Performance Summary
Thermatrix Oxidizer Treating API Separator Emissions

| Sample | Total HC (ppmv) | % DRE | CO (ppmv) | $\%CO_2$ | $\%O_2$ | $\%N_2$ | $\%CH_4$ |
|---|---|---|---|---|---|---|---|
| Inlet | 5200 | | <10 | 0.091 | 21 | 78 | 0.027 |
| Outlet | (<5) ND | >99.9 | <10 | 2.1 | 19 | 79 | <0.0002 |

## Oil Recycling

In 1994 Thermatrix supplied a 4000 scfm thermal oxidation unit for use in an oil recycling operation. The client for this unit operates a transportable waste-oil recovery facility that manufactures various grades of fuel oil from waste lubricating oils. The manufacturing process consists of several unit operations including a thermal-cracking reactor that continuously vent process gases containing VOCs. Venting results from entrained air, vaporized waste, light hydrocarbon non-condensable gases and controlled process venting. The incorporation of a Thermatrix unit in the processing system mitigates VOC emissions. Additionally, a finned-tube heat exchanger unit is used to recover heat from the hot Thermatrix off-gas to provide process heating requirements. The heat is transferred to a circulating hot oil stream. The cooler off-gas exiting the heat recovery unit is vented to atmosphere through a stack.

Preliminary test results show the composition of the Thermatrix/heat recovery unit off-gas meets the performance criteria established for the project. Performance data are presented in Table 2.

Table 2
Performance Summary
Thermatrix Oxidizer Treating Waste-Oil Recycling VOCs

| Sample | Total HC (ppmv) | %DRE | CO (ppmv) | $\%CO_2$ | $\%O_2$ | $\%N_2$ | $\%CH_4$ |
|---|---|---|---|---|---|---|---|
| Inlet #1 | 6400 | | 34 | 1.1 | 19 | 78 | 37 |
| Outlet #1 | ND (<0.5) | >99.99 | ND (<10) | 2.9 | 18 | 79 | ND (0.0002) |
| Outlet #2 | ND (<0.5) | >99.99 | ND (<10) | 5.1 | 13 | 81 | ND (0.0002) |

## Treatment of Pulp Plant Non-Condensable Gases

In the Kraft paper production process a solution containing sodium hydroxide and sodium sulfide is used in the treatment of wood to separate the wood's fiber and lignin components. During pulp plant operations volatile sulfur-bearing VOCs are formed which can be problematic from an emissions control standpoint. A particularly problematic source of sulfur-bearing VOCs associated with paper production is the process non-condensable gases (NCGs) which contain significant quantities of pinene, hydrogen sulfide, methyl mercaptan, dimethyl sulfide and dimethyl disulfide.

In 1994, Thermatrix contracted to deliver a system for the treatment of NCG fumes at a pulp mill. The system is comprised of a gas inlet train, a stainless steel 3000 scfm thermal oxidizer, a quench, a wet scrubber and stack. Figures 5 and 6 schematically present details of the oxidizer and overall system. The system has been installed at the client's site and is currently in the startup and commissioning phase of the project. Initial difficulties were encountered in the startup due to the design placement of the temperature sensing and control thermocouples. These difficulties were largely overcome by relocating the original horizontal thermocouples to a vertical orientation in closer proximity to the reaction zone thereby enabling more accurate temperature monitoring and control.

By the end of February 1995, approximately 400 hours of operation on NCG fumes had been logged. In limited tests the following performance criteria have been demonstrated for the system:

- Destruction and removal efficiency (DRE) for total reduced sulfur (TRS) Compounds > 99.99%
- Sulfur dioxide emission rate of <15 ppm
- Sulfur dioxide ($SO_2$) removal > 99.96%
- Hydrogen sulfide emission rate < 5 ppm

## Treatment of Chemical Plant Chlorinated Volatile Organic Compound Emissions

In January 1995 Thermatrix successfully commissioned a 1500 scfm skid-mounted system consisting of a Hastelloy(R) oxidizer and a quench/scrubber. The system is currently processing methylene chloride emissions generated during the production of pesticides. The system is designed to provide > 99.99% DRE for chlorinated hydrocarbons.

# PARTICIPATION IN DOD AND DOE TECHNOLOGY DEMONSTRATION PROGRAMS

The Thermatrix thermal oxidation technology is currently being demonstrated in two government-sponsored innovative technology demonstration programs. The elements of these programs are presented below:

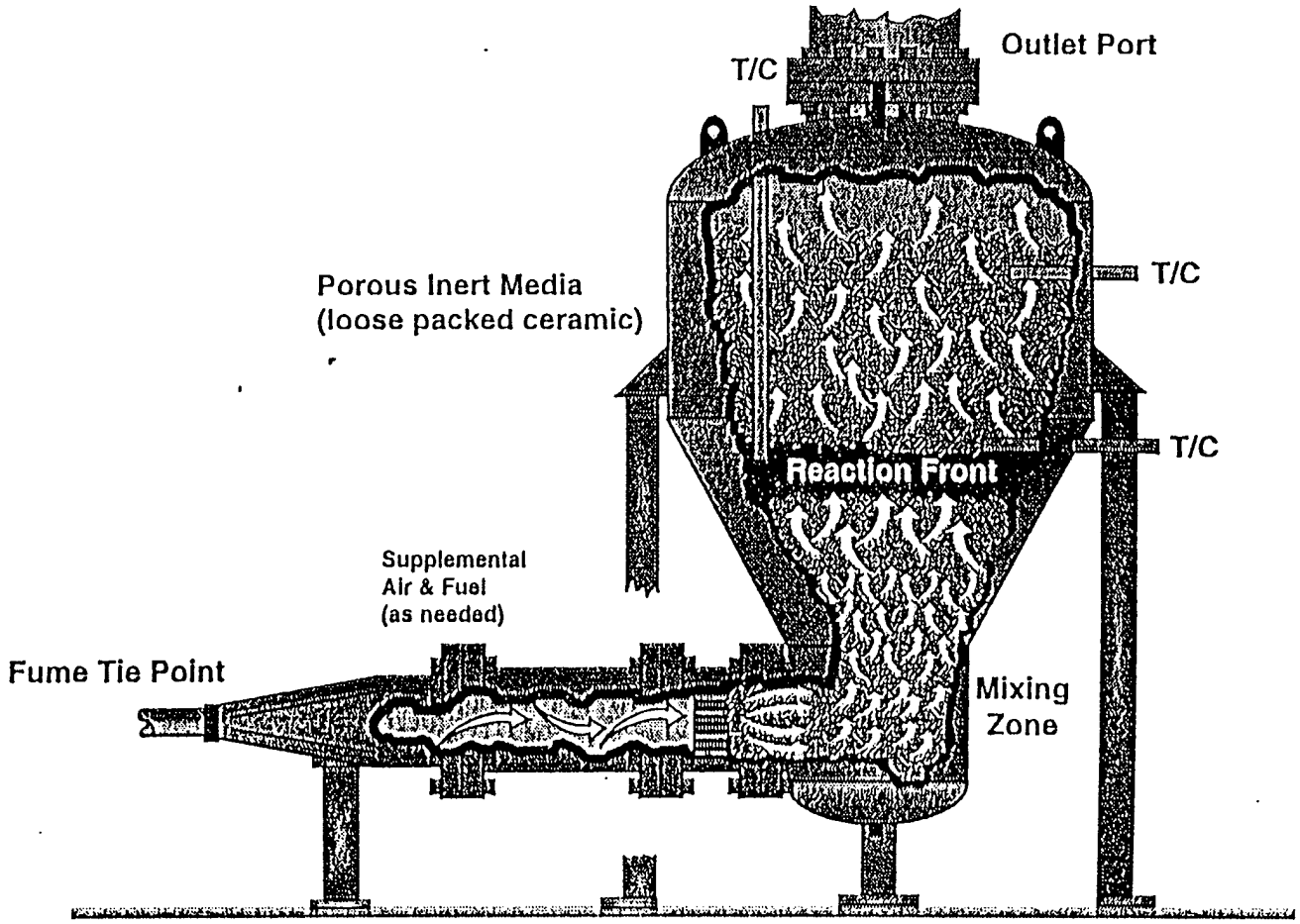


Figure 5
Cutaway Drawing of GS-3000M Reactor
Treatment of Pulp Mill Non-Condensable Gases

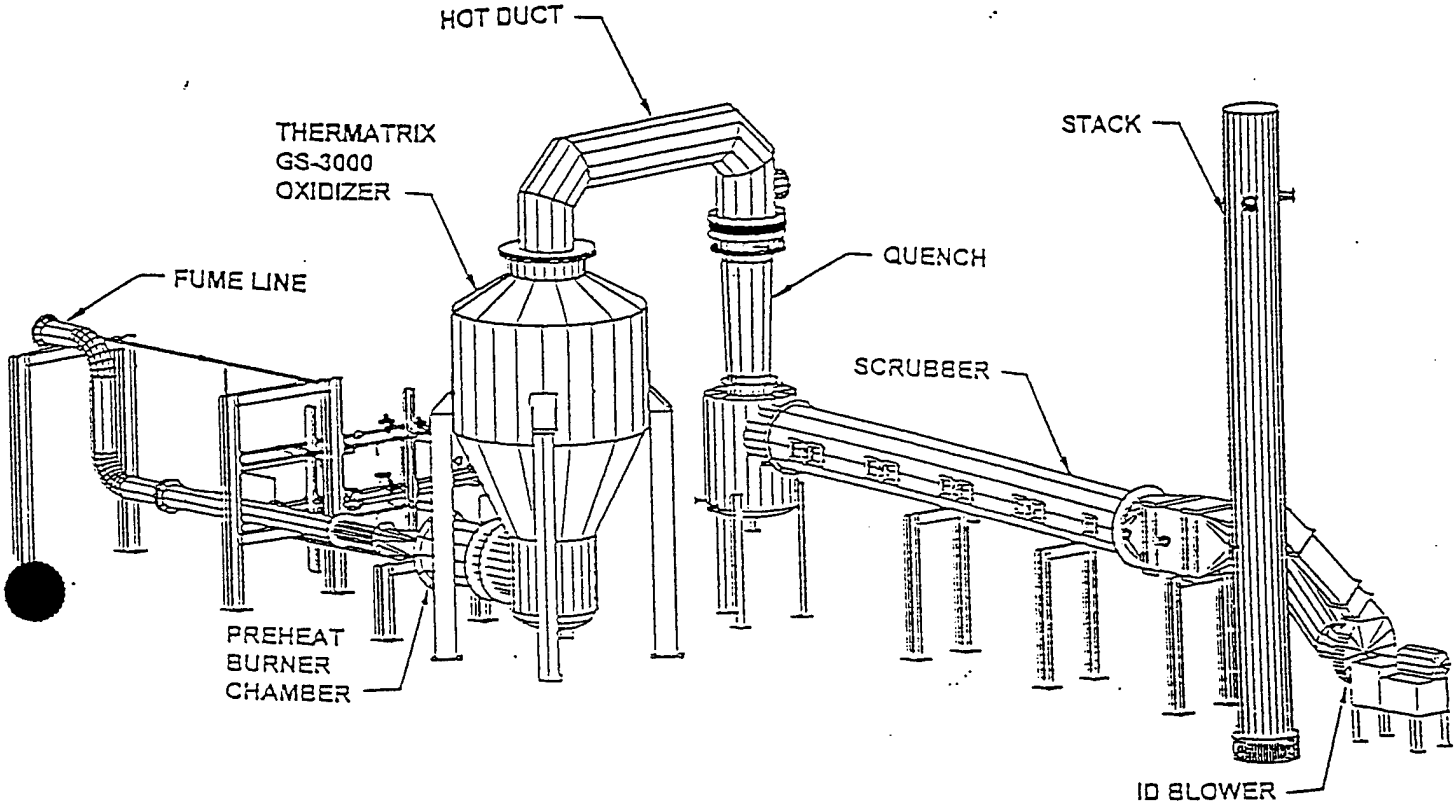


FIGURE 6

PULP PLANT NON-CONDENSABLE
GAS TREATMENT SYSTEM

U.S. Navy

Thermatrix has contracted with the Navy under its Navy Environmental Leadership to demonstrate the effectiveness of the thermal oxidation technology in treating VOC emissions from the fuel farm at the Naval Air Station North Island (NASNI). A 5 scfm electrically heated oxidizer has fabricated for use in this demonstration. The demonstration will be performed in April 1995.

Department of Energy

The Thermatrix technology is applicable to the in-situ and ex-situ treatment of soils contaminated with organic compounds thorough coupling with other technologies, e.g., soil vapor extraction and thermal desorption.[3] Thermatrix will demonstrate its thermal oxidation in the treatment of chlorinated VOCs removed from the vadose zone of the soil at the U. S. Department of Energy Savannah River Laboratory Site. A 5 scfm electrically heated unit will be used in this demonstration which couples soil vapor extraction technology with Thermatrix thermal oxidation technology. A schematic overview of planned demonstration is shown in Figure 7.

## CONCLUSIONS

The successful application case histories presented above attest to the broad base of Thermatrix's thermal oxidation technology in providing solutions to organic compound treatment and site remediation. With over 30 projects completed to date, the Thermatrix thermal oxidation technology has rapidly transitioned from an innovative, emerging technology to full-scale application.

## REFERENCES

1. R. J. MARTIN, et.al., "Selecting the Most Appropriate HAP Emission Control Technology, " The Air Pollution Consultant, Volume 3, Issue 2 (March/April 1993).

2. M. W. ALLEN, et.al., "Flameless Thermal Oxidation for Low Concentration VOC Remedial Wastestreams: Designs for Planned DOE Demonstrations," presented at the Waste Management '95 Conference, February 26-March 2., 1995, Tucson, Arizona.

3. R. G. WILBOURN, et.al., "Treatment of Hazardous Wastes Using the Thermatrix Treatment System," presented at the 1994 Incineration Conference, May 9-13, 1994, Houston, Texas.

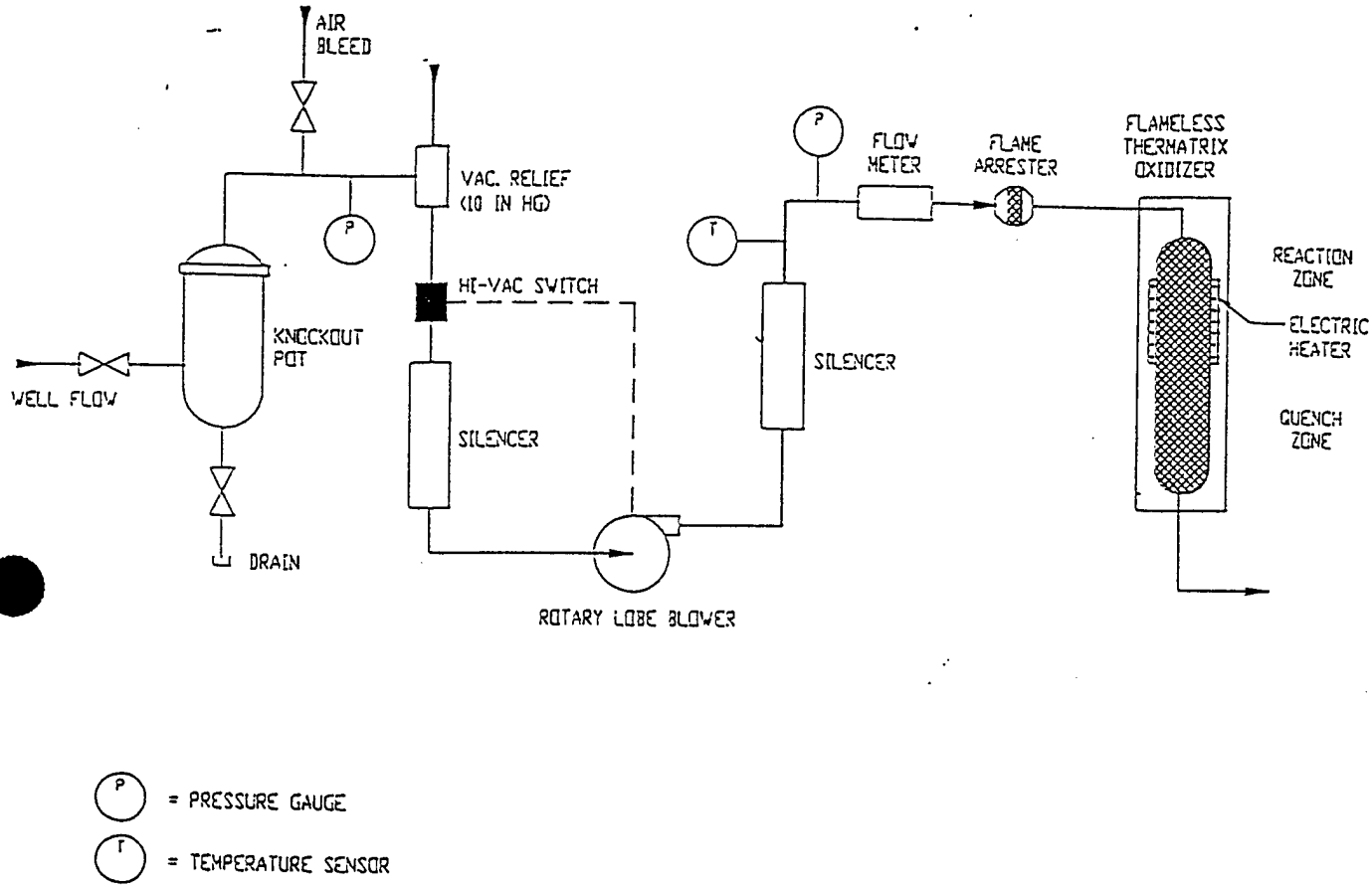


FIGURE 7

SCHEMATIC OVERVIEW OF THE SVE-THERMATRIX DEMONSTRATION

WESTINGHOUSE SAVANNAH RIVER DEMONSTRATION
INITIAL RESULTS

| FTO Temp | FTO Flow | PCE inlet ppm | PCE outlet ppm | PCE %DRE | TCE inlet ppm | TCE outlet ppm | TCE %DRE ppm | TCA inlet | TCA outlet | TCA %DRE | Comments |
|---|---|---|---|---|---|---|---|---|---|---|---|
| 1600°F | 5 scfm | 737<br>702 | <0.01<br><0.01 | >99.998<br>>99.998 | 292<br>274 | <0.01<br><0.01 | >99.996<br>>99.996 | 17.5<br>21.4 | <0.01<br><0.01 | >99.94<br>>99.95 | 1,1-DCE 5.56 in; <0.01 out |
| 1600°F | 7 scfm | 568 | 0.17 | 99.97 | 255 | <0.01 | >99.996 | 16 | <0.01 | >99.95 | 1,1-DCE 4.72 in; <0.01 out |
| 1500°F | 5 scfm | 345 | 4.43 | 98.7 | 184 | <0.01 | >99.994 | 16 | <0.01 | >99.95 | |
| 1700°F | 5 scfm | 343 | 0.01 | 99.997 | 180 | <0.01 | >99.994 | 15 | <0.01 | >99.93 | 1,1-DCE 4.09 in; <0.01 out; F113 0.03 in; <0.01 out |
| 1400°F | 5 scfm | 333 | 0.51 | 99.84 | 179 | <0.01 | >99.994 | 12 | <0.01 | 99.916 | mono-, di-, tri-, tetra-chloro-methane PICS |
| 1500°F | 3.5 scfm | ~350<br>~350 | <0.01<br>0.05 | >99.997<br>99.985 | ~180<br>~180 | <0.01<br><0.01 | >99.994<br>>99.994 | ~15<br>~15 | <0.01<br><0.01 | >99.93<br>>99.93 | |
| **1600°F** | **5 scfm** | **250** | **<0.001** | **>99.9996** | **120** | **<0.001** | **>99.9991** | ------- | ------ | ------- | **4/25/95 Improved detection limit achieved** |

Notes:

1)Prior to the initial valving of fume through the oxidizer a "system blank" sample was taken while the pre-heated unit (1600°F) was operating on air flow only (5 scfm). No organics were detected at a detection limit of 10 ppb.

2)">" values reflect quantitation limited by the analytical detection limit of 10 ppb for all compounds.

3) Results reported here are from sampling April 10-14, 1995 except for 4/25/95 entry.

# APPENDIX B

# REGULATORY CORRESPONDENCE

File: 728414.05000
Corresp. | Reg. Neg.

**PARSONS ENGINEERING SCIENCE, INC.**

1700 Broadway, Suite 900 • Denver, Colorado 80290 • (303) 831-8100 • Fax: (303) 831-8208

cc: P. Guest

November 12, 1997

Mr. Chip Hancock
Colorado Department of Public Health
and Environment
Pollution Control Division
4300 Cherry Creek Drive South, APCD-SS-B1
Denver, Colorado 80246-1530

Subject: Air Pollutant Emission Notice (APEN) and
Application for Construction Permit
Temporary Demonstration of Flameless Thermal Oxidation (FTO)
Technology at the Former Lowry Air Force Base

Dear Mr. Hancock:

Please find attached for your review and approval an Air Pollution Emission Notice (APEN) and Application for Construction Permit for the subject project. Also attached is a check for $100.00 to for the APEN filing fee.

The flameless thermal oxidation (FTO) technology demonstration will be conducted at the site of the Source Area Reduction System (SARS), which is being installed by Versar, Inc. for the Air Force Base Conversion Agency (AFBCA) at the Former Lowry Air Force Base (AFB). Versar/AFBCA have submitted a separate APEN and Application for Construction Permit for the SARS project. The FTO treatment system will treat a portion (not to exceed 105 cubic feet per minute) of the contaminated soil vapors that are extracted by the SARS.

The installation period is anticipated to occur from approximately January 15, 1998 through February 9, 1998. The system will be monitored for a period of approximately 180 days; February 9 through approximately July 31, 1998.

If you have any questions or comments, please do not hesitate to call Steve Archabal at (602) 852-9110 or me at (303) 831-8100.

Sincerely,

PARSONS ENGINEERING SCIENCE, INC.

Peter R. Guest

Peter R. Guest, P.E.
Project Manager

Attachments

c.c.: Mr. Mike Deaton, HSC/PKVAB (LOT only)
Mr. Robert Garza, AFCEE/ERS (LOT only)
Mr. Jim Gonzales, AFCEE/ERT
Mr. John Miller, AFCEE/ERB
Mr. Dan Kraft, Booz•Allen, & Hamilton, Inc.
Mr. David Williams (AFBCA Lowry AFB)
Mr. Mark Spangler (AFCEE Lowry AFB)
Mr. Michael Galvin, Versar
Mr. Steve Archabal, Parsons ES Phoenix
Mr. Jack Sullivan, Parsons ES Oklahoma City

# APPLICATION FOR CONSTRUCTION PERMIT OR PERMIT MODIFICATION
## (previously referred to as EMISSION PERMIT)

This application must be filled out completely except for #14 and #15: otherwise, application will be considered incomplete
SEE INSTRUCTIONS ON REVERSE SIDE. Mail completed application, APENs, and filing fee to:

*Colorado Department of Public Health and Environment*
*Air Pollution Control Division*
*4300 Cherry Creek Drive South, APCD-SS-B1*
*Denver, Colorado 80246-1530*
*Telephone: (303)692-3150*

1. *Permit to be issued to:*
Air Force Base Conversion Agency

2. *Mailing Address:* 800 N. Spruce Way, Building 625, Lowry AFB
*State:* CO
*Zip Code:* 80220

3a. *Agent for Service (See No. 3 on reverse):*

3b. *Federal Tax Identification Number:*

4a. *General Nature of Business:* Base Closure and Environmental Restoration

4b. *SIC Code:* 8744

5a. *Air Pollution Source Description:* Soil vapor extraction and treatment using flameless thermal oxidation technology.

5b. *Days per year source will operate:* Temp.up to 180

6a. *Source Location Address (Include Location Map):*
701 N. Yosemite Circle, Lowry AFB, Denver, CO
(If using Township and Range, give directions and distance from nearest town or intersection.) *County:* Denver

6b. *UTM Coordinates (in km)*
509.4 H 4397.4 V

7. ESTIMATED COSTS: for testing purpose only
7a. *Source, Process Equipment or Project:*
Cap. Cost $

Air Pollution Control Procedures or Equipment
7b. *Capital Cost:* $ for testing purpose only
7c. *Operating Cost:* $

8a. STATUS
- [x] *New Air Pollution Source*
- [ ] *Modification to Permitted Source (Control Equipment added, process change, etc.):* _____
- [ ] *Transfer of Ownership — Transferred from:* _____
- [ ] *Existing Source- not permitted (Include Date of Source Start-up):* _____
- [ ] *Requesting to limit a source's Potential to Emit for criteria or Hazardous Air Pollutants using Regulation No. 3 (for new and existing sources)*
- [ ] *Requesting to limit a source's Potential to Emit for Hazardous Air Pollutants only using Regulation No. 8 (for existing sources only)*
- [x] *Other:* temporary - for testing purpose only

*Projected Dates for Construction to:*
8b. *Begin:* 15 Jan 1998
8c. End: 09 Feb 1998

8d. *Projected Source Startup Date:* 09 Feb 1998

9. *Enclose check to cover APEN FILING FEES. One APEN should be filed for each emission point*
*NOTE: Additional processing fees must also be paid prior to permit issuance.*
1 APENS @ $100.00 per APEN = $100.00

10. *SIGNATURE OF LEGALLY AUTHORIZED PERSON (NOT Vendor or Equipment Manufacturer)*
Peter R. Guest

11a. *Date Signed:* 11/12/97

11b. Phone: (303) 831-8100
Fax: (303) 831-8208

12. *Type or Print name and official title of person signing item 10.*
Peter R. Guest
Parsons Engineering Science, Inc. Project Manager

For Agency Use Only
14. DATE RECEIVED

15. PERMIT NUMBER

Check appropriate box if you want:
a. ☐ *Copy of preliminary analysis conducted by Division*
b. ☐ *To review a draft of the permit prior to issuance*
Note: Checking either item could result in increased fees and/or processing time. See Reverse.

APCD:SSP:200C (Rev. 9/96dmm):wp6.1 k:\forms\app96.001

# AIR POLLUTANT EMISSION NOTICE

PERMIT No.: _____ AIRS ID.: ___/___/___

FIRM NAME Air Force Base Conversion Agency

MAIL ADDRESS 800 N. Spruce Way, Building 625, Lowry AFB, Denver STATE: CO ZIP: 80220

PLANT NAME & LOCATION Source Area Reduction System, 701 N. Yosemite Circle, Lowry AFB COUNTY Denver

HOME-BASE FOR PORTABLE SOURCES

PERSON TO CONTACT REGARDING THIS INFORMATION Mr. David Williams TITLE PHONE (303) 676-4002

GENERAL DESCRIPTION OF THIS PLANT'S FUNCTION Environmental Remediation FEDERAL TAX I.D. NO. N/A Exempt

**A. GENERAL INFORMATION**

| No. of Employees | Land Area | Normal Operation of This Source: Hours/Day | Days/Week | Weeks/Year | Process Seasonal Throughput (% of Annual): Dec-Feb | Mar-May | Jun-Aug | Sep-Nov | ADDITIONAL INFORMATION OR REMARKS: |
|---|---|---|---|---|---|---|---|---|---|
| | 0.7 | 24 | 7 | 26 | 25 | 25 | 25 | 25 | |

**B. STACK OR VENT INFORMATION** (Identify below which stack if plant has two or more; refer to attached sketch of plant layout)

| Height | Diameter | Temperature | Flow Rate | Velocity | Moisture | Plant ID No. for Stack |
|---|---|---|---|---|---|---|
| 13.5 ft | 1.17 ft | 1,800 °F | 560 ACFM | 520 ft/min | 8.6 % | |

**C. FUEL INFORMATION**

| Description of Combustion Unit | Design Input Rate ($10^6$ BTU/HR) | Kind of Fuel Burned | Annual Fuel Consumption: Requested level | Data year level | Fuel Heating Value (BTU/lb, BTU/gal, or BTU/SCF) | Per Cent by Weight: Sulfur | Ash | Seasonal Fuel Use (% of Annual Use): Dec-Feb | Mar-May | Jun-Aug | Sep-Nov | Space Htg (% Ann.) |
|---|---|---|---|---|---|---|---|---|---|---|---|---|
| for testing purpose only (up to 180 days) | | | | | | | | | | | | |
| Flameless Thermal Oxidation | 0.216 | propane | 10.85 | N/A | 87,000 | N/A | N/A | 25 | 25 | 25 | 25 | N/A |
| Make/Model: Thermatrix/Model GS-120M | | | ($10^3$ gal) | | (BTU/Gal) | | | | | | | |
| Serial No. N/A | | | | | | | | | | | | |

**D. PROCESS INFORMATION**

| Description of Processing Unit | Raw Materials Used: Description | Raw Materials-Annual Consumption: Requested level | Data year level | Design Process Rate (Specify Units/Hour) | Finished Product Description | Finished Product-Annual Output: Requested level | Data year level |
|---|---|---|---|---|---|---|---|
| For testing purpose only | | | | | | | |
| Flameless Thermal Oxidation (FTO) | propane | 10,000 | (180 day | 84 CF/hr | N/A | N/A | N/A |
| Make/Model: Thermatrix/Model GS-120M | | (gallons) | test period) | | | | |
| Serial No.: N/A | | | | | | | |

**E. POLLUTION CONTROL EQUIPMENT**

| Pollutant | Type of Control Equipment: Primary | Secondary | Overall Collection Efficiency | Estimated Emissions (Tons/Year) at Throughputs Requested Above: Controlled | Uncontrolled | Actual Emissions (Data Year) | Estimation Method |
|---|---|---|---|---|---|---|---|
| Particulate | N/A | N/A | N/A | 0 | 0 | N/A | - |
| $PM_{10}$ | N/A | N/A | N/A | 0 | 0 | N/A | - |
| $SO_x$ | N/A | N/A | N/A | 0 | 0 | N/A | - |
| $NO_x$ | (<2 ppmv) | N/A | N/A | N/A | <0.003 | N/A | manufacturer |
| VOC | flameless thermal oxidation | | 99.9 | 0.001 | 0.63 | N/A | mass balance |
| CO | (<10 ppmv) | N/A | N/A | N/A | <0.009 | N/A | manufacturer |

PLEASE USE APCD NON-CRITERIA REPORTABLE AIR POLLUTANT ADDENDUM FORM TO REPORT SUCH POLLUTANTS OR POLLUTANTS NOT LISTED ABOVE.

☐ CHECK HERE IF YOU WISH THE DIVISION TO CALCULATE YOUR EMISSIONS. SEE "EMISSION ESTIMATES" INSTRUCTIONS ON BACK.

CHECK ALL BOXES THAT APPLY

- ☐ New or previously unreported source*
- ☐ Requesting modification of existing permit†‡
- ☐ Change in emissions, throughputs or equipment‡
- ☐ Transfer of ownership (List previous owner in REMARKS section of box A.)‡
- ☐ Previous APEN is expiring‡
- ☐ Request for Emission Reduction Credit†‡
- ☐ (Specify) _____

* Complete all applicable portions of APEN
† Complete "Requested Level" values for permit limits
‡ Complete all information above box A, and those remaining portions which reflect changes

Signature of Person Legally Authorized to Supply Data: Peter R. Guest DATE: 11/12/97 DATA YEAR (See Instructions on Reverse): 1998

Typed Name and Title: Peter R. Guest, Parsons Engineering Science, Inc. Project Manager Date source began or will begin operation: 2/09/98

THIS NOTICE IS VALID FOR FIVE YEARS. A revised notice shall be filed prior to this expiration date, whenever a permit limitation must be modified, whenever control equipment is changed, and annually whenever a significant emission change occurs. For specific details see Regulation 3, Part A, § II.C.1.

A $100 FILING FEE IS REQUIRED FOR EACH NOTICE FILED.

Send completed forms with fees to:

Colorado Dept. of Public Health & Environment
Air Pollution Control Division
4300 Cherry Creek Drive South, APCD-SS-B1
Denver, Colorado 80246-1530

APEN # ___ of ___

For Information, Call (303) 692-3150

# NON-CRITERIA REPORTABLE AIR POLLUTANT EMISSION NOTICE ADDENDUM FORM*

(Instructions on reverse side)

FIRM NAME Air Force Base Conversion Agency

PROCESS DESCRIPTION Flameless Thermal Oxidation (FTO)

Distance to nearest property line from stack (or release point)? 2,500 feet

Stack height (or release point height)? 13.5 feet

(Note: see attached information for further explanation of technology description and emission factor calculations.)

| Chemical Abstract Service Number | Chemical Name | Reporting Bin | Control Equipment/ Efficiency | Emission Factor (include units) | uncontrolled Emission Factor Source | (180 days) Requested Emissions (lbs/yr) | Data Year Actual Emissions (lbs/yr) |
|---|---|---|---|---|---|---|---|
| 75-01-4 | vinyl chloride | A | FTO/99.9% | Mass Balance | 3.0 ppmv/ 0.074 lb/day | 0.013 | |
| 75-35-4 | 1,1-dichloroethene | A | FTO/99.9% | Mass Balance | 3.3 ppmv/ 0.125 lb/day | 0.023 | |
| 540-59-0 | cis-1,2-dichloroethene | - | FTO/99.9% | Mass Balance | 68 ppmv/ 2.58 lb/day | 0.464 | |
| 540-59-0 | trans-1,2-dichloroethene | - | FTO/99.9% | Mass Balance | 0.72 ppmv/ 0.027 lb/day | 0.005 | |
| 71-55-6 | 1,1,1-trichloroethene | C | FTO/99.9% | Mass Balance | 7.4 ppmv/ 0.39 lb/day | 0.070 | |
| 79-01-6 | trichloroethene | C | FTO/99.9% | Mass Balance | 54 ppmv/ 2.78 lb/day | 0.540 | |
| 127-18-4 | tetrachloroethene | A | FTO/99.9% | Mass Balance | 5.8 ppmv/ 0.38 lb/day | 0.072 | |
| 7647-01-0 | hydrogene chloride | A | FTO/0% | Mass Balance | total HCl 5.04 lb/day | 907 (see note) | |
| | | | | | | | |
| | | | | | | | |
| | | | | | | | |
| | | | | | | | |
| | | | | | | | |
| | | | | | | | |
| | | | | | | | |
| | | | | | | | |
| | | | | | | | |
| | | | | | | | |

* Use this form for reporting Hazardous Air Pollutants, Ozone Depleting Compounds, and other Non-Criteria Reportable Pollutant

THIS FORM IS AN ADDENDUM TO APEN # 1

(APPLICANT-PLEASE FILL IN APEN # IN THE LOWER RIGHT HAND CORNER OF APEN AND IN THE SPACE ABOVE)

Signature: Peter R. Quest Date: 11/12/97

☐ I would like the Division to calculate emissions of Non-Criteria Reportable Air Pollutants based on the production/consumption information listed on the APEN form.

APCD FORM 203H (8 96)

## EMISSION FACTOR

Based upon soil and groundwater sampling at the site, a mass balance calculation method was used for each of the detected compounds present at the site.

The uncontrolled emission factor for the source (influent to the FTO system) was estimated assuming a flow rate of 105 cfm. The uncontrolled emission factor is provided both in parts per million by volume (vapor) and in pounds per day (lb/day).

Requested emissions are based upon a 180 day demonstration test period with a control efficiency for the FTO system of 99.9%. The actual pounds of emissions for each compound (controlled) is listed here.

## HYDROGEN CHLORIDE (HCL)

Since the FTO process converts chlorinated hydrocarbons to $CO_2$, $H_2O$, and HCl, the maximum uncontrolled emissions for HCl was calculated for this site. Assuming all chlorine turns to HCl from the mass balance calculations provided on Addendum #1 of this APEN (non-criteria reportable air pollutant emission notice addendum form), a total uncontrolled emission of 0.21 lb/hr (5.04 lb/day) of HCl will be produced.

The total duration of this demonstration project is up to 180 days; therefore a total uncontrolled emission of 907 lbs HCl was calculated without the use of a caustic scrubber. In the event the influent loading rate to the FTO system increases dramatically (greater than 100%), a caustic scrubber could be employed to reduce the overall HCl emissions. At this time it is not anticipated the use of a caustic scrubber would be necessary, therefore controlled emissions of HCl was not calculated.

# STATE OF COLORADO

Roy Romer, Governor
Patti Shwayder, Executive Director
*Dedicated to protecting and improving the health and environment of the people of Colorado*

4300 Cherry Creek Dr. S.
Denver, Colorado 80246-1530
Phone (303) 692-2000
Located in Glendale, Colorado

Laboratory and Radiation Services Division
8100 Lowry Blvd.
Denver CO 80220-6928
(303) 692-3090

*http://www.cdphe.state.co.us*

Colorado Department of Public Health and Environment

January 5, 1998

ACTION: PERMIT EXEMPTED
APEN REQUIRED

Attn.: David Williams
AIR FORCE BASE CONVERSION AGENCY
800 N. Spruce Way, Building 625, Lowry AFB
Denver, CO 80220

Re: Permit Application number 97DE0888 for one (1) Thermatrix Flameless Thermal Oxidation Unit testing operation at 701 N. Yosemite Circle, Source Area Reduction System, Lowry AFB, Denver County, Colorado.

Dear Sir or Madam:

The Air Pollution Control Division has reviewed the emission information for this source and determined that no emission permit will be required at this time since uncontrolled emissions of volatile organic compounds are less than two tons per year. The filing of an Air Pollutant Emissions Notice (APEN) is required, however, since uncontrolled emissions of hazardous air pollutants are above reportable levels.

This exemption from permit requirements is issued in reliance upon the accuracy and completeness of information supplied by the applicant and is conditioned upon construction, installation, and operation in accordance with this information and with representations made by the applicant or the applicant's agents. Specifically, this exemption has been granted provided that the following information is accurate and complete:

1. Hydrocarbon emissions will not exceed 2 tons per year. Actual emissions, as calculated in the Division's Preliminary Analysis, are 0.63 ton per year. This is based on a throughput of 560 cfm.

2. Records of actual emission calculations shall be maintained and made available to the Division for inspection upon request.

Actual air pollutant emissions, on uncontrolled bases and as calculated in the Division's Preliminary Analysis, are as follows:

| | |
|---|---|
| Volatile Organic Compounds (VOC): | 0.63 tons per year; |
| Hazardous Air Pollutants (HAPs): | 2,060 pounds per year. |

Any changes with respect to the original submittal which would result in increases in either emissions or ambient air impacts, or which would result in the emission of any pollutants not listed in the original submittal, automatically nullifies this exemption. Before actually making any such change, you must apply to the Division for a new exemption based on the anticipated change; if the new exemption is denied by the Division, you will have to obtain a permit BEFORE implementing the change.

In accordance with C.R.S. 25-7-114.1, the Air Pollutant Emission Notice (APEN) associated with this source is valid for a term of five years. The five year term for this APEN expires on November 18, 2002. A revised APEN shall be submitted no later than 30 days before the five year term expires.

Sincerely,

Sunday A. Fadeyi
Permit Engineer/Reviewer
Stationary Sources Program
Air Pollution Control Division

cc: Denver Department of Health and Hospitals

OPTIONAL FORM 99 (7-90)

**FAX TRANSMITTAL** # of pages ▶ 1

| | |
|---|---|
| To Pete Guest | From DAVID WILLIAMS |
| Dept./Agency PARSONS | Phone # 676-4016 |
| Fax # 831-8208 | Fax # 676-4008 |

NSN 7540-01-317-7368 5099-101 GENERAL SERVICES ADMINISTRATION

031/0023/016

File 728414.05000
Corresp / Regulatory Nego
cc: P. Guest
S. Arch
T. Or
M. Vessely

# STATE OF COLORADO

Roy Romer, Governor
Patti Shwayder, Executive Director

*Dedicated to protecting and improving the health and environment of the people of Colorado*

4300 Cherry Creek Dr. S.
Denver, Colorado 80246-1530
Phone (303) 692-2000
Located in Glendale, Colorado

Laboratory and Radiation Services Division
8100 Lowry Blvd.
Denver CO 80220-6928
(303) 692-3090

*http://www.cdphe.state.co.us*

Colorado Department of Public Health and Environment

December 23, 1997

Attn: David Williams
Air Force Base Conversion Agency
800 N. Spruce Way, Building 625, Lowry AFB
Denver, CO 80220

Re: Construction Permit Application No. 97DE0888

Dear Applicant:

The Colorado Air Pollution Control Division has received and logged in your construction permit application for a Thermatrix Flameless Thermal Oxidation Unit rated at 560.0 acfm located at 701 N. Ysemite Circle, Source Area Reduction System, Lowry AFB, Denver in Denver County, Colorado State. Your application has been given permit number **97DE0888**, and is now ready for initial review.

If you should have any questions concerning the status of your permit application, please call me at **(303) 692-3202**. When calling, it would be helpful, if you can reference the permit number listed above.

The next step in processing your construction permit application is to determine if all the information we need is contained in your application. If so, we will begin our preliminary engineering analysis. If information is missing, I will contact you in the near future to obtain the needed material.

State law requires that the Division determine the completeness of an application within 60 days of receipt. If you do not hear from the Division by **January 18, 1998**, you can assume that your application is complete.

****PLEASE NOTE: YOU CAN NOW READ YOUR PERMIT STATUS ON THE INTERNET****

It is now possible for your company to view the status of your air pollution construction permit application directly on the Internet. The Colorado Air Pollution Control Division is now providing construction permit status information on the World Wide Web.

031/0023/016

The information provided includes: Company name, air pollution source, permit number, application received date, application status, review engineer, and review engineer's phone number. Updates are provided at least once a week.

You can access your permit status at the following address:

**http://www.state.co.us/gov_dir/cdphe_dir/ap/ss/sspcpt.html**

Sincerely yours,

Sunday A. Fadeyi
Engineer/Reviewer
Stationary Sources Program
Air Pollution Control Division

# VERSAR'S APEN FOR

# SOURCE AREA REDUCTION SYSTEM

NOVEMBER 3, 1997

# APPLICATION FOR CONSTRUCTION PERMIT OR PERMIT MODIFICATION
## (previously referred to as EMISSION PERMIT)

This application must be filled out completely except for #14 and #15: otherwise, application will be considered incomplete
SEE INSTRUCTIONS ON REVERSE SIDE. Mail completed application, APENs, and filing fee to:

*Colorado Department of Public Health and Environment*
*Air Pollution Control Division*
*4300 Cherry Creek Drive South, APCD-SS-B1*
*Denver, Colorado 80222-1530*

*Telephone: (303)692-3150*

1. *Permit to be issued to:*
Air Force Base Conversion Agency

2. *Mailing Address:* *State:* CO
800 N. Spruce Way, Building 625 Lowry AFB, Denver, CO *Zip Code:* 80220

3a. *Agent for Service (See No. 3 on reverse):* Mr. David Williams

3b. *Federal Tax Identification Number:* N/A Exempt

4a. *General Nature of Business:* Environmental

4b. *SIC Code:* 8744

5a. *Air Pollution Source Description:*
Dual-Phase Extraction Vapor-Phase Granular Activated Carbon Discharge

5b. *Days per year source will operate:* 365

6a. *Source Location Address (Include Location Map):*
701 N. Yosemite Circle, Lowry AFB, Denver, CO
(If using Township and Range, give directions and distance from nearest town or intersection.) *County:* Denver

6b. *UTM Coordinates (in km)*
509.4 H 4397.4 V

7. ESTIMATED COSTS:
7a. *Source, Process Equipment or Project:*
Cap. Cost $ 757,000

**Air Pollution Control Procedures or Equipment**
7b. *Capital Cost:* $ 22,800
7c. *Operating Cost:* $ 107,800

8a. **STATUS**
- ☒ *New Air Pollution Source*
- ☐ *Modification to Permitted Source (Control Equipment added, process change, etc.):* _____
- ☐ *Transfer of Ownership — Transferred from:* _____
- ☐ *Existing Source- not permitted (Include Date of Source Start-up):* _____
- ☐ *Requesting to limit a source's Potential to Emit for criteria or Hazardous Air Pollutants using Regulation No. 3 (for new and existing sources)*
- ☐ *Requesting to limit a source's Potential to Emit for Hazardous Air Pollutants only using Regulation No. 8 (for existing sources only)*
- ☐ *Other:*

*Projected Dates for Construction to:*
8b. *Begin:* Sept. 15, 1997 8c. End: Dec. 31,1997

8d. *Projected Source Startup Date:* Jan. 1, 1998

9. *Enclose check to cover APEN FILING FEES. One APEN should be filed for each emission point*
*NOTE: Additional processing fees must also be paid prior to permit issuance.*
1 APENS @ **$100.00** per APEN = $ 100.00

10. *SIGNATURE OF LEGALLY AUTHORIZED PERSON (NOT Vendor or Equipment Manufacturer)*

11a. *Date Signed:* 11/03/97

11b. Phone:( 303 ) 676-4016
Fax: ( 303 ) 676-4008

12. *Type or Print name and official title of person signing item 10.*
. David Williams - BRAC Environmental Coordinator

13. **Check appropriate box if you want:**
a. ☐ *Copy of preliminary analysis conducted by Division*
b. ☐ *To review a draft of the permit prior to issuance*
Note: Checking either item could result in increased fees and/or processing time. See Reverse.

for Agency Use Only
14. DATE RECEIVED

15. PERMIT NUMBER

PCD:SSP:200C (Rev. 9/96dmm):wp6.1 k:\forms\app96.001

# AIR POLLUTANT EMISSION NOTICE

PERMIT No.: _____ AIRS ID.: ___/___/___

FIRM NAME: Air Force Base Conversion Agency
MAIL ADDRESS: 300 N. Spruce Way, Bldg. 625, Lowry AFB, Denver
PLANT NAME & LOCATION: Source Area Reduction System 701 N. Yosemite Circle, Lowry AFB — STATE: CO ZIP: 80220
HOME-BASE FOR PORTABLE SOURCES: None — COUNTY: Denver
PERSON TO CONTACT REGARDING THIS INFORMATION: Mr. David Williams, BRAC Environmental Coord. — TITLE — PHONE: (303) 676-4016
GENERAL DESCRIPTION OF THIS PLANT'S FUNCTION: Dual-Phase Extraction and Treatment — FEDERAL TAX I.D. NO. N/A Exempt

| A. GENERAL INFORMATION | | Normal Operation of This Source | | | Process Seasonal Throughput (% of Annual) | | | | ADDITIONAL INFORMATION OR REMARKS: |
|---|---|---|---|---|---|---|---|---|---|
| No. of Employees | Land Area | Hours/Day | Days/Week | Weeks/Year | Dec-Feb | Mar-May | Jun-Aug | Sep-Nov | |
| | 0.7 | 24 | 7 | 52 | 25 | 25 | 25 | 25 | N/A |

B. STACK OR VENT INFORMATION (Identify below which stack if plant has two or more; refer to attached sketch of plant layout)

| Height | Diameter | Temperature | Flow Rate | Velocity | Moisture | Plant ID No. for Stack |
|---|---|---|---|---|---|---|
| 10 ft | 0.33 ft | 100 °F | 262.5 ACFM | 3,008 ft/min | 2.5 % | |

| C. FUEL INFORMATION | Design Input Rate ($10^6$ BTU/HR) | Kind of Fuel Burned | Annual Fuel Consumption | | Fuel Heating Value: (BTU/lb, BTU/gal, or BTU/SCF) | Per Cent by Weight | | Seasonal Fuel Use (% of Annual Use) | | | | Space Htg (% Ann.) |
|---|---|---|---|---|---|---|---|---|---|---|---|---|
| Description of Combustion Unit | | | Requested level | Data year level | | Sulfur | Ash | Dec-Feb | Mar-May | Jun-Aug | Sep-Nov | |
| N/A | N/A | N/A | N/A | N/A | N/A | N/A | N/A | N/A | N/A | N/A | N/A | N/A |
| Make/Model: | | | | | | | | | | | | |
| Serial No. | | | | | | | | | | | | |

| D. PROCESS INFORMATION | Raw Materials Used | Raw Materials-Annual Consumption | | Design Process Rate | Finished Product Description | Finished Product-Annual Output | |
|---|---|---|---|---|---|---|---|
| Description of Processing Unit | Description | Requested level | Data year level | (Specify Units/Hour) | | Requested level | Data year level |
| Dual-Phase Extraction System | N/A | N/A | N/A | 211 SCFM | N/A | N/A | |
| Make/Model: | | | | | | | |
| Serial No.: | | | | | | | |

E. POLLUTION CONTROL EQUIPMENT

| Pollutant | Type of Control Equipment: Primary | Secondary | Overall Collection Efficiency | ESTIMATED EMISSIONS (TONS/YEAR) AT THROUGHPUTS REQUESTED ABOVE: CONTROLLED | UNCONTROLLED | ACTUAL EMISSIONS (DATA YEAR) | ESTIMATION METHOD |
|---|---|---|---|---|---|---|---|
| Particulate | None | None | N/A | 0 | 0 | N/A | --- |
| $PM_{10}$ | None | None | N/A | 0 | 0 | N/A | --- |
| $SO_x$ | None | None | N/A | 0 | 0 | N/A | --- |
| $NO_x$ | None | None | N/A | 0 | 0 | N/A | --- |
| VOC | Granular Activated Carbon | | 98.8 | 0.029 | 2.4 | N/A | Mass Balance |
| CO | None | None | N/A | 0 | 0 | N/A | --- |

PLEASE USE APCD NON-CRITERIA REPORTABLE AIR POLLUTANT ADDENDUM FORM TO REPORT SUCH POLLUTANTS OR POLLUTANTS NOT LISTED ABOVE.

☐ CHECK HERE IF YOU WISH THE DIVISION TO CALCULATE YOUR EMISSIONS. SEE "EMISSION ESTIMATES" INSTRUCTIONS ON BACK.

CHECK ALL BOXES THAT APPLY
- ☐ New or previously unreported source*
- ☐ Requesting modification of existing permit†‡
- ☐ Change in emissions, throughputs or equipment‡
- ☐ Transfer of ownership (List previous owner in REMARKS section of box A.)‡
- ☐ Previous APEN is expiring‡
- ☐ Request for Emission Reduction Credit†‡
- ☐ (Specify)_____

* Complete all applicable portions of APEN
† Complete "Requested Level" values for permit limits
‡ Complete all information above box A, and those remaining portions which reflect changes

Signature of Person Legally Authorized to Supply Data: — DATE: 11/03/97 — DATA YEAR (See Instructions on Reverse):

Typed Name and Title: Mr. David Williams - BRAC Environmental Coordinator — Date source began or will begin operation: January 1, 1998

THIS NOTICE IS VALID FOR FIVE YEARS. A revised notice shall be filed prior to this expiration date, whenever a permit limitation must be modified, whenever control equipment is changed, and annually whenever a significant emission change occurs. For specific details see Regulation 3, Part A, § II.C.1.

A $100 FILING FEE IS REQUIRED FOR EACH NOTICE FILED.

Send completed forms with fees to:

Colorado Dept. of Public Health & Environment
Air Pollution Control Division
4300 Cherry Creek Drive South, APCD-SS-B1
Denver, Colorado 80222-1530

APEN # 1 of 1

For Information, Call (303) 692-3150

# NON-CRITERIA REPORTABLE AIR POLLUTANT EMISSION NOTICE ADDENDUM FORM *

(Instructions on reverse side)

FIRM NAME Air Force Base Conversion Agency

PROCESS DESCRIPTION Dual-Phase Extraction and Treatment System

Distance to nearest property line from stack (or release point)? 2,500 feet

Stack height (or release point height)? 10 feet

| Chemical Abstract Service Number | Chemical Name | Reporting Bin | Control Equipment/ Efficiency | Emission Factor (include units) | Emission Factor Source | Requested Emissions (lbs/yr) | Data Year Actual Emissions (lbs/yr) |
|---|---|---|---|---|---|---|---|
| 75-01-4 | Vinyl Chloride | A | Vapor-Phase Carbon/0% | Mass Balance | --- | 54.75 | N/A |
| 75-35-4 | 1,1-Dichloroethene | A | Vapor-Phase Carbon/100% | Mass Balance | --- | 0.0 | N/A |
| 540-59-0 | CIS-1,2-Dichloroethene | | Vapor-Phase Carbon/100% | Mass Balance | --- | 0.0 | N/A |
| 540-59-0 | Trans-1,2-Dichloroethene | | Vapor-Phase Carbon/100% | Mass Balance | --- | 0.0 | N/A |
| 71-55-6 | 1,1,1-Trichloroethane | C | Vapor-Phase Carbon/100% | Mass Balance | --- | 0.0 | N/A |
| 79-01-6 | Trichloroethene | C | Vapor-Phase Carbon/100% | Mass Balance | --- | 0.0 | N/A |
| 127-18-4 | Tetrachloroethene | A | Vapor-Phase Carbon/100% | Mass Balance | --- | 0.0 | N/A |
| | | | | | | | |
| | | | | | | | |
| | | | | | | | |
| | | | | | | | |
| | | | | | | | |
| | | | | | | | |
| | | | | | | | |
| | | | | | | | |
| | | | | | | | |
| | | | | | | | |
| | | | | | | | |

* Use this form for reporting Hazardous Air Pollutants, Ozone Depleting Compounds, and other Non-Criteria Reportable Pollutant

THIS FORM IS AN ADDENDUM TO APEN # 1

(APPLICANT-PLEASE FILL IN APEN # IN THE LOWER RIGHT HAND CORNER OF APEN AND IN THE SPACE ABOVE)

Signature: _____ Date: 11/03/97

☐ I would like the Division to calculate emissions of Non-Criteria Reportable Air Pollutants based on the production/consumption information listed on the APEN form.

APCD FORM 200H (8/96)

# CITY AND COUNTY OF DENVER

WELLINGTON E. WEBB
Mayor

**DEPARTMENT OF ENVIRONMENTAL HEALTH**

PUBLIC HEALTH INSPECTION
Food Safety 285-4074
Child Care Licensing 285-4075
FAX: (303) 285-5618
ENVIRONMENTAL PROTECTION 285-4053
FAX: (303) 285-5621
1391 SPEER BOULEVARD
DENVER, COLORADO 80204-2555

June 15, 1998

Tom Dragoo
Parsons Engineering, Inc.
1700 Broadway, Suite 900
Denver, CO 80202

Dear Mr. Dragoo: 6/18/98.

On May ~~21~~ 9, 1998 at approximately 10:00 a.m., sound pressure levels (noise) were taken from sound emanating from the Flameless Thermal Oxidation Unit (FTO) operated by Parsons Engineering located at Lowry Air Force Base. At a distance of approximately 25 feet, the FTO was read at 60 dBA (decibels on the A-weighing network). As such, the unit was found to be in compliance with the City and County of Denver Noise Control Ordinance (Chapter 36, R.M.C.) at that time under current operating conditions.

Please feel free to contact me at 285-4069 if you have any questions.

Sincerely,

Edward E. Kiely
Environmental Protection Specialist

# APPENDIX C

# ANALYTICAL DATA REPORTS 1 THROUGH 5

**PARSONS**

**Parsons Engineering Science, Inc.**
1700 Broadway, Suite 900 • Denver, Colorado 80290 • (303) 831-8100 • Fax: (303) 831-8208

June 12, 1998

Mr. Jim Gonzales
AFCEE/ERT
3207 North Road, Building 532
Brooks AFB, Texas 78235-5363

RE: Air Force Contract No. F41624-94-D-8136, Order 02803
Air Conformity Determination of Flameless Thermal Oxidation and Internal Combustion Engine for VOC Off-Gas Abatement
Analytical Data Report No. 1, Source Area Reduction System, Former Lowry Air Force Base, Colorado CDRL A007A

Dear Mr. Gonzales:

Please find enclosed two copies of Tables 1, 2, and 3 which constitute Analytical Data Report No. 1 prepared by Parsons Engineering Science, Inc. (Parsons ES) for the vapor samples collected during the month of May 1998, during the startup of the flameless thermal oxidation (FTO) treatment unit at the Source Area Reduction System (SARS), former Lowry Air Force Base, Colorado. The FTO treatment began treating contaminated soil vapors at 0800 hours on May 20, 1998. The volatile organic compound (VOC) destruction efficiency of the FTO Unit, calculated using data collected on May 22, 1998 exceeded 99.86 percent of all targeted compounds. Also, based on conversations with Mr. Pete Shingledecker of Versar, it appears the FTO unit is treating greater than 75-percent of the total SARS flow. This data report is being sent within 2 working days of receipt of the analytical laboratory results report.

Several unexpected VOCs were detected by the analytical laboratory in the May 20, 1997 pre-dilution influent sample. These compounds include 2-butanone and tetrahydrofuran. In addition 1,2,4-trimethylbenzene, 2-butanone, m,p-xylene, o-xylene, tetrahydrafuran, 1,4-dioxane, and toluene were detected in the effluent gas sample collected on May 20, 1997. Tetrahydrafuran is a solvent for high-grade polymers, especially polyvinyl chloride (PVC) solvents (MERCK and Co, Inc. 1983, page 1318), and may be generated from the incomplete combustion of PVC solvent welding compounds which were used to connect the FTO unit to the SVE system. No unexpected VOCs were detected in influent or effluent samples on May 22, 1998. Based on our experience at Plattsburgh AFB and Air Force Plant 4, the detections of unexpected compounds in the samples should not be a continuing problem (as demonstrated by the May 22, 1998 data). However, we will continue to monitor this closely.

The May 1998 data represent the following FTO treatment unit operating conditions:

- On May 18, 1998, Mr. Archabal (Parsons ES Phoenix) and Mr. Tom Dragoo (Parsons ES Denver) traveled to the former Lowry AFB to startup and optimize the FTO unit. On this date, Mr. Archabal and Mr. Dragoo prepared the unit for startup. Also, on this date, Mr. Guest transmitted an e-mail message to Mr. Bruce Kroehl (AFBCA) that provided an update on the startup of the FTO unit.

- On May 19, 1998, at 1130 hours the FTO unit was placed in the profile mode. At 1320 hours the FTO unit was placed in run mode and continued to operate over night on 100 percent supplemental fuel (i.e., propane) without treating vapors from the SARS.

- On May 20, 1998, at 0800 hours the FTO unit began treating vapors from the SARS. The FTO unit is operating on 75 percent vapors and 25 percent dilution air. This ratio was selected to enable the FTO unit to continue to operate in the event of a shut down of the SARS. If the FTO unit operates on 100 percent vapors a shut down of the SARS will most likely cause the FTO unit to shut down because the FTO unit can not adjust to sudden changes in flow rates, which cause a low flow shut down of the FTO unit. On this date, Mr. Dragoo provided an update to Mr. Kroehl on the startup of the FTO unit.

- On May 20, 1998, at 1000 hours influent and effluent samples were collected from the FTO unit. Two influent samples were collected: one at the influent to the oxidizer (includes dilution air), and one prior to the moisture separator. The sample collected prior to the moisture separator will be compared to the results of a vapor sample collected by Versar at the influent to the SARS. The Parsons ES samples were sent to Air Toxics, Ltd. in Folsom, California for analysis by US Environmental Protection Agency (EPA) Method TO-14. At the time of sample collection, the FTO unit was treating vapors from the SARS at a flow rate of 105 cubic feet per minute (cfm), and the vacuum was 12 inches of water. The average influent TVH concentration (measured with a hand-held photoionization detector [PID]) was 50 parts per million by volume (ppmv).

- On May 21, 1998, Mr. Dragoo contacted Mr. Ed Kiely (Denver Department of Environmental Health) regarding Mr. Kiely visiting the site to take noise measurements to ensure that the FTO unit is in compliance with the City of Denver noise ordinance. In November 1997, Mr. Guest contacted Mr. Kiely, who said that the noise ordinance allows 65 decibels at a distance of 25 feet between 7:00 a.m. and 7:00 p.m., and 60 decibels at a distance of 25 feet between 7:00 p.m. and 7:00 a.m. At the November 19, 1997 Restoration Advisory Board (RAB) meeting, Mr. John Student (RAB member, Denver Department of Environmental Health) expressed concern that the FTO unit may exceed the noise ordinance. Mr. Kiely said he would come to the site next week.

- On May 22, 1998, at 1000 hours, Mr. Dragoo and Mr. Archabal collected influent and effluent samples from the FTO unit. At the time of sample collection, the FTO unit was treating vapors from the SARS at a flow rate of 105 cubic feet per minute (cfm), and the vacuum was 12 inches of water. The average influent TVH concentration (measured with a hand-held PID) was 40 to 50 ppmv. Also on May 22, 1998, the autodialer alarm system was installed by Advanced Security Technologies, Inc. On this date, Mr. Archabal traveled back to Phoenix, Arizona. On this date, Mr. Guest left a voice mail message for Mr. Gonzales informing him of the status of the startup of the FTO unit.

- On May 26, 1998, Ms. Blakemore (Parsons ES Denver) contacted Mr. Dragoo and Mr. Guest to inform them the FTO unit was down. Based on the run hour meter, the FTO unit shut down at 0705 hours on May 26, 1998. Mr. Dragoo contacted Mr. Dietrich Whitesides (Versar), who informed Mr. Dragoo that the SARS shut down the morning of May 26th, which may have caused the FTO unit to shut down due to low flow. On this date Mr. Guest transmitted an e-mail message to Mr. Kroehl and Mr. Gonzales informing them of the FTO unit shut down. Based on conversations with Mr. Kroehl (Base point-of-contact), representatives at Lowry Redevelopment Authority (LRA), and observations of the controls of the FTO unit Parsons ES determined that the cause of shut down was a brief interruption of power to the unit.

- On May 28, 1998, Mr. Dragoo and Mr. Plaehn (Parsons ES Denver) traveled to the former Lowry AFB to restart the FTO unit. Mr. Dragoo placed the unit in pre-heat, profile, and run modes. The unit was in the run mode at approximately 1900 hours, however because Versar was performing operational checks of the SARS, the FTO unit did not begin treating vapors from the SARS. The FTO unit was left in the run mode overnight, operating on 100 percent propane.

- On May 29, 1998 Mr. Dragoo and Mr. Plaehn traveled to the former Lowry AFB to open the valve that connects the FTO unit to the SARS and optimize the flow rate of vapors from the SARS to the FTO unit. At 1045 hours the FTO unit was treating vapors from the SARS. The FTO unit was operating on 75 percent vapors from the SARS and 25 percent dilution air. The FTO unit was treating vapors from the SARS at a flow rate of 105 cfm, and the vacuum was 12 inches of water. The average influent TVH concentration (measured with a hand-held PID) was 40 to 50 ppmv. On this date, Mr. Guest transmitted an e-mail message to Mr. Kroehl and Mr. Gonzales informing them of the status of FTO operation.

- On May 29, 1998, Mr. Kiely came to the site to take noise measurements to ensure that the FTO unit is in compliance with the City of Denver noise ordinance. Mr. Kiely's measurements indicated the FTO unit emits 59 decibels at a distance of 25 feet with the security gate open. Mr. Kiely said it was not necessary to take a measurement with the gate closed and he said the unit is in compliance with the City of Denver noise ordinance. Mr. Kiely said he would send a letter to Parsons ES documenting his measurements and findings.

Per Contracts Data Requirements List (CDRL) A007A, one reproducible copy of the enclosed data tables has been provided to AFCEE/MSR on a 3.5-inch diskette in IBM-compatible format. If you have additional questions or comments please call me at (303) 764-1919 or Mr. Steve Archabal at (602) 852-9110.

Sincerely,

PARSONS ENGINEERING SCIENCE, INC.

Peter R. Guest

Peter R. Guest, P.E.
Project Manager

Enclosures

cc: Mr. Mike Deaton, HSC/PKVAB (LOT only)
Mr. Jane Keller, AFCEE/MSR (LOT and diskette only)
Mr. Bill Jacobs, Booz•Allen & Hamilton
Mr. Mark Lucas, Waste Policy Institute
Mr. John Miller, AFCEE/ERB
Mr. Bruce Kroehl, AFBCA - Lowry
Mr. Mike Galvin, Versar
Mr. Bill Gallant, Versar
Mr. Steve Archabal, Parsons ES Phoenix
Mr. Chris Gable, Thermatrix, Inc.
Mr. Jack Sullivan, Parsons ES Oklahoma

# TABLE 1
## DETECTED ANALYTES IN EXTRACTED VAPOR STREAM SAMPLES
## MAY 1998
### FLAMELESS THERMAL OXIDATION DEMONSTRATION
### SOURCE AREA REDUCTION SYSTEM
### FORMER LOWRY AIR FORCE BASE, COLORADO

| | Detected Concentration (ppbv)[a] | | | | | | |
|---|---|---|---|---|---|---|---|
| Analyte | Pre-Dilution Influent Sample SARS-IK01-80 5/20/98 | Post Dilution Influent Sample SARS-IOX1-105 5/20/98 | Effluent Sample SARS-EOX1-105 5/20/98 | Destruction Efficiency (percent) | Post Dilution Influent Sample SARS-IOX2-105 5/22/98 | Effluent Sample SARS-EOX2-105 5/22/98 | Destruction Efficiency (percent) |
| vinyl chloride | 120 | 100 | <5.4[a] | >99.99 | 100 | <5.3 | >99.99 |
| 1,1-dichlorothene | 280 | 210 | <5.4 | >99.99 | 200 | <5.3 | >99.99 |
| methylene chloride | 130 | 110 | <5.4 | >99.99 | 100 | <5.3 | >99.99 |
| cis-1,2-dichloroethene | 940 | 700 | <5.4 | >99.99 | 680 | <5.3 | >99.99 |
| 1,1,1-trichloroethane | 860 | 650 | <5.4 | >99.99 | 650 | <5.3 | >99.99 |
| tetrachloroethene | 210 | 160 | <5.4 | >99.99 | 180 | <5.3 | >99.99 |
| toluene | <53 | <35 | 7.2 | NA[c] | <42 | <5.3 | NA |
| m,p-Xylene | <53 | <35 | 12 | NA | <42 | <5.3 | NA |
| o-Xylene | <53 | <35 | 6 | NA | <42 | <5.3 | NA |
| 1,2,4-trimethylbenzene | <53 | <35 | 6.1 | NA | <42 | <5.3 | NA |
| 2-butanone | 300 | <140 | <22 | NA | <170 | <21 | NA |
| Tetrahydrofuran | 960 | <140 | 38 | NA | <170 | <21 | NA |
| cyclohexane | <210 | <140 | 23 | NA | <170 | <21 | NA |
| 1,4-dioxane | <210 | <140 | 24 | NA | <170 | <21 | NA |
| trichloroethene | 9200 | 7000 | <5.4 | >99.99 | 6900 | 9.8 | 99.86 |
| THC[d] | 15000 | 9500 | 540 | 94.32 | 8900 | <53 | >99.99 |

[a] ppbv = parts per billion by volume, as determined by Air Toxics, Folsom, CA using USEPA Method TO-14 GC/MS Full Scan. See Table 2 for field measurements and system operating conditions at the time of sampling.

[b] <5.3 = Less than the stated detection limit.

[c] NA = Not applicable.

[d] THC = Total hydrocarbons referenced to heptane (molecular weight = 100).

022\728414\792.xls

TABLE 2

FIELD MEASUREMENTS AND SYSTEM OPERATING CONDITIONS

FLAMELESS THERMAL OXIDATION DEMONSTRATION

SOURCE AREA REDUCTION SYSTEM

FORMER LOWRY AIR FORCE BASE, COLORADO

| Date[a] | Time | Possible Run Time (hours) | Cumulative Possible Run Time (hours) | Run Time Meter (hours) | Run Time Since Last Event (hours) | Cumulative Run Time[b] (hours) | Cumulative Down Time Due To Unit Problems (hours) | Cummulative Down Time Due To External Problems (hours) | Flow Rate Into Oxidizer (scfm) | Fume Portion of Flow (percent) | Ambient Portion of Flow (percent) | Comments |
|---|---|---|---|---|---|---|---|---|---|---|---|---|
| 5/20/98 | 0800 | 0 | 0 | NR[c] | 0 | 0.0 | 0.0 | 0.0 | 105 | 75 | 25 | Collected SARS-IKO1-80, SARS-IOX1-105, and SARS-EOX1-105 |
| 5/21/98 | 1017 | 26.2 | 26.2 | 5725.0 | 26.2 | 26.2 | 0.0 | 0.0 | | | | |
| 5/22/98 | 1030 | 24.2 | 50.4 | NR | 24.2 | 50.4 | 0.0 | 0.0 | 105 | 75 | 25 | Collected SARS-IOX2-105 and SARS-EOX2-105 |
| 5/26/98 | 0200 | 87.5 | 137.9 | 5841.8 | 87.5 | 137.9 | 0.0 | 0.0 | | | | System down due to power outage |
| 5/28/98 | 0910 | 55.2 | 193.1 | 5841.8 | 0.0 | 137.9 | 0.0 | 55.2 | 105 | 75 | 25 | System restart |
| | | | **Cumulative Operational Efficiency =** | | | **71%** | | | | | | |

[a] Vapors from IRAEW-01 through IRAEW-15 are being treated.

[b] Cumulative run time includes time during start-up (i.e., purge, preheat, cool bed, and profile modes).

[c] NR = not recorded.

# TABLE 3
## HYDROCARBON MASS REMOVAL AND EMISSIONS
### FLAMELESS THERMAL OXIDATION DEMONSTRATION
### SOURCE AREA REDUCTION SYSTEM
### FORMER LOWRY AIR FORCE BASE, COLORADO

| Date Sampled | Extraction Wells | Days of Operation | Influent THC[a] Concentration (ppmv)[b] | Influent THC[a] Concentration (μg/L)[c] | Flow Rate (scfm) | Effluent THC Concentration (ppmv) | Effluent THC Concentration (μg/L) | Pounds of THC Remove | Total Daily THC Emissions[b] (pounds/day) |
|---|---|---|---|---|---|---|---|---|---|
| 5/20/98 | IRAEW 01-15 | 1.0 | 10 | 39 | 105 | 5.4 | 22 | 0.4 | 0.2 |
| 5/22/98 | IRAEW 01-15 | 2.0 | 9 | 37 | 105 | <0.05 | <0.22 | 0.7 | negligible |
| | **Total =** | 3.0 | | | | | **Total =** | **1.1** | |

[a] Values given are for total hydrocarbons (THC) referenced to heptane (molecular weight =100) after addition of dilution air.

[b] ppmv = parts per million by volume, as determined by the analytical laboratory.

[c] μg/L = micrograms per liter, as determined by the analytical laboratory.

**PARSONS**

**Parsons Engineering Science, Inc.**
1700 Broadway, Suite 900 • Denver, Colorado 80290 • (303) 831-8100 • Fax: (303) 831-8208

July 8, 1998

Mr. Jim Gonzales
AFCEE/ERT
3207 North Road, Building 532
Brooks AFB, Texas 78235-5363

RE: Air Force Contract No. F41624-94-D-8136, Order 02803
Air Conformity Determination of Flameless Thermal Oxidation and Internal Combustion Engine for VOC Off-Gas Abatement
Analytical Data Report No. 2, Source Area Reduction System, Former Lowry Air Force Base, Colorado CDRL A007A

Dear Mr. Gonzales:

Please find enclosed two copies of Tables 1, 2, and 3 which constitute Analytical Data Report No. 2 prepared by Parsons Engineering Science, Inc. (Parsons ES) for the vapor samples collected during the month of June 1998, during the demonstration of the flameless thermal oxidation (FTO) treatment unit at the Source Area Reduction System (SARS), former Lowry Air Force Base, Colorado. The FTO unit began treating contaminated soil vapors at 0800 hours on May 20, 1998. The volatile organic compound (VOC) destruction efficiency of the FTO Unit, calculated using data collected on June 18, 1998 exceeded 99.99 percent for all targeted compounds and 98.98 for total hydrocarbons (THC). The FTO unit continues to treat greater than 75-percent of the total SARS flow. This data report is being sent within 7 working days of receipt of the analytical laboratory results report.

No unexpected VOCs were detected in influent or effluent samples on June 18, 1998. The June 1998 data represent the following FTO treatment unit operating conditions:

- On June 3, 1998, Ms. Judy Blakemore was contacted by Advance Security Technologies, Inc. informing her that the FTO unit shut down. The FTO unit shut down at approximately 1622 hours as a result of Versar shutting down the Source Area Reduction System (SARS) to perform maintenance activities. The FTO unit shut down due to low flow because it was not able to pull vapors back through the granular activated carbon (GAC) units of the SARS. On this date, Mr. Guest left a voice mail message for Mr. Pete Shingledecker (Versar) requesting that he notify Parsons ES in the future if Versar will be performing maintenance activities that may shut down the FTO unit. If Parsons ES is notified in advance, the FTO unit can be switched onto 100 percent propane during the down time of the SARS, then converted back to treating vapors from the SARS after the SARS is back in operation. This will be more efficient than having to restart the FTO unit, which involves going through an approximate 8-hour start-up period.

- On June 4, 1998, Mr. Guest transmitted an e-mail message to Mr. Gonzales, Mr. Bruce Kroehl (Base POC), and Mr. John Miller (AFCEE/ERB) informing them of the operational status of the FTO unit and that Parsons ES will restart the unit on June 4, 1998.

- On June 4, 1998, Mr. Bill Plaehn and Ms. Blakemore traveled to Lowry AFB to restart the FTO unit. The unit was treating vapors from the SARS at approximately 1530 hours. No problems were encountered during the re-start. The unit was treating approximately 105 cfm of vapors with 75-percent coming from the SARS and approximately 25-percent coming from ambient. Mr. Plaehn discussed with Mr. Shingledecker the maintenance activities Versar was performing on the SARS that caused the shut down of the FTO unit. Specifically, because of high temperatures, oil was vaporizing into the fume stream of the SARS. This oil recondensed down stream and needed to be drained. Versar could not freely drain the line because of the vacuum from the FTO unit. Therefore, not knowing that the FTO unit needed to pull through the GAC units, they closed the valve leading to the FTO unit. This abrupt change in flow shut down the FTO unit. Corrective measures that will be taken by Versar include: 1) tagging of the valve leading to the FTO unit indicating not to close the valve without contacting Parsons ES first; and 2) installation of a new thermostat which should reduce overall temperatures, which should eliminate oil vaporization, which should eliminate the need to drain the line.

- On June 5, 1998, Mr. Guest transmitted an e-mail message to Mr. Gonzales, Mr. Kroehl, and Mr. Miller informing them of the operational status of the FTO unit

- On June 9, 1998, at 0930 hours, Ms. Blakemore checked the FTO unit and observed that it was shut down. The unit apparently shut down over the weekend because it was operating on Friday (per Versar) and not on Monday (per Versar). No messages were received from Advance Security Technologies (the company that installed the remote monitoring system). The cause of the shut down was high water level in the moisture separator. Ms. Blakemore, drained the moisture separator, which contained oil from the SARS and condensate (water). The oil was separated from the water using sorbent mats. The mats will be properly disposed of. The water was discharged to a sump at the SARS and will be pumped to and treated by the Boundary Area Containment System (BACS). Ms. Blakemore conducted these activities with Mr. Dietrich Whitesides and Mr. Shingledecker (Versar). On this date, Mr. Guest transmitted an e-mail message to Mr. Gonzales, Mr. Kroehl, and Mr. Miller informing them of the operational status of the FTO unit, and that on June 10th Parsons ES will restart the unit and meet Mr. David Stafford from Advance Security Technologies to work out the problem of Parsons ES not being notified of shut downs.

- On June 10, 1998, Mr. Bill Plaehn and Ms. Blakemore traveled to Lowry AFB to restart the FTO unit. The unit was treating vapors from the SARS at approximately 1350 hours. No problems were encountered during the re-start. The unit was treating approximately 105 cfm of vapors with 75-percent coming from the SARS and approximately 25-percent coming from ambient.

- On June 11, 1998, Mr. Guest transmitted an e-mail message to Mr. Gonzales, Mr. Kroehl, and Mr. Miller informing them of the operational status of the FTO unit.

- On June 12, 1998, Parsons ES distributed Analytical Data Report No. 1 for the vapor samples collected during the month of May 1998, during the startup of the FTO unit at the SARS. The data report was distributed within 2 working days of receipt of the analytical laboratory results.

- On June 17, 1998, Parsons ES received a letter from Mr. Ed Kiely (Denver Department of Environmental Health) documenting the results of the sound pressure levels (noise) taken from sound emanating from the FTO unit on May 29, 1998. The unit was found to be in compliance with the City and County Noise Control Ordinance.

- On June 18, 1998, Mr. Bill Plaehn and Mr. Tom Dragoo traveled to Lowry AFB to collect influent and effluent samples from the FTO unit. At the time of sample collection (0900 hours), the FTO unit was treating vapors from the SARS at a flow rate of 105 cubic feet per minute (cfm) with 75-percent coming from the SARS and approximately 25-percent coming from ambient. The vacuum was 12 inches of water. The average influent TVH concentration (measured with a hand-held PID) was 18 to 20 parts per million by volume (ppmv). The samples were sent to Air Toxics, Ltd. in Folsom, California for analysis by US Environmental Protection Agency (EPA) Method TO-14. In addition to Mr. Dragoo and Mr. Plaehn, Ms. Blakemore and Mr. Tim Beltramo were trained on the sample collection procedures. Ms. Blakemore will support future sampling events in the event that Mr. Dragoo and/or Mr. Plaehn are unavailable.

- On June 19, 1998, Mr. Guest transmitted an e-mail message to Mr. Gonzales, Mr. Kroehl, and Mr. Miller informing them of the operational status of the FTO unit.

- On June 21, 1998, at approximately 1808 hours, the FTO unit shut down due to high water level in the moisture separator.

- On June 22, 1998, Mr. Guest transmitted an e-mail message to Mr. Mr. Gonzales, Mr. Kroehl, and Mr. Miller informing them that the FTO unit shut down on June 21st. The message stated that Ms. Blakemore checked the moisture separator on Friday, June 19th, and there was no liquid (water) in the separator. Also, during the week of June 15th, no liquids accumulated in the moisture separator. Parsons ES will evaluate the change in conditions that caused the increased formation of condensate.

- On June 22, 1998, Ms. Blakemore, drained the moisture separator, which contained oil from the SARS and condensate (water). The oil was separated from the water using sorbent mats. The mats will be properly disposed of. The water was discharged to a sump at the SARS and will be pumped to and treated by the BACS. Ms. Blakemore conducted these activities with Mr. Whitesides and Mr. Shingledecker (Versar).

- On June 22, 1998, Parsons ES forwarded Mr. Kiely's letter to Mr. Gonzales and Mr. Kroehl.

- On June 23, 1998, Mr. Dragoo and Mr. Beltramo traveled to Lowry AFB to restart the FTO unit. The unit was treating vapors from the SARS at approximately 1550 hours. No problems were encountered during the re-start. The unit was treating approximately 105 cfm of vapors with 75-percent coming from the SARS and approximately 25-percent coming from ambient.

- On June 25, 1998, Mr. Guest transmitted an e-mail message to Mr. Gonzales, Mr. Kroehl, and Mr. Miller informing them of the operational status of the FTO unit.

**Operational Efficiency**

The FTO unit has a cumulative operational efficiency of 71-percent from start-up. All of the down-time has been associated with problems external to the FTO unit (see Table 2).

Per Contracts Data Requirements List (CDRL) A007A, one reproducible copy of the enclosed data tables has been provided to AFCEE/MSR on a 3.5-inch diskette in IBM-compatible format. If you have additional questions or comments please call me at (303) 764-1919 or Mr. Steve Archabal at (602) 852-9110.

Sincerely,

PARSONS ENGINEERING SCIENCE, INC.

Peter R. Guest.

Peter R. Guest, P.E.
Project Manager

Enclosures

cc: Mr. Mike Deaton, HSC/PKVAB (LOT only)
Mr. Jane Keller, AFCEE/MSR (LOT and diskette only)
Mr. Bill Jacobs, Booz•Allen & Hamilton
Mr. Mark Lucas, Waste Policy Institute
Mr. John Miller, AFCEE/ERB
Mr. Bruce Kroehl, AFBCA - Lowry
Mr. Mike Galvin, Versar
Mr. Bill Gallant, Versar
Mr. Steve Archabal, Parsons ES Phoenix
Mr. Chris Gable, Thermatrix, Inc.
Mr. Jack Sullivan, Parsons ES Oklahoma

# TABLE 1
## DETECTED ANALYTES IN EXTRACTED VAPOR STREAM SAMPLES
## JUNE 1998
### FLAMELESS THERMAL OXIDATION DEMONSTRATION
### SOURCE AREA REDUCTION SYSTEM
### FORMER LOWRY AIR FORCE BASE, COLORADO

| | Detected Concentration (ppbv)[a] | | | | | | | | |
|---|---|---|---|---|---|---|---|---|---|
| Analyte | Post Dilution Influent Sample SARS-IOX1-105 5/20/98 | Effluent Sample SARS-EOX1-105 5/20/98 | Destruction Efficiency (percent) | Post Dilution Influent Sample SARS-IOX2-105 5/22/98 | Effluent Sample SARS-EOX2-105 5/22/98 | Destruction Efficiency (percent) | Post Dilution Influent Sample SARS-IOX3-105 6/18/98 | Effluent Sample SARS-EOX3-105 6/18/98 | Destruction Efficiency (percent) |
| vinyl chloride | 100 | <5.4[b] | >99.99 | 100 | <5.3 | >99.99 | 96 | <5.1 | >99.99 |
| 1,1-dichlorothene | 210 | <5.4 | >99.99 | 200 | <5.3 | >99.99 | 150 | <5.1 | >99.99 |
| methylene chloride | 110 | <5.4 | >99.99 | 100 | <5.3 | >99.99 | 66 | <5.1 | >99.99 |
| cis-1,2-dichloroethene | 700 | <5.4 | >99.99 | 680 | <5.3 | >99.99 | 480 | <5.1 | >99.99 |
| 1,1,1-trichloroethane | 650 | <5.4 | >99.99 | 650 | <5.3 | >99.99 | 650 | <5.1 | >99.99 |
| tetrachloroethene | 160 | <5.4 | >99.99 | 180 | <5.3 | >99.99 | 140 | <5.1 | >99.99 |
| toluene | <35 | 7.2 | NA[c] | <42 | <5.3 | NA | <25 | <5.1 | NA |
| m,p-Xylene | <35 | 12 | NA | <42 | <5.3 | NA | <25 | <5.1 | NA |
| o-Xylene | <35 | 6 | NA | <42 | <5.3 | NA | <25 | <5.1 | NA |
| 1,2,4-trimethylbenzene | <35 | 6.1 | NA | <42 | <5.3 | NA | <25 | <5.1 | NA |
| Acetone | <140 | <22 | NA | <170 | <21 | NA | <99 | 23 | NA |
| 2-butanone | <140 | <22 | NA | <170 | <21 | NA | <99 | <20 | NA |
| Tetrahydrofuran | <140 | 38 | NA | <170 | <21 | NA | <99 | <20 | NA |
| cyclohexane | <140 | 23 | NA | <170 | <21 | NA | <99 | <20 | NA |
| 1,4-dioxane | <140 | 24 | NA | <170 | <21 | NA | <99 | <20 | NA |
| trichloroethene | 7000 | <5.4 | >99.99 | 6900 | 9.8 | 99.86 | 6200 | <20 | >99.99 |
| THC[d] | 9500 | 540 | 94.32 | 8900 | <53 | >99.99 | 9400 | 96 | 98.98 |

[a] ppbv = parts per billion by volume, as determined by Air Toxics, Folsom, CA using USEPA Method TO-14 GC/MS Full Scan. See Table 2 for field measurements and system operating conditions at the time of sampling.

[b] < = Compound not detected, value shown represents the reporting limit.

[c] NA = Not applicable.

[d] THC = Total hydrocarbons referenced to heptane (molecular weight = 100).

# TABLE 2
## FIELD MEASUREMENTS AND SYSTEM OPERATING CONDITIONS
### FLAMELESS THERMAL OXIDATION DEMONSTRATION
### SOURCE AREA REDUCTION SYSTEM
### FORMER LOWRY AIR FORCE BASE, COLORADO

| Date[a] | Time | Possible Run Time (hours) | Cumulative Possible Run Time (hours) | Run Time Meter (hours) | Run Time Since Last Event (hours) | Cumulative Run Time[b] (hours) | Cumulative Down Time Due To Unit Problems (hours) | Cummulative Down Time Due To External Problems (hours) | Isolated Down Time (hours) | Flow Rate Into Oxidizer (scfm) | Fume Portion of Flow (percent) | Ambient Portion of Flow (percent) | Comments |
|---|---|---|---|---|---|---|---|---|---|---|---|---|---|
| 5/20/98 | 0800 | 0 | 0 | NR[c] | 0 | 0.0 | 0.0 | 0.0 | | 105 | 75 | 25 | Collected SARS-IKO1-80, SARS-IOX1-105, and SARS-EOX1-105 |
| 5/21/98 | 1017 | 26.2 | 26.2 | 5725.0 | 26.2 | 26.2 | 0.0 | 0.0 | | | | | |
| 5/22/98 | 1030 | 24.2 | 50.4 | NR | 24.2 | 50.4 | 0.0 | 0.0 | | 105 | 75 | 25 | Collected SARS-IOX2-105 and SARS-EOX2-105 |
| 5/26/98 | 0200 | 87.5 | 137.9 | 5841.8 | 87.5 | 137.9 | 0.0 | 0.0 | | | | | System down due to power outage |
| 5/28/98 | 0910 | 55.2 | 193.1 | 5841.8 | 0.0 | 137.9 | 0.0 | 55.2 | | 105 | 75 | 25 | System restart |
| 6/3/98 | 1622 | 151.3 | 344.4 | 5993.1 | 151.3 | 289.2 | 0.0 | 55.2 | | | | | System down due to SARS shut-down resulting in low flow |
| 6/4/98 | 0712 | 14.8 | 359.2 | 5993.1 | 0.0 | 289.2 | 0.0 | 69.9 | 14.7 | 105 | 75 | 25 | System restart |
| 6/4/98 | 2242 | 15.5 | 374.7 | 6008.6 | 15.5 | 304.7 | 0.0 | 69.9 | | | | | System down due to high water level in moisture seperator |
| 6/10/98 | 0655 | 128.2 | 502.9 | 6008.6 | 0.0 | 304.7 | 0.0 | 198.1 | | 105 | 75 | 25 | System restart |
| 6/18/98 | 900 | 186.7 | 689.6 | 6195.3 | 186.7 | 491.4 | 0.0 | 198.1 | | 105 | 75 | 25 | Collected SARS-IOX3-105 and SARS-EOX3-105 |
| 6/21/98 | 1813 | 275.3 | 778.2 | 6283.9 | 275.3 | 580.0 | 0.0 | 198.1 | | | | | System down due to high water level in moisture seperator |
| 6/23/98 | 1000 | 39.8 | 818 | 6283.9 | 0.0 | 580.0 | 0.0 | 237.9 | 39.8 | 105 | 75 | 25 | System restart |
| | | | **Cumulative Operational Efficiency =** | | | **71%** | | | | | | | |
| | | | | **Unit Problems Operational Efficiency =** | | | **100%** | | | | | | |
| | | | | | **External Problems Operational Efficiency =** | | | **71%** | | | | | |

[a] Vapors from IRAEW-01 through IRAEW-15 are being treated.

[b] Cumulative run time includes time during start-up (i.e., purge, preheat, cool bed, and profile modes).

[c] NR = not recorded.

# TABLE 3
## HYDROCARBON MASS REMOVAL AND EMISSIONS
### FLAMELESS THERMAL OXIDATION DEMONSTRATION
### SOURCE AREA REDUCTION SYSTEM
### FORMER LOWRY AIR FORCE BASE, COLORADO

| Date Sampled | Extraction Wells | Days of Operation | Influent THC[a] Concentration (ppmv)[b] | Influent THC[a] Concentration (µg/L)[c] | Flow Rate (scfm) | Effluent THC Concentration (ppmv) | Effluent THC Concentration (µg/L) | Pounds of THC Remove | Total Daily THC Emissions[b] (pounds/day) |
|---|---|---|---|---|---|---|---|---|---|
| 5/20/98 | IRAEW 01-15 | 1.0 | 10 | 39 | 105 | 5.4 | 22 | 0.4 | 0.2 |
| 5/22/98 | IRAEW 01-15 | 2.0 | 9 | 37 | 105 | <0.05 | <0.22 | 0.7 | negligible |
| 6/18/98 | IRAEW 01-15 | 24.0 | 9 | 37 | 105 | 0.10 | <0.23 | 8.5 | negligible |
| | **Total =** | 3.0 | | | | | **Total =** | **9.5** | |

[a] Values given are for total hydrocarbons (THC) referenced to heptane (molecular weight =100) after addition of dilution air.

[b] ppmv = parts per million by volume, as determined by the analytical laboratory.

[c] µg/L = micrograms per liter, as determined by the analytical laboratory.

**PARSONS**

**Parsons Engineering Science, Inc.**
1700 Broadway, Suite 900 • Denver, Colorado 80290 • (303) 831-8100 • Fax: (303) 831-8208

August 12, 1998

Mr. Jim Gonzales
AFCEE/ERT
3207 North Road, Building 532
Brooks AFB, Texas 78235-5363

RE: Air Force Contract No. F41624-94-D-8136, Order 02803
Air Conformity Determination of Flameless Thermal Oxidation and Internal Combustion Engine for VOC Off-Gas Abatement
Analytical Data Report No. 3, Source Area Reduction System, Former Lowry Air Force Base, Colorado CDRL A007A

Dear Mr. Gonzales:

Please find enclosed two copies of Tables 1, 2, and 3, which constitute Analytical Data Report No. 3 prepared by Parsons Engineering Science, Inc. (Parsons ES) for the vapor samples collected on July 21, 1998, during the demonstration of the flameless thermal oxidation (FTO) treatment unit at the Source Area Reduction System (SARS), former Lowry Air Force Base, Colorado. The FTO unit began treating contaminated soil vapors at 0800 hours on May 20, 1998. The volatile organic compound (VOC) destruction efficiency of the FTO Unit, calculated using data collected on July 21, 1998 exceeded 99.99 percent for all targeted compounds with the exception of tetrachloroethene (PCE) and 99.99 percent for total hydrocarbons (THC). The FTO unit continues to treat greater than 75-percent of the total SARS flow. This data report is being sent within 3 working days of receipt of the analytical laboratory results report.

Acetone was the only unexpected VOC detected in the effluent sample on July 21, 1998. The results shown on Table 1 indicate that this may be a result of acetone being present in the influent sample, but at a concentration less than the laboratory reporting limit for the influent sample [< 150 points per billion by volume (ppbv)]. The detected concentration in the effluent sample was 23 ppbv. However, if acetone is a site related compound it should be removed by the FTO treatment unit. Air Toxics, the analytical laboratory, does not believe that acetone is a laboratory related contaminant.

This sampling event also included an equipment blank sample of the stainless steel tubing used to collect effluent samples. The equipment blank sample was collected after the stainless steel tube was purged for approximately 3 to 4 minutes. Methylene chloride, PCE, and trichlororethene (TCE) were detected in the equipment blank sample at concentrations of 6.3, 11, and 6 ppbv, respectively. These results indicate that the stainless steel tubing may be contaminated. Therefore, this tubing will be replaced before the next sampling event and another equipment blank sample will be collected using the new tubing. Because PCE was detected in the equipment blank, the actual destruction efficiency of this compound may be exceed 99.99 percent.

The July 1998 data represent the following FTO treatment unit operating conditions:

- The week of July 6, 1998, Parsons ES intended to collect influent and effluent samples from the FTO unit, however, the Source Area Reduction System (SARS) was shut down, therefore sampling was delayed.

- On July 7, 1998, Mr. Tom Dragoo (Parsons ES Denver) contacted Mr. Pete Shingledecker (Versar) to determine when the SARS would be restarted so that influent and effluent sampling of the FTO unit could be performed. Mr. Shingledecker said the SARS would be restarted on July 8th.

- On July 8, 1998, Mr. Dragoo traveled to Lowry AFB to perform maintenance activities on the FTO unit and collect influent and effluent samples. The SARS was not operating, therefore, Mr. Dragoo did not collect influent or effluent samples. Mr. Dragoo drained the moisture separator (after 15 days of operation oil/water accumulation = 1 to 2 gallons oil and 10 to 11 gallons water). Mr. Dragoo installed a second moisture separator adjacent to the existing moisture separator and connected the two with a half-inch gravity feed hose. Mr. Dragoo left the site at approximately 1600 hours and the FTO unit was operating. On this date at 1652 hours, the FTO unit shut down due to a power outage. Advanced Security Technologies notified Parsons ES of the shut down. Electrical work is being performed as part of Base redevelopment and the power is being shut down occasionally to perform the electrical work.

- On July 8, 1998, Parsons ES distributed ADR No. 2 for the vapor samples collected on June 18, 1998, from the FTO unit. The data report was distributed within 7 working days of receipt of the analytical laboratory results.

- On July 9, 1998, Mr. Dragoo contacted Mr. Shingledecker to determine when the SARS would be restarted. Mr. Shingledecker said that it would be restarted on July 13th.

- On July 10, 1998, Mr. Guest transmitted an e-mail message to Mr. Gonzales, Mr. Bruce Kroehl (Base POC), and Mr. John Miller (AFCEE/ERB) informing them of the operational status of the FTO unit and that Parsons ES will restart the unit on July 13th.

- On July 13, 1998, Mr. Dragoo traveled to Lowry AFB to restart the FTO unit. The SARS was not operational therefore the FTO unit was started and left operating on 100-percent propane. The FTO unit was operating at 1715 hours.

- On July 14, 1998, Mr. Guest transmitted an e-mail message to Mr. Gonzales, Mr. Kroehl, and Mr. Miller informing them of the operational status of the FTO unit.

- On July 15, 1998, the FTO unit shut down due to electrical work being performed at Lowry AFB.

- On July 17, 1998, Versar restarted the SARS.

- On July 20, 1998, Mr. Tom Dragoo was unable to start the FTO unit because he was ill.

- On July 21, 1998, Mr. Dragoo traveled to Lowry AFB to restart the FTO unit. The unit was restarted, placed in the run mode at 1345 hours, and was treating vapors from the SARS at 1355 hours. At 1530 hours, Mr. Dragoo collected influent and effluent samples from the FTO unit, and equipment blank samples. At the time of sample collection, the FTO unit was treating vapors from the SARS at a flow rate of 105 cubic feet per minute (cfm) with 75-percent coming from the SARS and approximately 25-percent coming from ambient. The samples were sent to Air Toxics, Ltd. in Folsom, California for analysis by US Environmental Protection Agency (EPA) Method TO-14.

  Mr. Dragoo also replaced the influent vapor line to the FTO unit with chlorinated polyvinyl chloride (CPVC). Due to the high temperatures the polyvinyl chloride (PVC) pipe was deteriorating.

- On July 22, 1998, Mr. Guest transmitted an e-mail message to Mr. Gonzales, Mr. Kroehl, and Mr. Miller informing them of the operational status of the FTO unit.

- On July 24, 1998, at approximately 1920 hours, Advanced Security Technologies left a message for Ms. Judy Blakemore informing her that the FTO unit was shut down. Ms. Blakemore did not receive the message until the morning of July 27th.

- On July 27, 1998, Ms. Blakemore checked the FTO unit and determined that the cause of the shut down was due to a power outage. Ms. Blakemore did not have time in her schedule to restart the unit on this date. Mr. Guest transmitted an e-mail message to Mr. Gonzales, Mr. Kroehl, and Mr. Miller informing them of the operational status of the FTO unit.

- On July 28, 1998, Ms. Blakemore traveled to Lowry AFB to restart the FTO unit. The unit was restarted, placed in the run mode at 1427 hours, and was treating vapors from the SARS at 1501 hours.

- On July 29, 1998, Mr. Guest transmitted an e-mail message to Mr. Gonzales, Mr. Kroehl, and Mr. Miller informing them of the operational status of the FTO unit.

- On July 30, 1998, at 0100 hours the FTO unit shut down due to a brief interruption in power. Advanced Security Technologies notified Parsons ES at 0130 hours that the unit shut down. Ms. Blakemore informed Mr. Guest that power was out at the Base on July 30th from approximately 5:15 p.m. to 6:30 p.m. due to severe thunderstorms, and that more storms are expected today and over the weekend, therefore Ms. Blakemore will restart the unit Monday, August 3rd.

- On July 31, 1998, Mr. Guest left a voice mail message for Mr. Shingledecker regarding operation of the SARS and the FTO unit.

- On July 31, 1998, Mr. Guest transmitted an e-mail message to Mr. Gonzales, Mr. Kroehl, and Mr. Miller informing them of the operational status of the FTO unit. In the message, Mr. Guest also mentioned that he had left a message for Mr. Shingledecker to discuss operation of the FTO unit. Several weeks ago, Mr. Shingledecker said that in

mid July Versar was going to measure VOC concentrations in individual wells to determine which wells had the highest concentrations. At some point, it may be helpful to focus vapor extraction from the highest concentration wells to take advantage of the FTO unit's ability to treat high concentration vapor streams. The message also stated that in order for Parsons ES to complete the Site-Specific Evaluation Report (SSER) and Comprehensive Technical Report by November 30, 1998 (the delivery order end date), the official FTO demonstration period will end on August 30th. Data collected through August will be included in the SSER and if data are collected after August 30th they will not be included in the report.

**Operational Efficiency**

The FTO unit has a cumulative operational efficiency of 62-percent from start-up. All of the down-time has been associated with problems external to the FTO unit (see Table 2).

Per Contracts Data Requirements List (CDRL) A007A, one reproducible copy of the enclosed data tables has been provided to AFCEE/MSR on a 3.5-inch diskette in IBM-compatible format. If you have additional questions or comments please call me at (303) 764-1919, or Mr. Steve Archabal at (602) 852-9110.

Sincerely,

PARSONS ENGINEERING SCIENCE, INC.

Peter R. Guest

Peter R. Guest, P.E.
Project Manager

Enclosures

cc: Mr. Mike Deaton, HSC/PKVAB (LOT only)
Mr. Jane Keller, AFCEE/MSR (LOT and diskette only)
Mr. Bill Jacobs, Booz•Allen & Hamilton
Mr. Mark Lucas, Waste Policy Institute
Mr. John Miller, AFCEE/ERB
Mr. Bruce Kroehl, AFBCA - Lowry
Mr. Mike Galvin, Versar
Mr. Bill Gallant, Versar
Mr. Steve Archabal, Parsons ES Phoenix
Mr. Chris Gable, Thermatrix, Inc.
Mr. Jack Sullivan, Parsons ES Oklahoma

# TABLE 1
## DETECTED ANALYTES IN EXTRACTED VAPOR STREAM SAMPLES
## JUNE 1998
### FLAMELESS THERMAL OXIDATION DEMONSTRATION
### SOURCE AREA REDUCTION SYSTEM
### FORMER LOWRY AIR FORCE BASE, COLORADO

| | Detected Concentration (ppbv)[a] | | | | | | | | | |
|---|---|---|---|---|---|---|---|---|---|---|
| Analyte | Post Dilution Influent Sample SARS-IOX2-105 5/22/98 | Effluent Sample SARS-EOX2-105 5/22/98 | Destruction Efficiency (percent) | Post Dilution Influent Sample SARS-IOX3-105 6/18/98 | Effluent Sample SARS-EOX3-105 6/18/98 | Destruction Efficiency (percent) | Post Dilution Influent Sample SARS-IOX4-105 7/21/98 | Effluent Sample SARS-EOX4-105 7/21/98 | Destruction Efficiency (percent) | Effluent Sample Equipment Blank EB-1 7/21/98 |
| vinyl chloride | 100 | <5.3[b] | >99.99 | 96 | <5.1 | >99.99 | 100 | <5.4 | >99.99 | <5.1 |
| 1,1-dichlorothene | 200 | <5.3 | >99.99 | 150 | <5.1 | >99.99 | 260 | <5.4 | >99.99 | <5.1 |
| methylene chloride | 100 | <5.3 | >99.99 | 66 | <5.1 | >99.99 | 100 | <5.4 | >99.99 | 6.3 |
| 1,1-dichlorothane | <42 | <5.3 | NA[c] | <25 | <5.1 | NA | 47 | <5.4 | >99.99 | <5.1 |
| cis-1,2-dichloroethene | 680 | <5.3 | >99.99 | 480 | <5.1 | >99.99 | 1500 | <5.4 | >99.99 | <5.1 |
| 1,1,1-trichloroethane | 650 | <5.3 | >99.99 | 650 | <5.1 | >99.99 | 930 | <5.4 | >99.99 | <5.1 |
| tetrachloroethene | 180 | <5.3 | >99.99 | 140 | <5.1 | >99.99 | 280 | 10 | 96.43 | 11 |
| toluene | <42 | <5.3 | NA | <25 | <5.1 | NA | <37 | <5.4 | NA | <5.1 |
| m,p-Xylene | <42 | <5.3 | NA | <25 | <5.1 | NA | <37 | <5.4 | NA | <5.1 |
| o-Xylene | <42 | <5.3 | NA | <25 | <5.1 | NA | <37 | <5.4 | NA | <5.1 |
| 1,2,4-trimethylbenzene | <42 | <5.3 | NA | <25 | <5.1 | NA | <37 | <5.4 | NA | <5.1 |
| Acetone | <170 | <21 | NA | <99 | 23 | NA | <150 | 23 | NA | <20 |
| 2-butanone | <170 | <21 | NA | <99 | <20 | NA | <150 | <22 | NA | <20 |
| Tetrahydrofuran | <170 | <21 | NA | <99 | <20 | NA | <150 | <22 | NA | <20 |
| cyclohexane | <170 | <21 | NA | <99 | <20 | NA | <150 | <22 | NA | <20 |
| 1,4-dioxane | <170 | <21 | NA | <99 | <20 | NA | <150 | <22 | NA | <20 |
| trichloroethene | 6900 | 9.8 | 99.86 | 6200 | <20 | >99.99 | 11000 | <5.4 | >99.99 | 6 |
| THC[d] | 8900 | <53 | >99.99 | 9400 | 96 | 98.98 | 8500 | <54 | >99.99 | <51 |

[a] ppbv = parts per billion by volume, as determined by Air Toxics, Folsom, CA using USEPA Method TO-14 GC/MS Full Scan. See Table 2 for field measurements and system operating conditions at the time of sampling.

[b] < = Compound not detected, value shown represents the reporting limit.

[c] NA = Not applicable.

[d] THC = Total hydrocarbons referenced to heptane (molecular weight = 100).

# TABLE 2
## FIELD MEASUREMENTS AND SYSTEM OPERATING CONDITIONS
### FLAMELESS THERMAL OXIDATION DEMONSTRATION
### SOURCE AREA REDUCTION SYSTEM
### FORMER LOWRY AIR FORCE BASE, COLORADO

| Date[a] | Time | Possible Run Time (hours) | Cumulative Possible Run Time (hours) | Run Time Meter (hours) | Run Time Since Last Event (hours) | Cumulative Run Time[b] (hours) | Cumulative Down Time Due To Unit Problems (hours) | Cummulative Down Time Due To External Problems (hours) | Isolated Down Time (hours) | Flow Rate Into Oxidizer (scfm) | Fume Portion of Flow (percent) | Ambient Portion of Flow (percent) | Comments |
|---|---|---|---|---|---|---|---|---|---|---|---|---|---|
| 5/20/98 | 0800 | 0 | 0 | NR[d] | 0 | 0.0 | 0.0 | 0.0 | | 105 | 75 | 25 | Collected SARS-IKO1-80, SARS-IOX1-105, and SARS-EOX1-105 |
| 5/21/98 | 1017 | 26.2 | 26.2 | 5725.0 | 26.2 | 26.2 | 0.0 | 0.0 | | | | | |
| 5/22/98 | 1030 | 24.2 | 50.4 | NR | 24.2 | 50.4 | 0.0 | 0.0 | | 105 | 75 | 25 | Collected SARS-IOX2-105 and SARS-EOX2-105 |
| 5/26/98 | 0200 | 87.5 | 137.9 | 5841.8 | 87.5 | 137.9 | 0.0 | 0.0 | | | | | System down due to power outage |
| 5/28/98 | 0910 | 55.2 | 193.1 | 5841.8 | 0.0 | 137.9 | 0.0 | 55.2 | 55.2 | 105 | 75 | 25 | System restart |
| 6/3/98 | 1622 | 151.3 | 344.4 | 5993.1 | 151.3 | 289.2 | 0.0 | 55.2 | | | | | System down due to SARS shut-down resulting in low flow |
| 6/4/98 | 0712 | 14.8 | 359.2 | 5993.1 | 0.0 | 289.2 | 0.0 | 69.9 | 14.8 | 105 | 75 | 25 | System restart |
| 6/4/98 | 2242 | 15.5 | 374.7 | 6008.6 | 15.5 | 304.7 | 0.0 | 69.9 | | | | | System down due to high water level in moisture seperator |
| 6/10/98 | 0655 | 128.2 | 502.9 | 6008.6 | 0.0 | 304.7 | 0.0 | 198.1 | 128.2 | 105 | 75 | 25 | System restart |
| 6/18/98 | 0900 | 186.7 | 689.6 | 6195.3 | 186.7 | 491.4 | 0.0 | 198.1 | | 105 | 75 | 25 | Collected SARS-IOX3-105 and SARS-EOX3-105 |
| 6/21/98 | 1813 | 275.3 | 778.2 | 6283.9 | 275.3 | 580.0 | 0.0 | 198.1 | | | | | System down due to high water level in moisture seperator |
| 6/23/98 | 1000 | 39.8 | 818 | 6283.9 | 0.0 | 580.0 | 0.0 | 238.0 | 39.8 | 105 | 75 | 25 | System restart |
| 7/8/98 | 1700 | 367.1 | 1185.1 | 6651.0 | 367.1 | 947.1 | 0.0 | 238.0 | | | | | System down due to power outage |
| 7/13/98 | 1225 | 115.5 | 1300.6 | 6651.0 | 0.0 | 947.1 | 0.0 | 353.5 | 115.5 | 105 | 75 | 25 | System restart |
| 7/15/98 | 1025 | 46 | 1346.6 | 6697.0 | 46.0 | 993.1 | 0.0 | 353.5 | | | | | System down due to power outage |
| 7/21/98 | 0900 | 142.6 | 1489.2 | 6697.0 | 0.0 | 993.1 | 0.0 | 496.1 | 142.6 | 105 | 75 | 25 | System restart, Collected SARS-IOX4-105 and SARS-EOX4-105 and EB-1 |
| 7/24/98 | 1930 | 82.5 | 1571.7 | 6779.5 | 82.5 | 1075.6 | 0.0 | 496.1 | | | | | System down due to power outage |
| 7/28/98 | 0800 | 84.5 | 1656.2 | 6779.5 | 0.0 | 1075.6 | 0.0 | 580.6 | 84.5 | 105 | 75 | 25 | System restart |
| 7/30/98 | 0110 | 41.2 | 1697.4 | 6820.7 | 41.2 | 1116.8 | 0.0 | 580.6 | | | | | System down due to power outage |
| 8/3/98 | 0805 | 102.9 | 1800.3 | 6820.7 | 0.0 | 1116.8 | 0.0 | 683.5 | 102.9 | 105 | 75 | 25 | System restart |
| 8/7/98 | 1017 | 98.2 | 1898.5 | 6918.9 | 98.2 | 1215.0 | 0.0 | 683.5 | | | | | System down due to power outage |
| 8/10/98 | 0935 | 71.3 | 1969.8 | 6918.9 | 0.0 | 1215.0 | 0.0 | 754.8 | 71.3 | 105 | 80 | 20 | System restart, Collected SARS-IOX5-105 and SARS-EOX5-105 |

**Cumulative Operational Efficiency = 62%**
**Unit Problems Operational Efficiency = 100%**
**External Problems Operational Efficiency = 62%**

[a] Vapors from IRAEW-01 through IRAEW-15 are being treated.
[b] Cumulative run time includes time during start-up (i.e., purge, preheat, cool bed, and profile modes).
[d] NR = not recorded.

# TABLE 3
## HYDROCARBON MASS REMOVAL AND EMISSIONS
### FLAMELESS THERMAL OXIDATION DEMONSTRATION
### SOURCE AREA REDUCTION SYSTEM
### FORMER LOWRY AIR FORCE BASE, COLORADO

| Date Sampled | Extraction Wells | Days of Operation | Influent THC[a] Concentration (ppmv)[b] | Influent THC[a] Concentration (μg/L)[c] | Flow Rate (scfm) | Effluent THC Concentration (ppmv) | Effluent THC Concentration (μg/L) | Pounds of THC Remove | Total Daily THC Emissions[b] (pounds/day) |
|---|---|---|---|---|---|---|---|---|---|
| 5/20/98 | IRAEW 01-15 | 1.0 | 9.5 | 39 | 105 | 5.4 | 22 | 0.37 | 0.2 |
| 5/22/98 | IRAEW 01-15 | 2.0 | 8.9 | 37 | 105 | <0.05 | < 0.22 | 0.70 | 0.0021 |
| 6/18/98 | IRAEW 01-15 | 18.4 | 9.0 | 37 | 105 | 0.10 | < 0.23 | 6.48 | 0.0022 |
| 7/21/98 | IRAEW 01-16 | 21.0 | 8.5 | 35 | 105 | <0.05 | < 0.22 | 6.99 | 0.0021 |
| | Total = | 42.4 | | | | | Total = | 14.5 | |

[a] Values given are for total hydrocarbons (THC) referenced to heptane (molecular weight =100) after addition of dilution air.

[b] ppmv = parts per million by volume, as determined by the analytical laboratory.

[c] μg/L = micrograms per liter, as determined by the analytical laboratory.

**PARSONS**

**Parsons Engineering Science, Inc.**
1700 Broadway, Suite 900 • Denver, Colorado 80290 • (303) 831-8100 • Fax: (303) 831-8208

September 1, 1998

Mr. Jim Gonzales
AFCEE/ERT
3207 North Road, Building 532
Brooks AFB, Texas 78235-5363

RE: Air Force Contract No. F41624-94-D-8136, Order 02803
Air Conformity Determination of Flameless Thermal Oxidation and Internal Combustion Engine for VOC Off-Gas Abatement
Analytical Data Report No. 4, Source Area Reduction System, Former Lowry Air Force Base, Colorado CDRL A007A

Dear Mr. Gonzales:

Please find enclosed two copies of Tables 1, 2, and 3, which constitute Analytical Data Report No. 4 prepared by Parsons Engineering Science, Inc. (Parsons ES) for the vapor samples collected on August 10, 1998, during the demonstration of the flameless thermal oxidation (FTO) treatment unit at the Source Area Reduction System (SARS), former Lowry Air Force Base, Colorado. The FTO unit began treating contaminated soil vapors at 0800 hours on May 20, 1998. The volatile organic compound (VOC) destruction efficiency of the FTO unit, calculated using data collected on August 10, 1998 exceeded 99.99 percent for all targeted compounds. The FTO unit is treating greater than 75-percent of the total SARS flow. There were no VOCs detected in the effluent sample collected on August 10, 1998. This data report is being sent within 5 working days of receipt of the analytical laboratory results report.

The following activities occurred in August 1998:

- On August 3, 1998, Ms. Judy Blakemore traveled to Lowry AFB to restart the FTO unit. The unit was restarted, placed in the run mode at 1344 hours, and was treating vapors from the SARS at 1540 hours. On July 30, 1998, at 0100 hours the FTO unit shut down due to an interruption in power.

- On August 4, 1998, Mr. Pete Guest contacted Mr. Pete Shingledecker (Versar) to discuss the operation of the Source Area Reduction System. Mr. Shingledecker said that Versar does not have plans to sample individual wells to determine the concentration of total volatile organic compounds (VOCs) or to isolate extraction from wells that may have the highest VOC concentration. Mr. Shingledecker said that due to an approximate 2-week downtime period, the water level is still 3 to 4 feet above the bedrock surface. Therefore, it is possible that the most contaminated soils may not have been exposed at this time.

- On August 4, 1998, Mr. Guest left a message for Mr. Gonzales informing him that the total VOC concentration being treated by the FTO unit is approximately 9,000 parts per billion by volume (ppbv), which is approximately two orders of magnitude lower than the concentration necessary for the FTO unit to be a cost effective treatment technology. Mr. Guest informed Mr. Gonzales of his discussion with Mr. Shingledecker and that it did not appear that the concentrations would increase during the remaining FTO demonstration period.

- On August 5, 1998, Mr. Guest discussed with Mr. Gonzales the status of FTO operations. Mr. Gonzales said that he would contact Mr. John Miller (AFCEE/ERB Lowry Team Chief) to discuss whether they want to continue to use the FTO unit at the SARS site after the FTO demonstration period concludes on August 31st. If they do not, Mr. Gonzales will begin searching for another location to transport the FTO unit to.

- On August 6, 1998, Mr. Gonzales discussed with Mr. Dan House (AFCEE/PK) and Mr. Bill Gallant (Versar) the future of the FTO unit at Lowry. Mr. Miller was not available, therefore Mr. Gonzales contacted Mr. House. Mr. Gonzales informed them that the FTO unit is not a cost effective treatment technology because the VOC concentrations are so low (approximately 9,000 ppbv). All parties agreed that there was not a cost-effective use for the FTO unit at Lowry, and that following August 31st the unit could be moved to another site. On this date, Mr. Gonzales contacted Mr. Guest and informed him of the conversation. Mr. Gonzales said that he would contact McClellan AFB, CA to inquire if they could use the FTO unit. Mr. Gonzales asked Mr. Guest to obtain a quote for transporting the FTO unit from Lowry AFB to McClellan AFB, CA (Sacramento). Mr. Guest contacted Gauger Heavy Haul, who has transported the FTO unit previously, and was quoted a price of $3,538. On this date, Mr. Gonzales contacted Mr. Kevin Wong (SM-ALC/EMR-McClellan AFB) and he is interested in the FTO unit. Mr. Wong requested a photograph. On this date, Mr. Guest e-mailed a photograph to Mr. Gonzales that he could e-mail to Mr. Wong.

- On August 7, 1998, at approximately 1017 hours the FTO unit shut down due a power outage at the Base. Advanced Security Technologies informed Parsons ES of the shut down. At 1045 hours Ms. Blakemore contacted the Lowry Redevelopment Authority (LRA) and was told that their power was out and they were told (assume by the electrical contractor-Sturgeon) that the power would be off for another 1 to 2 hours. Mr. Tom Dragoo (Parsons ES) was scheduled to collect influent and effluent samples from the unit on the afternoon of August 7th, however he will now restart the unit and collect samples on Monday, August 10th.

- On August 10, 1998, Mr. Guest transmitted an e-mail message to Mr. Gonzales, Mr. Bruce Kroehl (Base POC), and Mr. John Miller (AFCEE/ERB) informing them of the operational status of the FTO unit and that Parsons ES will restart the unit and collect samples on August 10th.

- On August 10, 1998, Mr. Kroehl responded to Mr. Guest's message and asked how are the power outages affecting the success of the demonstration and if Parsons ES will be able to collect sufficient data to evaluate the performance of the FTO unit. Mr. Guest responded that sufficient data should be collected, however the low concentrations are a concern. At the present influent concentrations (approximately 9,000 ppbv), it is not cost effective to operate the FTO unit. Mr. Guest said that he has discussed this with Versar and it does not appear that the concentrations will increase before the end of our demonstration period (August 31, 1998). Also, Versar does not foresee a need to keep the unit at Lowry because, as a result of the low concentrations, carbon is a cost efficient treatment technology. Mr. Gonzales is looking for a site to move the FTO unit to in September. Therefore, as of this time, we anticipate shutting down the FTO unit on August 31st and preparing it for demobilization to a new site. Transport to the new site is anticipated to occur in September 1998. Mr. Guest copied Mr. Gonzales and Mr. Miller on the e-mail message.

- On August 10, 1998, Mr. Dragoo traveled to Lowry AFB to restart the FTO unit. The unit was restarted, placed in the run mode at 1410 hours, and was treating vapors from the SARS at 1424 hours. At 1510 hours, Mr. Dragoo collected influent and effluent samples from the FTO unit. At the time of sample collection, the FTO unit was treating vapors from the SARS at a flow rate of 105 cubic feet per minute (cfm) with 85-percent coming from the SARS and approximately 15-percent coming from ambient. The samples were sent to Air Toxics, Ltd. in Folsom, California for analysis by US Environmental Protection Agency (EPA) Method TO-14.

- On August 10, 1998, the FTO unit shut down at approximately 5:30 p.m. due to a power outage at the Base. The power outage was caused by a severe electrical storm. The Lowry Redevelopment Authority also lost power during this storm. Advanced Security Technologies informed Parsons ES of the shut down.

- On August 11, 1998, Mr. Guest transmitted an e-mail message to Mr. Gonzales, Mr. Kroehl, and Mr. Miller informing them of the operational status of the FTO unit.

- On August 11, 1998, at the request of Mr. Gonzales, Parsons ES transmitted to Mr. Kevin Wong (SM-ALC/EMR, McClellan AFB), a copy of the final *Site-Specific Evaluation Report for the Evaluation of Thermatrix GS Series Flameless Thermal Oxidizer for Off-Gas Treatment of Soil Vapors With Volatile Organic Compounds at Site FT-002, Plattsburgh Air Force Base, New York.*

- On August 12, 1998, Ms. Blakemore traveled to Lowry AFB to restart the FTO unit. The unit was restarted, placed in the run mode at 1406 hours, and was treating vapors from the SARS at 1417 hours.

- On August 12, 1998, Parsons ES distributed ADR No. 3 for the vapor samples collected on July 21, 1998, from the FTO unit. The data report was distributed within 3 working days of receipt of the analytical laboratory results.

- On August 13, 1998, at approximately 1316 hours, the FTO unit shut down. Advanced Security Technologies informed Parsons ES of the shut down.

- On August 14, 1998, Ms. Blakemore traveled to Lowry AFB and determined the cause of shut down was low flow to the FTO unit. A SARS extraction well malfunctioned causing low flow to the SARS, and therefore low flow to the FTO unit.

- On August 14, 1998, Mr. Guest transmitted an e-mail message to Mr. Gonzales, Mr. Kroehl, and Mr. Miller informing them of the operational status of the FTO unit.

- On August 17, 1998, Ms. Blakemore traveled to Lowry AFB to start the FTO unit. The unit was placed in the "run" mode at 1427 hours and was treating vapors from the SARS at 1437 hours.

- On August 18, 1998, Mr. Guest transmitted an e-mail message to Mr. Gonzales, Mr. Kroehl, and Mr. Miller informing them of the operational status of the FTO unit. The message also informed them that Mr. Tom Dragoo will collect influent and effluent samples from the FTO unit on Thursday or Friday, August 20th or 21st.

- On August 19, 1998, at approximately 0420 hours, the FTO unit shut down. Advanced Security Technologies informed Parsons ES of the shut down.

- On August 19, 1998, Ms. Blakemore traveled to Lowry AFB and determined the cause of shut down was low flow to the FTO unit. Ms. Blakemore placed the unit in the "run" mode at 1425 hours and was treating vapors from the SARS at 1437 hours.

- On August 19, 1998, at approximately 2050 hours, the FTO unit shut down. Advanced Security Technologies informed Parsons ES of the shut down.

- On August 20, 1998, Ms. Blakemore traveled to Lowry AFB and based on a conversation with Mr. Pete Shingledecker (Versar) determined the cause of the shut down was a 1-hour power outage at the Base.

- On August 24, 1998, Mr. Dragoo restarted the FTO unit. The unit was placed in the "run" mode at 1200 hours and was treating vapors from the SARS at 1208 hours.

- On August 24, 1998, at approximately 1640 hours, the FTO unit shut down. Advanced Security Technologies informed Parsons ES of the shut down.

- On August 25, 1998, Ms. Blakemore traveled to Lowry AFB and determined the cause of shut down was low flow to the FTO unit.

- On August 26, 1998, Mr. Tom Dragoo traveled to Lowry AFB to determine the cause of the low flow to the FTO unit. Mr. Dragoo discussed the problem with Mr. Steve Archabal (Parsons ES Phoenix) and determined that condensate in the piping may be causing the low flow. Mr. Dragoo spent the morning breaking open the vapor line in various places on the FTO unit to find out if condensate was the cause for the last couple of shut downs. There was about 3 to 5 ml of fluid found in the 1/4-inch line that connects the flow meter. This restricted the flow through the flow meter and appears to have caused the low flow shut downs of the FTO unit. After reassembling the piping, Mr. Dragoo placed the unit into "run" mode at 2024 and let the FTO run over night without vapors from the SARS. The unit was not placed on vapors from the SARS so that we could evaluate if the FTO shut downs were caused due to the interaction with the SARS or do to a problem with the FTO unit (i.e., condensate in the piping).

- On August 27, 1998, Mr. Dragoo traveled to the site to inspect the operation FTO unit. He arrived at the site at 0830 hours and the unit was operating and all parameters were stable. At 0837, the FTO unit began treating vapors from the SARS. Mr. Dragoo collected the sixth (6) round of samples including a second equipment blank on the new sample tubing.

- On August 27, 1998, Mr. Guest transmitted an e-mail message to Mr. Gonzales, Mr. Kroehl, and Mr. Miller informing them of the operational status of the FTO unit. The message also stated that Parsons ES intends to shut down the unit on Monday, August 31st to prepare it for demobilization and prior to shut down, another round of influent and effluent samples will be collected.

**Operational Efficiency**

The FTO unit has a cumulative operational efficiency of 57-percent from start-up. The majority of the downtime has been associated with problems external to the FTO unit (see Table 2). During the weeks of August 17 and 24, 1998, there was a problem with condensate in the ¼-inch line that connecting the flow meter. This caused two shut downs of the FTO unit due to low flow. This problem was resolved on August 26th, as described above.

Per Contracts Data Requirements List (CDRL) A007A, one reproducible copy of the enclosed data tables has been provided to AFCEE/MSR on a 3.5-inch diskette in IBM-compatible format. If you have additional questions or comments please call me at (303) 764-1919, or Mr. Steve Archabal at (602) 852-9110.

Sincerely,

PARSONS ENGINEERING SCIENCE, INC.

Peter R. Guest.

Peter R. Guest, P.E.
Project Manager

Enclosures

cc: Mr. Mike Deaton, HSC/PKVAB (LOT only)
Mr. Jane Keller, AFCEE/MSR (LOT and diskette only)
Mr. Bill Jacobs, Booz•Allen & Hamilton
Mr. Mark Lucas, Waste Policy Institute
Mr. John Miller, AFCEE/ERB
Mr. Bruce Kroehl, AFBCA - Lowry
Mr. Mike Galvin, Versar
Mr. Bill Gallant, Versar
Mr. Steve Archabal, Parsons ES Phoenix
Mr. Chris Gable, Thermatrix, Inc.
Mr. Jack Sullivan, Parsons ES Oklahoma

# TABLE 1
## DETECTED ANALYTES IN EXTRACTED VAPOR STREAM SAMPLES
## AUGUST 1998
### FLAMELESS THERMAL OXIDATION DEMONSTRATION
### SOURCE AREA REDUCTION SYSTEM
### FORMER LOWRY AIR FORCE BASE, COLORADO

| | Detected Concentration (ppbv)[a] | | | | | | | | | |
|---|---|---|---|---|---|---|---|---|---|---|
| Analyte | Post Dilution Influent Sample SARS-IOX3-105 6/18/98 | Effluent Sample SARS-EOX3-105 6/18/98 | Destruction Efficiency (percent) | Post Dilution Influent Sample SARS-IOX4-105 7/21/98 | Effluent Sample SARS-EOX4-105 7/21/98 | Destruction Efficiency (percent) | Effluent Sample Equipment Blank EB-1 7/21/98 | Post Dilution Influent Sample SARS-IOX5-105 8/10/98 | Effluent Sample SARS-EOX5-105 8/10/98 | Destruction Efficiency (percent) |
| vinyl chloride | 96 | <5.1 | >99.99 | 100 | <5.4 | >99.99 | <5.1 | 71 | <5.3 | >99.99 |
| 1,1-dichlorothene | 150 | <5.1 | >99.99 | 260 | <5.4 | >99.99 | <5.1 | 130 | <5.3 | >99.99 |
| methylene chloride | 66 | <5.1 | >99.99 | 100 | <5.4 | >99.99 | 6.3 | 120 | <5.3 | >99.99 |
| 1,1-dichlorothane | <25 | <5.1 | NA | 47 | <5.4 | >99.99 | <5.1 | <25 | <5.3 | NA |
| cis-1,2-dichloroethene | 480 | <5.1 | >99.99 | 1500 | <5.4 | >99.99 | <5.1 | 760 | <5.3 | >99.99 |
| 1,1,1-trichloroethane | 650 | <5.1 | >99.99 | 930 | <5.4 | >99.99 | <5.1 | 460 | <5.3 | >99.99 |
| tetrachloroethene | 140 | <5.1 | >99.99 | 280 | 10 | 96.43 | 11 | 180 | <5.3 | >99.99 |
| toluene | <25 | <5.1 | NA | <37 | <5.4 | NA | <5.1 | <25 | <5.3 | NA |
| m,p-Xylene | <25 | <5.1 | NA | <37 | <5.4 | NA | <5.1 | <25 | <5.3 | NA |
| o-Xylene | <25 | <5.1 | NA | <37 | <5.4 | NA | <5.1 | <25 | <5.3 | NA |
| 1,2,4-trimethylbenzene | <25 | <5.1 | NA | <37 | <5.4 | NA | <5.1 | <25 | <5.3 | NA |
| Acetone | <99 | 23 | NA | <150 | 23 | NA | <20 | <100 | <21 | NA |
| 2-butanone | <99 | <20 | NA | <150 | <22 | NA | <20 | <100 | <21 | NA |
| Tetrahydrofuran | <99 | <20 | NA | <150 | <22 | NA | <20 | <100 | <21 | NA |
| cyclohexane | <99 | <20 | NA | <150 | <22 | NA | <20 | <100 | <21 | NA |
| 1,4-dioxane | <99 | <20 | NA | <150 | <22 | NA | <20 | <100 | <21 | NA |
| trichloroethene | 6200 | <20 | >99.99 | 11000 | <5.4 | >99.99 | 6 | 5100 | <5.3 | >99.99 |
| THC[d] | 9400 | 96 | 98.98 | 8500 | <54 | >99.99 | <51 | 3000 | <53 | >99.99 |

[a] ppbv = parts per billion by volume, as determined by Air Toxics, Folsom, CA using USEPA Method TO-14 GC/MS Full Scan. See Table 2 for field measurements and system operating conditions at the time of sampling.

[b] < = Compound not detected, value shown represents the reporting limit.

[c] NA = Not applicable.

[d] THC = Total hydrocarbons referenced to heptane (molecular weight = 100).

# TABLE 2
## FIELD MEASUREMENTS AND SYSTEM OPERATING CONDITIONS
### FLAMELESS THERMAL OXIDATION DEMONSTRATION
### SOURCE AREA REDUCTION SYSTEM
### FORMER LOWRY AIR FORCE BASE, COLORADO

| Date[a] | Time | Possible Run Time (hours) | Cumulativ Possible Run Time (hours) | Run Time Meter (hours) | Run Time Since Last Event (hours) | Cumulativ Run Time[b] (hours) | Cumulative Down Time Due To Unit Problems (hours) | Cummulative Down Time Due To External Problems (hours) | Isolated Down Time (hours) | Flow Rate Into Oxidizer (scfm) | Fume Portion of Flow (percent) | Ambient Portion of Flow (percent) | Comments |
|---|---|---|---|---|---|---|---|---|---|---|---|---|---|
| 5/20/98 | 0800 | 0 | 0 | NR[c] | 0 | 0.0 | 0.0 | 0.0 | | 105 | 75 | 25 | Collected SARS-IKO1-80, SARS-IOX1-105, and SARS-EOX1-105 |
| 5/21/98 | 1017 | 26.2 | 26.2 | 5725.0 | 26.2 | 26.2 | 0.0 | 0.0 | | | | | |
| 5/22/98 | 1030 | 24.2 | 50.4 | NR | 24.2 | 50.4 | 0.0 | 0.0 | | 105 | 75 | 25 | Collected SARS-IOX2-105 and SARS-EOX2-105 |
| 5/26/98 | 0200 | 87.5 | 137.9 | 5841.8 | 87.5 | 137.9 | 0.0 | 0.0 | | | | | System down due to power outage |
| 5/28/98 | 0910 | 55.2 | 193.1 | 5841.8 | 0.0 | 137.9 | 0.0 | 55.2 | 55.2 | 105 | 75 | 25 | System restart |
| 6/3/98 | 1622 | 151.3 | 344.4 | 5993.1 | 151.3 | 289.2 | 0.0 | 55.2 | | | | | System down due to SARS shut-down resulting in low flow |
| 6/4/98 | 0712 | 14.8 | 359.2 | 5993.1 | 0.0 | 289.2 | 0.0 | 69.9 | 14.8 | 105 | 75 | 25 | System restart |
| 6/4/98 | 2242 | 15.5 | 374.7 | 6008.6 | 15.5 | 304.7 | 0.0 | 69.9 | | | | | System down due to high water level in moisture seperator |
| 6/10/98 | 0655 | 128.2 | 502.9 | 6008.6 | 0.0 | 304.7 | 0.0 | 198.1 | 128.2 | 105 | 75 | 25 | System restart |
| 6/18/98 | 0900 | 186.7 | 689.6 | 6195.3 | 186.7 | 491.4 | 0.0 | 198.1 | | 105 | 75 | 25 | Collected SARS-IOX3-105 and SARS-EOX3-105 |
| 6/21/98 | 1813 | 275.3 | 778.2 | 6283.9 | 275.3 | 580.0 | 0.0 | 198.1 | | | | | System down due to high water level in moisture seperator |
| 6/23/98 | 1000 | 39.8 | 818 | 6283.9 | 0.0 | 580.0 | 0.0 | 238.0 | 39.8 | 105 | 75 | 25 | System restart |
| 7/8/98 | 1700 | 367.1 | 1185.1 | 6651.0 | 367.1 | 947.1 | 0.0 | 238.0 | | | | | System down due to power outage |
| 7/13/98 | 1225 | 115.5 | 1300.6 | 6651.0 | 0.0 | 947.1 | 0.0 | 353.5 | 115.5 | 105 | 75 | 25 | System restart |
| 7/15/98 | 1025 | 46 | 1346.6 | 6697.0 | 46.0 | 993.1 | 0.0 | 353.5 | | | | | System down due to power outage |
| 7/21/98 | 0900 | 142.6 | 1489.2 | 6697.0 | 0.0 | 993.1 | 0.0 | 496.1 | 142.6 | 105 | 75 | 25 | System restart, Collected SARS-IOX4-105 and SARS-EOX4-105 and EB-1 |
| 7/24/98 | 1930 | 82.5 | 1571.7 | 6779.5 | 82.5 | 1075.6 | 0.0 | 496.1 | | | | | System down due to power outage |
| 7/28/98 | 0800 | 84.5 | 1656.2 | 6779.5 | 0.0 | 1075.6 | 0.0 | 580.6 | 84.5 | 105 | 75 | 25 | System restart |
| 7/30/98 | 0110 | 41.2 | 1697.4 | 6820.7 | 41.2 | 1116.8 | 0.0 | 580.6 | | | | | System down due to power outage |
| 8/3/98 | 0805 | 102.9 | 1800.3 | 6820.7 | 0.0 | 1116.8 | 0.0 | 683.5 | 102.9 | 105 | 75 | 25 | System restart |
| 8/7/98 | 1017 | 98.2 | 1898.5 | 6918.9 | 98.2 | 1215.0 | 0.0 | 683.5 | | | | | System down due to power outage |
| 8/10/98 | 0935 | 71.3 | 1969.8 | 6918.9 | 0.0 | 1215.0 | 0.0 | 754.8 | 71.3 | 105 | 80 | 20 | System restart, Collected SARS-IOX5-105 and SARS-EOX5-105 |
| 8/10/98 | 1736 | 8.1 | 1977.9 | 6927.0 | 8.1 | 1223.1 | 0.0 | 754.8 | | | | | System down due to power outage |
| 8/12/98 | 0910 | 39.5 | 2017.4 | 6927.0 | 0.0 | 1223.1 | 0.0 | 794.3 | 39.5 | 105 | 75 | 25 | System restart |
| 8/13/98 | 1316 | 28.1 | 2045.5 | 6955.1 | 28.1 | 1251.2 | 0.0 | 794.3 | | | | | System down due to power outage |
| 8/17/98 | 0914 | 68.0 | 2113.5 | 6955.1 | 0.0 | 1251.2 | 0.0 | 862.3 | 68.0 | 105 | 75 | 25 | System restart |
| 8/19/98 | 0420 | 43.1 | 2156.6 | 6998.2 | 43.1 | 1294.3 | 0.0 | 862.3 | | | | | System down due to low flow FALL-206 |
| 8/19/98 | 0938 | 5.3 | 2161.9 | 6998.2 | 0.0 | 1294.3 | 5.3 | 862.3 | 5.3 | 105 | 75 | 25 | System restart |
| 8/19/98 | 2050 | 11.2 | 2173.1 | 7009.4[d] | 11.2 | 1305.5 | 5.3 | 862.3 | | | | | System down due to power outage |
| 8/24/98 | 0727 | 106.6 | 2279.7 | 0.0 | 0.0 | 1305.5 | 5.3 | 968.9 | 106.6 | 105 | 75 | 25 | System restart |
| 8/24/98 | 1640 | 9.2 | 2288.9 | 9.2 | 9.2 | 1314.7 | 5.3 | 968.9 | | | | | System down due to low flow FALL-206 |
| 8/26/98 | 1619 | 47.7 | 2336.6 | 9.2 | 0.0 | 1314.7 | 53.0 | 968.9 | 47.7 | 105 | 75 | 25 | System restart |
| 8/27/98 | 1006 | 17.8 | 2354.4 | 27.1 | 17.8 | 1332.5 | 53.0 | 968.9 | | | | | Collected SARS-IOX6-105 and SARS-EOX6-105 and EB-2 |

**Cumulative Operational Efficiency = 57%**
**Unit Problems Operational Efficiency = 98%**
**External Problems Operational Efficiency = 59%**

[a] Vapors from IRAEW-01 through IRAEW-15 are being treated.
[b] Cumulative run time includes time during start-up (i.e., purge, preheat, cool bed, and profile modes).
[c] NR = not recorded.
[d] This hour meter reading corresponds with Advanced Security Technologies call to Parsons ES. The hour meter was broken.

# TABLE 3
## HYDROCARBON MASS REMOVAL AND EMISSIONS
### FLAMELESS THERMAL OXIDATION DEMONSTRATION
### SOURCE AREA REDUCTION SYSTEM
### FORMER LOWRY AIR FORCE BASE, COLORADO

| Date Sampled | Extraction Wells | Days of Operation | Influent THC[a] Concentration (ppmv)[b] | Influent THC[a] Concentration (µg/L)[c] | Flow Rate (scfm) | Effluent THC Concentration (ppmv) | Effluent THC Concentration (µg/L) | Pounds of THC Remove | Total Daily THC Emissions[b] (pounds/day) |
|---|---|---|---|---|---|---|---|---|---|
| 5/20/98 | IRAEW 01-15 | 1.0 | 9.5 | 39 | 105 | 5.4 | 22 | 0.37 | 0.2 |
| 5/22/98 | IRAEW 01-15 | 2.0 | 8.9 | 37 | 105 | <0.05 | < 0.22 | 0.70 | 0.0021 |
| 6/18/98 | IRAEW 01-15 | 18.4 | 9.0 | 37 | 105 | 0.10 | < 0.23 | 6.48 | 0.0022 |
| 7/21/98 | IRAEW 01-15 | 21.0 | 8.5 | 35 | 105 | <0.05 | < 0.22 | 6.99 | 0.0021 |
| 8/10/98 | IRAEW 01-15 | 10.0 | 3.0 | 12 | 105 | <0.05 | < 0.22 | 1.17 | 0.0021 |
| | **Total =** | 52.4 | | | | | **Total =** | 15.7 | |

[a] Values given are for total hydrocarbons (THC) referenced to heptane (molecular weight =100) after addition of dilution air.

[b] ppmv = parts per million by volume, as determined by the analytical laboratory.

[c] µg/L = micrograms per liter, as determined by the analytical laboratory.

**PARSONS**

Parsons Engineering Science, Inc.
1700 Broadway, Suite 900 • Denver, Colorado 80290 • (303) 831-8100 • Fax: (303) 831-8208

September 17, 1998

Mr. Jim Gonzales
AFCEE/ERT
3207 North Road, Building 532
Brooks AFB, Texas 78235-5363

RE: Air Force Contract No. F41624-94-D-8136, Order 02803
Air Conformity Determination of Flameless Thermal Oxidation and Internal Combustion Engine for VOC Off-Gas Abatement
Analytical Data Report No. 5, Source Area Reduction System, Former Lowry Air Force Base, Colorado CDRL A007A

Dear Mr. Gonzales:

Please find enclosed two copies of Tables 1, 2, and 3, which constitute Analytical Data Report No. 5 prepared by Parsons Engineering Science, Inc. (Parsons ES) for the vapor samples collected on August 27, 1998, during the demonstration of the flameless thermal oxidation (FTO) treatment unit at the Source Area Reduction System (SARS), former Lowry Air Force Base, Colorado. The FTO unit began treating contaminated soil vapors at 0800 hours on May 20, 1998. The volatile organic compound (VOC) destruction efficiency of the FTO unit, calculated using data collected on August 27, 1998 exceeded 99.99 percent for all targeted compounds. The influent vapor flow rate to the FTO unit is 105 cubic feet per minute (cfm); approximately 80 cfm soil vapors from the SARS and 25 cfm ambient air (oxygen). The FTO unit has been treating approximately 75- to 100-percent of the total SARS flow. There were no VOCs detected in the effluent sample collected on August 27, 1998. This data report is being sent within 5 working days of receipt of the analytical laboratory results report.

The July 21, 1998 sampling event included an equipment blank sample of the stainless steel tubing used to collect effluent samples. The equipment blank sample was collected after the stainless steel tube was purged for approximately 3 to 4 minutes. Methylene chloride, PCE, and TCE were detected in the equipment blank sample at concentrations of 6.3, 11, and 6 ppbv, respectively. These results indicate that the stainless steel tubing was contaminated. Therefore, this tubing was replaced before the August 27, 1998 sampling event and another equipment blank sample was collected using the new tubing. Freon 12 (20 ppbv) and THC (75 ppbv) were detected in the August 27, 1998 equipment blank sample (Table 1). The detection of THC is most likely attributed to contamination of the compression fitting that is required to connect the Tygon® tubing to the SUMMA® canister for sample collection.

The activities described below occurred between August 24 and September 15, 1998. For activities that occurred in August prior to August 24$^{th}$, please see Analytical Data report No. 4.

- On August 24, 1998, at approximately 1640 hours, the FTO unit shut down. Advanced Security Technologies informed Parsons ES of the shut down.

- On August 25, 1998, Ms. Blakemore traveled to Lowry AFB and determined the cause of shut down was low flow to the FTO unit.

- On August 26, 1998, Mr. Tom Dragoo traveled to Lowry AFB to determine the cause of the low flow to the FTO unit. Mr. Dragoo discussed the problem with Mr. Steve Archabal (Parsons ES Phoenix) and determined that condensate in the piping may be causing the low flow. Mr. Dragoo spent the morning breaking open the vapor line in various places on the FTO unit to find out if condensate was the cause for the last couple of shut downs. There was about 3 to 5 ml of fluid found in the 1/4-inch line that connects the flow meter to the influent line of the oxidizer. This restricted the flow through the flow meter and appears to have caused the low flow shut downs of the FTO unit. After reassembling the piping, Mr. Dragoo placed the unit into "run" mode at 2024 and let the FTO run over night without vapors from the SARS. The unit was not placed on vapors from the SARS in order to evaluate if the FTO shut downs were caused due to the interaction with the SARS or do to a problem with the FTO unit (i.e., condensate in the piping).

- On August 27, 1998, Mr. Dragoo traveled to the site to inspect the operation FTO unit. He arrived at the site at 0830, and the unit was operating and all parameters were stable. At 0837, the FTO unit began treating vapors from the SARS. Mr. Dragoo collected the sixth (6) round of samples including a second equipment blank on the new sample tubing.

- On August 27, 1998, Mr. Guest transmitted an e-mail message to Mr. Gonzales, Mr. Kroehl, and Mr. Miller informing them of the operational status of the FTO unit. The message also stated that Parsons ES intends to shut down the unit on Monday, August 31st to prepare it for demobilization and prior to shut down, another round of influent and effluent samples will be collected.

- On September 1, 1998, Parsons ES distributed ADR No. 4 for the vapor samples collected on August 10, 1998, from the FTO unit. The data report was distributed within 5 working days of receipt of the analytical laboratory results.

- On September 1, 1998, Mr. Pete Guest contacted Mr. Gonzales regarding shut down of the FTO unit. Mr. Gonzales confirmed that Parsons ES should shut down the unit and that the unit will be transferred to McClellan AFB, CA. Mr. Guest transmitted via facsimile to Mr. Gonzales an example letter for transferring the FTO unit from this contract (Contract F41624-94-D-8136, DO 28) to McClellan AFB.

- On September 1, 1998, Mr. Guest contacted Mr. Trent Watney (Versar) regarding operation and sampling of the FTO unit. Mr. Watney said that the Source Area Reduction System (SARS) shut down the evening of August 31st. Parsons ES therefore will not be able to collect final influent and effluent samples from the FTO unit.

- On September 1, 1998, at 1413 hours, Ms. Judy Blakemore shut down the FTO unit and the FTO demonstration at Lowry AFB concluded.

- On September 1, 1998, Parsons ES contacted Advanced Security Technologies to discontinue monitoring the operation of the FTO unit.

- On September 2, 1998, Parsons ES received via facsimile from Mr. Gonzales a letter dated September 1st addressed to Mr. Guest from Mr. Gonzales authorizing Parsons ES to cease operations of the FTO unit and begin all necessary demobilization tasks immediately. The letter also stated that the FTO unit will be transferred from this contract to McClellan AFB.

- On September 3, 1998, Parsons ES received via facsimile from Mr. Gonzales a letter dated September 3rd addressed to Mr. Kevin Wong (SM-ALC/EMRP) from Mr. Gonzales informing him that the FTO unit will transferred from this contract to McClellan AFB, and the transfer becomes effective upon delivery to McClellan AFB.

- On September 8, 1998, Mr. Guest contacted Mr. Wong to discuss the mobilization of the FTO unit to McClellan AFB. Mr. Wong said that Mr. Jerry Vincent (SM-ALC/EMRP) would be the point of contact to coordinate mobilization of the FTO unit to McClellan AFB.

- On September 10 and 11, 1998, Mr. Dragoo traveled to Lowry AFB to prepare the FTO unit for transportation to McClellan AFB. The security fence around the FTO unit was removed from the site on the morning of September 10th.

- On September 14, 1998, AmeriGas® emptied the propane tank mounted on the FTO unit trailer.

- On September 15, 1998, at 1100 hours, Rocky Mountain Alltrans, Inc. arrived at Lowry AFB to transport the FTO unit to McClellan AFB. Mr. Dragoo assisted the transportation company with hook-up of the FTO unit and took pictures to document the condition of the unit prior to removal from the site. The unit departed the site at 1300 hours.

- On September 17, 1998, at 0730 hours, Rocky Mountain Alltrans, Inc. delivered the FTO unit to McClellan AFB, CA. Mr. Vincent received the unit.

## Operational Efficiency

The FTO unit has a cumulative operational efficiency of 57-percent from start-up. The majority of the downtime has been associated with problems external to the FTO unit (see Table 2). During the weeks of August 17 and 24, 1998, there was a problem with condensate in the ¼-inch line that connected the flow meter to the influent line of the oxidizer. This caused two shut downs of the FTO unit due to low flow. This problem was resolved on August 26th, as described above.

Per Contracts Data Requirements List (CDRL) A007A, one reproducible copy of the enclosed data tables has been provided to AFCEE/MSR on a 3.5-inch diskette in IBM-compatible format. If you have additional questions or comments please call me at (303) 764-1919, or Mr. Steve Archabal at (602) 852-9110.

Sincerely,

PARSONS ENGINEERING SCIENCE, INC.

Peter R. Guest

Peter R. Guest, P.E.
Project Manager

Enclosures

cc: Mr. Mike Deaton, HSC/PKVAB (LOT only)
Mr. Jane Keller, AFCEE/MSR (LOT and diskette only)
Mr. Bill Jacobs, Booz•Allen & Hamilton
Mr. Mark Lucas, Waste Policy Institute
Mr. John Miller, AFCEE/ERB
Mr. Bruce Kroehl, AFBCA - Lowry
Mr. Mike Galvin, Versar
Mr. Bill Gallant, Versar
Mr. Steve Archabal, Parsons ES Phoenix
Mr. Chris Gable, Thermatrix, Inc.
Mr. Jack Sullivan, Parsons ES Oklahoma

# TABLE 1
## DETECTED ANALYTES IN EXTRACTED VAPOR STREAM SAMPLES
## MAY TO AUGUST 1998
## FLAMELESS THERMAL OXIDATION DEMONSTRATION
## SOURCE AREA REDUCTION SYSTEM
## FORMER LOWRY AIR FORCE BASE, COLORADO

| | Detected Concentration (ppbv)[a] | | | | | | | | | | | | | | | | | | | | | | |
|---|---|---|---|---|---|---|---|---|---|---|---|---|---|---|---|---|---|---|---|---|---|---|---|
| Analyte | Pre-Dilution Influent Sample SARS-IK01-80 5/20/98 | Post Dilution Influent Sample SARS-IOX1-105 5/20/98 | Effluent Sample SARS-EOX1-105 5/20/98 | Destruction Efficiency (percent) | Post Dilution Influent Sample SARS-IOX2-105 5/22/98 | Effluent Sample SARS-EOX2-105 5/22/98 | Destruction Efficiency (percent) | Post Dilution Influent Sample SARS-IOX3-105 6/18/98 | Effluent Sample SARS-EOX3-105 6/18/98 | Destruction Efficiency (percent) | Post Dilution Influent Sample SARS-IOX4-105 7/21/98 | Effluent Sample SARS-EOX4-105 7/21/98 | Destruction Efficiency (percent) | Effluent Sample Equipment Blank EB-1 7/21/98 | Post Dilution Influent Sample SARS-IOX5-105 8/10/98 | Effluent Sample SARS-EOX5-105 8/10/98 | Destruction Efficiency (percent) | Post Dilution Influent Sample SARS-IOX6-105 8/27/98 | Effluent Sample SARS-EOX6-105 8/27/98 | Destruction Efficiency (percent) | Effluent Sample Equipment Blank EB-1 8/27/98 |
| Freon 12 | <53[b] | <35 | <5.4 | NA[c] | <42 | <5.3 | NA | <25 | <5.1 | NA | <37 | <5.4 | NA | <5.1 | <25 | <5.3 | NA | <21 | <5.7 | NA | 28 |
| vinyl chloride | 120 | 100 | <5.4 | >99.99 | 100 | <5.3 | >99.99 | 96 | <5.1 | >99.99 | 100 | <5.4 | >99.99 | <5.1 | 71 | <5.3 | >99.99 | 180 | <5.7 | >99.99 | <4.9 |
| 1,1-dichlorothene | 280 | 210 | <5.4 | >99.99 | 200 | <5.3 | >99.99 | 150 | <5.1 | >99.99 | 260 | <5.4 | >99.99 | <5.1 | 130 | <5.3 | >99.99 | 180 | <5.7 | >99.99 | <4.9 |
| methylene chloride | 130 | 110 | <5.4 | >99.99 | 100 | <5.3 | >99.99 | 66 | <5.1 | >99.99 | 100 | <5.4 | >99.99 | 6.3 | 120 | <5.3 | >99.99 | 69 | <5.7 | >99.99 | <4.9 |
| 1,1-dichlorothane | <53 | <35 | <5.4 | NA | <42 | <5.3 | NA | <25 | <5.1 | NA | 47 | <5.4 | >99.99 | <5.1 | <25 | <5.3 | NA | 35 | <5.7 | >99.99 | <4.9 |
| cis-1,2-dichloroethene | 940 | 700 | <5.4 | >99.99 | 680 | <5.3 | >99.99 | 480 | <5.1 | >99.99 | 1500 | <5.4 | >99.99 | <5.1 | 760 | <5.3 | >99.99 | 960 | <5.7 | >99.99 | <4.9 |
| 1,1,1-trichloroethane | 860 | 650 | <5.4 | >99.99 | 650 | <5.3 | >99.99 | 650 | <5.1 | >99.99 | 930 | <5.4 | >99.99 | <5.1 | 460 | <5.3 | >99.99 | 540 | <5.7 | >99.99 | <4.9 |
| tetrachloroethene | 210 | 160 | <5.4 | >99.99 | 180 | <5.3 | >99.99 | 140 | <5.1 | >99.99 | 280 | 10 | 96.43 | 11 | 180 | <5.3 | >99.99 | 120 | <5.7 | >99.99 | <4.9 |
| toluene | <53 | <35 | 7.2 | NA | <42 | <5.3 | NA | <25 | <5.1 | NA | <37 | <5.4 | NA | <5.1 | <25 | <5.3 | NA | <21 | <5.7 | NA | <4.9 |
| m,p-Xylene | <53 | <35 | 12 | NA | <42 | <5.3 | NA | <25 | <5.1 | NA | <37 | <5.4 | NA | <5.1 | <25 | <5.3 | NA | <21 | <5.7 | NA | <4.9 |
| o-Xylene | <53 | <35 | 6 | NA | <42 | <5.3 | NA | <25 | <5.1 | NA | <37 | <5.4 | NA | <5.1 | <25 | <5.3 | NA | <21 | <5.7 | NA | <4.9 |
| 1,2,4-trimethylbenzene | <53 | <35 | 6.1 | NA | <42 | <5.3 | NA | <25 | <5.1 | NA | <37 | <5.4 | NA | <5.1 | <25 | <5.3 | NA | <21 | <5.7 | NA | <4.9 |
| Acetone | <210 | <140 | <22 | NA | <170 | <21 | NA | <99 | 23 | NA | <150 | 23 | NA | <20 | <100 | <21 | NA | <84 | <23 | NA | <20 |
| 2-butanone | 300 | <140 | <22 | NA | <170 | <21 | NA | <99 | <20 | NA | <150 | <22 | NA | <20 | <100 | <21 | NA | <84 | <23 | NA | <20 |
| Tetrahydrofuran | 960 | <140 | 38 | NA | <170 | <21 | NA | <99 | <20 | NA | <150 | <22 | NA | <20 | <100 | <21 | NA | <84 | <23 | NA | <20 |
| cyclohexane | <210 | <140 | 23 | NA | <170 | <21 | NA | <99 | <20 | NA | <150 | <22 | NA | <20 | <100 | <21 | NA | <84 | <23 | NA | <20 |
| 1,4-dioxane | <210 | <140 | 24 | NA | <170 | <21 | NA | <99 | <20 | NA | <150 | <22 | NA | <20 | <100 | <21 | NA | <84 | <23 | NA | <20 |
| trichloroethene | 9200 | 7000 | <5.4 | >99.99 | 6900 | 9.8 | 99.86 | 6200 | <20 | >99.99 | 11000 | <5.4 | >99.99 | 6 | 5100 | <5.3 | >99.99 | 5500 | <5.7 | >99.99 | <4.9 |
| THC[d] | 15000 | 9500 | 540 | 94.32 | 8900 | <53 | >99.99 | 9400 | 96 | 98.98 | 8500 | <54 | >99.99 | <51 | 3000 | <53 | >99.99 | 10000 | <57 | >99.99 | 75 |

[a] ppbv = parts per billion by volume, as determined by Air Toxics, Folsom, CA using USEPA Method TO-14 GC/MS Full Scan. See Table 2 for field measurements and system operating conditions at the time of sampling.

[b] < = Compound not detected, value shown represents the reporting limit.

[c] NA = Not applicable.

[d] THC = Total hydrocarbons referenced to heptane (molecular weight = 100).

shared\ed\hhmarr\lowry\adr5Table 1

TABLE 2
FIELD MEASUREMENTS AND SYSTEM OPERATING CONDITIONS
FLAMELESS THERMAL OXIDATION DEMONSTRATION
SOURCE AREA REDUCTION SYSTEM
FORMER LOWRY AIR FORCE BASE, COLORADO

| Date[a] | Time | Possible Run Time (hours) | Cumulativ Possible Run Time (hours) | Run Time Meter (hours) | Run Time Since Last Event (hours) | Cumulativ Run Time[b] (hours) | Cumulative Down Time Due To Unit Problems (hours) | Cummulative Down Time Due To External Problems (hours) | Isolated Down Time (hours) | Flow Rate Into Oxidizer (scfm) | Fume Portion of Flow (percent) | Ambient Portion of Flow (percent) | Comments |
|---|---|---|---|---|---|---|---|---|---|---|---|---|---|
| 5/20/98 | 0800 | 0 | 0 | NR[c] | 0 | 0.0 | 0.0 | 0.0 | | 105 | 75 | 25 | Collected SARS-IKO1-80, SARS-IOX1-105, and SARS-EOX1-105 |
| 5/21/98 | 1017 | 26.2 | 26.2 | 5725.0 | 26.2 | 26.2 | 0.0 | 0.0 | | | | | |
| 5/22/98 | 1030 | 24.2 | 50.4 | NR | 24.2 | 50.4 | 0.0 | 0.0 | | 105 | 75 | 25 | Collected SARS-IOX2-105 and SARS-EOX2-105 |
| 5/26/98 | 0200 | 87.5 | 137.9 | 5841.8 | 87.5 | 137.9 | 0.0 | 0.0 | | | | | System down due to power outage |
| 5/28/98 | 0910 | 55.2 | 193.1 | 5841.8 | 0.0 | 137.9 | 0.0 | 55.2 | 55.2 | 105 | 75 | 25 | System restart |
| 6/3/98 | 1622 | 151.3 | 344.4 | 5993.1 | 151.3 | 289.2 | 0.0 | 55.2 | | | | | System down due to SARS shut-down resulting in low flow |
| 6/4/98 | 0712 | 14.8 | 359.2 | 5993.1 | 0.0 | 289.2 | 0.0 | 69.9 | 14.8 | 105 | 75 | 25 | System restart |
| 6/4/98 | 2242 | 15.5 | 374.7 | 6008.6 | 15.5 | 304.7 | 0.0 | 69.9 | | | | | System down due to high water level in moisture seperator |
| 6/10/98 | 0655 | 128.2 | 502.9 | 6008.6 | 0.0 | 304.7 | 0.0 | 198.1 | 128.2 | 105 | 75 | 25 | System restart |
| 6/18/98 | 0900 | 186.7 | 689.6 | 6195.3 | 186.7 | 491.4 | 0.0 | 198.1 | | 105 | 75 | 25 | Collected SARS-IOX3-105 and SARS-EOX3-105 |
| 6/21/98 | 1813 | 275.3 | 778.2 | 6283.9 | 275.3 | 580.0 | 0.0 | 198.1 | | | | | System down due to high water level in moisture seperator |
| 6/23/98 | 1000 | 39.8 | 818 | 6283.9 | 0.0 | 580.0 | 0.0 | 238.0 | 39.8 | 105 | 75 | 25 | System restart |
| 7/8/98 | 1700 | 367.1 | 1185.1 | 6651.0 | 367.1 | 947.1 | 0.0 | 238.0 | | | | | System down due to power outage |
| 7/13/98 | 1225 | 115.5 | 1300.6 | 6651.0 | 0.0 | 947.1 | 0.0 | 353.5 | 115.5 | 105 | 75 | 25 | System restart |
| 7/15/98 | 1025 | 46 | 1346.6 | 6697.0 | 46.0 | 993.1 | 0.0 | 353.5 | | | | | System down due to power outage |
| 7/21/98 | 0900 | 142.6 | 1489.2 | 6697.0 | 0.0 | 993.1 | 0.0 | 496.1 | 142.6 | 105 | 75 | 25 | System restart, Collected SARS-IOX4-105 and SARS-EOX4-105 and EB-1 |
| 7/24/98 | 1930 | 82.5 | 1571.7 | 6779.5 | 82.5 | 1075.6 | 0.0 | 496.1 | | | | | System down due to power outage |
| 7/28/98 | 0800 | 84.5 | 1656.2 | 6779.5 | 0.0 | 1075.6 | 0.0 | 580.6 | 84.5 | 105 | 75 | 25 | System restart |
| 7/30/98 | 0110 | 41.2 | 1697.4 | 6820.7 | 41.2 | 1116.8 | 0.0 | 580.6 | | | | | System down due to power outage |
| 8/3/98 | 0805 | 102.9 | 1800.3 | 6820.7 | 0.0 | 1116.8 | 0.0 | 683.5 | 102.9 | 105 | 75 | 25 | System restart |
| 8/7/98 | 1017 | 98.2 | 1898.5 | 6918.9 | 98.2 | 1215.0 | 0.0 | 683.5 | | | | | System down due to power outage |
| 8/10/98 | 0935 | 71.3 | 1969.8 | 6918.9 | 0.0 | 1215.0 | 0.0 | 754.8 | 71.3 | 105 | 80 | 20 | System restart, Collected SARS-IOX5-105 and SARS-EOX5-105 |
| 8/10/98 | 1736 | 8.1 | 1977.9 | 6927.0 | 8.1 | 1223.1 | 0.0 | 754.8 | | | | | System down due to power outage |
| 8/12/98 | 0910 | 39.5 | 2017.4 | 6927.0 | 0.0 | 1223.1 | 0.0 | 794.3 | 39.5 | 105 | 75 | 25 | System restart |
| 8/13/98 | 1316 | 28.1 | 2045.5 | 6955.1 | 28.1 | 1251.2 | 0.0 | 794.3 | | | | | System down due to power outage |
| 8/17/98 | 0914 | 68.0 | 2113.5 | 6955.1 | 0.0 | 1251.2 | 0.0 | 862.3 | 68.0 | 105 | 75 | 25 | System restart |
| 8/19/98 | 0420 | 43.1 | 2156.6 | 6998.2 | 43.1 | 1294.3 | 0.0 | 862.3 | | | | | System down due to low flow FALL-206 |
| 8/19/98 | 0938 | 5.3 | 2161.9 | 6998.2 | 0.0 | 1294.3 | 5.3 | 862.3 | 5.3 | 105 | 75 | 25 | System restart |
| 8/19/98 | 2050 | 11.2 | 2173.1 | 7009.4[d] | 11.2 | 1305.5 | 5.3 | 862.3 | | | | | System down due to power outage |
| 8/24/98 | 0727 | 106.6 | 2279.7 | 0.0 | 0.0 | 1305.5 | 5.3 | 968.9 | 106.6 | 105 | 75 | 25 | System restart |
| 8/24/98 | 1640 | 9.2 | 2288.9 | 9.2 | 9.2 | 1314.7 | 5.3 | 968.9 | | | | | System down due to low flow FALL-206 |
| 8/26/98 | 1619 | 47.7 | 2336.6 | 9.2 | 0.0 | 1314.7 | 53.0 | 968.9 | 47.7 | 105 | 75 | 25 | System restart |
| 8/27/98 | 1006 | 17.8 | 2354.4 | 27.1 | 17.8 | 1332.5 | 53.0 | 968.9 | | | | | Collected SARS-IOX6-105 and SARS-EOX6-105 and EB-2 |
| 9/1/98 | 1413 | 124.1 | 2478.5 | 151.2 | 124.1 | 1456.6 | 53.0 | 968.9 | | 105 | 75 | 25 | FTO unit is shut down. Conclusion of FTO demonstration and sampling. |

**Cumulative Operational Efficiency = 57%**
**Unit Problems Operational Efficiency = 98%**
**External Problems Operational Efficiency = 61%**

[a] Vapors from IRAEW-01 through IRAEW-15 are being treated.
[b] Cumulative run time includes time during start-up (i.e., purge, preheat, cool bed, and profile modes).
[c] NR = not recorded.
[d] This hour meter reading corresponds with Advanced Security Technologies call to Parsons ES. The hour meter was broken.

# TABLE 3
## TOTAL HYDROCARBON MASS REMOVAL AND EMISSIONS
### FLAMELESS THERMAL OXIDATION DEMONSTRATION
### SOURCE AREA REDUCTION SYSTEM
### FORMER LOWRY AIR FORCE BASE, COLORADO

| Date Sampled | Extraction Wells | Days of Operation | Influent THC[a] Concentration (ppmv)[b] | Influent THC[a] Concentration (µg/L)[c] | Flow Rate (scfm) | Effluent THC Concentration (ppmv) | Effluent THC Concentration (µg/L) | Pounds of THC Remove | Total Daily THC Emissions[b] (pounds/day) |
|---|---|---|---|---|---|---|---|---|---|
| 5/20/98 | IRAEW 01-15 | 1.0 | 9.5 | 39 | 105 | 5.4 | 22 | 0.37 | 0.2 |
| 5/22/98 | IRAEW 01-15 | 2.0 | 8.9 | 37 | 105 | <0.05 | < 0.22 | 0.70 | 0.0021 |
| 6/18/98 | IRAEW 01-15 | 18.4 | 9.0 | 37 | 105 | 0.10 | < 0.41 | 6.48 | 0.0039 |
| 7/21/98 | IRAEW 01-15 | 21.0 | 8.5 | 35 | 105 | <0.05 | < 0.22 | 6.99 | 0.0021 |
| 8/10/98 | IRAEW 01-15 | 10.0 | 3.0 | 12 | 105 | <0.05 | < 0.22 | 1.17 | 0.0021 |
| 8/27/98 | IRAEW 01-15 | 4.5 | 10.0 | 41 | 105 | <0.05 | < 0.22 | 1.74 | 0.0021 |
| | Total = | 56.9 | | | | | Total = | 17.4 | |

[a] Values given are for total hydrocarbons (THC) referenced to heptane (molecular weight =100) after addition of dilution air.

[b] ppmv = parts per million by volume, as determined by the analytical laboratory.

[c] µg/L = micrograms per liter, as determined by the analytical laboratory.

# APPENDIX D

# VENDOR QUOTES FOR VARIOUS VAPOR TREATMENT TECHNOLOGIES

# VENDOR QUOTATION

# FLAMELESS THERAMAL OXIDIZER SYSTEM

File: 728414.0500
SSER
Vendor Quote
cc: P. Guest
B. Plueh
T. Dragoo

TMX
Industrial Technology Solutions

308 North Peters Road, Suite 225
Knoxville Tennessee 37922
Tel: (423) 539-9603
FAX: (423) 539-9643

**Thermatrix Inc.**

2025 Gateway Place, Suite 132
San Jose, California 95110
Tel: (408) 453-0490
FAX: (408) 453-0492

September 14, 1998

Mr. Tom Dragoo
Parsons Engineering Science, Inc.
1700 Broadway, Suite 900
Denver, CO 80290
PH: 303-831-8100

**VIA FAX: 303-831-8208 10 pages**

Dear Mr. Dragoo:

**SUBJECT: THERMATRIX PROPOSAL NO. 8241: SVE Application**

Thank you for your interest in Thermatrix flameless thermal oxidizer (FTO) technology and for the opportunity to submit this budget proposal for treating a SVE stream. The FTO is uniquely suited for this application for a number of reasons:

- **Proven 99.99% DRE, even on chlorinated streams**
- **Stable operation even with highly variable off-gas streams**
- **Can be installed in Class I, Division 2 classified areas**
- **NOx and CO emissions well below regulatory standards**
- **FTO operation assures continuous compliance**

**Design Basis:**

The fume stream is air containing 7.4 ppmv TCE, 7 ppmv heptane, 1 ppmv DCE, 1 ppmv TCA and other trace chlorinated VOCs at a flow rate of 80 and 175 CFM.

**Scope of Supply:**

The oxidizer recommended for the 80 CFM application is an ES-100 model. Two ES-100 oxidizers are required to handle the 175 CFM fume stream. Each skid-mounted ES-100 system includes the following: flameless oxidizer, electric heaters, power controller, control panel, power panel, fume train, dilution air blower, stack, piping and instrumentation. Standard system specifications are attached.

**Budget Price:**

The budget price for each ES-100 system is $95,000. The price does not include taxes, spare parts, freight, handling, site preparation, foundations, installation, commissioning, startup, training or performance testing. These parts and services are available for turnkey systems.

**Performance and Guarantee:**

Thermatrix guarantees oxidizer performance at 99.99% VOC destruction or 1 ppmv total VOC in the oxidizer exhaust, whichever is least restrictive. Typical thermal $NO_X$ emissions are 2 ppmv and CO is less than 10 ppmv.

Equipment provided by Thermatrix is warranted to be free of defects in materials or workmanship for a period of 12 months from initial operation or 18 months from notice of readiness to ship.

**Delivery:**

Typical delivery of oxidizer systems, FOB point of manufacture, is 18 to 22 weeks after acceptance of a purchase order, allowing 4 to 6 weeks for development of engineering drawings and documents and 2 weeks for approval by buyer. The additional cost for expedited delivery can be provided with a firm-price quotation at the request of the buyer.

**Utility Requirements:**

Based on 8760 annual operating hours at the design conditions, the estimated operating costs for the application described above would include:

| Utility Item | 80 CFM Stream | 175 CFM Stream |
|---|---|---|
| Electricity | 47 kW ($21,000/yr) | 103 kW ($45,000/yr) |
| Power consumption is based on electrical heating requirements. Electricity cost is assumed to be $0.05/kW-hr. | | |

Although the operating costs for the ES-100 may be higher than GAC for this application, the ES-100 can handle significant increases in VOC loading without impacting oxidizer destruction efficiency. Power consumption for electrical heating will decrease as VOC loading increases. Increases in VOC loading in a GAC system will result in high carbon use and may result in VOC breakthrough and permit compliance problems.

**Clarifications:**

Permits for Thermatrix flameless oxidizers have been issued in several states including California, Idaho, Louisiana, Maryland, Mississippi, New Jersey, New York, North Carolina, Ohio, Pennsylvania and Texas. Permits for carbon adsorption systems or conventional flame-based incinerators may require a continuous emission monitor (CEM) to verify performance during operation. Typically, Thermatrix units do not require a CEM, and temperature is the only monitored process parameter required to verify performance.

The Thermatrix flameless thermal oxidizer is not an incineration unit. Many specifications related to the design, construction or operation of burners, combustion chambers and other parts of conventional incineration or thermal oxidation units may not apply.

The proposed equipment and pricing are based on Thermatrix standard industrial specifications and layout. Customized systems can be provided as an option for additional cost. The cost impact will be a function of the extent of the layout changes or additional specifications imposed on the project.

We trust you will find this information useful and appreciate your interest in Thermatrix technology. We look forward to working with you on this application. If you have any questions or if we can provide further information, please contact me at (408) 453-0490.

Sincerely,

Susan T. DesJardin

Susan T. DesJardin, P.E.
Manager, Applications Engineering

Enclosures
- Thermatrix Installation List
- ES-100 Piping and Instrument Diagram
- ES-100 General Arrangement

cc: Richard Scheig, Thermatrix Inc.

TMX Industrial Technology Solutions

Thermatrix Inc.

**Equipment Supply Scope**

| Major Equipment Supply Scope | Standard System | Optional | Provided by Buyer |
|---|---|---|---|
| Process piping from the plant to the termination points at the Thermatrix ES-100 system. | | | √ |
| Dilution air blower, motor and associated equipment. | √ | | |
| Spare dilution air blower, motor and associated equipment. | | √ | |
| Fume blower, motor and associated equipment. | | √ | |
| Oxidizer vessel, preheater, refractory, thermowells, thermocouples and ceramic media. | √ | | |
| Skid-mounting and preassembly of piping and instruments. | √ | | |
| Motor starters, starter cabinets and wiring from the MCC to the oxidizer system. | | | √ |
| Motor control center. | | √ | |
| Exhaust stack with sample ports | √ | | |
| Platform for access to stack sampling ports including OSHA approved handrails and toeplates. | | √ | |

**Engineering Documentation**

The engineering documents, drawings and data that will be provided for approval and for informational purposes are given in the following table.

| Item No. | Document | For Approval | | For Informational Purposes | |
|---|---|---|---|---|---|
| | | Qty | Date | Qty | Date |
| 1 | System Design Criteria Document | 3 | 4 Wks AAO | | |
| 2 | Piping and Instrument Diagram | 3 | 4 Wks AAO | | |
| 3 | Process Flow Diagram | 3 | 4 Wks AAO | | |
| 4 | General Arrangement - Plan and Elevation | 3 | 3 Wks ARAD | | |
| 5 | Electrical One-Line Drawing | 3 | 6 Wks ARAD | | |
| 6 | Foundation Load and Anchor Bolt Plan | 3 | 6 Wks ARAD | | |
| 7 | Installation, Operation & Maintenance Manual including:<br>- Process Control Description<br>- Recommended Spare Parts List for 1 Year with Prices<br>- Equipment, Instrument, Valve, Line Schedule<br>- Equipment Assembly Drawings w/BOMs<br>- Instrument Data Sheets<br>- Equipment Data Sheets including Performance Curves | | | 3 | At Shipment |
| AAO | After Acceptance of Order | | | | |
| ARAD | After Receipt of Approved Drawings | | | | |

TMX
Industrial Technology Solutions

**Thermatrix Inc.**

**Project Scope:**

Installation of the oxidizer system will be on foundations provided by the buyer. Thermatrix will provide dimensions and loadings. Installation shall include all necessary unloading, lifts and placement. Thermatrix will be responsible for the following project activities as noted below.

| Project Activities | Included in Base Price | Optional | Provided by Buyer |
|---|---|---|---|
| Participation in Process Safety Management (PSM) Process Hazards Analysis (PHA) using the HAZOP methodology. | | √ | |
| Pre-assembly of fume train and air train on skid. | √ | | |
| Pre-wiring of panels, pre-ship wiring functional check and mechanical fit-up. | √ | | |
| Wiring of mounted instruments and valves to control panels. | √ | | |
| Crating and preparation for shipment. | √ | | |
| Shipping to jobsite. | | √ | |
| Unloading and temporary storage. | | | √ |
| Site preparation including civil and foundation preparation. | | | √ |
| Mechanical and electrical installation of pre-assembled skids, oxidizer vessel and internals and dilution air blower(s) on foundations. | | √ | √ |
| Commissioning/startup assistance services. | | √ | |
| System performance testing services. | | √ | |

TMX
Industrial Technology Solutions

# INSTALLATION LIST

| INSTALLED | UNITS | LOCATION | INDUSTRY | APPLICATION | COMPOUNDS TREATED | MODEL | SCFM |
|---|---|---|---|---|---|---|---|
| 88Q3 | 1 | California | Chemical | Wastewater Treatment | Carbon Tet, Chloroform | ES | 100 |
| 92Q4 | 1 | New Jersey | Chemical | Wastewater Treatment | Ethyl Chloride | ES | 100 |
| 93Q2 | 1 | New Jersey | Manufacturing | Process Vent | Misc. Hydrocarbons, Carbon Monoxide | ES | 1 |
| 93Q3 | 8 | California | Petroleum Refining | Fugitive Emissions | Gasoline, Methyl Tertbutyl Ether (MTBE), Propane, Naphtha, Methyl Ethyl Ketone (MEK), Benzene | ES | 1 |
| 94Q3 | 1 | Michigan | Manufacturing | Paint Booth | Methyl Ethyl Ketone (MEK), Methyl Isobutyl Ketone (MIBK) | GR | 6500 |
| 94Q4 | 1 | Idaho | Waste Treatment | Process Vent | Aliphatics, Benzene, Toluene, Xylene, Ethylbenzene, Tetrachloroethylene, Butadiene, Hydrogen Sulfide, Carbon Monoxide | GS | 4000 |
| 94Q4 | 1 | Pennsylvania | Chemical | Process Vent, Batch | Toluene, Acrylic Acid, Heptane | ES | 100 |
| 94Q4 | 2 | California | Petroleum Refining | Fugitive Emissions | Aliphatics, Aromatics | ES | 5 |
| 95Q1 | 1 | Texas | Petroleum Refining | Wastewater Treatment | Heptane, Hexane, Octane, Benzene, Toluene, Xylenes | GR | 1250 |
| 95Q1 | 1 | Louisiana | Chemical | Process Vent, Batch | Methyl Chloride, Methanol, Carbon Monoxide, Formaldehyde, Bischloromethyl Ether (BCME) | GSC | 1500 |
| 95Q1 | 1 | Pennsylvania | Chemical | Process Vent | Amines, VOCs | ES | 100 |
| 95Q1 | 2 | California | Petroleum Refining | Fugitive Emissions | Refinery VOCs | ES | 1 |
| 95Q3 | 1 | Pennsylvania | Chemical | SVE | Chlorinated VOCs from Soil Vapor Extraction | GS | 150 |
| 95Q3 | 1 | Mississippi | Pulp and Paper | Process Vent | Pinenes, Hydrogen Sulfide, Methyl Mercaptan, Dimethyl Sulfide (DMS), Dimethyl Disulfide (DMDS) | GSC | 3000 |
| 95Q4 | 2 | Idaho | Remediation | SVE | Carbon Tetrachloride, Chloroform, Tetrachloroethylene, Trichloroethane (TCA), Trichloroethylene (TCE) | GR | 400 |
| 95Q4 | 1 | Idaho | Remediation | SVE | Carbon Tetrachloride, Chloroform, Tetrachloroethylene, Trichloroethane (TCA), Trichloroethylene (TCE) | GR | 200 |
| 95Q4 | 1 | Maryland | Chemical | Process Vent, Batch | Dichlorofluromethane (R22), Methylsufuryl Chloride, Pyridine, Toluene, Dimethyl Formamide, Acetic Acid, Carbon Monoxide, Acetaldehyde, Butanol, Methyl Isobutyl Ketone (MIBK), Xylene, ICC/MAC | GSC | 3000 |
| 95Q4 | 1 | New York | Remediation | SVE | PCB, Transformer Oil | GR | 2000 |
| 96Q1 | 1 | Canada | Remediation | Soil Treatment | VOCs from Thermal Desorber | GR | 12000 |
| 96Q1 | 1 | California | Remediation | Soil Treatment | Benzene, Toluene, Xylene, Dimethylpentane, Chlorophenols | GR | 30000 |
| 96Q1 | 1 | Maryland | Chemical | Process Vent, Batch | Dichlorofluromethane (R22), Methylsufuryl Chloride, Pyridine, Toluene, Dimethyl Formamide, Acetic Acid, Carbon Monoxide, Acetaldehyde, Butanol, Methyl Isobutyl Ketone (MIBK), Xylene, ICC/MAC | GSC | 4500 |
| 96Q1 | 1 | Texas | Petrochemical | Process Vent | VOCs | GS | 750 |
| 96Q1 | 1 | England | Chemical | Process Vent, Batch | Ammonia, Hydrogen, Pyridine, Picolines, Paraffin Oil (Kerosene, Diesel) | GR | 5000 |

TMX
Industrial Technology Solutions

# INSTALLATION LIST

| INSTALLED | UNITS | LOCATION | INDUSTRY | APPLICATION | COMPOUNDS TREATED | MODEL | SCFM |
|---|---|---|---|---|---|---|---|
| 96Q1 | 1 | Texas | Remediation | SVE | Chlorinated VOCs in SVE off-gas | GS | 120 |
| 96Q3 | 1 | Texas | Chemical | Process Vent | Methylene Chloride, Methanol | GSC | 1000 |
| 96Q3 | 1 | North Carolina | Pharmaceutical, Cosmetics | Process Vent, Batch | VOCs | GS | 2500 |
| 96Q3 | 1 | England | Chemical | Process Vent | Methyl Chloride, Methylene Chloride, Chloroform, Ethyl Chloride, Ethanol, Carbon Tetrachloride, Chlorine, Chlorothene, Xylene | GSC | 750 |
| 96Q3 | 1 | England | Automotive | Engine Emissions | VOCs | ESB | 5 |
| 96Q3 | 1 | Texas | Petrochemical | Tank Vents | Benzene, Toluene, Xylene | GS | 8000 |
| 96Q3 | 1 | Texas | Petrochemical | Tank Vents | Benzene, Toluene, Xylene | GS | 3000 |
| 96Q3 | 1 | Texas | Chemical | Process Vent, Batch | Phosgene, Methylchloroformate, Ethylchloroformate, Heptane, Methanol, Carbon Monoxide | GSC | 3800 |
| 96Q3 | 1 | Utah | Medical | Process Vent, Batch | Ethylene Oxide | GR | 10000 |
| 96Q3 | 1 | Maryland | Waste Treatment | Solid Waste Treatment | Various organics | GR | 400 |
| 96Q4 | 1 | Texas | Chemical | Wastewater Treatment | Acetone, Allyl Chlorides, Chloroform, Mesityl Oxide, Carbon Monoxide | GSC | 600 |
| 96Q4 | 1 | Netherlands | Petrochemical | Tank Vents | Benzene, Naphthalene, Indene | GS | 500 |
| 96Q4 | 1 | England | Chemical | Process Vent | Butadiene, Butenes, Propene, Hydrogen Sulfide | ES | 100 |
| 96Q4 | 1 | England | Chemical | Process Vent | VOCs | ES | 10 |
| 96Q4 | 1 | Texas | Pulp and Paper | Process Vent | Acetone, Methyl Mercaptan, Dimethyl Sulfide (DMS), Dimethyl Disulfide (DMDS), Methanol, Terpenes, Cresol, Acetaldehyde, Cumene, Ethanol | GR | 9300 |
| 97Q3 | 1 | Taiwan | Chemical | Process Vent, Batch | Styrene, Butadiene, Acrylonitrile, Acrylic Acid, Methyl Methacrylate | GR | 125 |
| 97Q3 | 1 | California | Remediation | Wastewater Treatment | CVOCs | GRC | 250 |
| 97Q3 | 1 | California | Remediation | SVE | Trichloroethylene (TCE), Perchloroethylene, Dichloroethane, Trichlorotrifluoroethene, Trichloroethane (TCA) | A31 | 350 |
| 97Q4 | 1 | Taiwan | Petrochemical | Tank Vents | Acrylic Acid, Butyl Acrylate, Ethylhexyl Acrylate, Styrene | GS | 5000 |
| 97Q4 | 1 | Taiwan | Petrochemical | Tank Vents | Vinyl Chloride (VCM), Ethylene Dichloride (EDC), Epichlorohydrin (ECH), Chloroform, Chloroethane | GSC | 1000 |
| 97Q4 | 1 | Ohio | Chemical | Tank Vents | Isopropanol, Ethyl Acetate, Ethyl Acrylate, Methyl Methacrylate, Methyl Styrene | ES | 100 |
| 98Q1 | 1 | Minnesota | Chemical | Tank Vents | Dicyclopentadiene, Styrene, Acetone | GR | 6500 |
| 98Q1 | 1 | New Jersey | Remediation | SVE | Trichloroethane (TCA), Trichloroethylene (TCE), Dichloroethylene (DCE), Methylene Chloride, Freon 113, Toluene | MB | 2000 |
| 98Q2 | 1 | Texas | Petroleum Refining | Wastewater Treatment | Hydrogen, Heptane, Hexane, Pentane, Benzene, Toluene, Cyclohexane, C4, C3, C2, C1 | ES | 100 |
| 98Q2 | 1 | England | Chemical | Process Vent | Butadiene, Acrylonitrile | GS | 650 |



SEP 14 '98 14:00 FR THERMTRIX INC. SU 408 435 0452 TO 13052102200 P.01/10

TMX
Industrial Technology Solutions

# INSTALLATION LIST

| INSTALLED | UNITS | LOCATION | INDUSTRY | APPLICATION | COMPOUNDS TREATED | MODEL | SCFM |
|---|---|---|---|---|---|---|---|
| 98Q3 | 1 | Connecticut | Remediation | SVE | Carbon Tetrachloride, Chloroform, Ethyl Benzene, Trichloroethane (TCA) | MB | 2000 |
| 98Q3 | 1 | Louisiana | Chemical | Fugitive Emissions | Propylene, Propane | ES | 5 |
| 98Q4 | 1 | California | Petroleum Refining | Tank Vents | Methane, Ethane, Propane, Butate, Pentane, Hexane | ES | 100 |
| 98Q4 | 3 | California | Remediation | SVE | Trichloroethane (TCA), Dichloroethane (DCA), Dichloroethylene (DCE), Methylene Chloride, Freon 113, Benzene, Carbon Tetrachloride | GSC | 250 |
| 98Q4 | 1 | Ireland | Pharmaceutical | Process Vent | Methylene Chloride, Toluene, Ethanol, Methanol, Butane, Hexane | GRC | 18000 |
| 98Q4 | 1 | Ireland | Pharmaceutical | Process Vent | Butane, Acetone, Tiluene | GR | 18000 |
| 99Q2 | 1 | Connecticut | Pharmaceutical | Process Vent | Acetone, Dichloromethane, Ethanol, Ethyl Acetate, Methanol, Tetrahydrofuran | GSC | 5000 |

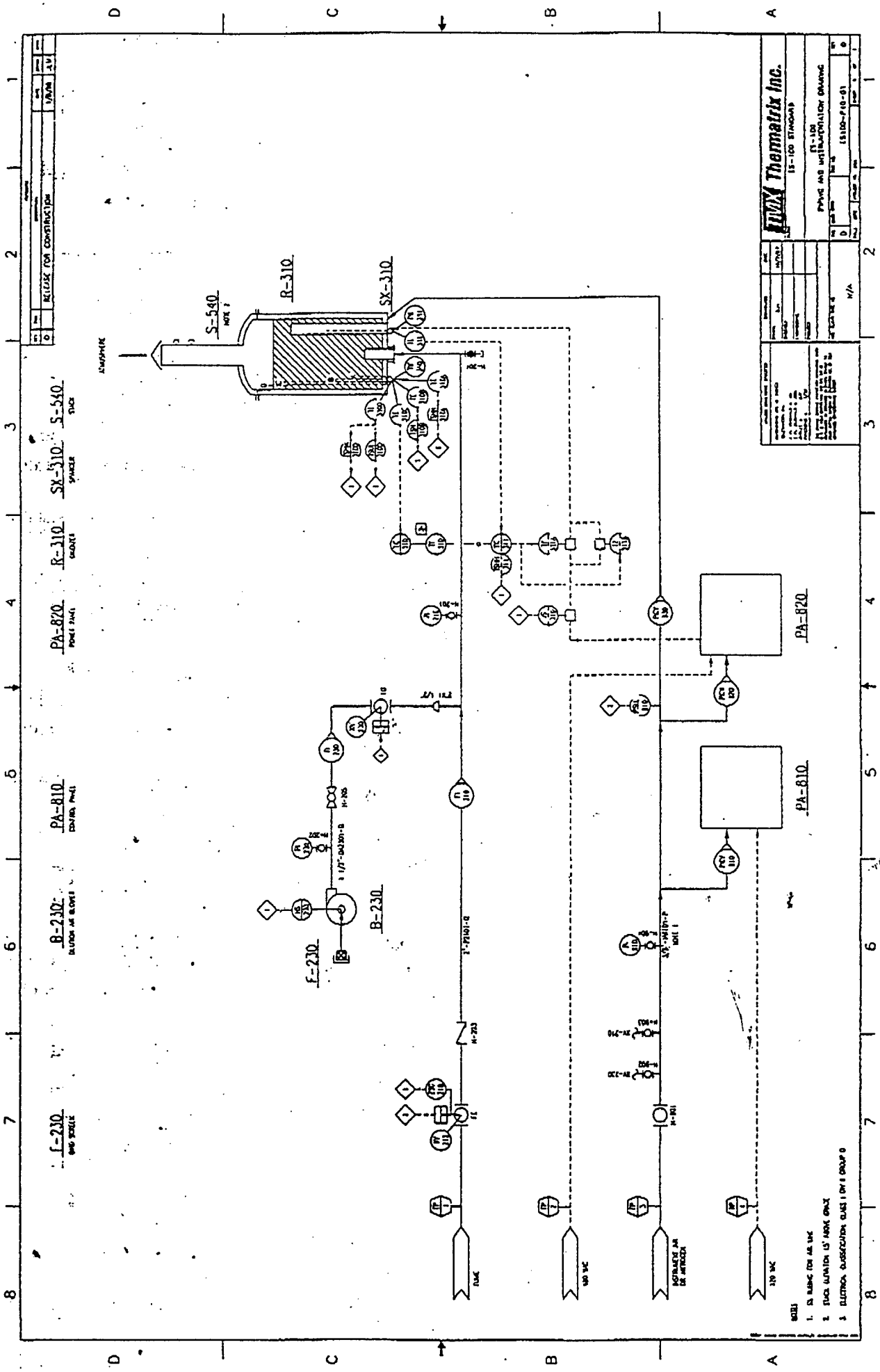
Thermatrix Inc.
IS-100 STANDARD
PIPING AND INSTRUMENTATION DRAWING
RELEASE FOR CONSTRUCTION
S-540
R-310
SX-310
PA-820
PA-810
B-230
F-230
ATMOSPHERE
NOTES
1. IS BLEEDING FOR AIR SAVE
2. STACK ELEVATION 15' ABOVE GRADE
3. ELECTRICAL CLASSIFICATION CLASS I DIV II GROUP D

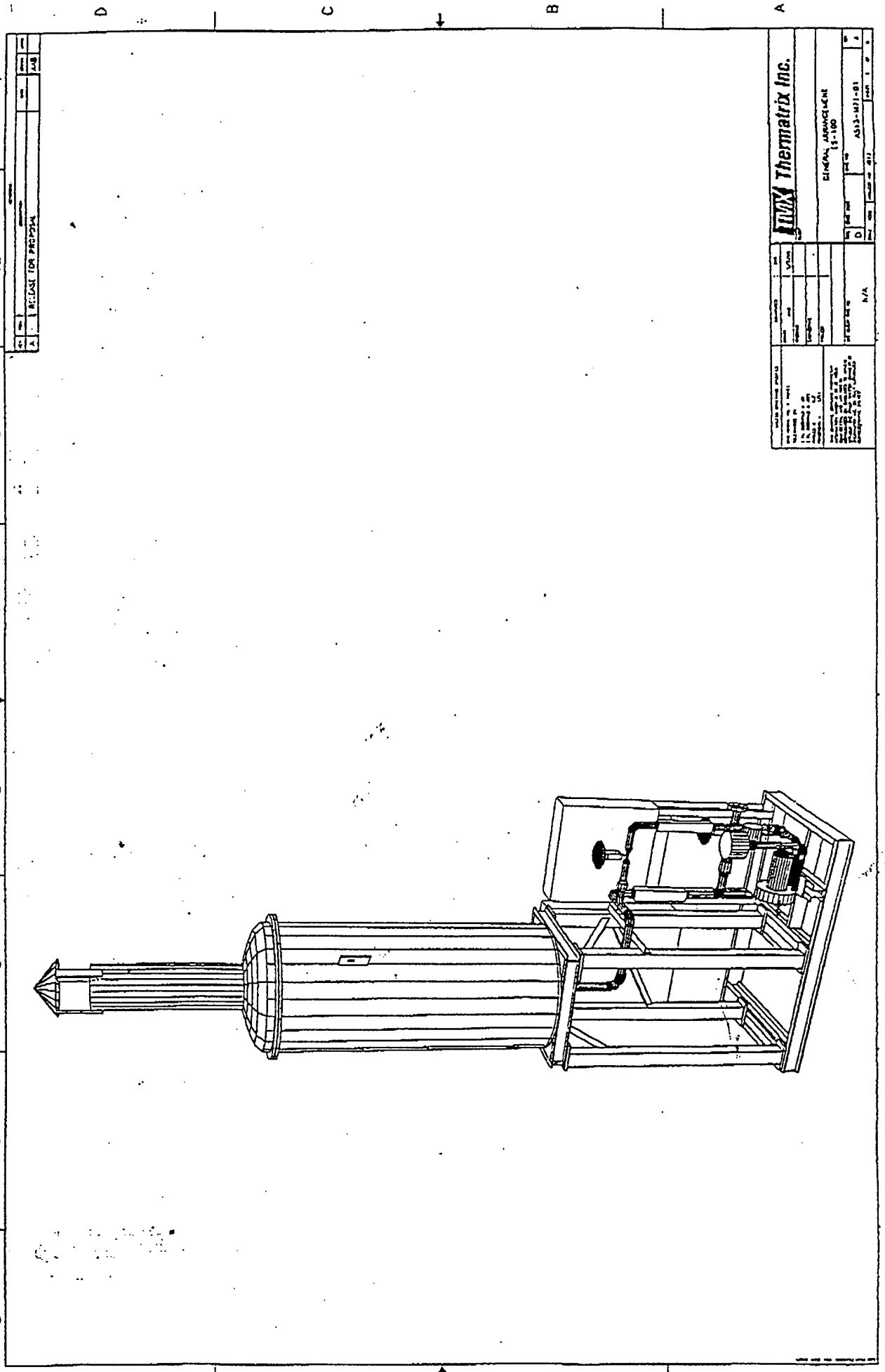
Thermatrix Inc.
GENERAL ARRANGEMENT
15-100
RELEASE FOR PROPOSAL

TMX
Industrial Technology Solutions

**Thermatrix Inc.**

308 North Peters Road, Suite 225
Knoxville Tennessee 37922
Tel: (423) 539-9603
FAX: (423) 539-9643

2025 Gateway Place, Suite 132
San Jose, California 95110
Tel: (408) 453-0490
FAX: (408) 453-0492

September 23, 1998

Mr. Tom Dragoo
Parsons Engineering Science, Inc.
1700 Broadway, Suite 900
Denver, CO 80290
PH: 303-831-8100

**VIA FAX: 303-831-8208 5 pages**

Dear Mr. Dragoo:

**SUBJECT: THERMATRIX PROPOSAL NO. 8241, Rev. 1: SVE Application**

Thank you for your interest in Thermatrix flameless thermal oxidizer (FTO) technology and for the opportunity to submit this budget proposal for treating a SVE stream. The FTO is uniquely suited for this application for a number of reasons:

- **Proven 99.99% DRE, even on chlorinated streams**
- **Stable operation even with highly variable off-gas streams**
- **Can be installed in Class I, Division 2 classified areas**
- **NOx and CO emissions well below regulatory standards**
- **FTO operation assures continuous compliance**

**Design Basis:**

The fume stream is air containing 7.4 ppmv TCE, 7 ppmv heptane, 1 ppmv DCE, 1 ppmv TCA and other trace chlorinated VOCs at a flow rate of 250 CFM.

**Scope of Supply:**

The oxidizer recommended for this application is GS model rated for 500 SCFM and $1.0 \times 10^6$ Btu.hr. The oxidizer system can be designed to operate at a total constant flowrate of 250 SCFM. The system includes the following: flameless oxidizer, preheater, control system and panel, fume train, fuel gas train, dilution air blower, stack, piping and instrumentation. Standard system specifications are attached.

**Budget Price:**

The budget price for the GS FTO system is $300,000. The price does not include taxes, spare parts, freight, handling, site preparation, foundations, installation, commissioning, startup, training or performance testing. These parts and services are available for turnkey systems.

**Performance and Guarantee:**

Thermatrix guarantees oxidizer performance at 99.99% VOC destruction or 1 ppmv total VOC in the oxidizer exhaust, whichever is least restrictive. Typical thermal $NO_X$ emissions are 2 ppmv and CO is less than 10 ppmv.

Equipment provided by Thermatrix is warranted to be free of defects in materials or workmanship for a period of 12 months from initial operation or 18 months from notice of readiness to ship.

**Delivery:**

Typical delivery of oxidizer systems, FOB point of manufacture, is 18 to 22 weeks after acceptance of a purchase order, allowing 4 to 6 weeks for development of engineering drawings and documents and 2 weeks for approval by buyer. The additional cost for expedited delivery can be provided with a firm-price quotation at the request of the buyer.

**Utility Requirements:**

Based on 8760 annual operating hours at the design conditions, the estimated operating costs for the application described above would include:

| Utility Item | Utility Use | Utility Cost |
|---|---|---|
| Supplemental Fuel | $0.50 \times 10^6$ Btu/hr | $13,000/yr |
| Electricity | 4.4 kW | $1,900/yr |
| Power consumption is based on process blower rated for 30" wc oxidation system pressure drop and 1.2 kW I&C power. Supplemental fuel cost assumed to be $3.00/million Btu. Electricity cost is assumed to be $0.05/kW-hr. | | |

**Clarifications:**

I was also asked by Bill Plain to estimate the capital and operating costs of a PADRE™ resin bed system for this application. The budgetary price for a two bed A3100 PADRE™ system is $200,000. The PADRE system can treat contaminated vapor streams up to 750 SCFM and 5 lb/hr inlet VOC loading. The estimated operating cost is $1.00/hr.

If you have any questions, please contact me at (408) 453-0490.

Sincerely,

Susan T. DesJardin

Susan T. DesJardin, P.E.
Manager, Applications Engineering

cc: Richard Scheig, Thermatrix Inc.

TMX
Industrial Technology Solutions

**Thermatrix Inc.**

**Equipment Supply Scope- GS FTO System**

| Major Equipment Supply Scope | Standard System | Optional | Provided by Buyer |
|---|---|---|---|
| Process piping from the plant to the termination points at the Thermatrix system. | | | √ |
| Dilution air blower, motor and associated equipment. | √ | | |
| Spare dilution air blower, motor and associated equipment. | | √ | |
| Fume blower, motor and associated equipment. | | √ | |
| Oxidizer vessel, preheater, refractory, thermowells, thermocouples and ceramic media. | √ | | |
| FM fuel gas train with high/low pressure switches, vents, a leak test valve, and a manual shut off valve. | √ | | |
| IRI fuel gas train with double block and bleed, high/low pressure switches, vents, a leak test valve, and a manual shut off valve. | | √ | |
| Interconnecting piping, ductwork and expansion joints. | √ | | |
| Motor starters, starter cabinets and wiring from the MCC to the oxidizer system. | | | √ |
| Motor control center. | | √ | |
| Exhaust stack with sample ports | √ | | |
| Platform for access to stack sampling ports including OSHA approved handrails and toeplates. | | √ | |

TMX
Industrial Technology Solutions

Thermatrix Inc.

**Engineering Documentation**

The engineering documents, drawings and data that will be provided for approval and for informational purposes are given in the following table.

| Item No. | Document | For Approval | | For Informational Purposes | |
|---|---|---|---|---|---|
| | | Qty | Date | Qty | Date |
| 1 | System Design Criteria Document | 3 | 4 Wks AAO | | |
| 2 | Piping and Instrument Diagram | 3 | 4 Wks AAO | | |
| 3 | Process Flow Diagram | 3 | 4 Wks AAO | | |
| 4 | General Arrangement - Plan and Elevation | 3 | 3 Wks ARAD | | |
| 5 | Electrical One-Line Drawing | 3 | 6 Wks ARAD | | |
| 6 | Foundation Load and Anchor Bolt Plan | 3 | 6 Wks ARAD | | |
| 7 | Installation, Operation & Maintenance Manual including:<br>Process Control Description<br>Recommended Spare Parts List for 1 Year with Prices<br>Equipment, Instrument, Valve, Line Schedule<br>Equipment Assembly Drawings w/BOMs<br>Instrument Data Sheets<br>Equipment Data Sheets including Performance Curves | | | 3 | At Shipment |

| | |
|---|---|
| AAO | After Acceptance of Order |
| ARAD | After Receipt of Approved Drawings |

TMX Industrial Technology Solutions

Thermatrix Inc.

**Project Scope**

Installation of the oxidizer system will be on foundations provided by the buyer. Thermatrix will provide dimensions and loadings. Installation shall include all necessary unloading, lifts and placement. Thermatrix will be responsible for the following project activities as noted below.

| Project Activities | Included in Base Price | Optional | Provided by Buyer |
|---|---|---|---|
| Participation in Process Safety Management (PSM) Process Hazards Analysis (PHA) using the HAZOP methodology. | | √ | |
| Pre-assembly of fume train and air train on skid. | √ | | |
| Pre-wiring of panels, pre-ship wiring functional check and mechanical fit-up. | √ | | |
| Wiring of mounted instruments and valves to control panels. | √ | | |
| Crating and preparation for shipment. | √ | | |
| Shipping to jobsite. | | √ | |
| Unloading and temporary storage. | | | √ |
| Site preparation including civil and foundation preparation. | | | √ |
| Mechanical and electrical installation of pre-assembled skids, oxidizer vessel and internals and dilution air blower(s) on foundations. | | √ | √ |
| Commissioning/startup assistance services. | | √ | |
| System performance testing services. | | √ | |

# VENDOR QUOTATION

# CARBON ADSORPTION SYSTEM

CC: P. Guest
S. Archibal T. Dragoo
Via fax B. Plaehn
FI 6 728414.0500
ISSER
Vendor Quot

# CARBTROL®

## ENGINEERED SYSTEMS FOR ENVIRONMENTAL CONTROL


51 RIVERSIDE AVENUE
WESTPORT, CT 06880

(203) 226-5642
(800) 242-1150
FAX: (203) 226-5322


---

TO: Pete Guest
COMPANY: PARSONS Engineering Science
REF: GAC Vapor Phase Application

FAX NUMBER: 303 831 8208
DATE: 9/2/98 STATE: CO
TOTAL PAGES: 7
TEL. NUMBER: 764 1919

---

MESSAGE:
Pete:

Re request cost estimating GAC application, job # 728414.05000 80000:

As shown in attached Carbon Usage Estimate sheets, at flow 80 cfm, carbon usage rate is estimated at 5.5 pounds per operating day and at 175 cfm, at 12 pounds per operating day.

Recommended Units:

80 cfm flow rate: Two (2) G-1 Canisters in series. Unit contains 200 pounds vapor phase activated carbon and is designed for flows to 100 cfm. Bed life before replacement - about 36 operating days. The G-1 is available @ $595.00, fob our Houston TX warehouse. Contaminants will not meet our spent canister "takeback" profile so you would arrange for disposal yourself and purchase a new replacement canister @ $595.00 as needed.

175 cfm flow rate:
a.) Two (2) G-2 Canisters in series. Unit contains 170 pounds vapor phase carbon and designed for flows to 300 cfm. Bed life before replacement will be about 14 operating days. Disposal and repurchase as above. The G-2 unit is available @ $785.00. fob Houston, TX

b) G-4 Adsorber containing 1000 pounds vapor phase activated carbon. Application can get by with single unit but staging them will provide better control and less frequent monitoring. Bed life of the unit before changeout of spent carbon required - about 83 operating days. The G-4 Adsorber is priced @ $4,400.00, fob Bridgeport, CT. At changeout time, spent carbon would be vacuumed from the unit into drums, shipped to reactivation site in Pittsburgh PA area and reloaded with custom reactivated carbon. Reactivation cost is $1.15/pound. All shipping to and from the site is for user account.

Let me know if any questions or if more details needed at this time. Have attached descriptive information on the g canisters and adsorber.

Sincerely

Charlie O'Rourke

x 3021

FROM: C.E. O'Rourke

CARBTROL

---


Sep. 2. 1998 10:45AM CARBTROL CORPORATION No. 1399 P. 1/7

PROJECT:

FLOW IN CFM: 80.00
FLOW IN CFD: 115200.00

PERFORMANCE:

| CONTAMINANT | CONC(ppmv) | #CONT /DAY | #CARBON /DAY | #CONT /100,000cf | #CARBON /100,000cf |
|---|---|---|---|---|---|
| Vinyl Chloride | 0.089 | 0.00 | 0.42 | 0.00 | 0.37 |
| 1,1-Dichloroethylene | 0.18 | 0.01 | 0.20 | 0.00 | 0.17 |
| Methylene Chloride | 0.12 | 0.00 | 0.60 | 0.00 | 0.52 |
| cis-1,2-Dichloroethylene | 0.913 | 0.03 | 0.65 | 0.02 | 0.56 |
| 1,1,1-Trichloroethane | 0.68 | 0.03 | 0.13 | 0.02 | 0.12 |
| Tetrachloroethylene | 0.2 | 0.01 | 0.04 | 0.01 | 0.03 |
| Trichloroethylene | 7.43 | 0.29 | 1.35 | 0.25 | 1.17 |
| THC as Heptane | 6.97 | 0.31 | 2.06 | 0.18 | 1.79 |
| | | 0.58 | 5.45 | | |
| TOTALS | 16.582 | | | | |

Calculation based on CARBTROL CSV carbon having a Carbon Tetrachloride number of: 70.00

Carbon usage rate @ 80 CFM – 5.5 # / operating day

Copyright© 1994 - 1996 CARBTROL Corporation

CARBTROL® Corporation



PROJECT:

FLOW IN CFM: 175.00
FLOW IN CFD: 252000.00

PERFORMANCE:

| CONTAMINANT | CONC(ppmv) | #CONT /DAY | #CARBON /DAY | #CONT /100,000cf | #CARBON /100,000cf |
|---|---|---|---|---|---|
| Vinyl Chloride | 0.089 | 0.00 | 0.93 | 0.00 | 0.37 |
| 1,1-Dichloroethylene | 0.18 | 0.01 | 0.43 | 0.00 | 0.17 |
| Methylene Chloride | 0.12 | 0.01 | 1.30 | 0.00 | 0.52 |
| cis-1,2-Dichloroethylene | 0.913 | 0.06 | 1.41 | 0.02 | 0.56 |
| 1,1,1-Trichloroethane | 0.68 | 0.06 | 0.29 | 0.02 | 0.12 |
| Tetrachloroethylene | 0.2 | 0.02 | 0.08 | 0.01 | 0.03 |
| Trichloroethylene | 7.43 | 0.63 | 2.95 | 0.25 | 1.17 |
| THC as Heptane | 6.97 | 0.45 | 4.50 | 0.18 | 1.79 |
| TOTALS | 16.582 | 1.24 | 11.89 | | |

Calculation based on CARBTROL CSV carbon having a Carbon Tetrachloride number of: 70.00

Carbon usage rate @ 175 CFM – 12 # / operating day

Copyright© 1994 - 1996 CARBTROL Corporation

# CARBTROL®

# AIR PURIFICATION CANISTERS 140-200 LB. ACTIVATED CARBON

**G-1**
**G-2**
**G-3**

The CARBTROL "G" Canisters handles flows up to 500 CFM.

## FEATURES

- High activity carbon.
- Epoxy lined steel or polyethylene construction.
- Acceptable for transport of hazardous spent carbon.
- Side drain for removal of accumulated condensate.
- Low pressure drop.
- PVC internal piping.
- High temperature (180°F) steel units available.

## APPLICATIONS

- Soil vapor remediation
- Air stripper exhausts
- Tank vents
- Exhaust hoods
- Work area purification
- Sewage plant odor control

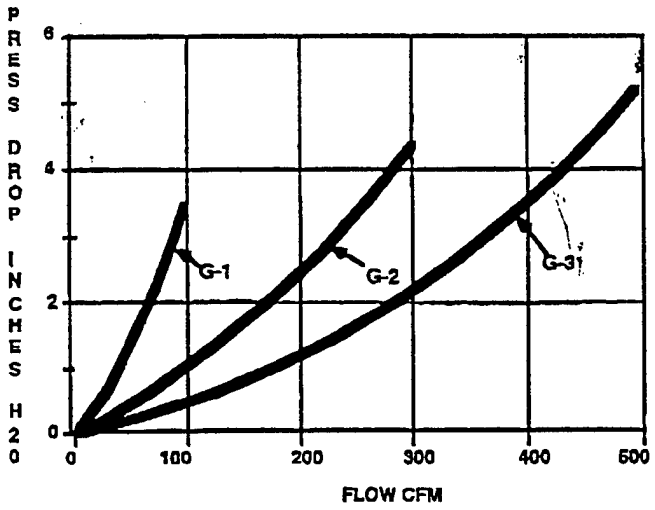



**CARBTROL®**
CORPORATION

51 Riverside Avenue, Westport, CT 06880 • 1-800-242-1150 • (203) 226-5642



© Copyright 1991 Carbtrol Corporation - 11/15/96





Sep. 2. 1998 10:46AM CARBTROL CORPORATION No. 1399 P. 4/7

# CARBTROL®

## AIR PURIFICATION CANISTERS 140-200 LB. ACTIVATED CARBON

G-1
G-2
G-3

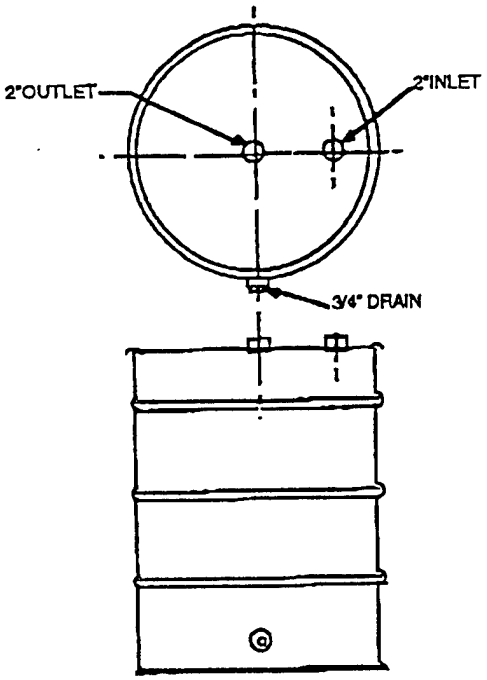


MODEL G-1

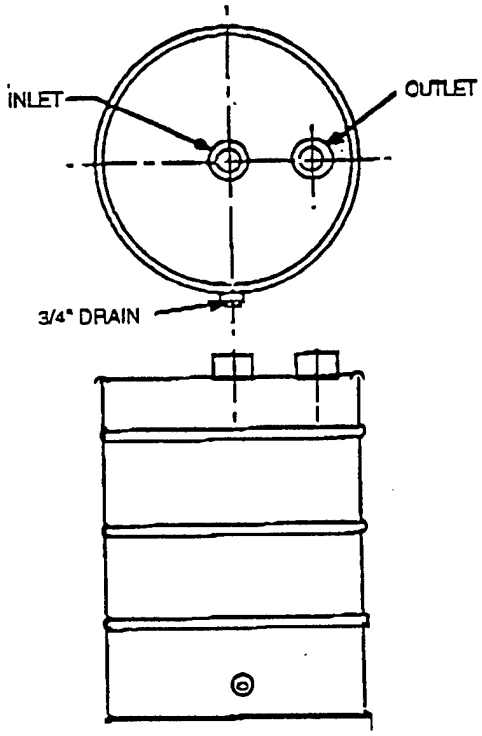


MODEL G-2,G-3

## SPECIFICATIONS

| MODEL | DIAMETER/HEIGHT | CARBON WEIGHT | INLET/OUTLET | MAX. RATED FLOW | APPROX. SHIP WT. |
|---|---|---|---|---|---|
| G-1* | 24"/36" | 200 lbs. | 2"/2" | 100 CFM | 240 lbs. |
| G-2* | 24"/36" | 170 lbs. | 4"/4" | 300 CFM | 210 lbs. |
| G-3P | 24"/36" | 140 lbs. | 6"/6" | 500 CFM | 180 lbs. |
| G-3S | 24"/34" | 140 lbs. | 4"/4" | 500 CFM | 180 lbs. |

* Specify: Polyethylene (P) or Epoxy Lined Steel (S)

CARBTROL® CORPORATION
51 Riverside Avenue, Westport, CT 06880 • 1-800-242-1150 • (203) 226-5642



Sep. 2. 1998 10:46AM CARBTROL CORPORATION No. 1399 P. 5/7

# CARBTROL®

## AIR PURIFICATION ADSORBERS

## 1,000 - 3,000 LB. ACTIVATED CARBON

**MODELS**
**G-4**
**G-6**
**G-9**

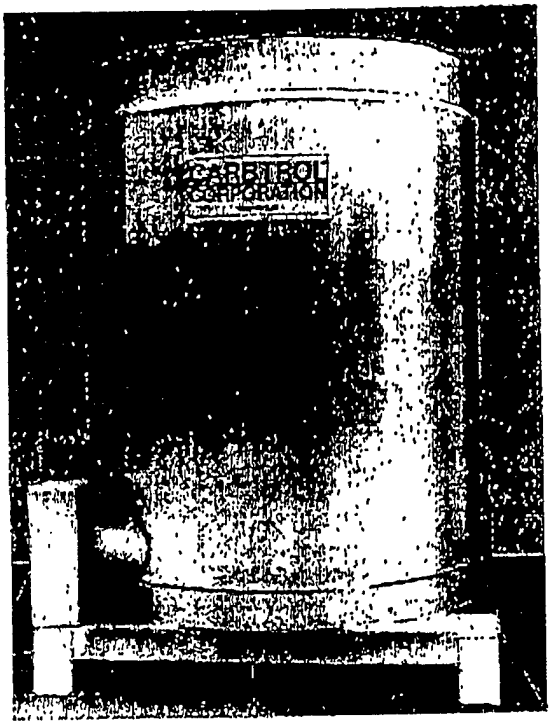


## FEATURES

- Low pressure drop.
- Epoxy lined mild steel construction.
- High activity carbon.
- Fork lift fittings for easy handling.
- 4"Ø slotted inlet distributor.
- Acceptable for transport of hazardous spent carbon.

## OPTIONS

- Plastisol (PVC) lining.
- Interconnecting piping.

## SPECIFICATIONS

**MODEL G-4**

| | |
|---|---|
| CARBON: | 1,000 lbs. |
| DIMENSIONS: | 45-1/2" Ø x 64" H |
| SHIPPING WT: | 1,500 lbs. Dry |

**MODEL G-6**

| | |
|---|---|
| CARBON: | 1,800 lbs. * |
| DIMENSIONS: | 45-1/2" Ø x 88" H |
| SHIPPING WT: | 2,500 lbs. Dry |

**MODEL G-9**

| | |
|---|---|
| CARBON: | 3,000 lbs. * |
| DIMENSIONS: | 60" Ø x 93" H |
| SHIPPING WT: | 3,500 lbs. Dry |

* 2,000 lbs. option available

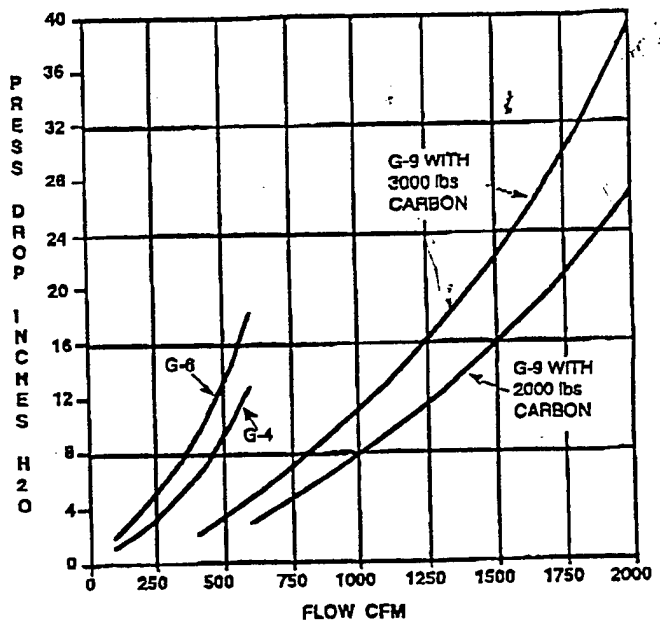


**CARBTROL®**
CORPORATION

51 Riverside Avenue, Westport, CT 06880 • 1-800-242-1150 • (203) 226-5642

© Copyright 1991 Carbtrol Corporation - 11/15/96



Sep. 2. 1998 10:46AM CARBTROL CORPORATION No. 1399 P. 6/7

# CARBTROL®

## AIR PURIFICATION ADSORBERS

### 1,000 - 3,000 LB. ACTIVATED CARBON

**MODELS**
G-4
G-6
G-9

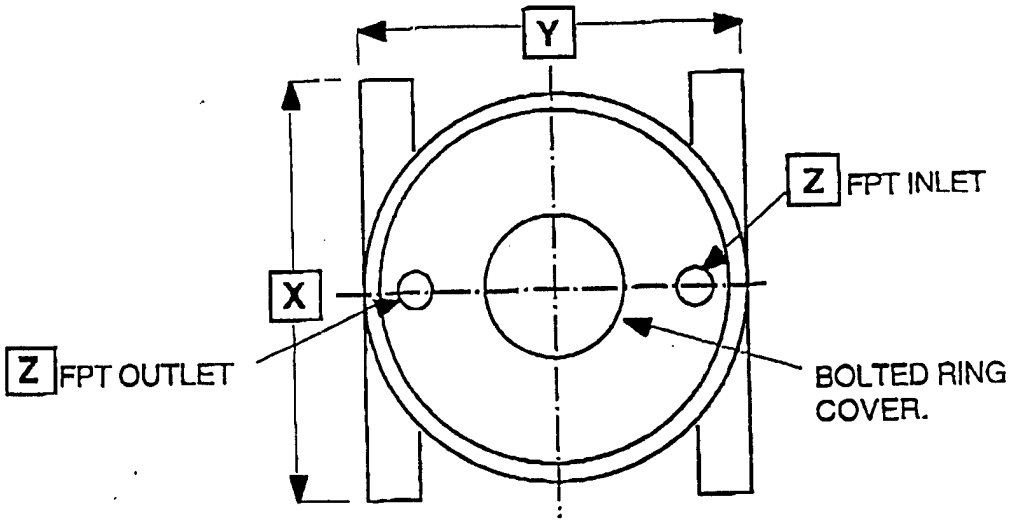


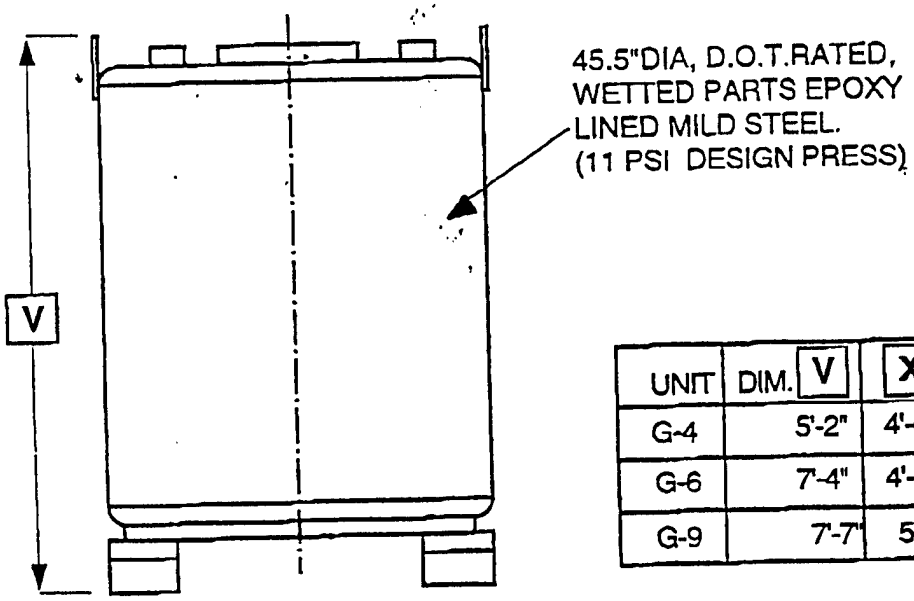


| UNIT | DIM. V | X | Y | Z |
|---|---|---|---|---|
| G-4 | 5'-2" | 4'-0" | 3'-8" | 4" |
| G-6 | 7'-4" | 4'-0" | 3'-8" | 4" |
| G-9 | 7'-7" | 5'-0" | 5'-0" | 10" |


CARBTROL® CORPORATION
51 Riverside Avenue, Westport, CT 06880 • 1-800-242-1150 • (203) 226-5642





Sep. 2. 1998 10:47AM CARBTROL CORPORATION No. 1399 P. 7/7

# GRANULAR ACTIVATED CARBON FOR TREATMENT OF VOC EMISSIONS

CARBTROL® Corporation
February 1992
Rev. 10/92

- Temperature

Vapor phase adsorption capacity is know to vary inversely with the temperature of the contaminated gas stream. The influence of temperature is established for a specific activated carbon by comparison of a series of adsorption isotherms developed over the proposed operating temperature range. The attached Figure 2 presents Trichloroethylene adsorption isotherms developed over the temperature range of 40 to 140°F. At the 100 ppmv gas concentration level, the adsorption capacity of Trichloroethylene is reduced by about 1/3 when moving from 40°F to 80°F. Of note is the fact that adsorption temperature effects are more significant at lower contaminant concentrations.

In vapor phase adsorption applications, temperature effects must be considered where gas temperatures would present undue influence on the adsorption process. In such a case, use of an air to air heat exchanger may be necessary for controlling the gas temperature.

- Humidity

System humidity has been shown to have a negative effect upon adsorption at relative humidity levels above 40%. This is particularly true for low concentration gas streams and relative humidity levels approaching 100%. As the relative humidity of a gas stream approaches 100%, the activated carbon pores become saturated with water. Adsorption that occurs under saturated conditions is consistent with carbon capacities indicative of aqueous phase adsorption. Figure 3 presents the effect of relative humidity on Trichloroethylene adsorption at three gas concentration levels. At the 100 ppmv level, the adsorption capacity for Trichloroethylene is reduced approximately 80% as the system humidity increases from 40 to 90%.

SEE FIG. #3 ATTACHED

In many VOC control applications, the discharge gas contains high levels of humidity resulting from the process in which it is generated. Under these conditions, the relative humidity must be reduced to below 40% to obtain optimum adsorption capacity. This can often be accomplished by increasing the temperature of the gas stream by 20°F.

FIGURE #3

EFFECT OF HUMIDITY ON GAC ADSORPTION

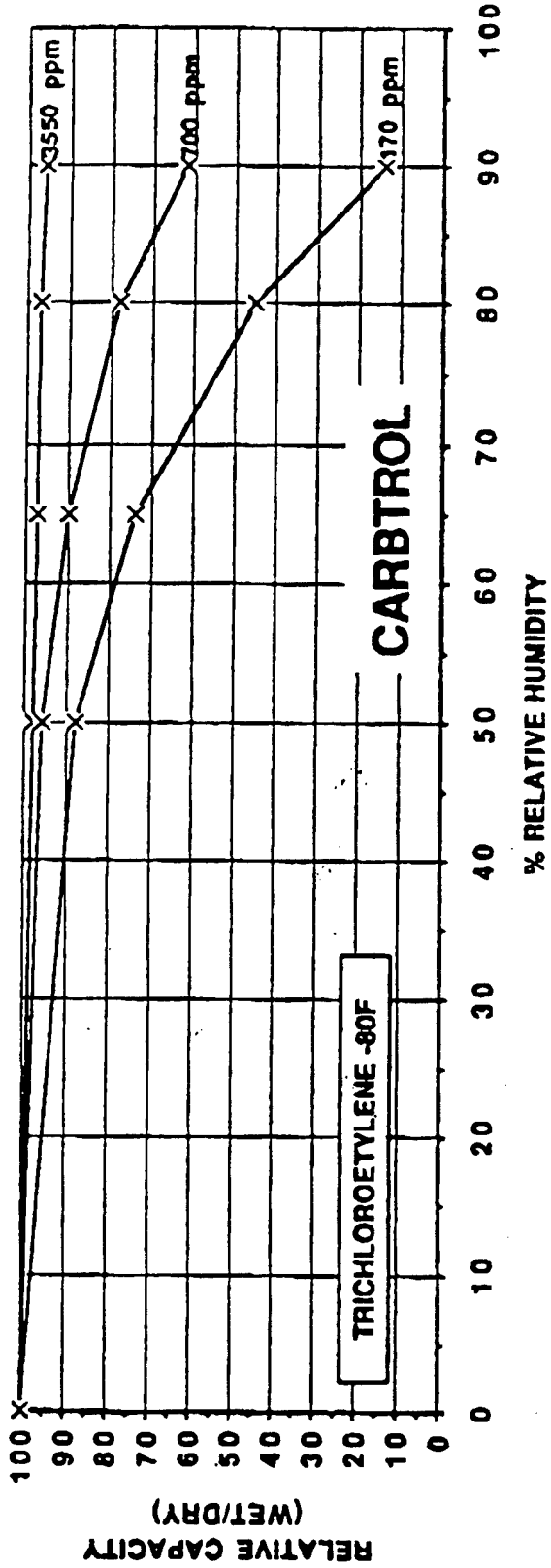


THIS DRAWING CONTAINS PROPRIETARY INFORMATION WHICH IS FOR THE SOLE USE OF THE CUSTOMER AND REMAINS THE PROPERTY OF CARBTROL CORP.

PARSONS ES

# MEMORANDUM TO FILE

JOB NO.: 728414.05000

FILE DESIGNATION:

DATE 9.18.98 TIME: 0630

PHONE CALL FROM: CHARLIE O'ROURKE ~~PHONE NO.:~~ LEFT MESSAGE

PHONE CALL TO: BILL PLAENN CARBTROL PHONE NO.:

CONFERENCE WITH: —

PLACE: —

SUBJECT: VARIABLES FOR CARBON USAGE ESTIMATES

1. ASSUMED:
   RELATIVE HUMIDITY = 50%
   TEMPERATURE = 75°F

SIGNED: WAP

ES-1-5

# CARBTROL®

## ENGINEERED SYSTEMS FOR ENVIRONMENTAL CONTROL

51 RIVERSIDE AVENUE
WESTPORT, CT 06880

FAX: (203) 221-8639, X3002
(203) 226-5322

| | | | |
|---|---|---|---|
| TO: | Mr. Tom Dragou | FAX NUMBER: | 303-831-8208 |
| COMPANY: | Parsons Engineering Science | DATE: | 9/18/98 |
| REF: | Job #728414.05000.80000 | TOTAL PAGES: | 7 |

MESSAGE: As a result of your inquiry, I am faxing you the attached Vapor Phase Carbon Usage Estimate and product information regarding our G-4 Adsorber.

At a flow of 250 cfm, the carbon usage rate is estimated at 14 pounds per day. A G-4 Adsorber will have a bed life of approximately 71 days. We recommend two units in series for protection against breakthrough and monitoring between the units.

The following options are recommended:

- The G-4 Adsorber price is $4,400.00. Two or more Adsorbers comes under a quantity discount of 9% for a unit price of $4,004.00 each and a total price of $8,008.00.

- For a short term project, leasing is recommended. A G-4 lease price is $1,700.00 down payment and $295.00 rental fee per month. For two units the total lease price is $2,400.00 down payment and $590.00 rental fee per month.

Feel free to call me if you have any questions or you need further assistance.

Regards,

FROM: Sharon Papcin

CARBTROL

Enclosures: AT 411/1, SP 411/414, Terms and Lease Terms

# VAPOR PHASE CAR USAGE ESTIMATE
CARBTROL® Corporation



PROJECT: Parsons Engineering

FLOW IN CFM: 250.00
FLOW IN CFD: 360000.00

PERFORMANCE:

| CONTAMINANT | CONC(ppmv) | #CONT /DAY | #CARBON /DAY | #CONT /100,000cf | #CARBON /100,000cf |
|---|---|---|---|---|---|
| Vinyl Chloride | 0.089 | 0.01 | 0.03 | 0.00 | 0.01 |
| 1,1-Dichloroethylene | 0.18 | 0.02 | 0.67 | 0.00 | 0.19 |
| Methylene Chloride | 0.12 | 0.01 | 2.01 | 0.00 | 0.56 |
| cis-1,2-Dichloroethylene | 0.913 | 0.08 | 2.18 | 0.02 | 0.60 |
| 1,1,1-Trichloroethane | 0.68 | 0.08 | 0.45 | 0.02 | 0.12 |
| Tetrachloroethylene | 0.2 | 0.03 | 0.12 | 0.01 | 0.03 |
| Trichloroethylene | 7.43 | 0.90 | 4.53 | 0.25 | 1.26 |
| THC as Heptane | 6.97 | 0.64 | 3.78 | 0.18 | 1.05 |
| TOTALS | 16.582 | 1.76 | 13.76 | 0.49 | 3.82 |

Calculation based on CARBTROL CSV carbon having a Carbon Tetrachloride number of: 65.00

Copyright© 1994 - 1996 CARBTROL Corporation

# CARBTROL®

## AIR PURIFICATION ADSORBERS

## 1,000 - 3,000 LB. ACTIVATED CARBON

**MODELS**
**G-4**
**G-6**
**G-9**

### FEATURES

- Low pressure drop.
- Epoxy lined mild steel construction.
- High activity carbon.
- Fork lift fittings for easy handling.
- 4"Ø slotted inlet distributor.
- Acceptable for transport of hazardous spent carbon.

### OPTIONS

- Plastisol (PVC) lining.
- Interconnecting piping.

### SPECIFICATIONS

**MODEL G-4**

| | |
|---|---|
| CARBON: | 1,000 lbs. |
| DIMENSIONS: | 45-1/2" Ø x 64" H |
| SHIPPING WT: | 1,500 lbs. Dry |

**MODEL G-6**

| | |
|---|---|
| CARBON: | 1,800 lbs. * |
| DIMENSIONS: | 45-1/2" Ø x 88" H |
| SHIPPING WT: | 2,500 lbs. Dry |

**MODEL G-9**

| | |
|---|---|
| CARBON: | 3,000 lbs. * |
| DIMENSIONS: | 60" Ø x 93" H |
| SHIPPING WT: | 3,500 lbs. Dry |

* 2,000 lbs. option available

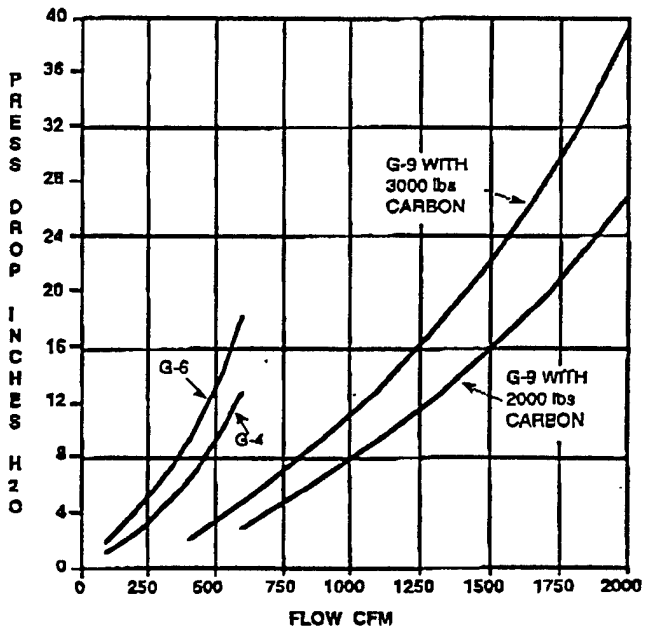


**CARBTROL®**
CORPORATION

51 Riverside Avenue, Westport, CT 06880 • 1-800-242-1150 • (203) 226-5642

© Copyright 1991 Carbtrol Corporation - 11/15/96



Sep. 18. 1998 11:21AM CARBTROL CORPORATION No. 2233 P. 3/7

# CARBTROL®

## AIR PURIFICATION ADSORBERS

### 1,000 - 3,000 LB. ACTIVATED CARBON

**MODELS**
**G-4**
**G-6**
**G-9**

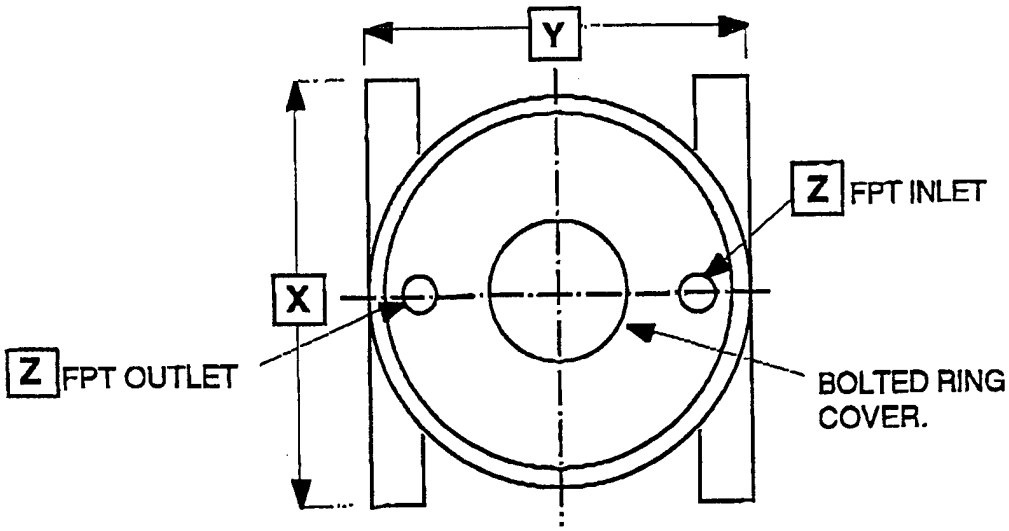


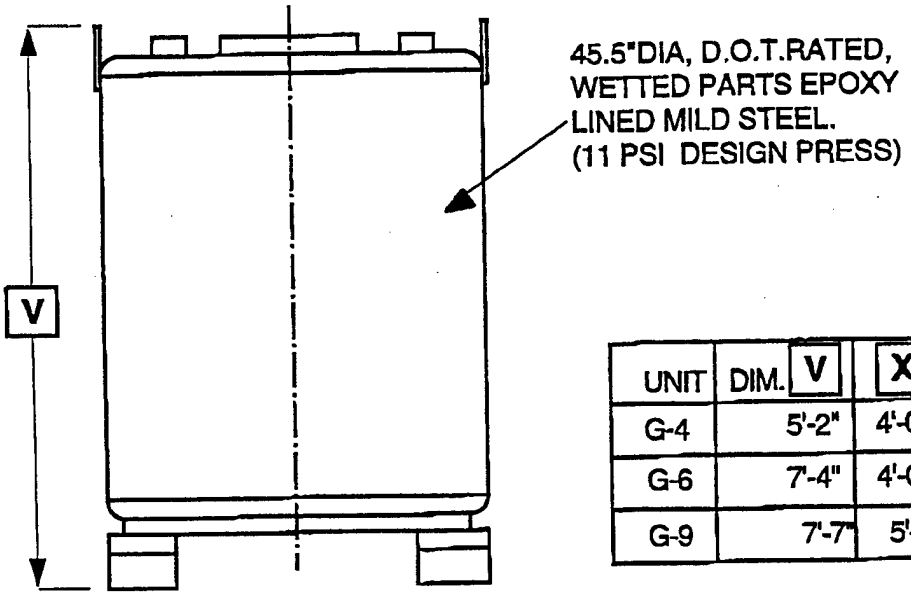


| UNIT | DIM. V | X | Y | Z |
|---|---|---|---|---|
| G-4 | 5'-2" | 4'-0" | 3'-8" | 4" |
| G-6 | 7'-4" | 4'-0" | 3'-8" | 4" |
| G-9 | 7'-7" | 5'-0" | 5'-0" | 10" |


CARBTROL® CORPORATION
51 Riverside Avenue, Westport, CT 06880 • 1-800-242-1150 • (203) 226-5642





Sep. 18. 1998 11:21AM CARBTROL CORPORATION No. 2233 P. 4/7

CARBTROL®
CORPORATION

SPECIFICATION

# ACTIVATED CARBON ADSORBER
# VAPOR PHASE

| | | |
|---|---|---|
| Model: | G-4 | G-6 |
| Maximum Flow (CFM): | 600 | |
| Design Features: | | |
| Pressure Drop at Max. Flow (in. w.c.): | 12.7 | 18.6 |
| Carbon: | Vapor phase, coconut base, activated carbon, 4 X 8 mesh, CCl4 No. : >60. | |
| Carbon Weight (lbs.): | 1000 | 1800*<br>* 2000 lbs. option avail. |
| Adsorber: | Mild steel shell with epoxy internal coating, PVC internal piping, forklift base, DOT rated. Acceptable for transport of hazardous waste. | |
| Max. Recommended Operating Pressure (psi): | 9 psi | |
| Dimensions: | | |
| Diameter: | 45-1/2" | 45-1/2" |
| Overall Height: | 64" | 88" |
| Connections: | | |
| Inlet: | 4" FPT top | |
| Outlet: | 4" FPT top | |
| Drain: | 3/4" FPT bottom | |
| Shipping Weight (lbs.): | 1500 | 2500 |
| Availability: | From stock | |
| Drawing Number: | S-1549 | S-1640 |

5/8/96
*SP-411,414

# LEASE
## TERMS AND CONDITIONS

**Lease period:**

(a) Lease period shall commence on the date of delivery of the Equipment and shall end when the equipment is returned back to CARBTROL.

(b) Minimum lease period is ___ month/s.

**Lessee shall:**

(a) inspect the Equipment within 48 hours of delivery and promptly notify CARBTROL of any defect. If no such notification is given, the Equipment will be conclusively presumed to be in good working order.

(b) use the Equipment in a careful manner and in compliance with all laws, ordinances and regulation in anyway pertaining to the possession, use or maintenance of the Equipment.

(c) not make any alterations to the Equipment without CARBTROL approval.

(d) keep the Equipment in good working order at its own expense.

(e) carry insurance on the Equipment against all risk of loss and damage and shall carry public liability, contractual liability and property damage insurance covering the operation and use of the Equipment.

(f) keep the Equipment free and clear of all levies, liens and encumbrances.

(g) indemnify the Lessor against, and shall hold the Lessor harmless from, any and all claims, actions, proceedings, costs, expenses, damages and liabilities, including attorney's fees, arising out of, connected with, or resulting from Lessee's rental and use of the Equipment, including, without limiting the generality of the foregoing, the selection, delivery, possession, use, operation and return of the Equipment.

(h) recognize the Equipment as a unique product designed by Lessor and not duplicate the Equipment or use any of its unique features in any other product.

(i) return the Equipment at the end of the lease period in good working order and free of hazardous waste contamination.

(j) pay freight from CARBTROL warehouse to site and return.

(k) pay 1.5% interest per month on all delinquent invoices as allowed by law.

**CARBTROL - the Lessor:**

(a) has no obligation with respect to the Equipment, its operation or maintenance, except to replace or repair equipment upon notice in accord with paragraph (a) above.

(b) shall not be liable for any loss or damage whatsoever incurred as a result of delay, or failure to furnish Equipment for reasons beyond Lessors control. Lessor shall not be liable for any damages by reason of failure of the Equipment to operate or of faulty operation of the equipment. Lessor shall not be liable for any direct or consequential damages or losses resulting from the installation, operation or use of the Equipment and related materials furnished hereunder.

(c) shall have the right to inspect the Equipment.

(d) MAKES NO EXPRESS OR IMPLIED WARRANTIES AS TO ANY MATTER WHATSOEVER INCLUDING, WITHOUT LIMITATION, THE CONDITION OF THE EQUIPMENT, ITS MERCHANTABILITY OR ITS FITNESS FOR ANY PARTICULAR PURPOSE. No defect in or unfitness of, the Equipment shall relieve the Lessee of the obligation to pay rent or any other obligation under this lease.

(e) assumes no responsibility for claims that the Equipment infringes on rights or patents of others.

4/1/95/dw

# TERMS & CONDITIONS

1. PROPOSAL. CARBTROL's purpose is to furnish the Customer the equipment as covered by this proposal and specifications at the prices stated herein.

Prices are firm for shipment within six (6) months of the order date if the order is placed within 60 days.

For shipments made more than six (6) months from the date of the order, pricing will be that in effect at time of shipment. (If shipment is delayed for reasons under control of CARBTROL, then the price shall remain firm).

All the information in the proposal is confidential and has been prepared for Customer use solely in considering the purchase of the equipment described. Transmission of all or any part of this information to others by Customer for other purposes is unauthorized without CARBTROL's written consent.

2. TERMS OF PAYMENT. Net payment within 30 days from invoice date subject to credit approval by CARBTROL. CARBTROL reserves the right to invoice on finished goods if customer holds delivery beyond scheduled shipping date. CARBTROL reserves the right to invoice on partial shipments. All overdue amounts of the purchase price shall bear interest at the rate of 1 1/2% per month. If payment remains delinquent in excess of 60 days, CARBTROL reserves the right to utilize an Independent Collection Agent to secure payment. In such case, Purchaser shall pay the balance due, plus 25% added for the collection fee.

3. SHIPMENT. F.O.B. plant as per CARBTROL's proposal suitable for domestic shipment, unless otherwise specified. Shipping dates given therein are approximate only and subject to confirmation at time of order. Furthermore, dates are computed from time of receipt at CARBTROL Office, all details pertaining to the order which are essential to its proper execution.

4. WARRANTY. All equipment manufactured by CARBTROL is warranted to be free from defects in material and workmanship for a period of 18 months from the date of shipment or 12 months from the date of start up, whichever comes first. CARBTROL will repair or replace any part or parts during the warranty period free of charge, F.O.B. factory, provided our examinations shows the equipment to be truly defective when used for the purpose intended. The obligation of CARBTROL is limited solely to repair not to exceed the cost of the defective equipment considered on a unit basis, or replacement of said equipment. This obligation shall be conditioned upon prompt written notice being given to CARBTROL. CARBTROL MAKES NO WARRANTY AS TO FITNESS OF ITS PRODUCTS FOR SPECIFIC APPLICATIONS BY THE BUYER OR AS TO PERIOD OF SERVICE UNLESS CARBTROL SPECIFICALLY AGREES OTHERWISE IN WRITING AFTER THE PROPOSED USAGE HAS BEEN MADE KNOWN. The foregoing warranty is exclusive and in lieu of all other warranties expressed or implied, including but not limited to any warranty of merchantability or of fitness for a particular purpose. Commodities not manufactured by CARBTROL are warranted or guaranteed to the extent and in the manner they may be warranted or guaranteed to CARBTROL by the manufacturer thereof, and to the extent such warranty or guarantee may reasonably be enforced without litigation by CARBTROL.

5. LIMITATION OF LIABILITY. In no event, as a result of breach of contract, warranty or negligence, shall CARBTROL be liable for special or consequential damages including but not limited to loss of profits or revenues, loss of any equipment, cost of capital, cost of substitute equipment, facilities or services, downtime costs or claims of purchasers of the Customer for such damages. Further, CARBTROL will not be liable for any delay in the performance of contracts and orders, or in the shipment and delivery of goods, or for any damage suffered by the liable for any delay in the performance of contracts and orders, or in the shipment and delivery of goods, or for any damage suffered by the Customer by reason of delay, when such delay is, directly or indirectly, caused by or in any manner arises from fires, floods, accidents, riots, war, Government interference, priorities, embargoes, strikes, shortage of labor, fuel, materials or supplies, inadequate transportation facilities or any other cause or causes whether or not similar in nature to any of those hereinbefore specified beyond CARBTROL's control.

6. SERVICE. Where service in the nature of installation, demonstration or repair of any equipment beyond that specifically included in the quoted price, CARBTROL will render such services at its normal charges plus overtime and living and traveling expenses for a mechanic and/or engineer.

7. PERFORMANCE. When performance of CARBTROL's equipment is based on data furnished by Customer, it should be understood that CARBTROL's performance figures are estimated only, based on the reliable engineering practice. The actual performance obtained by Customer may be influenced by any changes in conditions prevailing in Customer's plant or site.

8. PATENTS. CARBTROL assumes no responsibility for any claims that said equipment infringes on rights of patents of others.

9. CLAIMS. Claims for loss or damage in transit are the responsibility of the consignee; however, CARBTROL will lend assistance. Any claims for shortages not covered by the freight carrier, must be made within ten (10) days from date of delivery, in order to receive consideration.

10. STORAGE FEES. A storage fee will be charged for finished goods if Customer holds delivery beyond scheduled shipping date. After a seven (7) day grace period, Customer will be charged a monthly storage rate of $200 per $10,000 of purchase price.

11. FREIGHT HANDLING CHARGE - A 30% handling charge is added to all freight bills that we pay for our customers. The handling charge covers administration costs associated with paying the freight bill as well as the value of money regarding the time of payment of the freight bill versus customer's payment of our invoice. ICC Federal Regulations require us to pay freight bills within 15 days. The handling charge does not apply to outbound shipments that are sent "Freight Collect".

12. CANCELLATION. Any orders placed for equipment and commodities as offered in this proposal shall not be subject to cancellation except with CARBTROL's consent, and then only upon the following conditions:

Standard Equipment - (Defined as catalogued equipment ordinarily carried in stock.) When cancellation is accepted, CARBTROL reserves the right to make a cancellation charge up to 25% of the purchase price.

Special Equipment - (Defined as equipment manufactured for special requirements and not stocked as standard product.) Cancellation will be accepted upon payment of a percentage of the total special equipment price equal to the percentage of the total work completed.

13. TAXES. Our proposal does not include Federal, State or Local Sales, Privilege, Use or other taxes of any kind applicable to the sale of the equipment involved. Unless otherwise specified, these taxes shall be paid by the Customer or, in lieu thereof, the Customer shall provide CARBTROL with a tax exemption certificate acceptable to the proper taxing authority.

14. OTHER. This agreement shall be construed in accordance with the laws of the State of Connecticut. These Terms and Conditions are the only terms and conditions that will be binding upon the parties unless additional terms are set forth in writing and agreed to between the parties in writing.

T/C - 4/15/97