FINAL
SITE-SPECIFIC TECHNICAL REPORT FOR THE EVALUATION OF THERMATRIX GS SERIES FLAMELESS THERMAL OXIDZER FOR OFF-GAS TREATMENT OF TRICHLOROETHENE VAPORS AT BUILDING 181 AIR FORCE PLANT 4, TEXAS

FEBRUARY 1998

Distribution is unlimited; approved for public release

AIR FORCE CENTER FOR ENVIRONMENTAL EXCELLENCE (AFCEE)
TECHNOLOGY TRANSFER DIVISION

DTIC QUALITY INSPECTED 4

20001004 047

FINAL
SITE-SPECIFIC TECHNICAL REPORT
FOR THE EVALUATION OF THERMATRIX GS SERIES FLAMELESS THERMAL OXIDIZER FOR OFF-GAS TREATMENT OF TRICHLOROETHENE VAPORS AT BUILDING 181
AIR FORCE PLANT 4, TEXAS

February 1998

by

Steven R. Archabal, Douglas C. Downey, Peter R. Guest, and Mark J. Vessely,

PARSONS ENGINEERING SCIENCE, INC.

DENVER, COLORADO

for

US AIR FORCE

CENTER FOR ENVIRONMENTAL EXCELLENCE

TECHNOLOGY TRANSFER DIVISION

BROOKS AIR FORCE BASE, TEXAS

This document was prepared for the United States Government by Parsons Engineering Science, Inc. In no event shall either the United States Government or Parsons Engineering Science, Inc. have any responsibility or liability for any consequences of any use, misuse, inability to use, or reliance upon the information contained herein, nor does either warrant or otherwise represent in any way the accuracy, adequacy, or applicability of the contents hereof.

PREFACE

Parsons Engineering Science, Inc. (Parsons ES) was contracted by the Air Force Center for Environmental Excellence (AFCEE) Technology Transfer Division (ERT) to perform a technology demonstration of the Thermatrix, Inc. GS Series Flameless Thermal Oxidizer at Building 181, Air Force Plant 4 (AFP 4), Fort Worth, Texas. The work was performed for AFCEE/ERT under Contract F41624-94-D-8136, Delivery Order 28.

Key AFCEE/ERT personnel:

Jim Gonzales - Project Manager

Key AFP 4 personnel

John Doepker - ASC/EMVR

Luke Gilpin - Lockheed Martin

Key Parsons ES personnel:

Steven R. Archabal - Site Manager

Douglas C. Downey - Technical Director

Peter R .Guest - Project Manager

TABLE OF CONTENTS

		Page
Preface		ii
List of Acronyms		v
1.0	INTRODUCTION	1
1.1	Site Background	1
1.2	Report Organization	2
2.0	DESCRIPTION OF TECHNOLOGY	2
2.1	Description of Thermatrix Flameless Thermal Oxidation Unit	3
2.2	System Capabilities	3
2.3	Capital Equipment	6
2.4	Regulatory Acceptance	6
3	FIELD DEMONSTRATION RESULTS	8
3.1	FTO System Configuration	8
3.2	Soil Vapor Concentrations and Extraction Rates	11
3.3	Observed FTO Performance	16
	3.3.1 Vapor Treatment Efficiency	16
	3.3.2 Operating Costs	16
	3.3.3 Reliability and Maintainability	18
3.4	Technology Performance Summary	20
4	FULL-SCALE VAPOR RECOVERY AND TREATMENT FOR BUILDING 181	22
4.1	Full-Scale Design Considerations	22
4.2	Technical Cost Comparison of Vapor Treatment Technologies	22
5	REFERENCES	25

APPENDICES

A	Piping and Instrumentation Diagrams and Vendor Information
B	TNRCC Standard Exemption Registration and Concurrence with Exemption From Permitting Procedures
C	Analytical Data Reports 1 through 5
D	Vendor Quotes for Various Vapor Treatment Technologies

LIST OF TABLES

No.	Title	Page
2.1	Summary of Vendor Capital Costs	7
3.1	Summary of FTO Treatment Efficiencies	12
3.2	Mass Removal and Emissions of Target Compounds	15
3.3	Summary of FTO Technology Demonstration Costs	17
3.4	Reliability and Maintainability	19
4.1	Cost Comparison of Full-Scale Vapor Treatment Technologies	24

LIST OF FIGURES

No.	Title	Page
2.1	Schematic of FTO Treatment Process	4
3.1	Site Layout	9
3.2	Photographs of FTO System Layout	10

LIST OF ACRONYMS

AFCEE	Air Force Center for Environmental Excellence
°F	degrees Fahrenheit
AFB	Air Force Base
BAA	Broad Agency Announcement
CAHs	chlorinated aliphatic hydrocarbons
DRE	destructive/removal efficiency
FTO	flameless thermal oxidation
GAC	granular activated carbon
Hargis	Hargis & Associated, Inc.
HCl	hydrochloric acid
Jacobs	Jacobs Engineering Group, Inc.
lb/hr	pounds per hour
LEL	lower explosive limit
mg/L	milligrams per liter
NIOSH	National Institute for Occupational Safety and Health
P&Ids	piping and instrumentation diagrams
Parsons ES	Parsons Engineering Science, Inc.
ppbv	parts per billion, volume per volume
ppmv	parts per million volume per volume
scfm	standard cubic feet per minute
SOW	statement of work
SVE	soil vapor extraction
SVEPP	soil vapor extraction pilot plant
TCE	trichloroethene
THC	total hydrocarbon compounds
Thermatrix	Thermatrix, Inc.
UEL	upper explosive limit
USEPA	US Environmental Protection Agency
VOCs	volatile organic compounds

1.0 INTRODUCTION

The Air Force Center for Environmental Excellence (AFCEE) has sponsored an ongoing program to promote the use of cost-effective soil vapor treatment technologies in conjunction with soil vapor extraction (SVE) for remediation of fuel- and solvent-impacted sites. On September 20, 1995, Parsons Engineering Science, Inc. (Parsons ES) received formal notice to proceed from HSD/PKVDA at Brooks Air Force Base (AFB) under Contract F41624-94-D-8136, Delivery Order 28, to implement a statement of work (SOW) that outlines requirements to provide services to support environmental air conformity through evaluation of the flameless thermal oxidation (FTO) vapor-phase treatment technology for SVE off-gas abatement at various Air Force base sites worldwide. Thermatrix, Inc. (Thermatrix) of Knoxville, Tennessee is an AFCEE directed subcontractor providing the FTO treatment system to be evaluated during the demonstrations. Thermatrix was selected in the Broad Agency Announcement (BAA) for Technology Demonstration for technology evaluation and cost performance of their GS Series FTO system. A technology demonstration was designed by Parsons ES to determine the applicability of using FTO technology for treatment of extracted soil vapors containing chlorinated and non-chlorinated volatile organic compounds (VOCs). Three Air Force installations were identified for demonstrating the FTO system, including Building 181 at AFP 4, Fort Worth, Texas, which is the subject of this report.

A demonstration of the SVE and vapor-phase treatment was attempted at Building 181, AFP 4, Fort Worth, Texas, from 16 March through 30 April, 1996. A series of equipment malfunctions and programmable logic controller errors precluded successful demonstration of the Thermatrix FTO treatment system during this period of time, and site-specific data were not collected. The problems encountered during system startup and attempted operation are provided in the *Final Interim Site-Specific Technical Report for the Evaluation of Thermatrix Oxidizer for Off-Gas Treatment of Trichlorethene Vapors at Air Force Plant 4, Fort Worth, Texas* (Parsons ES, 1996b).

Following repairs made by Thermatrix, and demonstration of the FTO treatment unit at Plattsburgh AFB, New York, the FTO treatment unit was remobilized to Building 181 on April 18, 1997 to conduct the demonstration of the FTO technology at AFP 4. Startup and optimization of the FTO system was conducted between 19 and 25 April 1997. The extended operation and monitoring of the FTO system was conducted from 25 April to 15 October 1997. The FTO technology demonstration was performed in accordance with the *Final Work Plan for the Evaluation of Flameless Thermal Oxidation at AFP 4* (the work plan) (Parsons ES, 1996a). The purpose of this site-specific technical report is to evaluate the effectiveness of the FTO system; summarize FTO system performance, operational costs, and reliability; and evaluate full-scale treatment system application for Building 181.

1.1 Site Background

Building 181 is located in the southwestern corner of the assembly/parts plant at AFP 4. Historically, parts degreasing operations were performed in the northwestern corner of Building 181.

In May 1991, plant personnel noted that an excessive amount of solvent [trichloroethene (TCE)] was required to fill one of the 1,500-gallon degreasing tanks (tank 544). Shortly thereafter, the tank was discovered to be leaking. Additionally, several surface spills had been reported within Building 181, although the exact volumes and locations of the spills were not documented in the available review material [Environmental Science & Engineering, Inc. (ESE), 1994a]. On July 15, 1991, degreasing storage tanks 534 and 544 were removed from service [Hargis & Associated, Inc. (Hargis), 1992].

Based on the Hargis (1992) site investigations, the highest concentrations of contamination in the subsurface were detected near the former degreasing tanks in Building 181. A more detailed description of the nature and extent of site contaminants is provided in the work plan (Parsons ES, 1996a).

In November 1993, an SVE pilot plant (SVEPP) was installed by ESE (1994b) to conduct a 3-month treatability test to determine the soil air permeabilities near each of eight SVE wells, the radius of influence around each extraction well, and the concentrations of volatile organic compounds (VOCs) in the extracted soil gas. Based on the results of analysis of soil gas samples collected after the 90-day SVEPP test, significant TCE concentrations remained at several of the extraction wells and monitoring point locations. During the SVEPP test, the extracted soil vapor was treated using granular activated carbon (GAC) prior to being discharged to the atmosphere. Because the loading capacity of GAC is relatively low when treating TCE (typically 10 percent at 90-percent relative humidity), the cost of operating a GAC system at this site is expensive. A more cost-effective vapor treatment technology for the Building 181 site is desired.

1.2 Report Organization

This document is organized into five sections, including this introduction, and four appendices. Section 2 presents a description of the FTO technology, the vendor's statement of capabilities, and a summary of regulatory acceptance. Section 3 describes the field demonstration results, including soil vapor extraction rates, VOC concentrations, and performance of the FTO system. Section 4 describes full-scale design considerations and presents a cost comparison among various vapor treatment technologies. Section 5 presents references cited in this document. Appendix A provides the piping and instrumentation diagrams (P&IDs) and vendor information for the FTO system. Appendix B includes the Texas Natural Resources Conservation Commission (TNRCC) exemption registration and concurrence with exemption from permitting procedures information. Appendix C includes a copy of Analytical Data Reports 1 through 5, and Appendix D contains vendor quotes for various soil vapor treatment technologies.

2.0 DESCRIPTION OF TECHNOLOGY

FTO is a technology that can be used to treat extracted soil vapors that contain chlorinated and/or petroleum hydrocarbons. The extracted vapors are heated to temperatures sufficient to oxidize chemical constituents and form carbon dioxide and

water vapor, and, in the case of chlorinated hydrocarbons, hydrochloric acid (HCl). The following subsections describe the FTO system tested at Building 181, system treatment capabilities, and acceptance of the technology by regulatory agencies.

2.1 Description of Thermatrix Flameless Thermal Oxidation Unit

Thermatrix of Knoxville, Tennessee has developed a proprietary technology for FTO of VOCs in vapor streams. The Thermatrix GS Series FTO system employs a "packed-bed" ceramic matrix. The oxidation of VOCs in the influent vapor stream occurs in a reaction zone within the ceramic matrix. Typical operating temperatures are from 1,600 to 1,850 degrees Fahrenheit (°F). System exhaust gases are discharged directly into the atmosphere, or can be routed through a caustic scrubber to remove HCl if the influent vapors contain chlorinated VOCs.

The FTO system for the AFP 4 demonstration site was designed to extract and treat chlorinated hydrocarbon vapors at flow rates between 20 and 120 standard cubic feet per minute (scfm), and to reduce the influent VOC concentrations by not less than 99.99 percent. SVE vacuum is induced in the subsurface using multiple vapor extraction wells and an extraction blower. Extracted soil vapors are injected into the FTO unit at a regulated flow rate, pass through the static premixing chamber, and then flow into the reaction bed where complete oxidation occurs at approximately 1,800°F.

When the vapor stream reaches oxidation temperature, organic compounds react within the oxidizer vessel to form carbon dioxide, water, and (in the case of chlorinated hydrocarbons) HCl, releasing heat that is then absorbed by the ceramic matrix of the reaction bed. The system tested at Building 181 included an effluent caustic scrubber that was designed to remove at least 99.5 percent of HCl from the reactor exhaust at the maximum design loading rate of approximately 3.0 pounds per hour (lb/hr) of HCl. The GS Series FTO unit used at this site allowed for a single pass of the extracted vapors through the oxidizer at a nominal residence time of 0.5 second. A schematic of the FTO treatment process is presented on Figure 2.1. A complete process flow schematic of the FTO system is shown in the P&IDs presented in Appendix A.

The FTO system is skid-mounted on a trailer with a dedicated electrical distribution system. The system is designed to operate within single-circuit, 480-volt, 3-phase, 60-amp electrical power limitations. The system is enclosed to provide weather protection for system components that could be affected by temperature, moisture, and/or windblown particulates.

2.2 System Capabilities

Thermatrix manufactures a patented GS Series FTO treatment unit that incorporates a corrosion resistant ceramic matrix and oxidizer materials that are immune to moisture and acid, noncatalytic, and have a temperature rating of up to 2,500°F. Thermatrix FTO unit information is provided in Appendix A.

Based on information provided by Thermatrix, a series of tests have demonstrated the inherent safety of the FTO system (Meltzer, 1992). Conditions considered to be worst-case from a safety standpoint were investigated by Thermatrix. Flow rates and

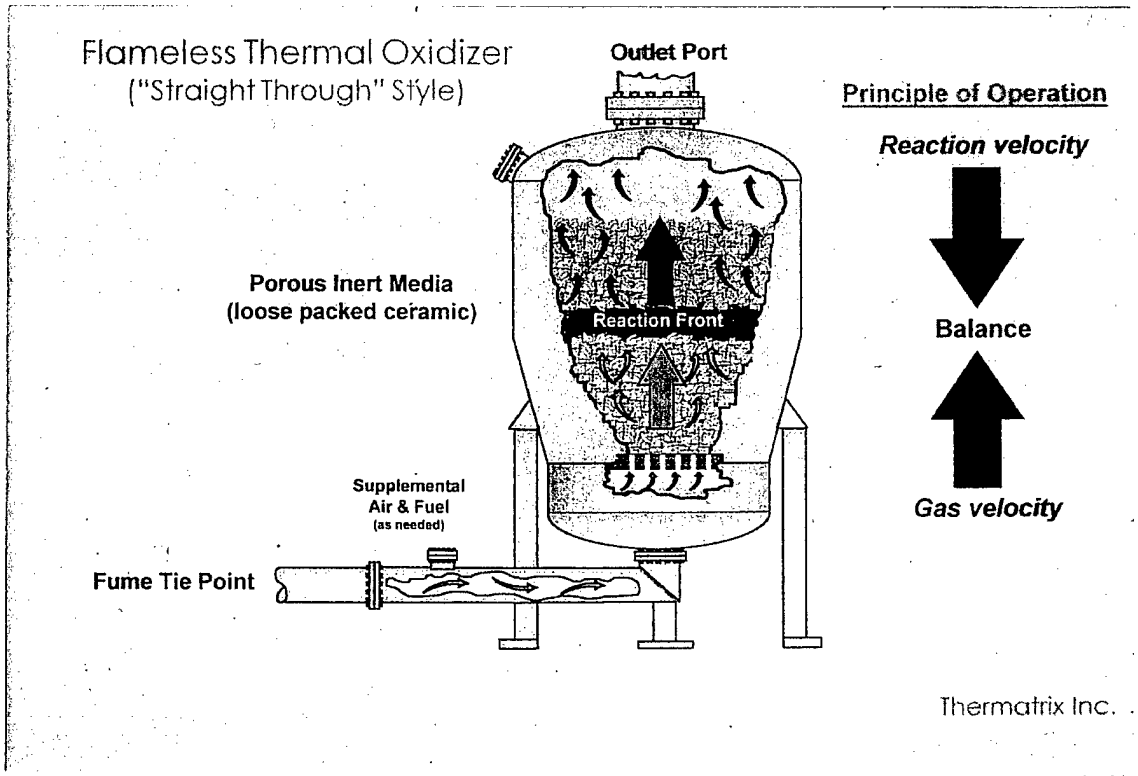

FIGURE 2.1

SCHEMATIC OF FTO TREATMENT PROCESS

FTO Demonstration
Building 181
Air Force Plant 4, Texas

PARSONS ENGINEERING SCIENCE, INC.

Denver, Colorado

concentrations of VOCs (as propane) were varied over wide ranges. The different flow rates through the unit resulted in residence times ranging from 0.15 second to 10 minutes, and VOC concentrations of between 1,000 to 160,000 parts per million, volume per volume (ppmv) spanned the flammability range from 5 percent of the lower explosive limit (LEL) to 170 percent of the upper explosive limit (UEL). Under all test conditions, no flashback or detonation occurred.

In many flame-based devices, some of the soil vapor can bypass the flame zone, which can result in the formation of products of incomplete combustion (PIC). The configuration of the flameless oxidizer is designed to eliminate these problems. The reaction zone covers the entire cross-section of the ceramic matrix, and all of the vapor must pass through the reaction zone before it exhausts from the oxidizer as carbon dioxide, water, and HCl (Figure 2.1).

Complete conversion of the VOCs into harmless byproducts and HCl occurs rapidly in the reaction zone of the FTO unit because of premixing of the influent contaminated vapors with air (oxygen) and the heat-transfer properties of the ceramic matrix. Testing by Thermatrix has shown that a residence time of 0.15 second in the FTO can result in greater than 99.99 percent destructive/removal efficiency (DRE) for hydrocarbon vapors. The flameless oxidizer tested at AFP 4 has a nominal residence time of 0.5 second (Thermatrix, 1992).

According to Thermatrix (1992), the FTO technology is capable of processing batch or variable-flow vapors or fumes because of the heat-retention and radiant-heat properties of the ceramic matrix design. The technology can handle VOC vapor spikes above nominal capacity, or a complete interruption in vapor flow, and remain functionally on-line with no disruption of DRE or safety concerns (as could occur with a flame blow out).

Although, influent vapors can vary in hydrocarbon concentration, a minimum of 12-percent oxygen within the influent vapor system is required to sustain the oxidation process. Because many hydrocarbon-contaminated sites have low initial soil gas oxygen levels, soil gas dilution with ambient air often is required to ensure that sufficient oxygen enters the oxidizer.

Performance tests by the manufacturer have demonstrated the 99.99-percent and greater DRE of the FTO system for a wide variety of VOCs, including chlorinated hydrocarbons (Meltzer, 1992; Thermatrix, 1992). Tests also have measured typical nitrogen oxide emissions of less than 2 ppmv, and carbon monoxide emissions of less than 10 ppmv. Single-component and mixed organic vapor streams have been successfully treated, with vapor constituents that have included benzene, carbon tetrachloride, dichloromethane, ethyl chloride, isopropanol, methane, paint solvent mixtures, propane, and toluene. These compounds are chemically representative of many of the types of industrial VOCs, including chlorinated aliphatic hydrocarbons (CAHs), that can be treated with FTO technology. The test procedures, analytical methods, and performance results for the GS Series FTO unit are detailed in a separate vendor report (Thermatrix, 1992).

2.3 Capital Equipment

Table 2.1 provides the total capital cost for the Thermatrix GS Series FTO treatment system purchased for this demonstration program. The FTO treatment system was purchased by the Air Force from Thermatrix on a "shared-cost" basis. The Thermatrix contribution was $40,000, which was the difference between the equipment funding requested by the Air Force and the established commercial value of the FTO system. Therefore, the cost paid by the Air Force for the FTO system was $235,265, versus an actual commercial cost of $275,265.

To determine the prorated capital cost for the 180-day AFP 4 demonstration, the total capital cost of $275,265 was averaged over an estimated 3-year life of the FTO system [($275,265/1,095 days) x 180 days = $45,249]. This cost includes the quench/scrubber that was required to meet the TNRCC maximum allowable HCl emission rate of 0.0247 (Section 2.4). No costs were added for the spring 1996 initial FTO demonstration mobilization. Capital and operational costs to conduct the FTO system demonstration at AFP 4 are presented in Section 3.3.2.

2.4 Regulatory Acceptance

Acceptance of Thermatrix FTO systems by regulatory agencies has been widespread. Agencies that have approved this technology for site remediation include state environmental agencies, and local air quality districts. Based on information provided by Thermatrix, the following states have permitted Thermatrix FTO systems to date:

California	Georgia	Idaho
Indiana	Louisiana	Maryland
Massachusetts	Michigan	Mississippi
Montana	New Jersey	New York
North Carolina	Pennsylvania	South Carolina
Tennessee	Texas	

Also, Canada, England, and France have approved the use of this system. Additional projects are underway in the Netherlands and Taiwan.

To ensure compliance with the Texas Clean Air Act as implemented by TNRCC, Parsons ES, in conjunction with AFP 4 and AFCEE, prepared the necessary documentation to obtain approval to conduct the pilot-scale demonstration of the FTO system at Building 181, AFP 4, Fort Worth, Texas. In order to expedite the approval process, Parsons ES completed the necessary forms to request a TNRCC Standard Exemption 68 permit pertaining to the FTO demonstration. The existing SVE and groundwater treatment systems installed at Building 181 were already registered under a Lockheed Fort Worth Company Standard Exemption Registration. General site information contained in the existing Standard Exemption Registration was used during the preparation of the FTO system Standard Exemption application for the technology demonstration at Building 181, AFP 4. The Standard Exemption Registration, and TNRCC concurrence with the exemption from permitting procedures, are presented in Appendix B. Section V (Emissions Data) of the Standard Exemption Registration (Form PI-7) presents the discussion and calculations for determining the maximum

TABLE 2.1
SUMMARY OF VENDOR CAPITAL COSTS
FLAMELESS THERMAL OXIDATION DEMONSTRATION
BUILDING 181
AIR FORCE PLANT 4, TEXAS

Item	Cost
Thermatrix Engineering and Project Management	$16,000
Basic FTO Treatment Unit	$164,000[a/]
Quench/Scrubber System	$62,000
FTO System Trailer	$19,500
SVE Blower and Knockout Drum	$3,615
Electrical Equipment	$4,900
Control Valves	$4,500
Miscellaneous Items	$750
TOTAL	$275,265

a/ This cost includes $40,000 contributed by Thermatrix for the design and fabrication of the FTO system.

loading rate for the FTO system (3.67 lbs/hr of TCE) to meet the maximum allowable emission rate for HCl (1.0 lb/hr).

3.0 FIELD DEMONSTRATION RESULTS

Testing of the FTO system was conducted over an approximate 26-week period from 19 April to 15 October, 1997. The wells used during the testing period included deep extraction well UZ-1 and shallow (perched zone) extraction wells PZ-1 through -7 (See Figure 3.1).

The FTO system configuration for the field demonstration is presented in Section 3.1. Test data collected for design and operation of a full-scale system included soil vapor VOC concentrations and vapor extraction rates (Section 3.2). The performance of the FTO system during the demonstration at Building 181 is described in Section 3.3.

3.1 FTO System Configuration

The trailer-mounted FTO pilot-test unit was positioned west of Building 181 during the demonstration (Figure 3.1). Power (480-volt/3-phase/60 amp) was supplied to the FTO from an existing, onsite power supply. Propane, required as a supplemental fuel to maintain reactor bed operating temperatures, was supplied by a local vendor. The propane was stored in a 500-gallon propane tank mounted on the FTO system trailer.

The FTO system was connected to existing vapor extraction wells (UZ-1 and PZ-1 through PZ-7), the potable water source, and associated vapor line manifold piping installed by ESE in 1993 for the SVEPP. Tie-ins to the existing SVEPP piping system were made downstream from the manifold portion of the vapor line piping and upstream from the existing blower in order to maintain independent control of vapor flow from each well during the demonstration period. The existing GAC vapor treatment component of the SVEPP system associated with Building 181 was not operated during the FTO demonstration period; only the SVEPP groundwater treatment system was operated concurrently with the Thermatrix unit during the test. Additional information on the SVEPP system is documented in *Soil Vapor Extraction Pilot Plant Study, Building 181, Fort Worth, Texas* (ESE, 1994b).

Soil vapor was extracted from wells UZ-1 and PZ-1 through PZ-7 using a 6-horsepower vacuum blower. P&IDs of the FTO unit are included in Appendix A. Figure 3.2 provides photographs of the FTO system.

The FTO unit was designed to extract and treat contaminated vapors at flow rates between 20 and 120 scfm and to reduce the influent VOC concentrations by not less than 99.99 percent. The system also included an effluent caustic scrubber to remove HCl, which is formed during the thermal oxidation of chlorinated solvents. During field testing, the influent vapor flow rate to the FTO unit was maintained at 105 cubic feet per minute (cfm) by using a combination of soil vapors and ambient air.

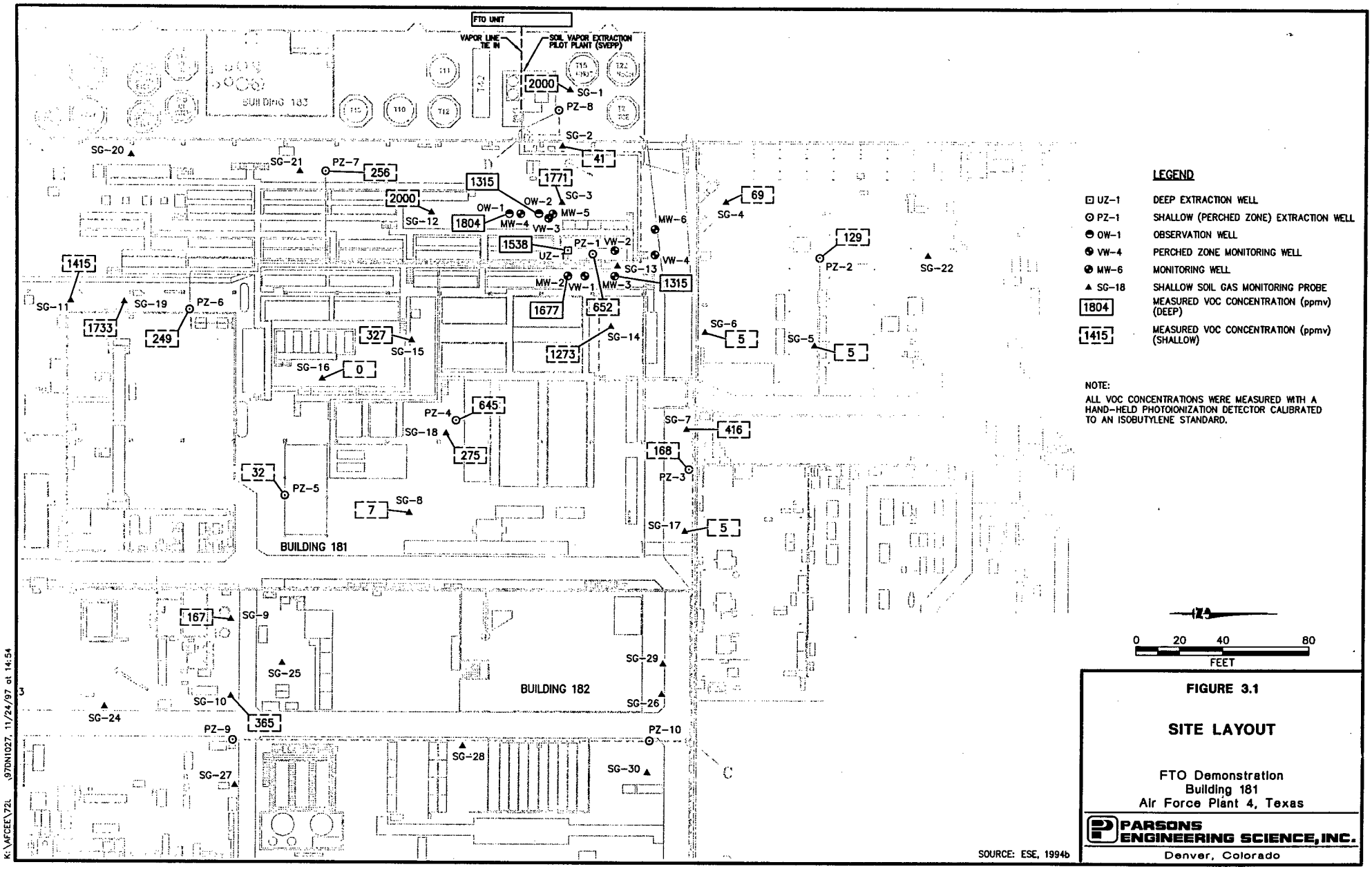

FIGURE 3.1

SITE LAYOUT

FTO Demonstration
Building 181
Air Force Plant 4, Texas

PARSONS ENGINEERING SCIENCE, INC.
Denver, Colorado

K:\AFCEE\72L .97DN1027, 11/24/97 at 14:54

3.2 Soil Vapor Concentrations and Extraction Rates

The primary chemical of concern at Building 181 is TCE. Influent and effluent vapor sample analytical results are summarized in Table 3.1 and included in the Analytical Data Reports presented in Appendix C. The most recent summary of field measurements is presented in Analytical Data Report 5. Data collected during FTO testing included laboratory analysis of influent and effluent vapor samples using US Environmental Protection Agency (USEPA) Method TO-14 (VOCs), National Institute for Occupational Safety and Health (NIOSH) Method 7903 (HCl), soil vapor extraction flow rates, and field measurements (made using hand-held instruments) of soil gas oxygen, carbon dioxide, and total hydrocarbons.

The influent vapor flow rate to the FTO unit was held constant at 105 cfm by using an automatically controlled air bleed-in valve. This valve regulated the amount of ambient air (oxygen) that was added to the extraction well vapor stream to maintain a constant flow rate into the oxidizing zone of the FTO unit.

The concentrations of total hydrocarbon compounds (THC) detected by the laboratory, using Method TO-14, in the post dilution influent vapor stream ranged from 60,000 to 100,000 parts per billion (ppbv) (Table 3.1). The concentrations of THC are referenced to heptane (molecular weight equal to 100). The concentrations of TCE detected by the laboratory, using Method TO-14, in the post-dilution influent vapor stream ranged from 67,000 to 170,000 ppbv (Table 3.1).

During the field demonstration, an estimated 572 pounds of TCE was recovered from the soil over a total of 109 days of extraction. Analysis for HCl using NIOSH Method 7903 was conducted for the effluent vapor samples collected on 23 and 25 April 1997. HCl was observed at a concentration of 0.17 milligram per liter (mg/L) and 0.12 mg/L on 23 April 1997, and not detected in subsequent sampling events (Table 3.2). The effluent caustic scrubber was effective in removing HCl to an average discharge rate of 0.057 and <0.040 lb/hr.

Several unexpected VOCs were detected by the analytical laboratory in the effluent vapor samples (Table 3.1). These compounds include 1,2,4-trimethylbenzene, 2-butanone, 2-propanol, acetone, benzene, chloroform, chloromethane, ethylbenzene, freon 11, heptane, m,p-xylene, o-xylene, tetrahydrafuran, and toluene. The compounds 2-propanol, benzene, chloroform, chloromethane, ethylbenzene, freon 11, heptane, m,p-xylene, and o-xylene were not detected after the first week of system operation. It is possible that these compounds were present in the influent samples, however they were not detected because dilution was required due to the high concentration of TCE present in the influent soil gas sample. Although new tygon tubing and Tedlar® bags were used for each sampling event, the possibility of contaminants being introduced in the sampling medium during the sampling process cannot be ruled out. Parsons ES will collect an equipment blank(s) during the effluent sampling at the next FTO demonstration site to ensure the cleanliness of the sampling equipment (i.e., tygon tubing and Tedlar® bags). Although not likely, the 1-liter SUMMA® canisters may have residual contaminants following the decontamination

TABLE 3.1
SUMMARY OF FTO TREATMENT EFFICIENCIES
FLAMELESS THERMAL OXIDATION DEMONSTRATION
BUILDING 181
AIR FORCE PLANT 4, TEXAS

Analyte	Date	Detected Concentration (ppbv)[a]			
		Post-Dilution Influent Sample AFP4-IOX-105	Post-Dilution Influent Sample AFP4-IOX-105-DUP	Effluent Sample AFP4-ESB-105	Destruction/ Removal Efficiency (percent)
1,2,4-Trimethylbenzene	4/22/97	ND[b]	NA[c]	4.6	NA
2-Butanone	4/22/97	ND	NA	35	NA
2-Propanol	4/22/97	ND	NA	110	NA
Acetone	4/22/97	ND	NA	180	NA
Benzene	4/22/97	ND	NA	ND	NA
Chloroform	4/22/97	ND	NA	ND	NA
Chloromethane	4/22/97	ND	NA	5.5	NA
Ethylbenzene	4/22/97	ND	NA	ND	ND
Freon 11	4/22/97	ND	NA	7.4	NA
Heptane	4/22/97	ND	NA	ND	NA
m,p-Xylene	4/22/97	ND	NA	6.3	NA
o-Xylene	4/22/97	ND	NA	ND	NA
Tetrahydrofuran	4/22/97	ND	NA	24	NA
Toluene	4/22/97	ND	NA	30	NA
Trichloroethene	4/22/97	130,000	NA	ND	100.00
THC[d]	4/22/97	100,000	NA	250	99.75
1,2,4-Trimethylbenzene	4/23/97	ND	NA	5.1	NA
2-Butanone	4/23/97	ND	NA	ND	NA
2-Propanol	4/23/97	ND	NA	ND	NA
Acetone	4/23/97	ND	NA	23	NA
Benzene	4/23/97	ND	NA	24	NA
Chloroform	4/23/97	ND	NA	4.2	NA
Chloromethane	4/23/97	ND	NA	ND	NA
Ethylbenzene	4/23/97	ND	NA	10	NA
Freon 11	4/23/97	ND	NA	ND	NA
Heptane	4/23/97	ND	NA	26	NA
m,p-Xylene	4/23/97	ND	NA	29	NA
o-Xylene	4/23/97	ND	NA	11	NA
Tetrahydrofuran	4/23/97	ND	NA	18	NA
Toluene	4/23/97	ND	NA	110	NA
Trichloroethene	4/23/97	120,000	NA	ND	100.00
THC	4/23/97	85,000	NA	540	99.36

TABLE 3.1 (Continued)
SUMMARY OF FTO TREATMENT EFFICIENCIES
FLAMELESS THERMAL OXIDATION DEMONSTRATION
BUILDING 181
AIR FORCE PLANT 4, TEXAS

		Detected Concentration (ppbv)[a/]			
Analyte	Date	Post-Dilution Influent Sample AFP4-IOX-105	Post-Dilution Influent Sample AFP4-IOX-105-DUP	Effluent Sample AFP4-ESB-105	Destruction/ Removal Efficiency (percent)
1,2,4-Trimethylbenzene	4/25/97	ND	ND	ND	NA
2-Butanone	4/25/97	ND	ND	ND	NA
2-Propanol	4/25/97	ND	ND	ND	NA
Acetone	4/25/97	ND	ND	21	NA
Benzene	4/25/97	ND	ND	ND	NA
Chloroform	4/25/97	ND	ND	ND	NA
Chloromethane	4/25/97	ND	ND	ND	NA
Ethylbenzene	4/25/97	ND	ND	ND	NA
Freon 11	4/25/97	ND	ND	ND	NA
Heptane	4/25/97	ND	ND	ND	NA
m,p-Xylene	4/25/97	ND	ND	ND	NA
o-Xylene	4/25/97	ND	ND	ND	NA
Tetrahydrofuran	4/25/97	ND	ND	ND	NA
Toluene	4/25/97	ND	ND	ND	NA
Trichloroethene	4/25/97	140,000	140,000	ND	100.00
THC	4/25/97	100,000	100,000	ND	100.00
1,2,4-Trimethylbenzene	5/8/97	ND	NA	5.8	NA
2-Butanone	5/8/97	ND	NA	21	NA
Acetone	5/8/97	ND	NA	46	NA
Ethanol	5/8/97	ND	NA	44	NA
Tetrahydrofuran	5/8/97	ND	NA	20	NA
Toluene	5/8/97	ND	NA	7.3	NA
Trichloroethene	5/8/97	67,000	NA	ND	100.00
THC[d/]	5/8/97	60,000	NA	360	99.40
1,2,4-Trimethylbenzene	6/3/97	ND	NA	ND	NA
2-Butanone	6/3/97	ND	NA	ND	NA
Acetone	6/3/97	ND	NA	32	NA
Toluene	6/3/97	ND	NA	ND	NA
Trichloroethene	6/3/97	170,000	NA	52	99.97
m,p-Xylene	6/3/97	ND	NA	ND	NA
THC	6/3/97	83,000	NA	ND	100.00
1,2,4-Trimethylbenzene	6/16/97	ND	NA	ND	NA
2-Butanone	6/16/97	ND	NA	ND	NA
Acetone	6/16/97	ND	NA	20	NA
Toluene	6/16/97	ND	NA	ND	NA
Trichloroethene	6/16/97	110,000	NA	ND	100.00
m,p-Xylene	6/16/97	ND	NA	ND	NA
THC	6/16/97	60,000	NA	550	99.08

TABLE 3.1 (Concluded)
SUMMARY OF FTO TREATMENT EFFICIENCIES
FLAMELESS THERMAL OXIDATION DEMONSTRATION
BUILDING 181
AIR FORCE PLANT 4, TEXAS

Analyte	Date	Detected Concentration (ppbv)[a/]			
		Post-Dilution Influent Sample AFP4-IOX-105	Post-Dilution Influent Sample AFP4-IOX-105-DUP	Effluent Sample AFP4-ESB-105	Destruction/ Removal Efficiency (percent)
1,2,4-Trimethylbenzene	6/30/97	ND	NA	5.6	NA
2-Butanone	6/30/97	ND	NA	21	NA
Acetone	6/30/97	ND	NA	ND	NA
Toluene	6/30/97	ND	NA	6.5	NA
Trichloroethene	6/30/97	95,000	NA	ND	100.00
m,p-Xylene	6/30/97	ND	NA	7.1	NA
THC	6/30/97	83,000	NA	470	99.43

[a/] ppbv = parts per billion by volume, as determined by Air Toxics, Folsom, California using United States Environmental Protection Agency Method TO-14 GC/MS Full Scan.

[b/] ND = Not detected.

[c/] NA = Not applicable.

[d/] THC = Total hydrocarbons referenced to heptane (molecular weight = 100).

TABLE 3.2
MASS REMOVAL AND EMISSIONS OF TARGET COMPOUNDS
FLAMELESS THERMAL OXIDATION DEMONSTRATION
BUILDING 181
AIR FORCE PLANT 4, TEXAS

Date Sampled	Extraction Wells	Days of Operation	Influent TCE[a] Concentration (ppmv)[b]	Influent TCE[a] Concentration (mg/L)[c]	Flow Rate (scfm)	Pounds of TCE Removed	Effluent THC[a] Concentration (ppmv)	Effluent THC[a] Concentration (mg/L)	Total Daily THC Emissions (pounds/day)	Effluent HCL Concentration (mg/L)	Total Daily HCl Emissions (pounds/hour)
4/22/97	PZ-1-PZ-7, and UZ-1	2.08	130	711	105	14	0.25	1.0	0.01	NA[d]	NA
4/23/97	PZ-1-PZ-7, and UZ-1	0.84	120	656	105	5	0.54	2.2	0.02	0.17/0.12[e]	0.057
4/25/97	PZ-1-PZ-7, and UZ-1	1.71	140	765	105	12	0.00	0.0	0.00	ND[f]	ND
5/8/97	PZ-1-PZ-7, and UZ-1	13.00	67	366	105	45	0.36	1.5	0.01	ND	ND
6/3/97	PZ-1-PZ-7, and UZ-1	10.03	170	929	105	88	0.00	0.0	0.00	NA	NA
6/16/97	PZ-1-PZ-7, and UZ-1	13.10	110	601	105	74	0.55	2.3	0.02	NA	NA
6/30/97	PZ-1-PZ-7, and UZ-1	14.16	95	519	105	69	0.47	2.0	0.02	NA	NA
10/15/97	PZ-1-PZ-7, and UZ-1	54.10	95 [f]	519 [f]	105	264 [g]	NA	NA	NA	NA	NA
	Total =	109.03			Total =	572					

[a] Values given for total hydrocarbons (THC) are referenced to heptane (molecular weight =100), TCE molecular weight is 131.5. Samples collected after addition of dilution air.

[b] ppmv = parts per million by volume, as determined by the analytical laboratory.

[c] mg/L = micrograms per liter, as determined by the analytical laboratory.

[d] NA = not analyzed.

[e] On this date, two effluent samples were collected for analysis of HCl using NIOSH Method 7903. The average of these two samples was used to calculate the total daily HCl emissions (pounds/hour).

[f] ND = not detected.

[g] No samples were collected during the final shutdown of the FTO unit: therefore, the June 30, 1997 data were used to estimate the total pounds of TCE removed.

process performed by Air Toxics, Ltd., which could result in detections near the individual analyte detection limit.

Tetrahydrafuran also was detected in the startup effluent samples at Plattsburgh AFB, but was not detected in subsequent sampling events. Tetrahydrafuran is a solvent for high-grade polymers, especially polyvinyl chloride (PVC) (MERCK and Co., Inc., 1983), and may be generated from the incomplete combustion of PVC solvent welding compounds that were used to connect the FTO unit to the SVEPP system.

3.3 Observed FTO Performance

The performance of the Thermatrix FTO system was evaluated based on three primary criteria: treatment efficiency, relative cost, and reliability and maintainability. Performance evaluation results are presented in the following subsections.

3.3.1 Vapor Treatment Efficiency

FTO vapor treatment efficiencies for THC and TCE are presented in Table 3.1, and were calculated using the following equation:

$$\text{Treatment Efficiency} = \frac{\text{Concentration}_{\text{Influent}} - \text{Concentration}_{\text{Effluent}}}{\text{Concentration}_{\text{Influent}}} \times 100$$

The vapor treatment efficiency of the Thermatrix FTO system was evaluated using analytical results for samples collected during April, May, and June 1997. The influent and effluent vapor streams of the FTO unit were sampled using 1-liter SUMMA® canisters, and samples were analyzed by Air Toxics, Ltd. of Folsom, California for VOCs using USEPA Method TO-14. Based on the data, the FTO unit was between 99.97- and 100-percent efficient at removing TCE from extracted soil vapors (Table 3.1).

3.3.2 Operating Costs

The costs for the FTO system demonstration are summarized in Table 3.3. The total cost for the FTO system monitoring and operation for a total of 180 days during the period from April 19, 1997 to October 15, 1997, was $128,484, which is equivalent to $714 per day (Table 3.3). During the field demonstration, a total of 572 pounds of TCE vapors were recovered from site soils during 109 days of vapor extraction. The treatment costs per pound of TCE recovered ranged from $136.06 per pound [($714 x 109 days/572 pounds)] to $224.70 per pound [($714 x 180 days/572 pounds)]. During this pilot study, influent TCE concentrations from the wells ranged from 67 to 170 ppmv (Table 3.1).

Due to the low influent concentrations at this site, the FTO system was operating at only 5 to 10 percent of the designed loading rate, which dramatically increased the cost per pound. In order for the FTO system to meet the stringent HCl emissions rate of 0.0247 lb/hour, the maximum loading rate of the FTO system could not exceed 3.67 lb/hour TCE (see Appendix B). This is equivalent to approximately 88 lb/day TCE.

TABLE 3.3
SUMMARY OF FTO TECHNOLOGY DEMONSTRATION COSTS
FLAMELESS THERMAL OXIDATION DEMONSTRATION
BUILDING 181
AIR FORCE PLANT 4, TEXAS

Interagency WBS #[a/]	Cost Item	Subtotal
33-07	Capital Costs[b/]	$45,249
33-01-XX-01-05	Thermatrix Mobilization/Startup[c/]	$23,188
33-01-XX-01-05	Transportation of Treatment Unit to and from Site	$3,480
33-01-XX-01-06	Mobilization/Startup Labor	$11,866
33-14-XX-01-06	Analytical	$3,930
33-14-XX-01-06	Sampling/Operating Labor	$14,946
33-14-XX-01-08	Thermatrix Operating Labor	$3,300
33-14-XX-01-08	Other Direct Costs[d/]	$13,030
33-14-XX-01-08	Electricity[e/]	$1,185
33-14-XX-01-08	Propane[f/]	$6,810
33-21-XX-01-12	Thermatrix Demobilization	$0
33-21-XX-01-12	Demobilization Labor[g/]	$1,500
	TOTAL	$128,484

a/ USEPA (1995).
b/ Daily capital cost is the total vendor capital costs averaged over an estimated 3 year life of the FTO system [($275,265/1,095 days) x 180 days = $45,249].
c/ Includes service performed by Thermatrix, Inc. in Knoxville, TN prior to the FTO demonstration at AFP 4, TX.
d/ Other direct costs include travel, per diem, supplies.
e/ Excludes power costs for site SVE blower and assumes $0.082 per kilowatt hour.
f/ Costs based on actual propane use and average cost of $0.88 per gallon.
g/ Estimate; actual costs not available at this time.

This theoretical maximum loading rate would have resulted in approximately 9,590 pounds of TCE vapors recovered from site soils during 109 days of vapor extraction. Assuming this maximum loading rate, the treatment costs per pound of TCE recovered would range from $8.1 per pound [($714 x 109 days/9,590 pounds)] to $13.4 per pound [($714 x 180 days/9,590 pounds)], or an order of magnitude less than the actual costs. If HCl emissions were not an issue at this site, the maximum loading rate of the FTO system would have been 880 lb/day.

Approximately 2 labor hours per week were required for onsite system monitoring. System monitoring included checking various system parameters including oxidizer temperatures, supplemental fuel consumption, scrubber temperature, and caustic solution flow rates and liquid levels in both the scrubber caustic and quench tanks and inlet moisture separator. Generally, each visit takes 30 minutes or less, depending on whether any parameter requires adjustment. Supplemental fuel (i.e., propane) was delivered to the site by a local supplier.

Sampling of the system influent and effluent vapor samples takes approximately 2 hours per event. Typical monthly sampling (once per month) and system monitoring totaled approximately 8 to 10 hours per month, if no unexpected shutdowns occur. During testing, approximately 200 gallons of caustic was used in the scrubber system.

Excluding electrical costs for the 6-horsepower SVE blower, approximately 14,457 kilowatts of electricity were used during system operation. The electrical costs for the SVE blower were excluded because the SVE blower is required for any vapor extraction system, and the cost comparison was intended to compare the FTO technology to other vapor treatment technologies. At an estimated cost of $0.082 per kilowatt hour, the total electricity cost was approximately $1,185. Approximately 7,735 gallons of propane was consumed during the demonstration. At an average cost of $0.88 per gallon, including delivery, the total cost of propane was $6,810. Costs for mobilization/demobilization of the FTO equipment, including transportation of the unit to and from site and system startup, were $38,571. This cost includes service performed on the unit by Thermatrix, Inc. in Knoxville, TN prior to the FTO demonstration at AFP 4, TX. Costs for collection of soil vapor samples, laboratory analyses (analytical), and associated operations and maintenance costs were $31,906.

3.3.3 Reliability and Maintainability

Following optimization, extended operation was conducted to monitor system reliability, changes in site conditions, and operating costs. The extended operation and monitoring of the FTO system was conducted from 25 April to 15 October 1997.

During the time period from 22 April to 8 July 1997, the FTO treatment system ran for 1,490 hours, with a run time of approximately 78 percent, as shown on Table 3.4. Several shutdowns occurred during this period; however, all shutdowns were due to external problems. Problems causing FTO unit shutdowns included: 1) loss of external water supply to the quench scrubber; 2) failure of a float switch in the groundwater treatment system air stripper sump (the discharge point for the scrubber effluent), which caused the FTO unit to shut down due to high water level in the quench tank;

TABLE 3.4
RELIABILITY AND MAINTAINABILITY
FLAMELESS THERMAL OXIDATION DEMONSTRATION
BUILDING 181
AIR FORCE PLANT 4, TEXAS

Extraction Wells	Date	Time	Run Time Meter (hours)	Run Time Since Last Event (hours)	Cumulative Extraction Time (hours)	Cumulative System Down Time due to Unit Problems (hours)	Cumulative System Down Time due to External Problems (hours)	Possible Run Time (percent)	Dilution Valve Opening (percent)	Total Air Flow Rate Into Oxidizer (scfm)	Inlet Field VOC Concentration Pre-Dilution (ppmv)	Inlet Field VOC Concentration Post-Dilution (ppmv)	Comments
PZ-1, PZ-4, UZ-1	4/19/97	1600	-	0	0	0	0	0		115		560	
PZ-1, PZ-4, UZ-1	4/20/97	800	-	16	16	0	0	100		115		850	
All	4/20/97	930	-	1.5	17.5	0	0	100		105		340	
All	4/20/97	1400	-	4.5	22	0	0	100		105		305	
All	4/20/97	1815	-	4.25	26.25	0	0	100					Unit down due to loss of pH signal - 4/20/97, 18:15 - 4/21/97 16:50
All	4/21/97	1650	-	0	26.25	21.25	0	55		105		293	Unit restarted and in run mode on soil vapor
All	4/22/97	900	3034.5	17	43.25	21.25	0	67	16.5	105		320	
All	4/22/97	1545	-	6.75	50	21.25	0	70	24.2	105	280	245	Collected influent and effluent VOC samples
All	4/23/97	1200	-	20.25	70.25	21.25	0	77		105	215	205	Collected influent VOC and effluent VOC and HCL samples
All	4/24/97	1300	-	25	95.25	21.25	0	82					Unit auto shutdown due to loss of external water supply
All	4/25/97	0000	-	0	95.25	21.25	11	75		105			Unit restarted and in run mode on soil vapor
All	4/25/97	1600	-	16	111.25	21.25	11	78		105	303	287	Collected influent VOC and effluent VOC and HCL samples
All	5/8/97	1800	3423.6	312	423.25	21.25	11	93	40	105	230	123	Collected influent VOC and effluent VOC and HCL samples
All	5/9/97	940	3439.3	15.7	438.95	21.25	11	93	0	105		233	
All	5/12/97	1100	3513.9	74.6	513.55	21.25	11	94					Unit auto shutdown due to float switch stuck in water discharge tank (exteneral)
All	5/19/97	1800	3520.8	0	513.55	21.25	190.76	71	0	105			Unit restarted and placed in run mode
All	5/20/97	0715	3533.5	12.7	526.25	21.25	190.76	71	0	105			
All	5/20/97	1115	3537.5	4	530.25	21.25	190.76	71	0	105			
All	5/25/97[a]	1200[a]	3658.8	121.3	651.55	21.25	190.76	75					Unit auto shutdown due to empty propane tank (external)
All	6/2/97	1945	3665.9	0	651.55	21.25	390.21	61	12	105	102	36.1	Unit restarted and placed in run mode
All	6/3/97	0815	3678.4	12.5	664.05	21.25	390.21	62	22.5	105	315	280	Collected influent and effluent VOC samples
All	6/16/97	1050	3992.9	314.5	978.55	21.25	390.21	70	23.5	105	183	188	Collected influent and effluent VOC samples
All	6/17/97	800	4014.7	21.8	1000.35	21.25	390.21	71	23.3	105	279	277	
All	6/30/97	1130	4329.7	315	1315.35	21.25	390.21	76	24.5	105	394	349	Collected influent and effluent VOC samples
All	6/30/97	1430	4332.7	3	1318.35	21.25	390.21	76	24.6	105	313	305	
All	7/8/97[a]	1612[a]	4526.4	193.7	1512.05	21.25	390.21	79					Unit auto shut down due to low water level in quench tank.[b]
All	8/5/97	1630	-	0	1512.05	21.25	1452.72	51		105			Unit restarted and placed in run mode
All	8/8/97	1500[a]	4584	57.6	1569.65	21.25	1452.72	52					Unit auto shutdown due to float switch stuck in water discharge tank (exteneral)
All	8/17/97	1600	4590	0	1569.65	21.25	1669.72	48		105		200	Unit restarted and placed in run mode
All	8/26/97	900[a]	-	209	1788.65	21.25	1669.72	51					Unit auto shutdown due to low flow to the scrubber because of fluctuations in water supply
All	9/10/97	1630	-	0	1788.65	21.25	2037.22	46		105			Unit restarted and placed in run mode
All	10/15/97	1430	-	838	2616.65	21.25	2037.22	56					Unit shut down by IT Corporation; FTO demonstration and sampling concluded

[a] Approximate.

[b] It was determined during the July 14, 1997 inspection that a thermocouple and water solenoid valve required replacement. However, the July 8, 1997 shutdown of FTO unit may have resulted from a loss of fresh water supply from Building 181 to the scrubber system because a low-flow alarm message was indicated, or due to a high (i.e., >2,300°F) oxidizer temperature.

and 3) supplemental fuel exhaustion due to the propane tank not being refilled on schedule. Additional information pertaining to the nature of these shutdowns is included in the analytical data reports provided in Appendix C.

Due to a loss of fresh water supply to Building 181 or problems with a thermocouple (TC306), the system shut down on 8 July 1997, and remained down from 8 July until 5 August 1997, while the thermocouple was on order from the supplier. Following replacement of the thermocouple, the unit was restarted on 5 August 1997; however, the unit shut down again on 8 August 1997 due to the float switch in the scrubber effluent discharge tank being stuck. The unit was restarted on 17 August 1997 and shut down on 26 August 1997 due to low water flow to the scrubber. The low water flow rate [0.5 gallon per minute (gpm)] to the FTO scrubber could not be maintained by the AFP 4 water supply. The low-flow shut downs occurred when minor fluctuations in the water pressure decreased the water flow rate to the scrubber. If the fresh water supply flow was not manually increased, the scrubber system did not receive enough water to maintain adequate internal water levels and flow rates.

On 10 September 1997, the unit was restarted and the SVE, and treatment using the FTO system was resumed. From 10 September 1997 to 15 October 1997, the unit operated successfully without any shutdowns. When the unit was restarted on 10 September 1997, the water flow to the scrubber was increased to approximately 1 gpm in order to avoid system shutdowns due to minor decreases in the water supply pressure. During the period between 10 September and 15 October 1997, the AFP 4 point-of-contact checked the water flow rate to the scrubber daily, and increased the flow as necessary to maintain adequate flow to the scrubber. From 19 April 1997 to 15 October 1997, the FTO unit operated for 2,617 hours, or approximately 56 percent of the time (Table 3.4).

Regular monthly maintenance for the Thermatrix FTO system is minimal. Because the unit is relatively simple to operate, AFP 4 personnel (technicians) can be trained to perform regular maintenance. Regular maintenance, which will require 1 to 3 hours per week, typically will include checking the supplemental fuel supply and emptying the condensate tank. If supplemental fuel is supplied from a storage tank, then fuel levels must be monitored, and a new supply ordered to ensure uninterrupted system operation. The condensate knock-out tank must be monitored and emptied on a regular basis. The scrubber requires regular maintenance and may require an additional 2 hours per week of monitoring and adjustment.

3.4 Technology Performance Summary

The treatment efficiency results indicate that the FTO unit was between 99.97- and 100-percent efficient at removing TCE from extracted soil vapors. The treatment efficiencies represent the percent reduction in concentrations of constituents detected by the laboratory in the FTO system influent and effluent vapor streams. The effluent caustic scrubber was effective in removing HCl to an average discharge rate of 0.057 and <0.040 lb/hr, as compared to the maximum allowable emission rate for HCl of 1.0 lb/hr.

The total cost for the FTO system monitoring and operation for a total of 180 days during the period from 15 April 1997 to 15 October 1997, was $128,484, which is equivalent to $714 per day (Table 3.3). During the field demonstration, a total of 572 pounds of TCE vapors was recovered from site soils during 109 days of vapor extraction. The treatment costs ranged from $136.06 per pound of THC recovered (based on 109 days of vapor extraction) to $224.70 per pound (based on 180 days on site). During this pilot study, influent TCE concentrations from the wells ranged from 67 to 170 ppmv.

Once the water inlet flow rate to the scrubber was increased to prevent shutdown of the unit due to water pressure fluctuations, the system was operational 100 percent of the time from 10 September 1997 to 15 October 1997, when the demonstration period concluded. Furthermore, two automatic shutdowns of the FTO unit occurred when the discharge pump/sump for the Building 181 water treatment system malfunctioned. The water treatment system failure prevented the FTO scrubber system, which was manifolded to this system, from discharging. The Thermatrix FTO system is designed to operate unmanned; however, approximately 12 hours per month should be anticipated for maintenance and monitoring activities. System checks, influent/effluent sampling, disposal of condensate, and supplemental fuel monitoring will require approximately 3 hours of technician labor each week, which is equivalent to approximately 12 hours per month.

Recommendations for improvements to the FTO unit would include an automated control for monitoring and maintaining influent oxygen concentrations at a minimum of 12-percent oxygen using ambient air. The automated oxygen control meter should be tied into the ambient air bleed-in valve. The flow rate of water to the scrubber system should be maintained above 0.7 gpm to prevent system shut down due to minor water pressure fluctuations. Also, the discharge from the FTO scrubber system should be manifolded to a reliable discharge point equipped to handle a continuous discharge.

Based on the DREs and regulatory scrubber HCl emissions requirements, the FTO unit was an effective method for treating TCE-contaminated vapors at Building 181. However, the Building 181 SVE system was pilot-scale, and was not designed to effectively extract soil vapor. The existing Building 181 SVE system extracts soil vapor from the vadose zone soils that are exposed in 2-inch-diameter groundwater monitoring wells. When a vacuum is applied to the wells, the groundwater in the well rises, and the length of screen exposed to vadose zone (approximately 2 feet) soils decreases, which reduces vapor flow.

Based on a flow rate of 105 cfm and an average TCE influent concentration of 120 ppmv [660 micrograms per liter (μg/L)], the TCE mass flow rate using the pilot-scale SVE wells is approximately 0.3 lb/hr. Jacobs Engineering Group, Inc. (Jacobs, 1997) is currently evaluating the existing SVEPP design to include improvements for a new SVE system at Building 181 that will have estimated TCE mass flow rates ranging from 6.4 to 8.5 lb/hr, based on an expected influent TCE concentration of approximately 350 ppmv (1,950 μg/L), and flow rates ranging from 850 to 1,140 scfm. If the estimated TCE concentrations used for the Jacobs (1997) full-scale design are assumed, the FTO would have removed approximately 1,950 pounds of TCE during the 180-day

demonstration period, which would result in a cost per pound of TCE removed of $65.91 ($714 x 180 days/1,950 pounds).

4.0 FULL-SCALE VAPOR RECOVERY AND TREATMENT FOR BUILDING 181

This section evaluates full-scale design considerations for SVE and alternatives for soil vapor treatment at Building 181 at AFP 4.

4.1 Full-Scale Design Considerations

Test data necessary for full-scale design of an SVE and treatment system include vapor extraction rates, soil vapor VOC and oxygen concentrations, and required air emissions permitting requirements. These data are presented in Tables 3.1 and 3.2. The air emissions requirements for a full-scale SVE system are intended to allow operation under the current version of the TNRCC Special Emissions Exemption, Texas Administrative Code Title 30, Chapter 106 (Jacobs, 1997). The maximum TNRCC allowable emissions for TCE and HCl are 3.34 lb/hr and 0.0247 lb/hr, respectively. The VOC (TCE) emissions limit would need to be evaluated based on current AFP 4 plant-wide VOC emissions (cumulative). The maximum HCl emission rate of 0.0247 lb/hr cannot be exceeded, as stipulated in TNRCC Special Emissions Exemption Permit requirements.

Remedial action is required for the vadose zone soils at Building 181 to limit further contamination migration into the Terrace Alluvium groundwater. The selected remedial action for the Building 181 source soils requires using SVE to remove TCE from the vadose soil. Jacobs (1997) performed a technical analysis on the existing pilot-scale SVE system and has begun work on designing a full-scale SVE system. The expanded SVE system would consist of 5 or 10 dual-phase extraction wells to be installed beneath Building 181. The extracted vapor flow rate would increase to either 850 cfm or 1,140 cfm. The system also would operate 24 hours per day under the current version of the emissions exemption plan.

Jacobs (1997) identified three SVE treatment alternatives: catalytic oxidation, thermal oxidation, and using an innovative physical, biological, or chemical process followed by GAC treatment. Appendix D presents a request for price quotations and the vendor evaluation summary prepared by Jacobs. The vendor quotes were received by Jacobs in June 1997. The proposed costs were compared for a 5- and 12-year operational periods.

4.2 Technical Cost Comparison of Vapor Treatment Technologies

A technical cost comparison was developed for three soil vapor treatment technologies, including catalytic oxidation, thermal oxidation (includes FTO), and an innovative technology in series with activated carbon. The purpose of the cost comparison was to develop an approximate range of expected costs for treating extracted soil vapors at Building 181 over 5- and 12-year periods.

Vendors were requested by Jacobs (1997) to provide price quotes for soil vapor treatment systems assuming soil vapor flow rates of 850 and 1,140 scfm, average influent TCE concentration of 1,950 ppmv, and a required DRE of 90 percent or greater for all VOCs. Based on 850-cfm and 1,140-cfm flow rates, the expected chemical mass recovery rates for TCE are 153 lb/day (70 kilograms per day) and 203 lb/day (92 kilograms per day), respectively. Vapor concentrations of specific chemical constituents detected at the site during the FTO demonstration are listed in Table 3.1 and in Appendix C. The Jacobs (1997) vendor price quotes for soil vapor treatment systems are presented in Appendix D.

The results of the comparative cost evaluation are summarized in Table 4.1. The results of the cumulative cost comparison show that over a 5-year period of operation, capital and operation and maintenance costs for a 1,140-cfm thermal, catalytic, or an innovative SVE treatment technology range from $345,080 to $811,035. For an 850-cfm treatment system, the 5-year present-worth costs range from $280,680 to $689,383. The innovative technologies had less favorable cost advantages due to the consumption rates of GAC required to meet the emissions permit exemption (Jacobs, 1997). The 5-year cost for the 1,140-scfm innovative technologies with activated carbon treatment ranged from $510,020 to $811,035. However, the GAC usage estimated by Jacobs may be overly conservative based on 95 to 99 percent VOC removal by the innovative technology prior to GAC treatment.

Although the capital costs for the Thermatrix FTO full-scale system were the highest based on the price quotes obtained by Jacobs (1997), the total annual O&M costs were among the lowest compared to all other technologies (Table 4.1). In December 1997, Thermatrix, Inc. provided Parsons ES a revised quote for their GS series FTO system including a 50 percent effective heat exchanger and scrubber. Based on this quote, the capital cost for the 850-cfm and 1,140-cfm treatment system would be $373,400 and $403,400, respectively. This reduces the capital cost of the Thermatrix FTO treatment system by $84,600 and $56,400 for the 850-cfm and 1,140-cfm units, respectively. A comparative cost evaluation based on this revised quote is included in Table 4.1.

Thermatrix was the only vendor claming a VOC DRE of 99.99 percent; the other vendor estimated DREs ranged from 90 percent to 99 percent. Several vendor quotes did not include the DRE of the HCl vapor using their scrubber, therefore the total costs could vary in order to meet the stringent state regulatory HCl emission limit of 0.0247 lb/hr at this site. Other factors that could play a role in selecting the best technology for this site are the maximum VOC emissions allowed at this site (because total VOC emissions are tied to a plant-wide VOC limit) and life expectancy of the project. A major factor that increases the Thermatrix FTO costs are the materials of construction that include upgraded, corrosion-resistant materials in the oxidizer to handle the HCl loading and to provide the requested 12-year system life.

The costs of treating TCE at a flow rate of 1,140 cfm using the thermal, catalytic, or innovative treatment with carbon range from approximately $0.93 to $2.19 per pound over a 5-year period, and approximately $0.56 to $1.65 per pound over a 12-year period of operation. The treatment cost per pound decreases between the 5- and 12-

TABLE 4.1
COST COMPARISON OF FULL-SCALE VAPOR TREATMENT TECHNOLOGIES
FLAMELESS THERMAL OXIDATION DEMONSTRATION
BUILDING 181
AIR FORCE PLANT 4, TEXAS

SVE Treatment Alternative	Vapor Treatment Vendor	Influent Flow Rate (scfm)	Capital Cost	Total Annual Operation and Maintenance Cost	5-Year Present Worth Cost	5-Year Present Worth Cost per Pound of TCE Treated	12-Year Present Worth Cost	12-Year Present Worth Cost per Pound of TCE Treated
Catalytic Oxidation	**Catalytic Combustion**	850[a/]	$155,940	$28,020	$280,679	$1.01	$418,911	$0.63
		1140[b/]	$173,730	$38,490	$345,080	$0.93	$534,962	$0.60
	E Products Catalytic Oxidation	850	$168,760	$63,780	$452,696	$1.62	$767,342	$1.15
		1,140	$168,760	$84,260	$543,869	$1.47	$959,549	$1.08
	Global Catalytic Oxidation	850	$189,800	$20,850	$282,620	$1.01	$385,479	$0.58
		1,140	$249,700	$26,540	$367,851	$0.99	$498,781	$0.56
	EviroReps Catalytic Oxidation	850	$196,000	$63,780	$479,936	$1.72	$794,582	$1.19
		1,140	$247,000	$84,260	$622,109	$1.68	$1,037,789	$1.17
Thermal Oxidation	**Thermatrix Flamless Oxidizer**	850	$458,400	$32,370	$602,511	$2.16	$762,196	$1.14
		1,140	$458,400	$43,330	$651,292	$1.76	$865,056	$0.97
	Thermatrix Flamless Oxidizer[c/]	850	$373,400	$32,370	$517,511	$1.85	$677,196	$1.01
		1,140	$403,400	$43,330	$596,305	$1.60	$810,056	$0.91
	E Products Thermal Oxidizer	850	$143,760	$87,470	$533,159	$1.91	$964,675	$1.44
		1,140	$143,760	$116,030	$660,302	$1.78	$1,232,713	$1.39
	EviroReps Thermal Oxidizer	850	$190,000	$87,450	$579,310	$2.07	$1,010,727	$1.51
		1,140	$207,000	$116,030	$723,542	$1.95	$1,295,953	$1.46
Innovative with Carbon Treatment	**Carbon Resources**	850	$85,140	$81,100	$446,181	$1.60	$846,272	$1.26
		1,140	$101,140	$107,020	$577,572	$1.56	$1,105,533	$1.24
	Thermatrix Padre	850	$206,800	$95,720	$632,926	$2.27	$1,105,142	$1.65
		1,140	$297,800	$47,670	$510,017	$1.38	$745,188	$0.84
	PTI MIAB Concentrator	850	$206,770	$102,860	$664,682	$2.38	$1,172,121	$1.75
		1,140	$219,970	$132,770	$811,035	$2.19	$1,466,030	$1.65
	PTI MIAB Photocatalytic	850	$331,770	$80,330	$689,383	$2.47	$1,085,675	$1.62
		1,140	$344,970	$99,740	$788,993	$2.13	$1,281,040	$1.44

Source: Based on data presented by Jacobs (1997); capital and operation/maintenance costs rounded to nearest $10.

[a/] The cost per pound of TCE treated equals the cumulative costs divided by the cumulative number of days of operation, assuming a mass recovery of TCE at 153 lb/day, and vapor flow rate of 850 scfm.

[b/] The cost per pound of TCE treated equals the cumulative costs divided by the cumulative number of days of operation, assuming a mass recovery of TCE at 203 lb/day, and vapor flow rate of 1,140 scfm.

[c/] Source: Based on quote received by Parsons ES from Thermatrix, Inc. (Rick Scheig), in December 1997.

year operating periods because the cumulative mass of chemical recovered increases at a faster rate than the cumulative annual cost.

The treatment cost per pound of TCE treated was estimated for each of the full-scale treatment technologies by dividing the cumulative annual cost of treatment by the cumulative annual mass of chemical recovered [i.e., Table 4.1, catalytic combustion treatment cost per pound for year 5 was calculated as follows: ($345,080 / (203 lb/day x 365 days/year x 5 year) = $0.93/lb)]. The full-scale mass VOC recovery rate is based on an estimated average TCE soil vapor concentration of 1,950 ppmv and a soil vapor extraction rate of 1,140 cfm.

The treatment cost per pound observed during the FTO technology demonstration cannot be compared directly to the treatment cost per pound for a full-scale system. Differences in treatment costs per pound between the technology demonstration and the full-scale system are due to the non-linear relationship between capital costs for each system, and differences in the mass recovery rates. Mass recovery rates are a function of the vapor recovery rate and average soil vapor concentration. Furthermore, the SVE system used during the FTO demonstration was not able to adequately extract contaminated soil vapor because of the use of 2-inch-diameter wells screened partially below the groundwater table.

After the full-scale SVE system is installed, additional soil vapor testing should be performed to ensure that the full-scale TCE loading rates can be attained. The most appropriate vapor treatment technology will be a function of the duration that the system will be operated and the expected change in soil vapor VOC concentrations over that time period. Consideration also would need to be given to other factors such as the air emissions permit requirements, vendor product warranties, durability of system components, component replacement costs and frequency of replacement, and overall vendor reliability.

5.0 REFERENCES

Environmental Science & Engineering, Inc. (ESE), 1994a. *Final Report Summary of Remediation Projects at Air Force Plant 4 and Carswell AFB.* July.

ESE. 1994b. *Soil Vapor Extraction Pilot Plant Study, Building 181, Fort Worth Texas.* July.

Hargis & Associates, Inc., (Hargis). 1992. *Soil and Groundwater Assessment, Building 181, US Air Force Plant 4. General Dynamics, Inc. Fort Worth, Texas.*

Jacobs Engineering Group, Inc. (Jacobs). 1997. *Draft Remedial Design Work Plan, Air Force Plant 4, Fort Worth*, Texas. July.

Meltzer, J.S. 1992. *Flashback Testing of Thermatrix ES-60H Oxidizer.* Report No. SSR-1628, Fenwal Safety Systems, Inc., Marlborough, MA.

MERCK and Co., Inc. 1983.

Parsons Engineering Science, Inc. (Parsons ES) 1996a. *Final Work Plan for the Evaluation of Flameless Thermal Oxidation at Air Force Plant 4 (AFP 4), Fort Worth, Texas*. January.

Parsons ES. 1996b. *Final Interim Site-Specific Technical Report for the Evaluation of Thermatrix GS Series Flameless Thermal Oxidizer for Off-Gas Treatment of Trihloroethene Vapors at Air Force Plant 4, Fort Worth, Texas*. August.

Thermatrix, Inc. 1992. Destruction of Organic Compounds in the Thermatrix Flameless Thermal Oxidizer. San Jose, California.

US Environmental Protection Agency (USEPA). 1995. *Guide to Documenting Cost Performance for Remediation Projects*. Federal Remediation Technologies Roundtable. EPA-542-B-95-002. March.

APPENDIX A

PIPING AND INSTRUMENTATION DIAGRAMS AND VENDOR INFORMATION

SX-210	T-120	T-150	B-210	SX-240	MX-280	R-330	R-310	DX-500 A/B	DX-510 A/B	PA-810
FILTER/SILENCER	K.O. POT	PROPANE TANK	AIR/FUME BLOWER 3" X 3"	SPARGER	STATIC MIXER	PREHEATER	THERMAL OXIDIZER	BLIND AND GOGGLE	CROSSOVER DUCT	CONTROL PANEL

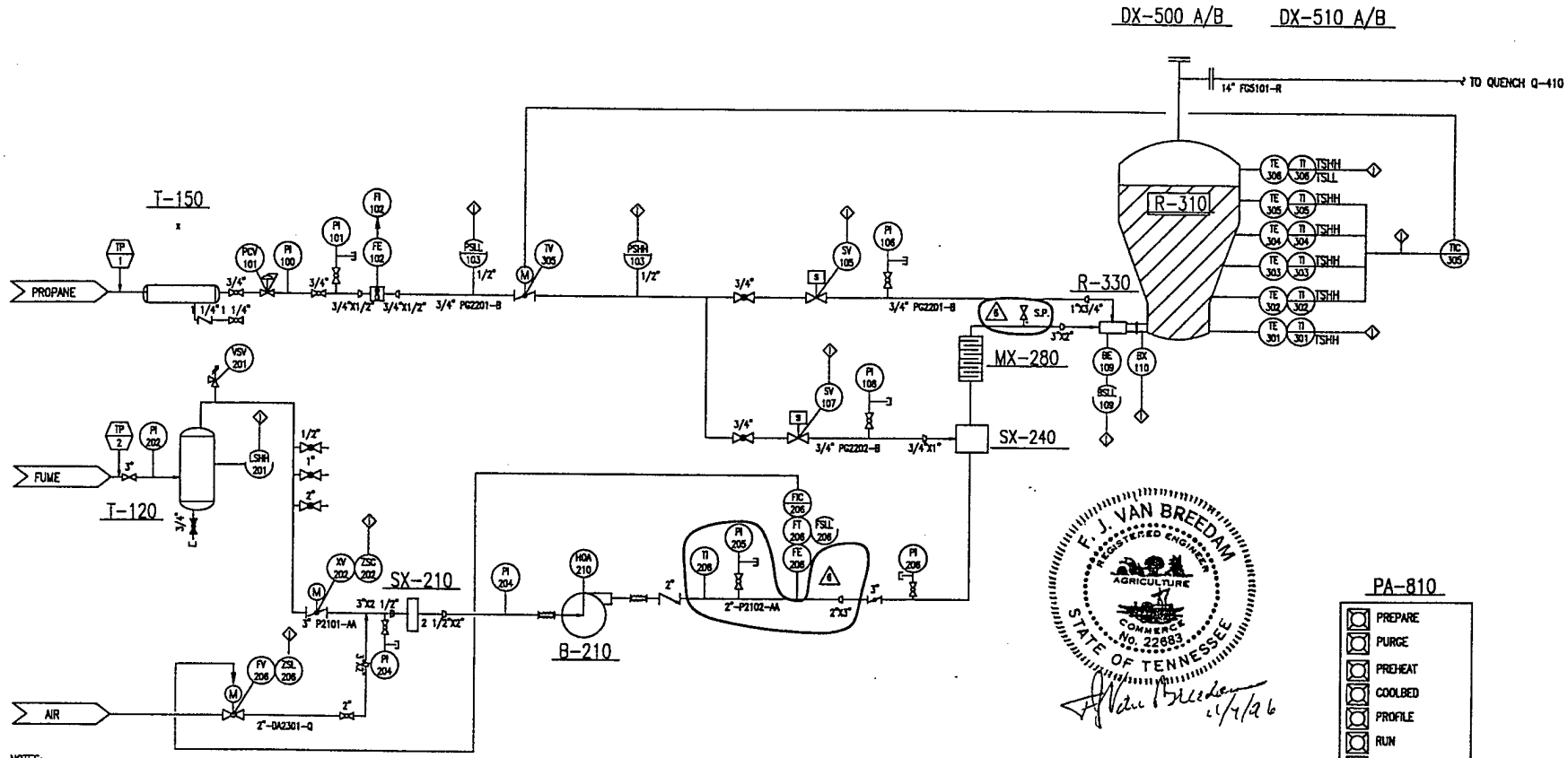

NOTES:

1. AREA CLASSIFICATION IS GENERAL SERVICE
2. INSTRUMENT AIR IS NOT AVAILABLE
3. ESD KILLS ALL SKID OERATIONS

F. J. VAN BREEDAM
REGISTERED ENGINEER
AGRICULTURE
COMMERCE
No. 22683
STATE OF TENNESSEE

F. Van Breedam 11/7/96

PA-810

- PREPARE
- PURGE
- PREHEAT
- COOLBED
- PROFILE
- RUN
- SHUTDOWN

E.C.N.	REV	DESCRIPTION	DATE	APV
	6	AS BUILT	10-26-96	JLM
	5	MECHANICAL REVISIONS	7-19-96	CBZ
	4	MECHANICAL UPDATES	2-8-96	CBZ
	3	CLIENT AND ENGINEERING CHANGES	1-23-96	JAN
	2	ENGINEERING REVISIONS	11-28-95	JAN
	1	REVISED PER CLIENT COMMENTS	11-09-95	JAN
	0	INITIAL RELEASE	11-01-95	JAN

THIS DRAWING CONTAINS PROPRIETARY INFORMATION WHICH IS TO BE HELD CONFIDENTIAL AND NOT MAY BE REPRODUCED, OR DISCLOSED TO THIRD PARTIES WITHOUT THE PRIOR WRITTEN CONSENT OF THERMATRIX INC.

THERMATRIX
SAN JOSE, CA 95134
KNOXVILLE, TN 37922

PARSONS, DENVER, CO

PIPING AND INSTRUMENTATION DIAGRAM

DRAWN CBZ
CHK JAN 11/26/96
APV JB 11/26/96
DATE JAN
DATE 10/17/95

SIZE D
COPYRIGHT 1994
DRAWING NO. J-3780-000-P401
REV 6
SCALE
DO NOT SCALE DRAWING
SHEET OF

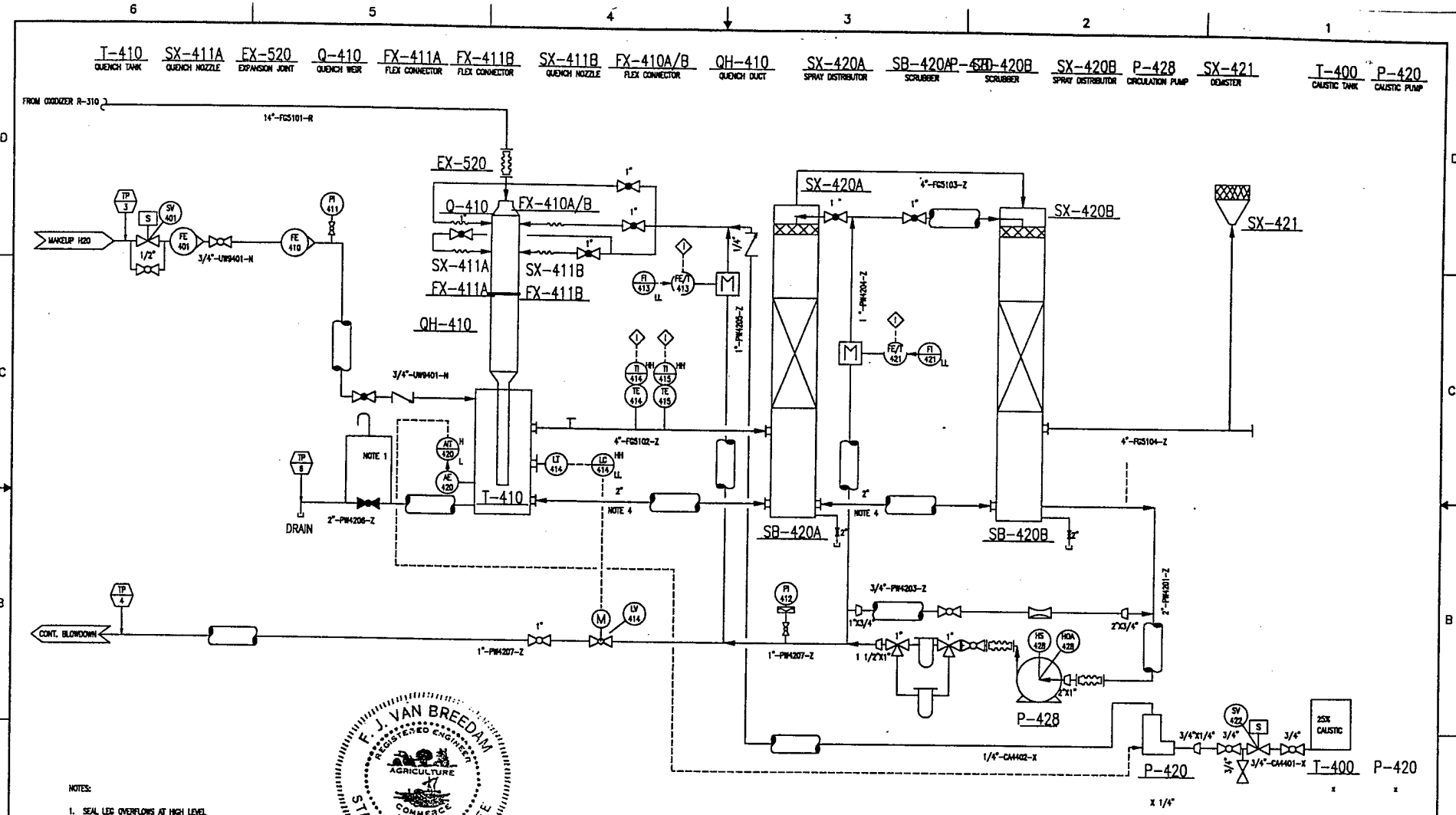

NOTES:

1. SEAL LEG OVERFLOWS AT HIGH LEVEL
2. INSTRUMENT AIR IS NOT AVAILABLE
3. COMMON SUMP TIE LINE
4. AREA CLASSIFICATION IS GENERAL SERVICE

F. J. VAN BREEDAM
REGISTERED ENGINEER
AGRICULTURE
COMMERCE
No. 22683
STATE OF TENNESSEE

F. Van Breedam 12/9/96

E.C.N.	REV	DESCRIPTION	DATE	APV
	6	AS BUILTS	10-26-96	CBZ
	5	MECHANICAL REVISIONS	7-19-96	CBZ
	4	MECHANICAL UPDATES	2-8-96	CBZ
	3	CLIENT AND ENGINEERING REVISIONS	1-23-96	JAN
	2	ENGINEERING REVISIONS	11-28-95	JAN
	1	REVISED PER CLIENT COMMENTS	11-09-95	JAN
	0	INITIAL RELEASE	11-01-95	JAN

THIS DRAWING CONTAINS PROPRIETARY INFORMATION WHICH IS TO BE HELD CONFIDENTIAL AND MAY NOT BE REPRODUCED, OR DISCLOSED TO OTHERS WITHOUT THE PRIOR WRITTEN CONSENT OF THERMATRIX INC. OR DULY AUTHORIZED REPRESENTATIVE THEREOF.

PROJECT: USAF/PARSONS

Thermatrix Inc.
KNOXVILLE, TN 37922
SAN JOSE, CA 95134

TITLE: PIPING AND INSTRUMENT DIAGRAM

DRAWN BY	JLM	DATE 11-1-95
CHKD BY	JD	DATE 11-1-95
REVIW BY	JAN	DATE 11-1-95
APPD BY	JAN	DATE 11-1-95

Drawing # J-3780-000-P402 6

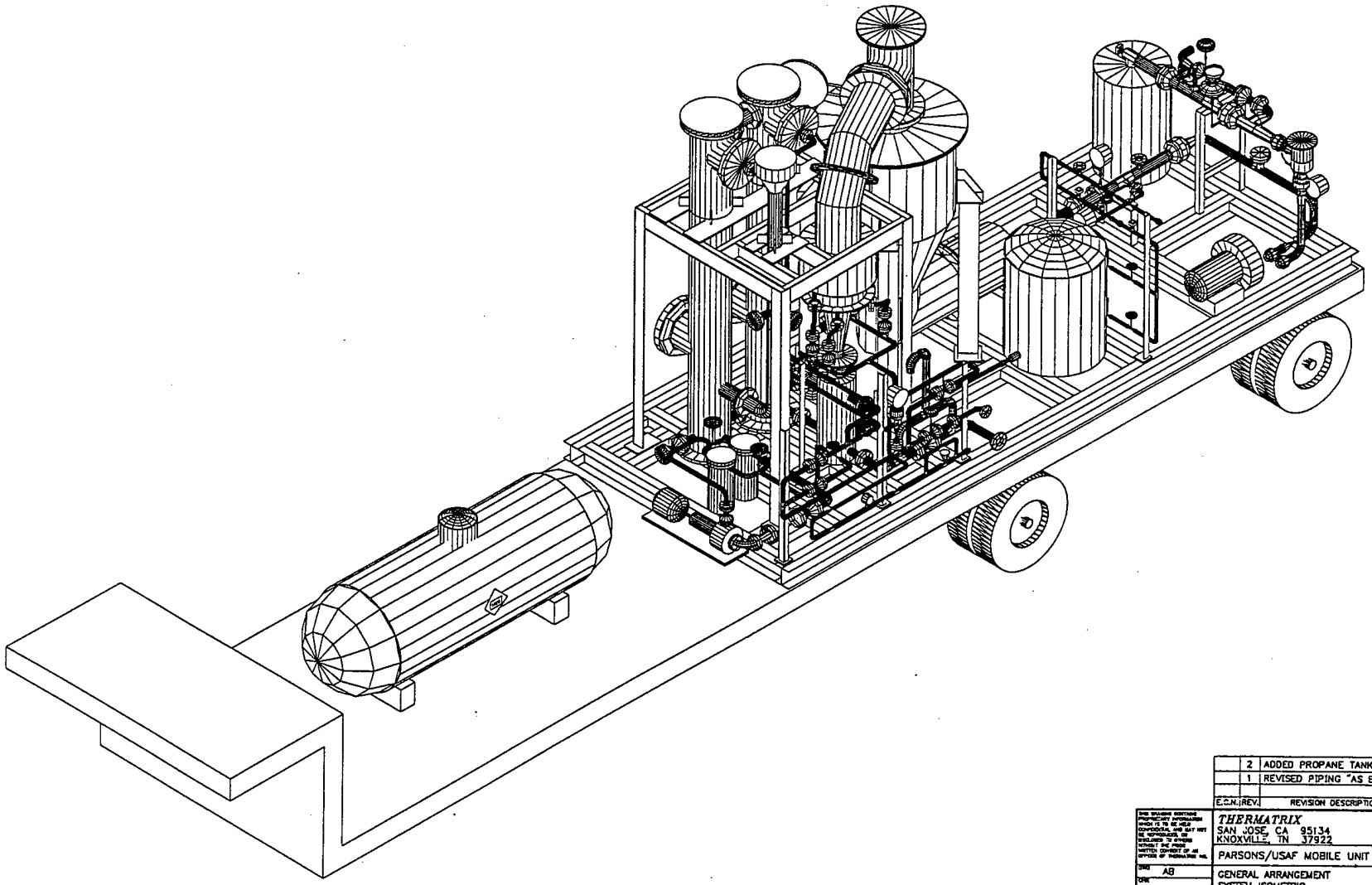

E.C.N.	REV.	REVISION DESCRIPTION	DATE	APV
	2	ADDED PROPANE TANK	11/13/96	
	1	REVISED PIPING "AS BUILT"	11/4/96	

THIS DRAWING CONTAINS PROPRIETARY INFORMATION WHICH IS TO BE HELD CONFIDENTIAL AND MAY NOT BE COPIED OR DISCLOSED TO OTHERS WITHOUT THE PRIOR WRITTEN CONSENT OF THE OFFICER OF THERMATRIX INC.

DWN AB
CHK
ENG
MGR
ENG
MGR
DATE 1-30-96

THERMATRIX
SAN JOSE, CA 95134
KNOXVILLE, TN 37922

PARSONS/USAF MOBILE UNIT

GENERAL ARRANGEMENT
SYSTEM ISOMETRIC

SIZE D | COPYRIGHT 1996 | DRAWING NO. J-378-000-M71 | REV. 2

SCALE: AS NOTED | SHEET 1 OF 3

Thermatrix Inc.

...Technology beyond Compliance

Flameless Thermal Oxidizers for VOC and HAP Control

GS Series: Gas Preheated, "Straight-through" design

Features:
- Guaranteed 99.99% VOC Destruction, including Chlorinated compounds
- Ultra Low NOx...below 2 ppm
- Approved for use in flameproof areas
- Best on fumes with richer VOC concentrations
- Available with top down or bottom up preheat

Typical Applications: Process vents, Wastewater treatment, Remediation, Fuel storage and transfer.

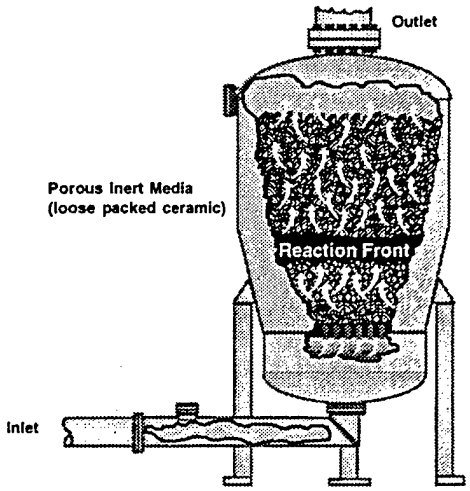

GR Series: Gas Preheated, with "Internal Heat Recovery"

Features:
- Guaranteed 99.99% VOC Destruction, including Chlorinated compounds
- Ultra low NOx...below 2 ppm
- Approved for use in flameproof areas
- Best on fume streams with leaner VOC concentrations

Typical Applications: Process vents, Wastewater treatment, Thermal Desorber off-gas treatment, Paint Booths

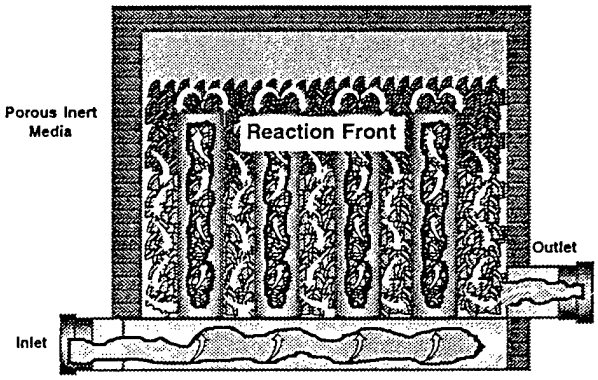

ES Series: Electric Preheated, "Straight-through" design

Features:
- Guaranteed 99.99% VOC Destruction, including Chlorinated compounds
- Ultra low NOx...less than 2 ppm
- Approved for use in flameproof areas
- Best on VOC streams below 500 scfm

Typical Applications: Wastewater treatment, Process vents, Fugitive emissions, Remediation

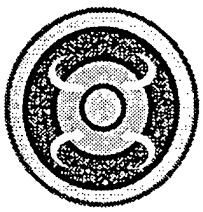

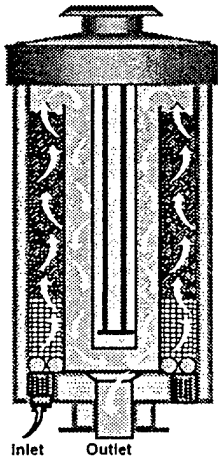

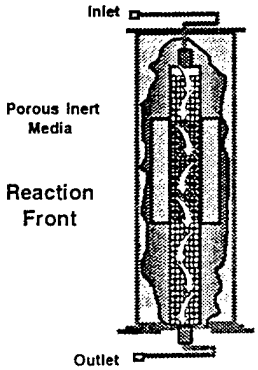

San Jose, CA	Knoxville, TN	Mount Laurel, NJ	Naperville, IL	Houston, TX	London, England
Tel: (408) 453-0490	Tel: (423) 539-9603	Tel: (609) 727-5313	Tel: (708) 717-2911	Tel: (713) 397-0474	Tel: 011 44 71 369 9191
Fax: (408) 453-0492	Fax: (423) 539-9643	Fax: (609) 727-5351	Fax: (708) 717-0284	Fax: (713) 580-6720	Fax: 011 44 71 361 9192

Halogenated VOC Abatement

FLAMELESS THERMAL OXIDATION

INTRODUCTION

A major chemical company has installed (1995) and is operating a Thermatrix flameless thermal oxidation system for treatment of methylene chloride emissions from herbicide production. Prior to this installation, traditional flame-based technology was the corporate standard for this application.

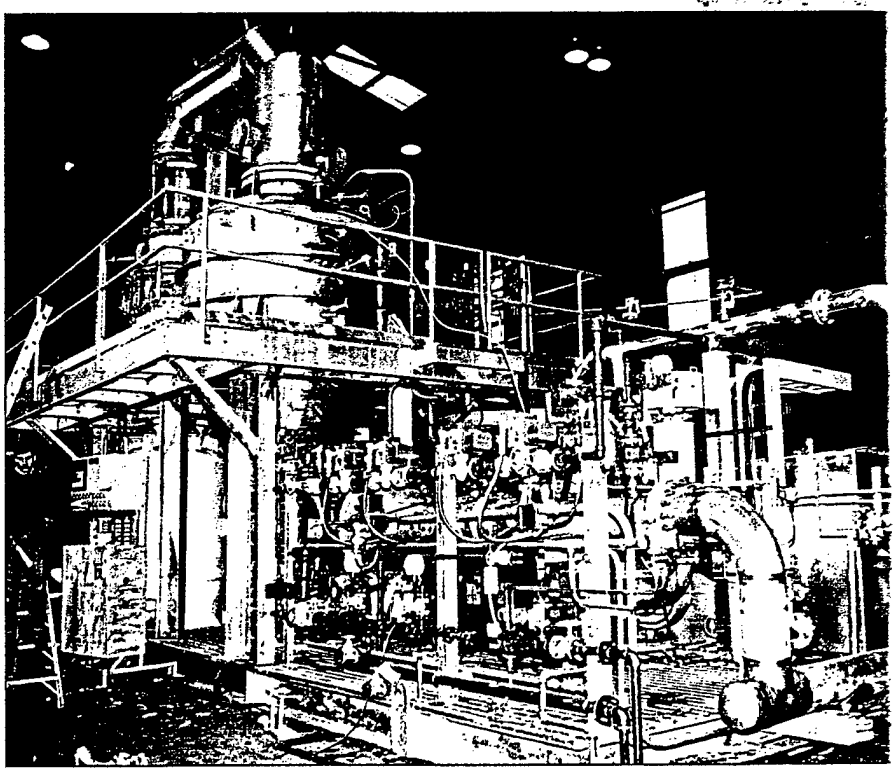

FLAMELESS THERMAL OXIDIZER SYSTEM FOR HERBICIDE PLANT CVOCS
FULLY AUTOMATED, HIGH ALLOY REACTOR WITH QUENCH
1500 SCFM TOTAL FLOW

PROCESS DESCRIPTION

The herbicide manufacturing process consists of various unit operations that continuously or intermittently vent process gases containing chlorinated VOCs. The combined vent stream includes 275 pounds per hour methylene chloride, six pounds per hour CO, and traces of methanol, formaldehyde and dichloromethyl ether. Venting results from equipment de-pressurization, controlled process venting, equipment purges, batch chemical transfers and normal breathing losses. Vents are collected and routed to the Thermatrix system for treatment.

THERMATRIX SYSTEM DESCRIPTION

The skid-mounted, fully automated abatement system consists of a Thermatrix reactor and an effluent gas quench which feeds directly to a pre-existing scrubber system. The system is designed for a total flow of 1500 scfm. Prior to shipping, the system was preassembled and modularized to the extent possible to minimize on-site installation work scope.

The system is fed by two vent collection headers which are combined immediately prior to entering the main fume line. Both streams are water saturated, with one containing high concentrations of VOCs inerted with nitrogen to reduce flammability. The second stream contains relatively low concentrations of VOCs and is continuously purged with air.

During operation, combustion air is added to the combined vent streams in the main fume line to maintain a minimum oxygen concentration. The premixed fume is then introduced to the Thermatrix reactor, where the organics are oxidized to carbon dioxide and water vapor. An acid gas (HCl) is produced and quenched, then sent directly to a pre-existing caustic scrubber for neutralization. All materials of construction are appropriate for the processing of corrosive gases.

INSTALLATION, COMMISSIONING & PERFORMANCE TESTING

On-site installation was completed in less than 6 days. Performance testing and analysis were performed by a laboratory using EPA test protocol methods 18 and 25. Inlet samples containing up to 300 ppm of total hydrocarbons were taken from the main fume line. Outlet samples collected at the stack revealed undetectable hydrocarbons at a 1 ppm detection limit.

A TOTAL SOLUTION

This Thermatrix application has been field proven to be safe, economical and effective. Direct comparison with alternative technologies reveals similar capital costs with significantly lower operating costs, higher DRE, and improved on-line availability. The demonstrated advantages of the technology helped facilitate the permitting process while providing a total solution for this client's "hard to treat" CVOC abatement application.

Thermatrix Inc.

...Technology Beyond Compliance

Flameless Thermal Oxidation

TECHNOLOGY BEYOND COMPLIANCE

COST EFFECTIVE TECHNOLOGY INTEGRATION

Flameless Thermal Oxidation can be effectively utilized over a wide range of organic abatement applications. The unique advantages of the technology make possible cost saving emission control approaches not traditionally associated with VOC abatement. The safety and scalability of the flameless Thermatrix device allows for placement in flameproof areas treating smaller, more concentrated point sources. This, coupled with high DREs, can often significantly reduce the total volume of emissions treated while still attaining overall emission reduction goals.

FLAMELESS THERMAL OXIDATION ADVANTAGES:

- Guaranteed 99.99% DRE, including halogenated organics
- Ultra low NOx... less than 2 ppm
- Destructive process produces no secondary organic waste stream
- Energy efficient operation, self-sustaining down to 10 BTU/cf^3 in fume
- Approved for classified areas... can be located directly at emission source
- Stable operation when responding to variable organic loading
- Matrix is completely inert, with no catalysts to foul
- Superior turndown capability better addresses minimum baseload conditions, reducing operating costs
- Easily permitted... no continuous emission monitoring required
- Creates potential for emission credits

THE TOTAL SOLUTION

Thermatrix has the engineering experience and expertise to provide a total solution to your environmental problem. We specialize in full-scale, "turnkey" VOC abatement systems.

Thermatrix systems are simple, robust, highly efficient and can provide unique cost savings not possible with more traditional emission control approaches. In many industrial applications, life cycle costs have been field proven to be significantly lower than alternative solutions. Whether you need to replace an existing, more expensive technology or control new emissions from expanding production, call us today and let Thermatrix cost effectively take you to the next level...*beyond compliance.*

Thermatrix Inc.

...Technology Beyond Compliance

Thermatrix Technology Description

FLAMELESS THERMAL OXIDATION

TECHNOLOGY BEYOND COMPLIANCE

Thermatrix Inc. has developed an innovative technology which has been field proven to consistently achieve VOC and HAP destruction/removal efficiencies (DREs) of 99.99% or greater. This unique, flameless technology provides safe, cost effective treatment of a wide range of industrial pollutants. Only the Thermatrix process is able to guarantee greater than 99.99% destruction efficiencies *and* ultra low NOx emissions, typically below 2 ppm.

Thermatrix technology exhibits significant advantages over traditional treatment technologies. These advantages allow our clients to take a fundamentally different approach to process emission control. Thermatrix systems, due to their safety and stability, can be located directly in the client's process at the source of emission. This cost effective, pollution prevention approach can dramatically reduce the volume of emissions treated while achieving maximum reduction in overall emissions. Cost savings are realized by the installation of smaller, more energy efficient systems while the high DRE can favorably influence emission averaging and even provide emission credits.

In the Thermatrix process, organic compounds are oxidized in an inert ceramic bed, without flames or catalysts, into harmless carbon dioxide and water vapor or easily neutralized acid gases. While traditional flame-based thermal oxidation relies on the flame for both fume mixing and reaction, the Thermatrix process completely decouples fume mixing from the oxidation reaction. This allows greater flexibility and control and eliminates products of incomplete combustion (PICs). The absence of catalysts also avoids any chance of poisoning or sintering the matrix.

THE MATRIX

The basis for the Thermatrix process is a "porous inert matrix." This matrix fosters conditions necessary to establish a very efficient and stable reaction zone, allowing flameless oxidation of organic compounds outside their respective flammability limits. The rate of oxidation in this matrix is much faster than with traditional treatment technologies, rendering residence time a non-factor. Also, in contrast to catalytic oxidizers, pressure drop across the system is very low due to the high void space ratio (70%) in the matrix.

The three primary attributes of the porous inert matrix that promote flameless oxidation are its interstitial geometry (enhances mixing), thermal inertia (promotes stability), and surface characteristics (augments heat transfer). The thermal properties of the matrix allow the pre-reaction area, or "mixing zone," to be near ambient temperature while the reaction zone is at the appropriate oxidation temperatures.

The properties of the matrix allow for very effective abatement of halogenated organics. Halogenated organics do not effect destruction efficiency or system life, as appropriate corrosion resistant materials are used for each application. Post-reactor acid gas scrubbing can be provided as needed.

Maximum temperatures in the reaction zone remain well below those of a flame, resulting in extremely energy efficient operation with very low formation of thermal NOx. Using a porous inert matrix to support the oxidation reaction results in several performance, safety and process control related advantages.

THE PROCESS

During initial startup of the unit, the matrix is pre-heated and the desired temperature profile is established. Once in profile, the preheater is completely isolated from the system and fume processing can begin. As the fume enters the ambient mixing zone of the reactor, turbulence intimately mixes the hydrocarbons and air. The ambient mixing zone, with its large thermal mass, adds to the safety of the system by acting to prevent flashback. As the well-mixed, ambient stream moves through the matrix it is heated to oxidation temperature as it reaches the reaction zone. The matrix design physically forces the entire fume stream to pass through the reaction zone which ensures complete destruction of the organic compounds and results in consistently high DREs. Heat released by the exothermic oxidation reaction is absorbed by the matrix, providing the thermal momentum needed to maintain the process.

Emissions which vary widely in fume flow and concentration, as in batch chemical manufacturing, are ideally suited for the thermally efficient Thermatrix process. Energy, in the form of heat, is stored in the matrix between peaks in organic loading. This "buffering" capability enables the system to efficiently process fume on very short notice without additional energy input. For intermittent operations, such as those which shut down overnight or on weekends, air flow through the insulated reactor is significantly reduced to help maintain appropriate temperature profile. This operational stand-by, or "ready idle" mode, greatly reduces operating costs and prolongs system life by minimizing thermal cycling.

Control of the Thermatrix oxidizer is simple and straightforward. The same thermal inertia that buffers system reaction to fluctuating process conditions also provides ample response time to control the reaction. Process control components maintain desired operating temperatures by managing the heating value (enthalpy) of the incoming fume. For organic rich or oxygen deficient streams, dilution air is mixed with the fume to maintain the matrix at desired operating temperatures; for lean fume streams, supplemental energy is added to maintain the oxidation reaction. The typical process control scheme is a simple temperature loop controlling the addition of air or fuel to the incoming fume stream.

THE TOTAL SOLUTION

Thermatrix has the experience and expertise to provide total solutions for a wide range of environmental problems. We have designed, installed, and successfully operated full-scale, "turnkey" systems for numerous industrial applications.

Thermatrix systems are simple, robust, highly efficient and can provide unique cost savings not available with more traditional emission control approaches. In many industrial applications, life cycle costs have been field proven to be significantly lower than those of alternative solutions. Whether you need to replace an existing, more expensive technology or control new emissions from expanding production, call us today and let Thermatrix cost effectively take you to the next level...*beyond compliance.*

Applications of Thermatrix Flameless Oxidation Technology in the Treatment of VOCs and Hazardous Wastes

by

Robert G. Wilbourn
Marshall W. Allen
and
Alexander G. Baldwin

Thermatrix Inc.
308 N. Peters Road
Knoxville, Tennessee
(615) 539-9603

Presented at
International Incineration Conference
Seattle, Washington
May 8-12, 1995

APPLICATIONS OF THERMATRIX FLAMELESS OXIDATION TECHNOLOGY IN THE TREATMENT OF VOCS AND HAZARDOUS WASTES

Robert G. Wilbourn
Marshall W. Allen
and
Alexander G. Baldwin

Thermatrix Inc.

ABSTRACT

The Thermatrix thermal oxidation technology is a unique, flameless oxidation process that is accomplished in a packed-bed inert matrix. In just over two years of commercial application the technology has been shown effective in destroying a wide variety of organic compounds including chlorinated and sulfonated hydrocarbons. Performance testing conducted to date demonstrates the technology is capable of achieving destruction and removal efficiencies (DREs) in excess of 99.99% with the concurrent production of extremely low quantities of thermal NO_x and carbon monoxide.

The technology has been successfully applied in the treatment of: chlorinated hydrocarbons separated from waste water, fugitive emissions from spray painting operations, and volatile organic compound (VOC) emissions from refinery operations. This year successful treatment and remediation applications of the emerging Thermatrix oxidation technology have been extended. Current technology development and application project activities include: the treatment of VOCs and chlorinated organic compounds separated from contaminated soils, the processing of off-gases containing total reduced sulfur (TRS) compounds, the abatement of chemical vapor releases from manufacturing and refinery operations and on-going technology demonstrations at DOE and DOD sites.

This paper presents and summarizes: current technology development activities, advances in the design of treatment systems based on the Thermatrix thermal oxidation technology, and performance achievements in system operations at multiple project sites.

INTRODUCTION

The Thermatrix technology is a unique, proprietary, patented technology for the flameless thermal oxidation of noxious emissions which arise the normal course of operations in the oil and gas, chemical, pharmaceutical, manufacturing and environmental remediation industries. Thermatrix pioneered its thermal oxidation technology for the highly efficient, controlled, non-flame oxidation of VOCs in a ceramic matrix called a "packed bed". [1] The oxidation of organics occurs in a "reaction zone" contained within the bed of chemically inert ceramic materials typically operated at 1600-1850°F.

In its simplest form, the packed-bed device, shown in Figure 1, consists of an insulated cylinder containing a heated ceramic matrix. In operation, the VOC stream, and any air required to support the oxidation reaction is passed into the bottom of the preheated bed and moves upward through the matrix The temperature of the incoming gas rises as it picks up heat from the bed until the oxidation temperature of the organic is attained. Once the reaction temperature has been reached, the organics in the VOC stream oxidize creating a stabilized reaction zone as heat is given up to the surrounding matrix. The large thermal mass of the bed also enables it to store or release large amounts of heat without rapid changes in temperature. In many cases the VOC stream may already contain adequate heating value to sustain the bed temperatures. If needed, supplemental energy can be provided from either an electrical heater or by enriching the mixture with natural gas or propane.

Figure 2 schematically presents a basic technology enhancement, i.e., internal oxidation heat recuperation. Heat recuperation in a Thermatrix thermal oxidation unit is accomplished by flowing the incoming and exiting gases counter-currently with metal tube separation.[2] In this manner, heat produced during oxidation of the organic constituents is used to raise the temperature of the incoming gas mixture. This style of reactor provides operational and economic process advantages especially in the treatment of highly energetic feed streams, e.g., those streams containing organic compounds in concentrations near the lower explosive limit (L.E.L.).

TECHNOLOGY APPLICATIONS AND TEST RESULTS

Wastewater Treatment

In an effort to voluntarily reduce emissions, a chemical company identified a wastewater stream as a significant source of uncontrolled emissions. The wastewater is generated by steam jet eductors from a vacuum column used in a chemical manufacturing process. The condensed steam from the jet eductors is contaminated with 530 ppmw of ethyl chloride and smaller quantities of butyl chloride, benzyl chloride and non-chlorinated organics, primarily toluene.

The wastewater treatment project was on an extremely aggressive time line to meet corporate emission reduction deadlines. The project scope provided for the design, manufacture, and pre-assembly of a complete unitized, skidded system in less than eight weeks to allow on-site installation, commissioning and start-up to be completed within four weeks.

Thermatrix designed, fabricated and supplied a 100 scfm electrically heated reactor as part of the work scope for this client. The reactor was integrated into an abatement system consisting of an air stripper, knock-out pot, flameless oxidizer, HCl scrubbing system and fully automated controls.

Flameless Thermal Oxidizer

Figure 1

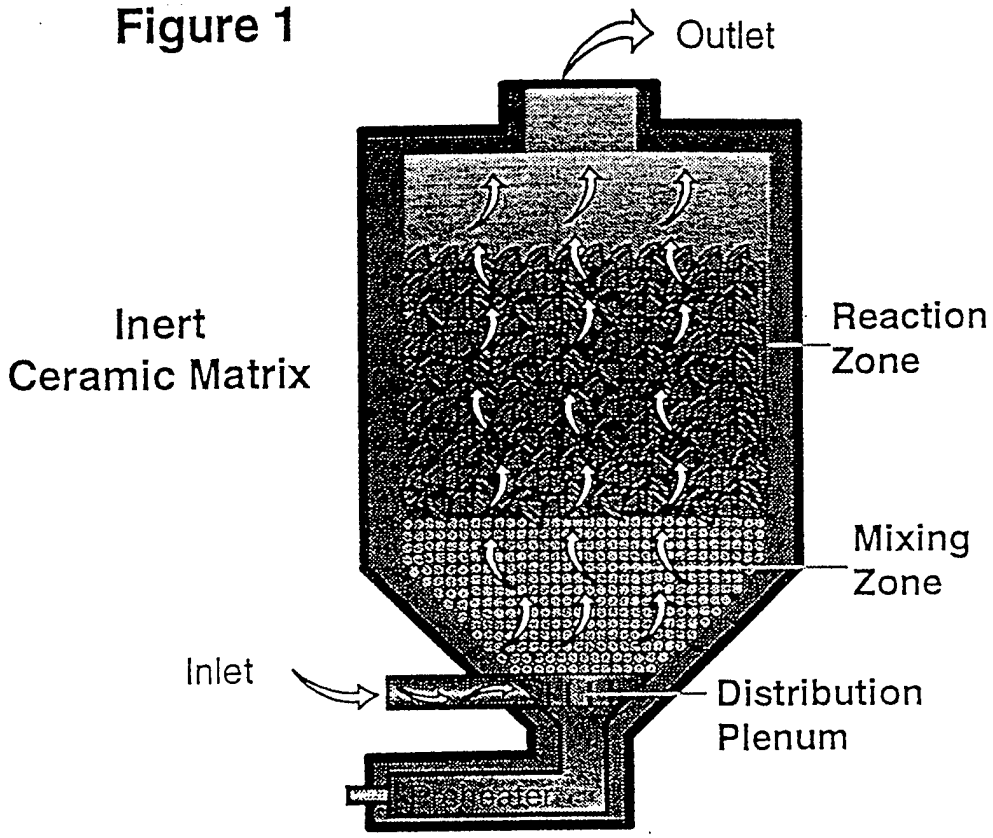

Flameless Thermal Oxidizer with Internal Heat Recovery

Figure 2

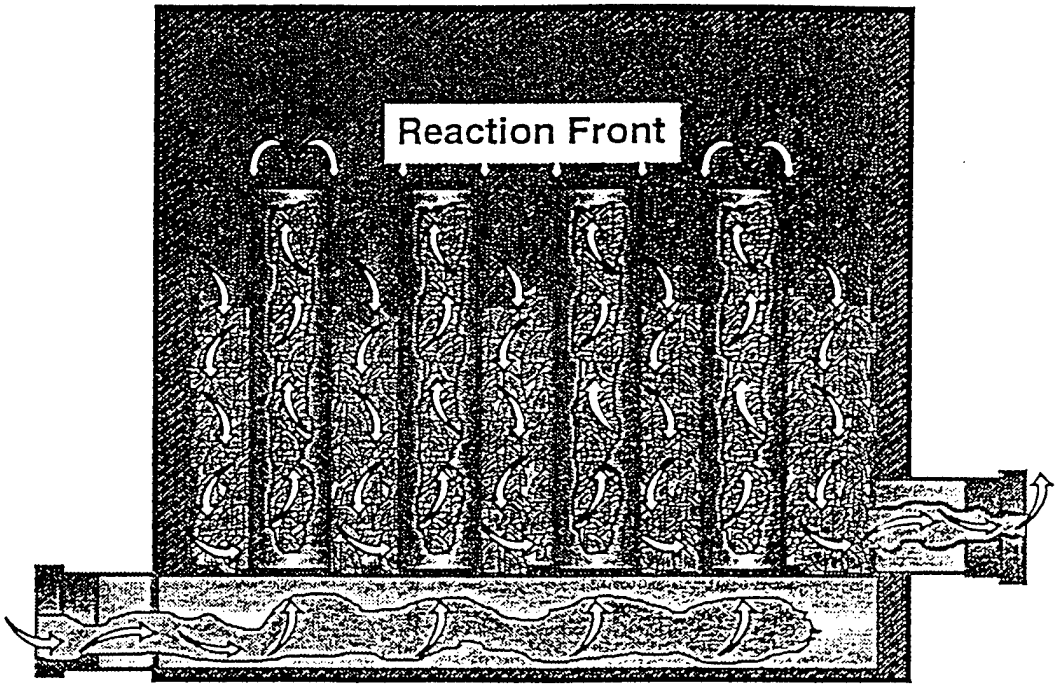

Approximately 50 gpm of wastewater is admitted to the air stripping column that is designed to remove 99.9% of the volatiles and produce a moist air stream containing the organics. The cleaned water is recycled to the plant, while the 100-scfm stripper off-gas is conveyed through a knock-out pot and demister before entering the flameless oxidizer, where 99.99% destruction of the organics has been demonstrated achievable. The oxidation reaction produces CO_2, H_2O and HCl. Upon exiting the oxidizer, the gases are quenched and admitted to the scrubbing tower, where 99% of the HCl gas is removed. The scrubber water is discharged from the system to the plant waste water system and the organic-free and acid-free gases exit the scrubber to atmosphere.

To minimize the on-site work scope, the treatment system was designed and pre-assembled complete with all piping, instrumentation and electric power systems. The on-site scope required only completing the few process piping tie ins, terminating a single power feeder and multi-conductor control cable, and erecting the stripping and scrubbing towers which are too tall to be transported in place. Pile foundations, field piping and electrical runs and certain site improvements were completed while the system was being manufactured.

The system was installed, started-up and commissioned without any significant delays. The system has been operating successfully since January 1993. The air permit for the system was issued by state authorities in 30 days.

Refinery Applications

API Separator Emission Treatment

A petroleum refining company contracted with Thermatrix to provide a thermal oxidation system which utilizes a recuperative unit to abate the hydrocarbon emissions from two American Petroleum Institute (API) separators. The project was driven by benzene National Emission Standards for Hazardous Air Pollutants (NESHAP's) for wastewater treatment (40 CFR 61, Subpart FF). A client obtained extension required that the facility be in full regulatory compliance by January 1995.

The project called for Thermatrix to provide a complete skid mounted system with internal heat recovery efficiency of no less that 65%. The thermal oxidation system treats the vapors from several locations in the plant which are manifolded into the suction of two sets of blowers and ducted to the thermal oxidation system. These sources include: two API oil/water separator covers and a number of skimmed oil sumps and slop oil tanks. Figure 3 is a process flow sheet overview of this application.

Thermatrix provided a modularized thermal oxidation system with a stack. Figure 4 shows the system general arrangement. The system is capable of processing 1250 scfm of plant emissions. Preliminary performance results are presented in Table 1 and demonstrate the capability of the system to meet established performance criteria.

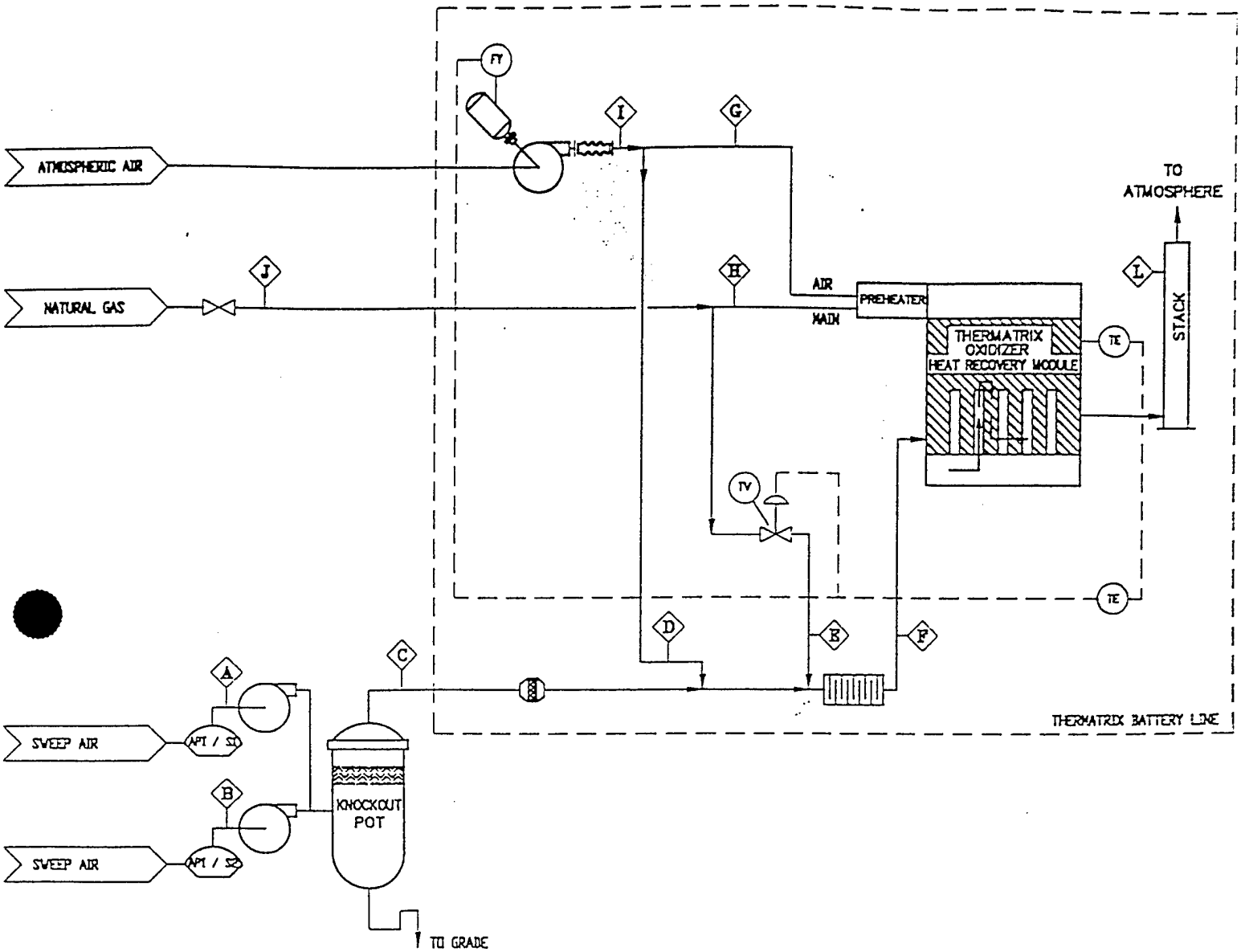

FIGURE 3

REFINERY API SEPARATOR EMISSION TREATMENT
PROCESS FLOW DIAGRAM

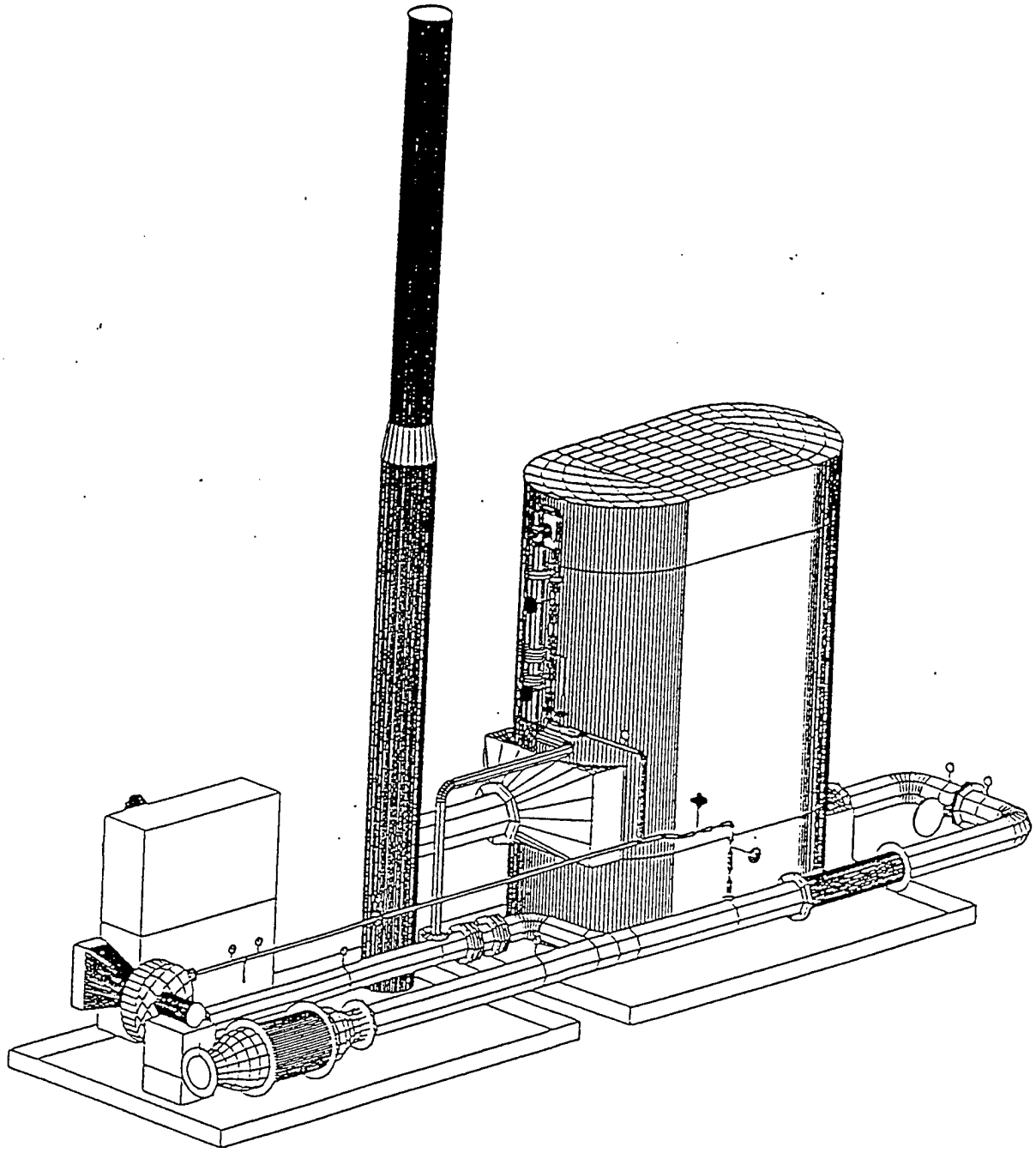

FIGURE 4

REFINERY API SEPARATOR EMISSION TREATMENT SYSTEM
GENERAL ARRANGEMENT

Table 1
Performance Summary
Thermatrix Oxidizer Treating API Separator Emissions

Sample	Total HC (ppmv)	% DRE	CO (ppmv)	%CO_2	%O_2	%N_2	%CH_4
Inlet	5200		<10	0.091	21	78	0.027
Outlet	(<5) ND	>99.9	<10	2.1	19	79	<0.0002

Oil Recycling

In 1994 Thermatrix supplied a 4000 scfm thermal oxidation unit for use in an oil recycling operation. The client for this unit operates a transportable waste-oil recovery facility that manufactures various grades of fuel oil from waste lubricating oils. The manufacturing process consists of several unit operations including a thermal-cracking reactor that continuously vent process gases containing VOCs. Venting results from entrained air, vaporized waste, light hydrocarbon non-condensable gases and controlled process venting. The incorporation of a Thermatrix unit in the processing system mitigates VOC emissions. Additionally, a finned-tube heat exchanger unit is used to recover heat from the hot Thermatrix off-gas to provide process heating requirements. The heat is transferred to a circulating hot oil stream. The cooler off-gas exiting the heat recovery unit is vented to atmosphere through a stack.

Preliminary test results show the composition of the Thermatrix/heat recovery unit off-gas meets the performance criteria established for the project. Performance data are presented in Table 2.

Table 2
Performance Summary
Thermatrix Oxidizer Treating Waste-Oil Recycling VOCs

Sample	Total HC (ppmv)	%DRE	CO (ppmv)	%CO_2	%O_2	%N_2	%CH_4
Inlet #1	6400		34	1.1	19	78	37
Outlet #1	ND (<0.5)	>99.99	ND (<10)	2.9	18	79	ND (0.0002)
Outlet #2	ND (<0.5)	>99.99	ND (<10)	5.1	13	81	ND (0.0002)

Treatment of Pulp Plant Non-Condensable Gases

In the Kraft paper production process a solution containing sodium hydroxide and sodium sulfide is used in the treatment of wood to separate the wood's fiber and lignin components. During pulp plant operations volatile sulfur-bearing VOCs are formed which can be problematic from an emissions control standpoint. A particularly problematic source of sulfur-bearing VOCs associated with paper production is the process non-condensable gases (NCGs) which contain significant quantities of pinene, hydrogen sulfide, methyl mercaptan, dimethyl sulfide and dimethyl disulfide.

In 1994, Thermatrix contracted to deliver a system for the treatment of NCG fumes at a pulp mill. The system is comprised of a gas inlet train, a stainless steel 3000 scfm thermal oxidizer, a quench, a wet scrubber and stack. Figures 5 and 6 schematically present details of the oxidizer and overall system. The system has been installed at the client's site and is currently in the startup and commissioning phase of the project. Initial difficulties were encountered in the startup due to the design placement of the temperature sensing and control thermocouples. These difficulties were largely overcome by relocating the original horizontal thermocouples to a vertical orientation in closer proximity to the reaction zone thereby enabling more accurate temperature monitoring and control.

By the end of February 1995, approximately 400 hours of operation on NCG fumes had been logged. In limited tests the following performance criteria have been demonstrated for the system:

- Destruction and removal efficiency (DRE) for total reduced sulfur (TRS) Compounds > 99.99%
- Sulfur dioxide emission rate of <15 ppm
- Sulfur dioxide (SO_2) removal > 99.96%
- Hydrogen sulfide emission rate < 5 ppm

Treatment of Chemical Plant Chlorinated Volatile Organic Compound Emissions

In January 1995 Thermatrix successfully commissioned a 1500 scfm skid-mounted system consisting of a Hastelloy(R) oxidizer and a quench/scrubber. The system is currently processing methylene chloride emissions generated during the production of pesticides. The system is designed to provide > 99.99% DRE for chlorinated hydrocarbons.

PARTICIPATION IN DOD AND DOE TECHNOLOGY DEMONSTRATION PROGRAMS

The Thermatrix thermal oxidation technology is currently being demonstrated in two government-sponsored innovative technology demonstration programs. The elements of these programs are presented below:

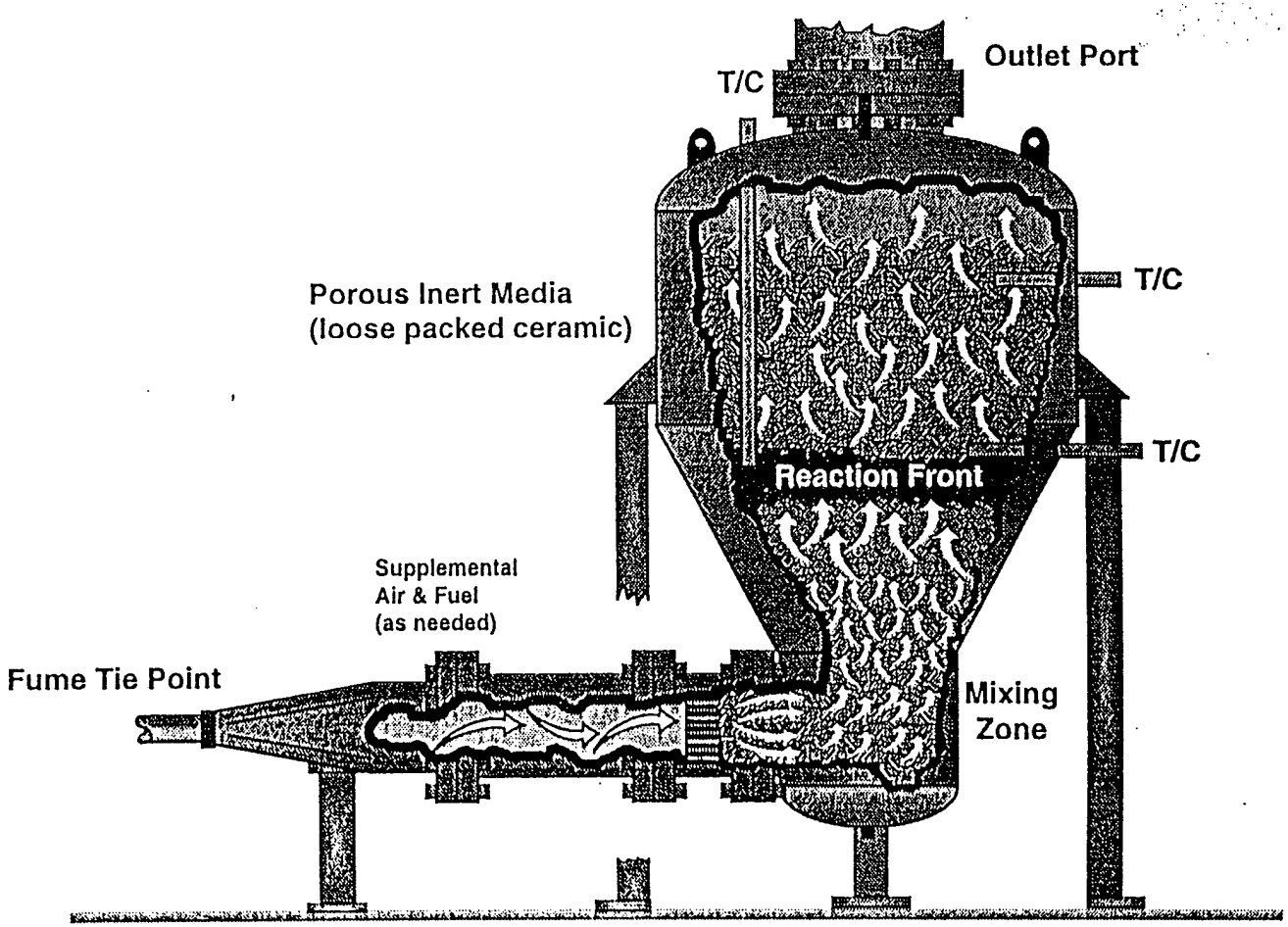

Figure 5
Cutaway Drawing of GS-3000M Reactor
Treatment of Pulp Mill Non-Condensable Gases

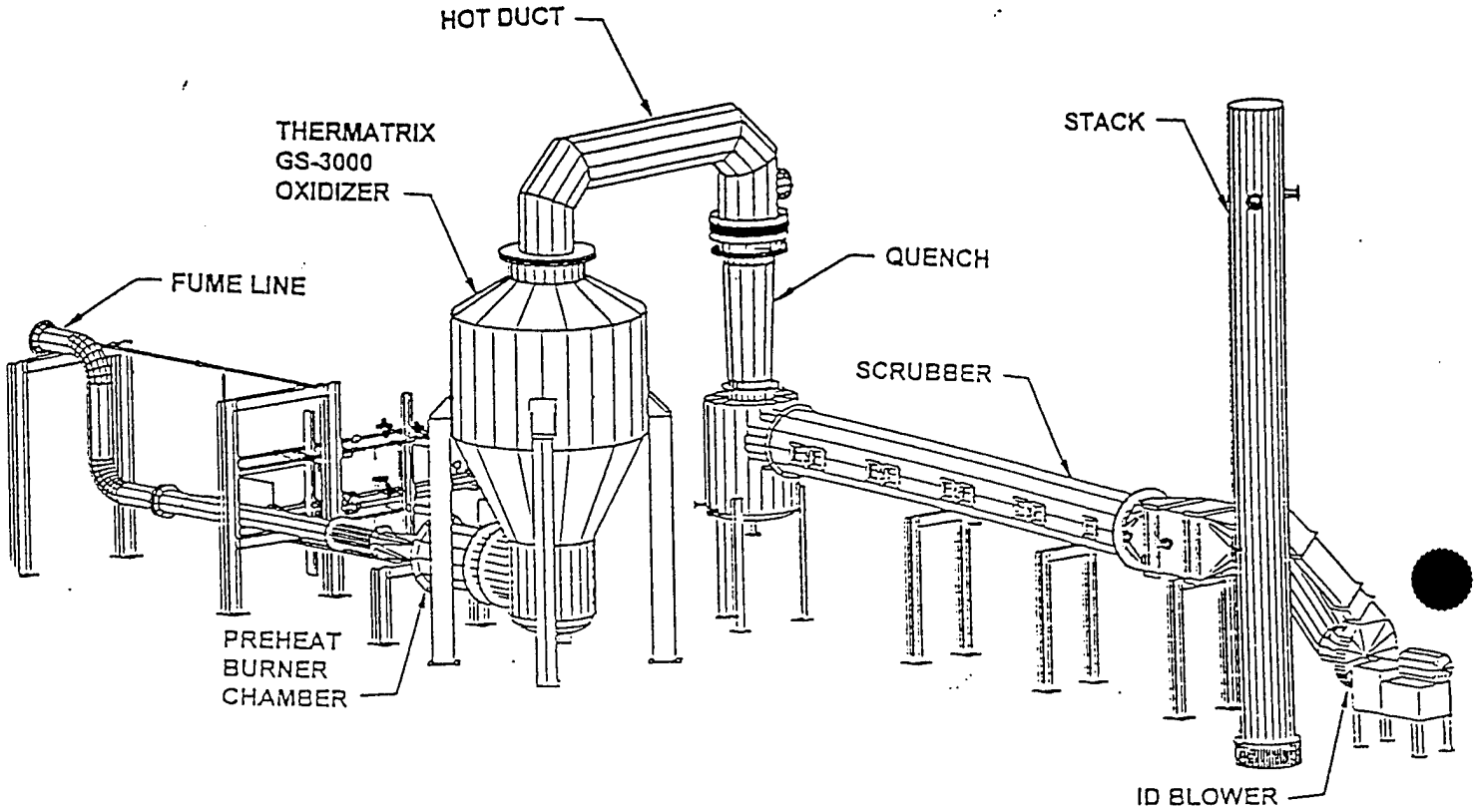

FIGURE 6

PULP PLANT NON-CONDENSABLE
GAS TREATMENT SYSTEM

U.S. Navy

Thermatrix has contracted with the Navy under its Navy Environmental Leadership to demonstrate the effectiveness of the thermal oxidation technology in treating VOC emissions from the fuel farm at the Naval Air Station North Island (NASNI). A 5 scfm electrically heated oxidizer has fabricated for use in this demonstration. The demonstration will be performed in April 1995.

Department of Energy

The Thermatrix technology is applicable to the in-situ and ex-situ treatment of soils contaminated with organic compounds thorough coupling with other technologies, e.g., soil vapor extraction and thermal desorption.[3] Thermatrix will demonstrate its thermal oxidation in the treatment of chlorinated VOCs removed from the vadose zone of the soil at the U. S. Department of Energy Savannah River Laboratory Site. A 5 scfm electrically heated unit will be used in this demonstration which couples soil vapor extraction technology with Thermatrix thermal oxidation technology. A schematic overview of planned demonstration is shown in Figure 7.

CONCLUSIONS

The successful application case histories presented above attest to the broad base of Thermatrix's thermal oxidation technology in providing solutions to organic compound treatment and site remediation. With over 30 projects completed to date, the Thermatrix thermal oxidation technology has rapidly transitioned from an innovative, emerging technology to full-scale application.

REFERENCES

1. R. J. MARTIN, et.al., "Selecting the Most Appropriate HAP Emission Control Technology, " The Air Pollution Consultant, Volume 3, Issue 2 (March/April 1993).

2. M. W. ALLEN, et.al., "Flameless Thermal Oxidation for Low Concentration VOC Remedial Wastestreams: Designs for Planned DOE Demonstrations," presented at the Waste Management '95 Conference, February 26-March 2., 1995, Tucson, Arizona.

3. R. G. WILBOURN, et.al., "Treatment of Hazardous Wastes Using the Thermatrix Treatment System," presented at the 1994 Incineration Conference, May 9-13, 1994, Houston, Texas.

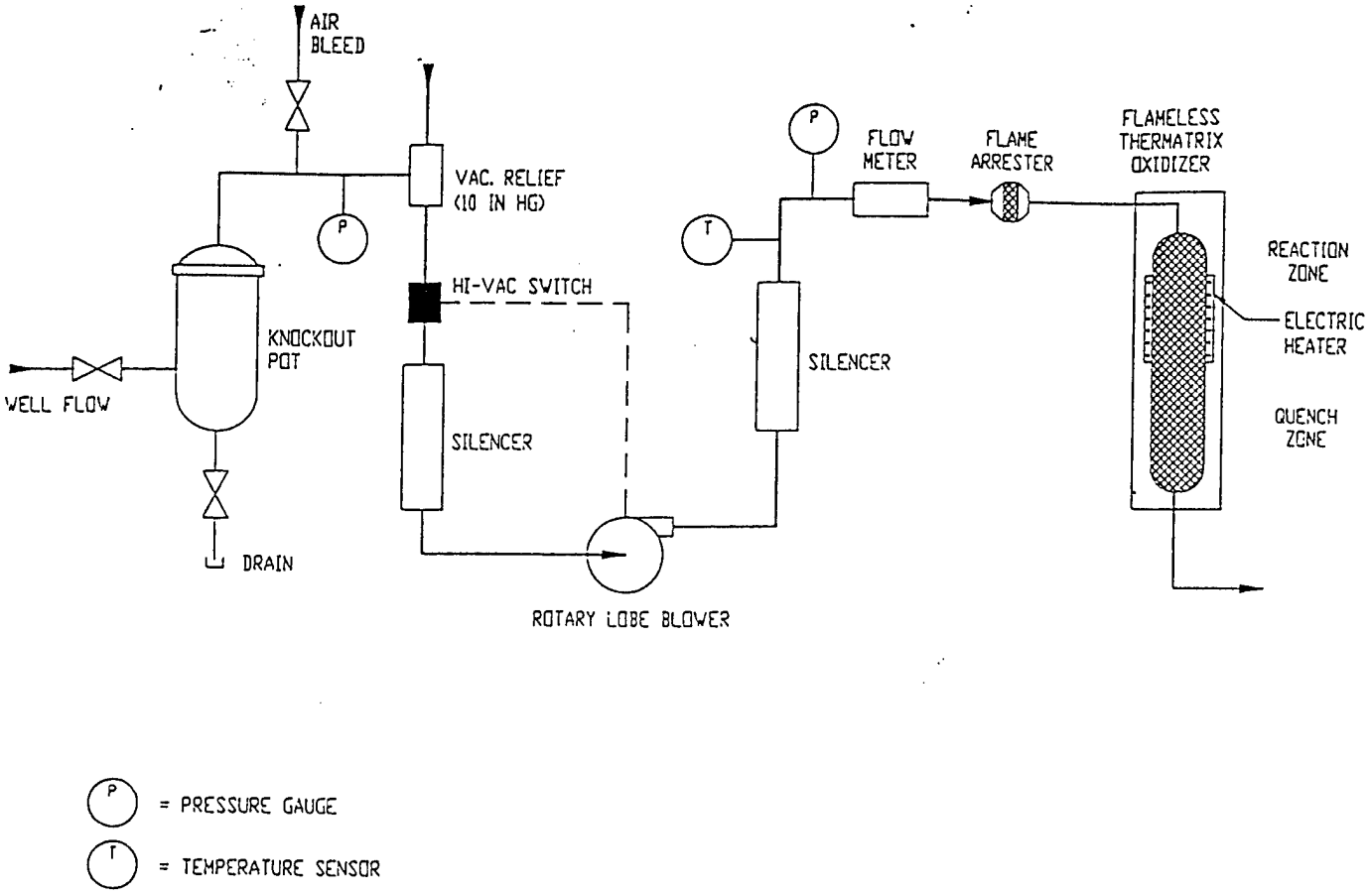

FIGURE 7

SCHEMATIC OVERVIEW OF THE SVE-THERMATRIX DEMONSTRATION

WESTINGHOUSE SAVANNAH RIVER DEMONSTRATION
INITIAL RESULTS

FTO Temp	FTO Flow	PCE inlet ppm	PCE outlet ppm	PCE %DRE	TCE inlet ppm	TCE outlet ppm	TCE %DRE ppm	TCA inlet	TCA outlet	TCA %DRE	Comments
1600°F	5 scfm	737 702	<0.01 <0.01	>99.998 >99.998	292 274	<0.01 <0.01	>99.996 >99.996	17.5 21.4	<0.01 <0.01	>99.94 >99.95	1,1-DCE 5.56 in; <0.01 out
1600°F	7 scfm	568	0.17	99.97	255	<0.01	>99.996	16	<0.01	>99.95	1,1-DCE 4.72 in; <0.01 out
1500°F	5 scfm	345	4.43	98.7	184	<0.01	>99.994	16	<0.01	>99.95	
1700°F	5 scfm	343	0.01	99.997	180	<0.01	>99.994	15	<0.01	>99.93	1,1-DCE 4.09 in; <0.01 out; F113 0.03 in; <0.01 out
1400°F	5 scfm	333	0.51	99.84	179	<0.01	>99.994	12	<0.01	99.916	mono-, di-, tri-, tetra-chloro-methane PICS
1500°F	3.5 scfm	~350 ~350	<0.01 0.05	>99.997 99.985	~180 ~180	<0.01 <0.01	>99.994 >99.994	~15 ~15	<0.01 <0.01	>99.93 >99.93	
1600°F	**5 scfm**	**250**	**<0.001**	**>99.9996**	**120**	**<0.001**	**>99.9991**	-------	------	-------	**4/25/95 Improved detection limit achieved**

Notes:

1)Prior to the initial valving of fume through the oxidizer a "system blank" sample was taken while the pre-heated unit (1600°F) was operating on air flow only (5 scfm). No organics were detected at a detection limit of 10 ppb.

2)">" values reflect quantitation limited by the analytical detection limit of 10 ppb for all compounds.

3) Results reported here are from sampling April 10-14, 1995 except for 4/25/95 entry.

APPENDIX B

TNRCC STANDARD EXEMPTION REGISTRATION AND CONCURRENCE WITH EXEMPTION FROM PERMITTING PROCEDURES

FACSIMILE

To: Peter Guest
Fax #: (602) 852-9112
Re: Standard Exemption
Registration No. 31620
Flameless Thermal Oxidizer
Fort Worth, Tarrant County
Account ID No. TA-0156-K
Date: February 13, 1997
Pages: One, including this cover sheet.

I spoke today with Steve Archabal concerning the status of this exemption registration for the use of a flameless thermal oxidizer at Air Force Plant No. 4 in Fort Worth, Tarrant County. He told me the dates of operation shown on the PI-7 completed in 12/96 have changed. That is, the project has not yet actually started. Please be informed that there is no need to file any additional documentation in order to correct or amend any start dates. The only instance in which you might need to reclaim the exemption - with all of the concomitant paperwork - would be if you changed the type of equipment and/or there occurred a change in the character and/or quantity of contaminants to be treated.

If you have any further question regarding this exemption, feel free to give me a call.

From the desk of...

Terry Murphy
Environmental Quality
Specialist
TNRCC
P.O. Box 13087 MC-162
Austin, TEXAS 78711-3087

(512) 239-1587
Fax: (512) 239-1300

LOCKHEED MARTIN
Tactical Aircraft Systems

9 January 1996
ERM-96-017

Ms. Victoria Hsu, P.E.
Director, Permitting
Texas Natural Resource Conservation Commission
P.O. Box 13087
Austin, Texas 78711-3087

Subject: Flameless Thermal Oxidizer (FTO) Demonstration
TNRCC Account No. TA-0156-K

Dear Ms. Hsu:

The United States Army Corps of Engineers has contracted with Parsons Engineering Science Inc. to demonstrate FTO technology on-site at Air Force Plant No. 4 in Fort Worth, Texas. The unit will be operational for only 90 days and will be used to augment the existing soil vapor extraction system previously authorized as Standard Exemption Registration No. 23558. We believe that this temporary system meets the conditions of Standard Exemption No. 68 for equipment used to treat contaminated groundwater or soil.

As the facility contractor for Air Force Plant No. 4, and on behalf of Parsons Engineering, we submit the Standard Exemption Registration Form PI-7, along with all necessary documentation. This registration has been discussed in detail with Mr. Terry Murphy of your staff. If you have any questions or need additional information, please contact Mr. Scott Fetter at (817) 777-3791.

Sincerely,

W.H. Persky, Director
Employment, Environment and
Safety and Health

WHP:SF:caw

cc: Mr. Jesse Macias, TNRCC Region 4, Fort Worth
Mr. T.C. Michael, City of Fort Worth, Fort Worth

TEXAS NATURAL RESOURCE CONSERVATION COMMISSION

REGISTRATION FORM FOR STANDARD EXEMPTIONS

FORM PI-7

Please mail to: TNRCC, Office of Air Quality, New Source Review Division (MC-162), PO Box 13087, Austin, TX 78711-3087

I. Company Name Parsons Engineering Science, Inc.
(Corporation, Company, Government Agency, Firm, etc.)

Mailing Address 1700 Broadway, Suite 900, Denver, CO 80290

Individual Authorized to Act for Applicant: Name Pete Guest Title Project Manager

Address 1700 Broadway, Suite 900 Telephone (303) 831-8100 Fax (303) 831-8208
Denver, CO 80290

II. LOCATION OF EXEMPT FACILITY (Latitude and Longitude must be to the nearest second):

Name of Plant or Site U.S. Air Force Plant #4

Street Address 1500 Lockheed Boulevard

Nearest City Fort Worth County Tarrant Latitude 32° 46' 05" Longitude 97° 27' 04"

SITE REQUIREMENTS:
A. Submit a plot plan to scale of the property showing the location of plant boundaries, plant equipment, and surrounding area.
B. Furnish an area map with a scale showing the facility location relative to highways and towns.

III. TYPE OF FACILITY:

A. Applicable Standard Exemption Number(s) from TNRCC List 68
B. Name of Facility and Company's Facility Number Flameless Thermal Oxidizer (FTO) Demonstration
C. TNRCC Account Identification Number TA-0156K
D. Previous Special Exemption or Permit Number 23558
E. Operating Schedule: Hours/day 24 Days/week 7 Weeks/year 12
F. Proposed Start of Construction 2-15-96 (Date) Operation 3-1-96 (Date)
G. Permanent [ ] Portable [X]
H. Length of time at this site, if portable 90 Days

IV. PROCESS INFORMATION

Description of Process: Prepare and attach a written description of the exempt process and applicable checklists (when available). The description must be in sufficient detail to indicate that the facility will conform to the specified exemption.

V. EMISSIONS DATA

Furnish a description of the basis for emission rates including fugitives. (Calculations, emission factors, measurement, NSPS, etc.)

Emission Point Number	Name of Source	Name of Air Contaminant	Emission Rate of Each Air Contaminant			
			lb/hr		(90 days) tons/yr	
			Gaseous	Particulate	Gaseous	Particulate
FTO	FTO	Trichloro-ethylene (TCE)	0.04		0.0432	
FTO	FTO	Hydrogen Chloride (HCl)	0.016		0.0172	

VI. The required copy of the application has been sent to the Regional Office of the TNRCC: [X]Yes [ ]No
The required copy of the application has been sent to the Local Programs (if applicable): [X]Yes [ ]No

VII. I, Pete Guest (Name) Project Manager (Title)
state that I have knowledge of the facts herein set forth and that the same are true and correct to the best of my knowledge and belief. I further state that to the best of my knowledge and belief, the project will satisfy the conditions and limitations of the indicated exemption. The facility will operate in compliance with all Regulations of the Texas Natural Resource Conservation Commission and with Federal Environmental Protection Agency Regulations governing air pollution.

DATE 12/21/95 SIGNATURE Peter R. Guest

Rev. 9-15-95

30 TAC CHAPTER 116, RULE §116.211
PERMIT EXEMPTIONS - APPLICABILITY CHECKLIST

This checklist is designed to help you confirm that you meet the general rule for using standard exemptions. Whether or not you use this checklist, your claim must be shown to meet all appropriate general requirements, as well as those in each standard exemption you are claiming.

1. Description of overall activities at this location: **Aircraft Manufacturing Plant**

2. Are there any numbered air permits under the same account number? **YES** NO
   If yes, do any permit conditions prohibit or restrict the use of standard exemptions (§116.211[a][6])? YES **NO**
   (1) If yes, which permit numbers:_____
   (2) If yes, standard exemptions may not be used or their use must meet the restrictions of the permit. A new permit or permit amendment may be required.

3. Emissions check for this STDX claim (§116.211(a)(1)) (see Note 1)

Calculated Tons Per Year

CO: **0.00** NOx: **0.00** SOx: **0.00** PM: **0.00** VOC: **0.0432** Other: **0.0172(HCl)**

Note 1: List all emissions for this project (include point and equipment fugitive emissions from new or modified facilities as well as increases upstream and downstream that result from this project.)

Are SOx, PM, VOC and other emissions shown above each less than 25 TPY? **YES** NO

Are the NOx and CO emissions shown above each less than 250 TPY? **YES** NO

If the answer to either question is "NO," a standard exemption cannot be claimed.

4. Site exemption emissions check (§116.211[a][3]): Are total SOx, PM, VOC and other emissions claimed under standard exemption at the site each less than 25 TPY? **YES** NO

   Are total NOx and CO emissions claimed under standard exemption at the site each less than 250 TPY? **YES** NO

   If either question is answered "NO," determine if one facility at the property has had public notification and comment as required in Subchapter B or D of 30 TAC 116 or the applicable procedures of Chapter 116 in effect at the time of registration. If public notice has occurred, what permit or standard exemption required this action? _____
   If public notice has not occurred, a permit may be required for the proposed facility.

5. Nonattainment Check (§116.211[a][2]): Is the facility located in a nonattainment county/area (see listing below)? **YES** NO
   If "NO," skip to paragraph 6.
   If "YES," which county/~~area~~? Tarrant

Show the actual increases (defined as new allowables minus old actuals - see Nonattainment New Source Review Manual) in emissions, without regard for any decreases, which result from this standard exemption claim for the following pollutants:

NOx: **0.00** VOC: **0.0432** CO: **0.00** PM10: **0.00**

Is the site an existing major source? (See §116.012) **YES** **NO**

Is the modification major? (See §116.012, Table I) **YES** **NO**

You may be required to provide documentation of nonattainment new source review applicability. If you have determined these requirements apply at your site for this exemption claim, enclose the necessary netting documentation (See Nonattainment New Source Review Manual).

6. Prevention of Significant Deterioration (PSD) Check (§116.211[b]):

An overall emissions rate of 100 (for a named source) or 250 tons per year or more on-site, or a significant modification for any single air contaminant for which a NAAQS has been issued may indicate a need for PSD review under 40 CFR 52. If you have determined that the netting requirements of 40 CFR 52 are triggered by this exemption claim, enclose the necessary documentation.

7. If any EPA New Source Performance Standards (NSPS) or National Emissions Standards for Hazardous Air Pollutants (NESHAPS) are applicable for the facility covered by the exemption(s) claimed (§116.211[a][5]), list them here: **None**

8. §116.211(c) states "No person shall circumvent by artificial limitations the requirements of §116.110 of this title (covering permitting)." Circumvention by artificial limitations may include:

   (a) dividing a complete project into separate segments to circumvent §116.211(a)(1) limits;

   (b) claiming feed or production rates below the physical capacity of the project's equipment in order to begin constructing facilities before a permit or permit amendment is approved for full scale operations.

Ensure that any exemption claim is free of circumvention by means of artificial limits such as these.

9. If all §116.211 requirements are met, we suggest use of the appropriate standard exemption worksheet(s) or checklist.

NONATTAINMENT AREAS FOR OZONE (VOC OR Nox): Brazoria, Chambers, Collin, Dallas, Denton, El Paso, Fort Bend, Galveston, Hardin, Harris, Jefferson, Liberty, Montgomery, Orange, Tarrant, and Waller Counties for VOC and NOx as precursors to ozone; and, Victoria County for VOC only.

FOR LEAD: Section of Collin County

FOR PARTICULATE MATTER (PM 10): El Paso County

FOR CARBON MONOXIDE: Section of El Paso County

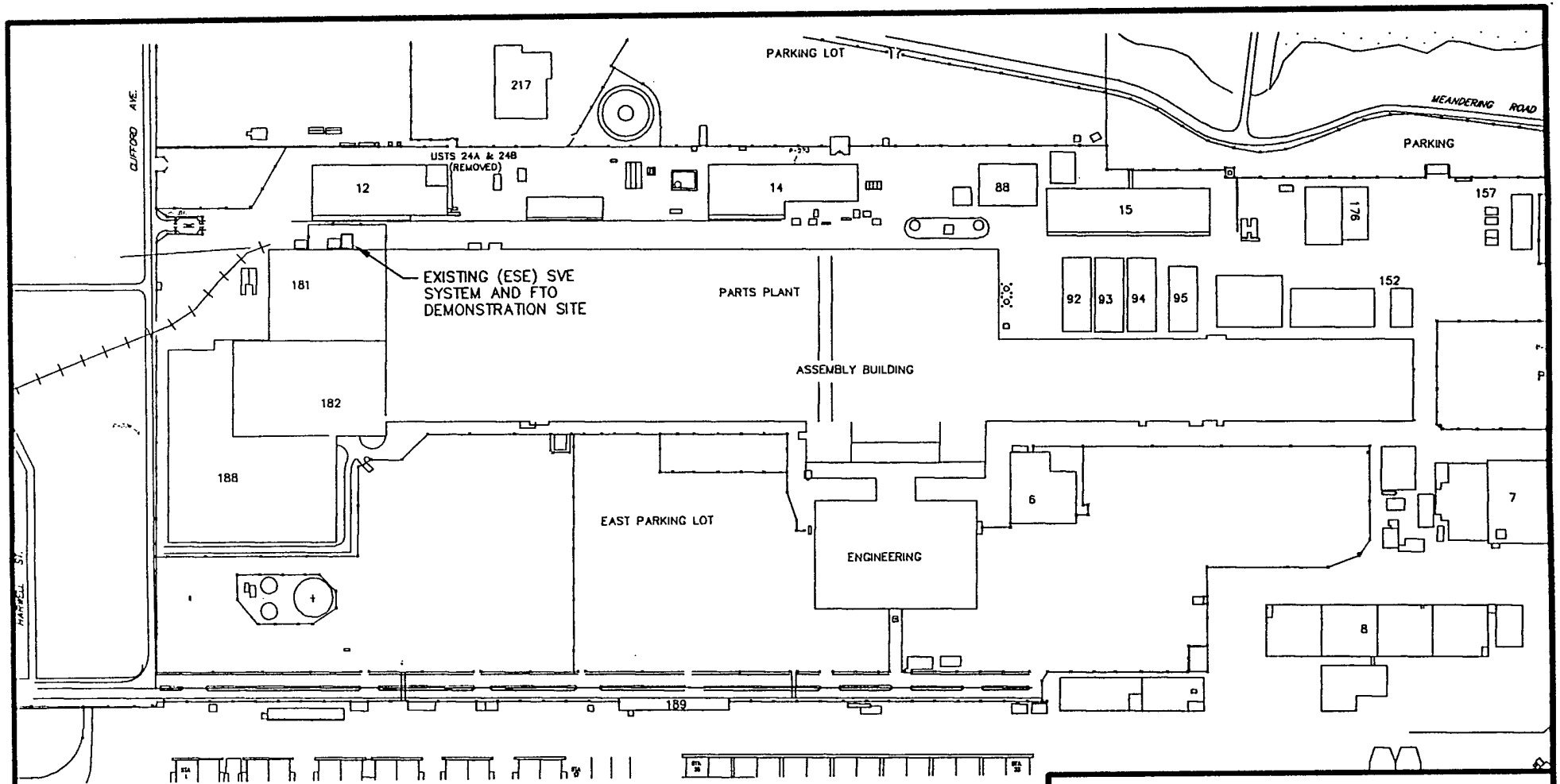

N

0 300 600 1200
FEET

FIGURE II.A

PLOT PLAN

FTO Demonstration
Air Force Plant 4
Fort Worth, Texas

PARSONS ENGINEERING SCIENCE, INC.
Denver, Colorado

K:\AFCEE\728414\95DN1597, 12/20/95 at 14:08

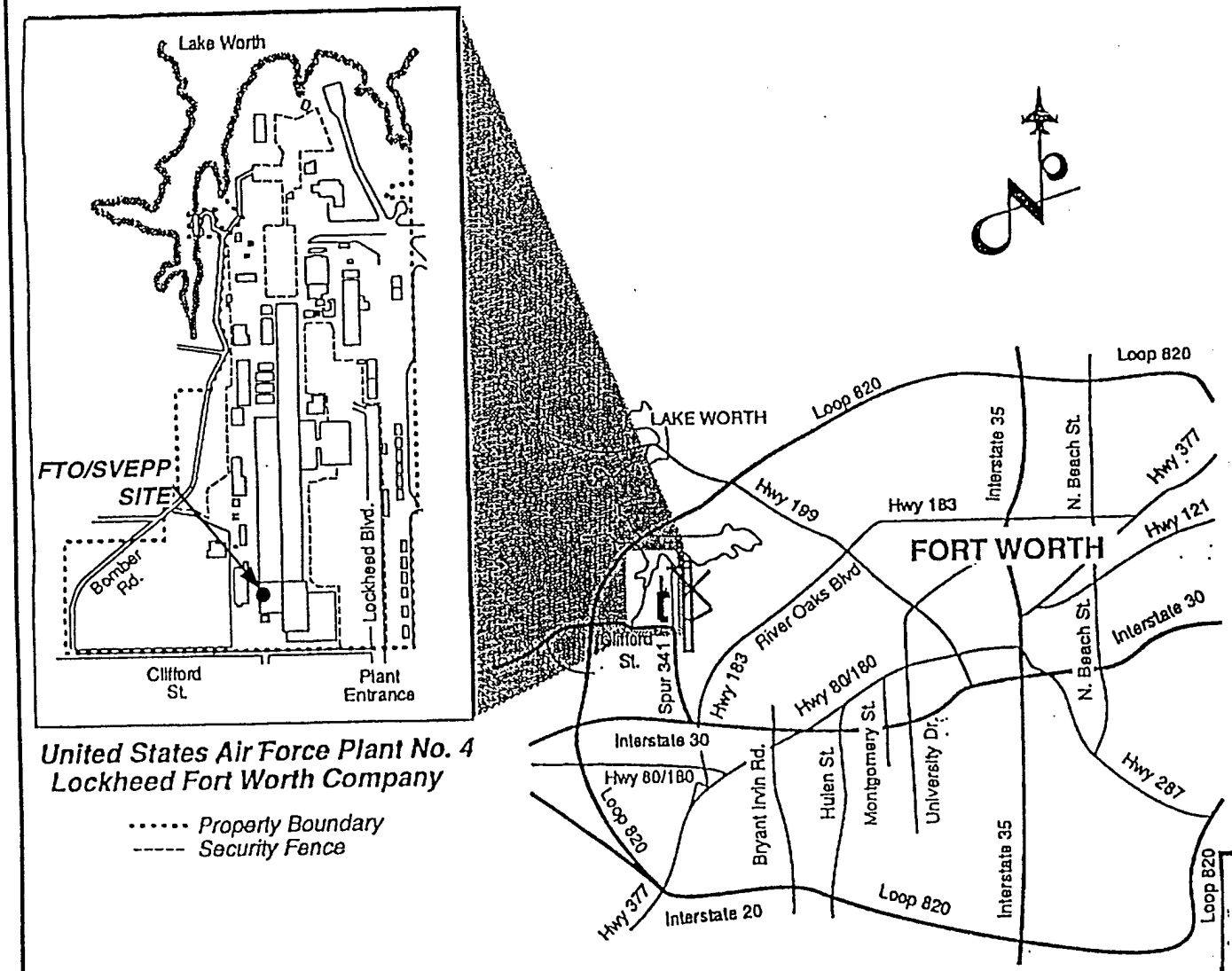

Sources: LOCKHEED.

FIGURE II.B

AREA MAP

FTO Demonstration
Air Force Plant 4
Fort Worth, Texas

PARSONS ENGINEERING SCIENCE, INC.
Denver, Colorado

FORM PI-7
(CONTINUED)

SECTION IV PROCESS INFORMATION

The Air Force Center for Environmental Excellence (AFCEE) has contracted Parsons Engineering Science, Inc. (Parsons ES) to provide services that will support environmental air conformity through evaluation of the flameless thermal oxidation (FTO) vapor-phase treatment technology for off-gas abatement at various Air Force base sites worldwide. As prime contractor, Parsons ES has subcontracted Theramtrix, Inc. to provide the FTO treatment system. Currently, four Air Force installations have been identified as test sites for the FTO demonstrations, including Air Force Plant 4 (AFP 4), in Fort Worth, Texas.

The site selected for performance of the FTO demonstration at AFP 4 is Building 181. The soils beneath Building 181 are contaminated with trichloroethene (TCE) as a result of a surface release. Currently the U.S. Army Corps of Engineers (USACE) is operating a soil vapor extraction pilot plant (SVEPP) and groundwater treatment project (GTP) at this site. USACE has contracted International Technology Corporation (ITC) to operate these systems at Building 181 under an existing facility authorization of Standard Exemption No. 68, Registration No. 23558.

The FTO demonstration at Building 181 will include the installation of the Thermatix FTO system, connection to existing vapor treatment system piping, startup testing, and a 90-day period of operation and performance monitoring. Additionally, several influent and effluent soil vapor samples will be collected during the startup and optimization period to evaluate the system performance during non steady-state conditions. Most of these samples will be analyzed in the field for the total organic vapor (TOV) content using a hand-held direct-reading instrument (photoionization

detector [PID] or similar). Several confirmatory samples will be shipped to a US Environmental Protection Agency (EPA) -certified air analytical laboratory for volatile organic compound (VOC) analysis using EPA Method TO-14.

The process flow diagram of the FTO system is shown in Figures IV.A and IV.B. The FTO system will induce a vacuum to each of the vapor extraction wells (EWs) beneath Building 181 and convey the extracted TCE-laden vapors to the FTO system.

The FTO system is designed to extract and treat contaminated vapor at flow rates between 20 and 120 standard cubic feet per minute (scfm), and produce an effluent that reduces the influent contaminant concentration by not less than 99.99 percent. Vacuum is produced in the subsurface via a series of screened manifolds using an extraction blower. Extracted soil vapors are then injected at a regulated flow rate into a premixing chamber, then into the reaction bed. The FTO system also has a nominal residence time of 1.0 second, at a worst-case maximum inlet flow rate of 120 scfm.

The system also contains an effluent quench and scrubber that will remove at least 99.5 percent of hydrogen chloride (HCl) from the reactor (oxidizer) exhaust during the maximum loading rate into the FTO system at 1,500 parts per million by volume (ppmv) (TCE) and 120 scfm. Two scrubber tanks are placed in series. The process is shown in the process and instrumentation diagram (P&ID) presented in Figures IV.C and IV.D.

The Thermatrix FTO system satisfies the requirements of Standard Exemption No. 68. Below is the response to each condition of this standard exemption.

68(a) The soil and groundwater contamination are believed to be from vapor degreasing tanks (since removed) in Building 181. No water or soil from outside the plant will be treated in these projects.

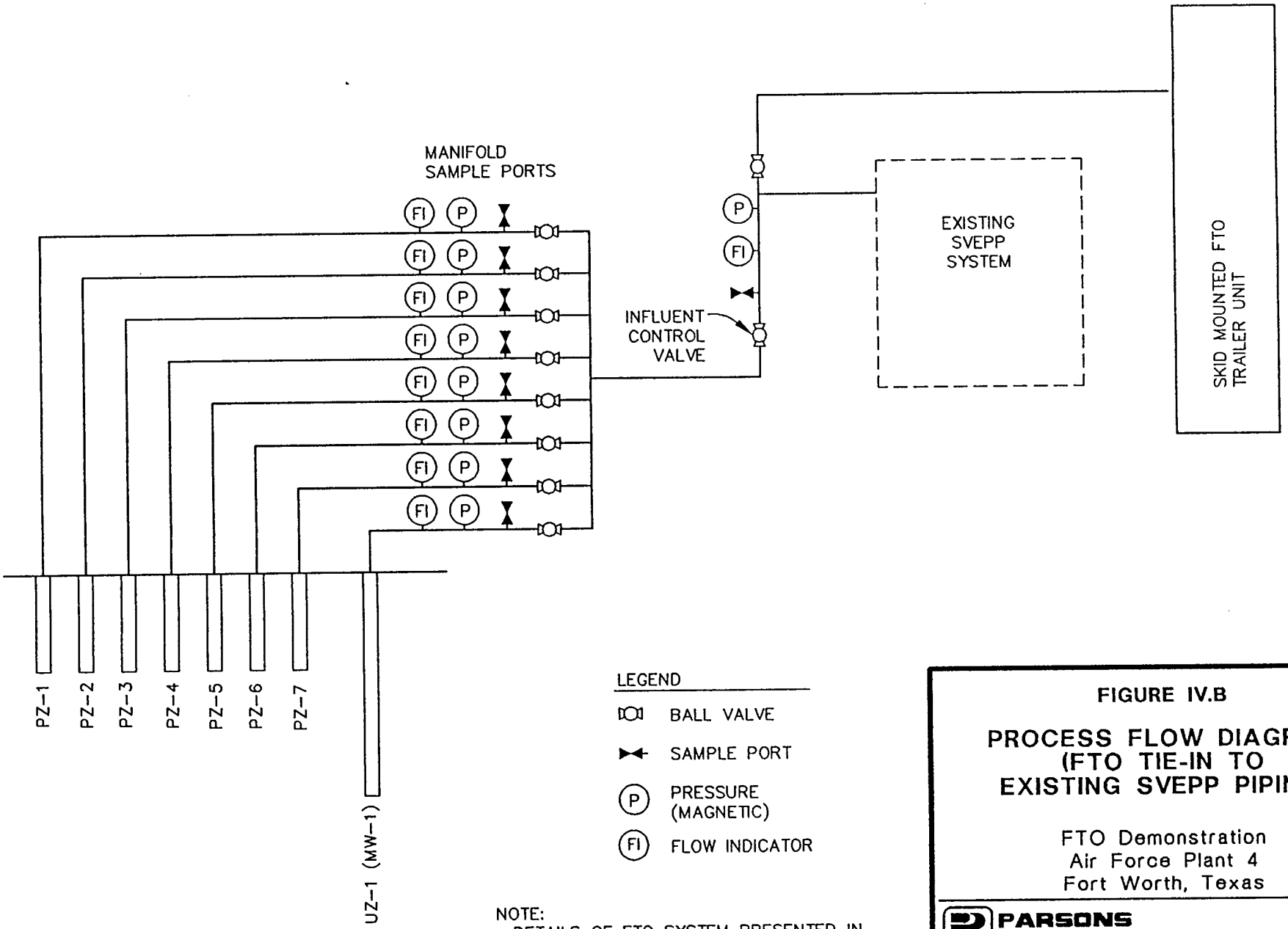

NOTE:
DETAILS OF FTO SYSTEM PRESENTED IN
FIGURES IV.C AND IV.D

SOURCE: ESE, 1994b

FIGURE IV.B

PROCESS FLOW DIAGRAM (FTO TIE-IN TO EXISTING SVEPP PIPING)

FTO Demonstration
Air Force Plant 4
Fort Worth, Texas

PARSONS ENGINEERING SCIENCE, INC.
Denver, Colorado

K:\AFCEE\728414\95DN1598, 12/20/95 at 14:17

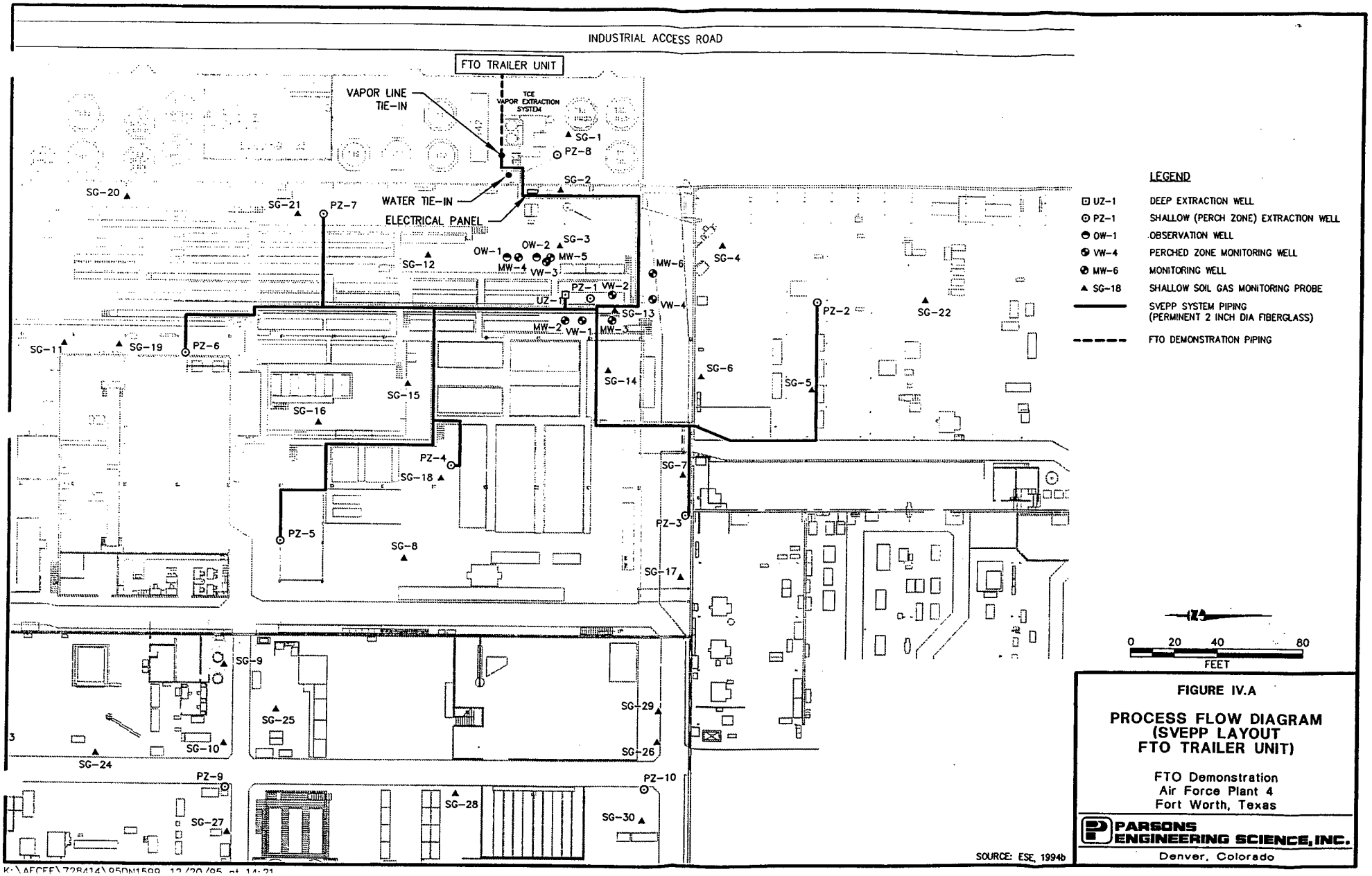

FIGURE IV.A

PROCESS FLOW DIAGRAM (SVEPP LAYOUT FTO TRAILER UNIT)

FTO Demonstration
Air Force Plant 4
Fort Worth, Texas

PARSONS ENGINEERING SCIENCE, INC.
Denver, Colorado

K:\AFCEE\728414\95DN1599 12/20/95 at 14:21

SX-210	T-120	H-150	B-210	SX-240	MX-280	R-330	R-310	DX-500 A/B	DX-510 A/B	PA-810
FILTER/SILENCER	K.O. POT	VAPORIZER/REGULATOR	AIR/FUME BLOWER 3" X 3"	SPARGER	STATIC MIXER	PREHEATER	THERMAL OXIDIZER	BLIND AND GOGGLE	CROSSOVER DUCT	CONTROL PANEL

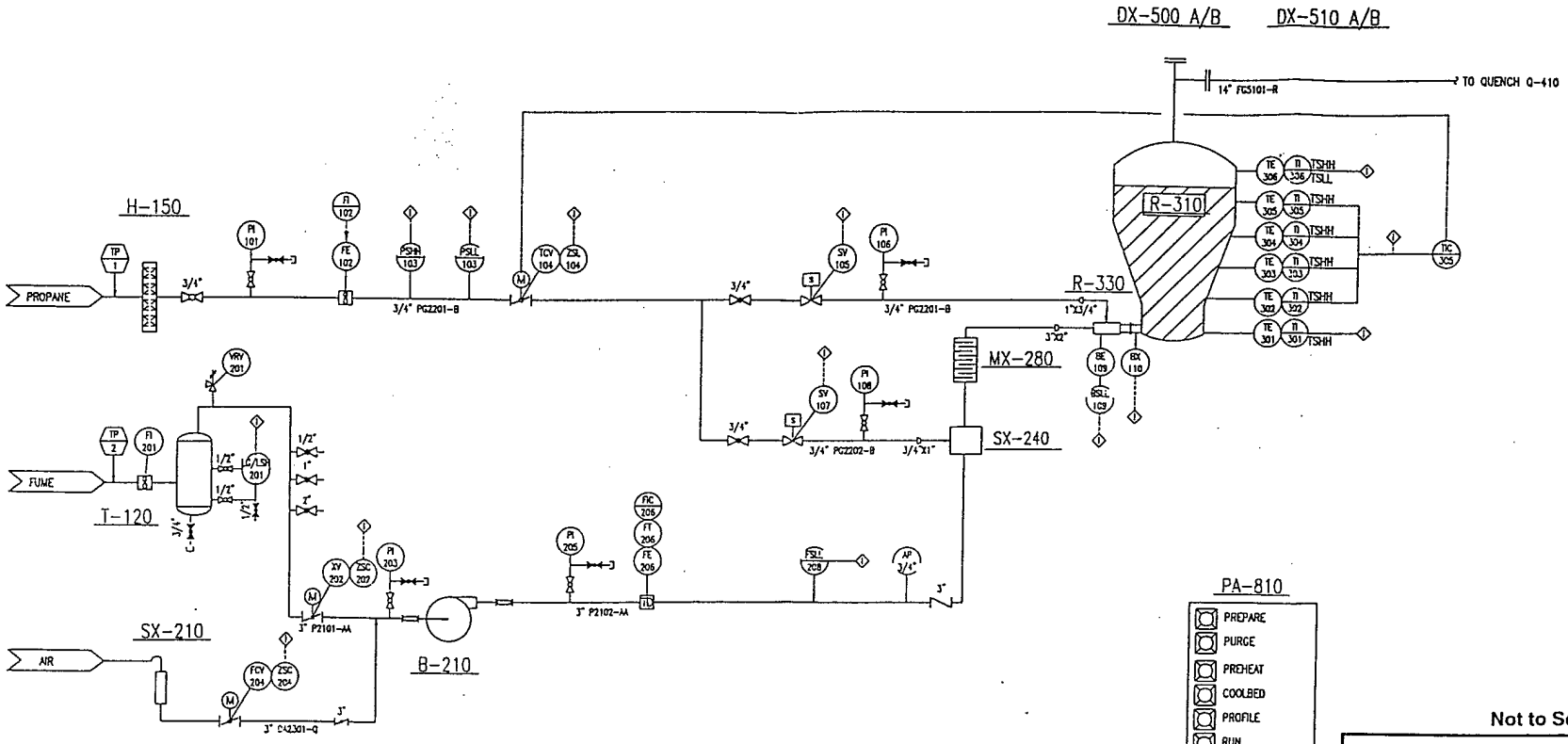

NOTES:

1. AREA CLASSIFICATION IS GENERAL SERVICE
2. INSTRUMENT AIR IS NOT AVAILABLE
3. ALARM INDICATIONS ARE PROVIDED FOR ALL SWITCHES
4. ESD KILLS ALL SKID OPERATIONS

Sources: Thermatrix, Inc. 1995.

Not to Scale

FIGURE IV.C

PIPING AND INSTRUMENTATION DIAGRAM FRONT HALF FTO SYSTEM

FTO Demonstration
Air Force Plant 4
Fort Worth, Texas

PARSONS ENGINEERING SCIENCE, INC.
Denver, Colorado

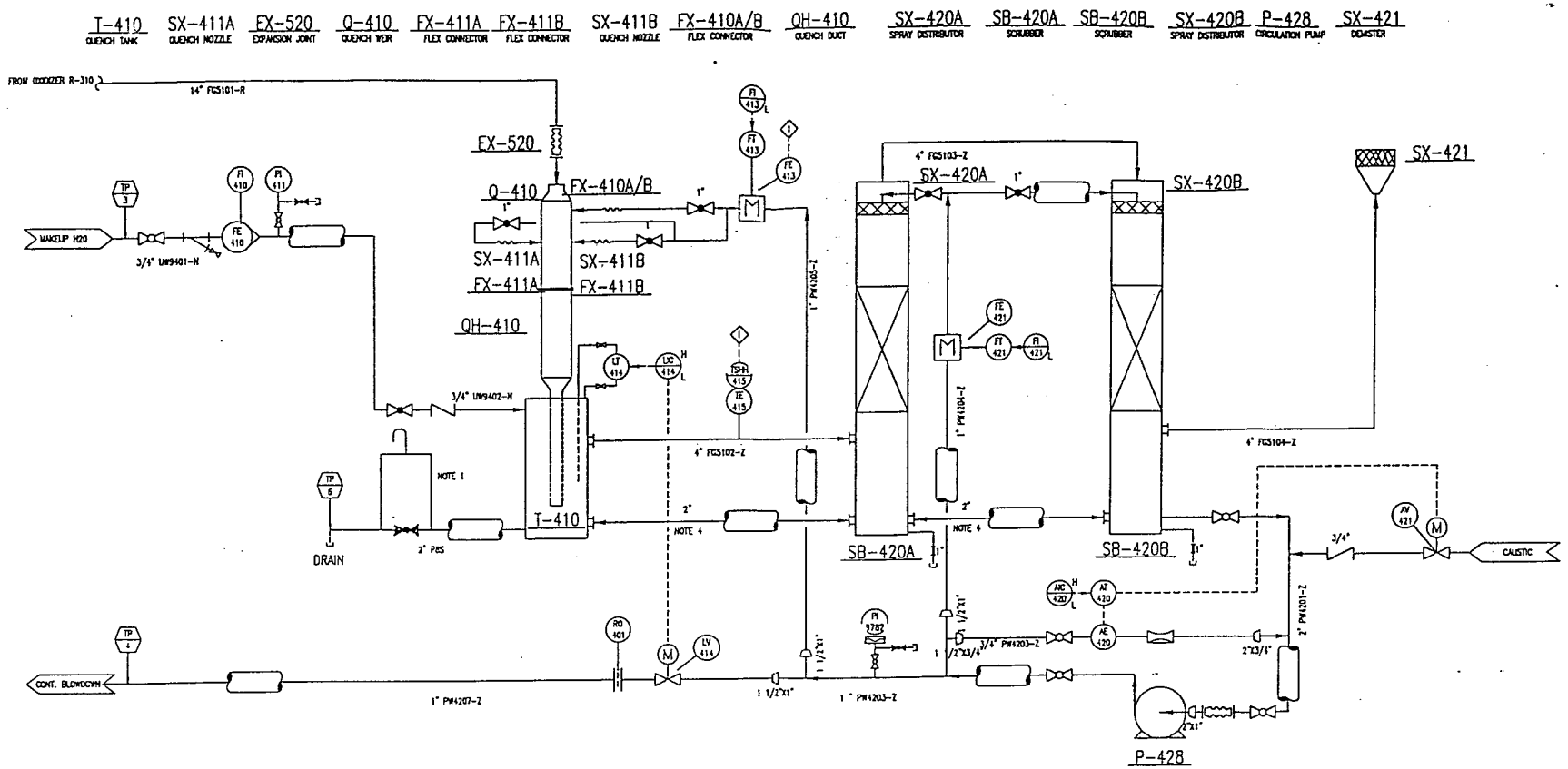

NOTES:

1. SEAL LEG OVERFLOWS AT HIGH LEVEL
2. INSTRUMENT AIR IS NOT AVAILABLE
3. STATUS OF ALL SWITCHES IS INDICATED
4. COMMON SUMP TIE LINE

FIGURE IV.D

PIPING AND INSTRUMENTATION DIAGRAM BACK HALF FTO SYSTEM

FTO Demonstration
Air Force Plant 4
Fort Worth, Texas

PARSONS ENGINEERING SCIENCE, INC.
Denver, Colorado

Sources: Thermatrix, Inc. 1995.

FORM PI-7
(Continued)

68(b) See Section V for an explanation of soil vapor contaminant analyses. The soil gas samples taken beneath Building 181 did not demonstrate any evidence of petroleum hydrocarbon contamination.

68(c) The FTO system emissions meet the requirements of Standard Exemption 118 (b), (c), and (d). (See Section V for explanation)

68(d) This project will not involve the handling or processing of contaminated soil or remediated soil, therefore, this requirements does not apply.

68(e)(3) The FTO system falls into this category of catalytic oxidizers according to telephone conversations with Mr. Terry Murphy (December 1995) of the Texas Natural Resource Conservation Commission (TNRCC) after his review of the system process. The FTO system is designed to achieve greater than 99 percent removal efficiency and typically as high as 99.99 percent. The FTO system is designed with several fail-safe shutdown modes. One fail-safe in particular, is tied into the operating temperatures of the system. The FTO system is designed to operate at 1,800 degrees Fahrenheit (°F), although, if the oxidizer (reactor) temperatures either fall below 1,400 °F or reach 2,200 °F, the system will automatically shut down. This feature ensures that the system will always achieve its designed removal efficiency. Due to this inherent feature of the FTO design, Mr. Terry Murphy (TNRCC) has waived the need to conduct weekly instrument readings using either a flame or photoionization detector or equivalent instrument to collect inlet and outlet samples from the system. However, as part of the FTO evaluation, the system will be sampled at the inlet and outlet using a portable direct-reading instrument similar to those mentioned, as well as the collection of laboratory samples from these same areas that will be

analyzed for VOCs using EPA Method TO-14 (includes both chlorinated and nonchlorinated VOCs). This sampling event will occur every 2 weeks during the 90-day evaluation period. Records of the oxidizer performance will be maintained in accordance with condition (g) of this exemption.

68(f) A copy of the Form PI-7 for the FTO demonstration will be sent to the TNRCC Office of Air Quality in Austin, Texas. Specific information concerning the basis of the expected emissions can be found in Section V

68(g) A copy of this form PI-7 and supporting data will be maintained at the site. These records will be available for inspection and retained for at least 2 years following the date the data was obtained.

FORM PI-7
(CONTINUED)

SECTION V EMISSIONS DATA

During an initial site visit in November 1995, a soil gas sample was collected from the source area within Building 181. This sample was collected in order to prepare the site-specific work plan and to provide the emissions data required for this standard exemption and to support the demonstration of the FTO system. As discussed with Mr. Terry Murphy of the TNRCC, the current emission points and off-plant receptor distances being used under the existing Standard Exemption Registration No. 23558 for this site would be applicable. The explanation of the estimated emission rates are presented herein.

The EWs to be used for the FTO demonstration are located within the vicinity of the former TCE degreasing tank area in Building 181. The soil gas sample collected in November 1995, was from EW UZ-1 located within the source area of the TCE contamination inside Building 181. Although there are an additional seven EWs as part of the existing extraction system, the soil gas sample was collected from the EW that showed the highest TCE contaminant levels based on the previous SVE pilot tests at this site. Laboratory analyses from the soil gas sample collected from UZ-1 in November 1995 detected only TCE at a concentration of 23,000 ppmv. To be conservative, the highest inlet concentrations at the highest inlet design flow rate were chosen to predict a worst-case scenario emission rate. The maximum inlet flow rate through the system is 120 scfm. The maximum designed loading rate is 3.67 pounds per hour (lb/hr) TCE. This inlet loading rate is equal to 1,500 ppmv TCE at 120 scfm. Likewise, an equal loading rate that may be considered could be 3,000 ppmv TCE at

60 scfm. During this demonstration, the total maximum loading rates into the FTO system will not exceed 3.67 lb/hr during any test condition. This will be ensured by monitoring the influent concentration and adjusting the flow rate and/or adding dilution air.

The maximum allowable emission rate, E, was calculated by the equation E=L/K, where L is determined from Table 118A, and K is a function of the distance from the emission point to the nearest off-plant receptor. For this project, the distance is 880 feet, which leads to a K value of 40.4.

A worst-case scenario was used to calculate the projected air emissions before treatment (Ep): 1) maximum air flow rate, 2) maximum concentration of contaminants, and 3) all of the VOCs are released to the atmosphere. The Ep value for TCE was calculated as follows:

Example: TCE = 1,500 ppmv

Convert ppmv to μg/L:

μg/L = [1,500ppmv]÷[24.055(Ideal Gas Law)]x[131.4 mol wt=TCE]

μg/L = 8,194 TCE

$$Ep = \left[8{,}194\ \frac{\mu g}{L}\right] X \left[120\ \frac{ft^3}{min}\right] X \left[28.3\ \frac{L}{ft^3}\right] X \left[60\ \frac{min}{hr}\right] X \left[10^{-9}\ \frac{kg}{\mu g}\right] X \left[2.2\ \frac{lb}{kg}\right]$$

Ep = 3.67 lb TCE/hr

The FTO system is designed to provide greater than 99-percent destruction efficiency. The projected emission rate Ep for TCE was multiplied by 1.0 percent to determine the maximum projected emission rate, Et for TCE, after FTO treatment. The resultant emission rate for TCE is provided in the table below. This table summarizes the contaminant, the maximum expected concentration (C), the L value for TCE from 118(c), corresponding maximum allowable emission rate (E), the projected

emission rate with no FTO treatment (Ep), and the projected emission rate (Et) after FTO treatment. The projected emission rate after FTO treatment is below the maximum allowable emission rate for TCE.

SUMMARY OF FTO EMISSION RATE FOR TCE

Contaminant	C (mg/L)	L (Table 118A)	E (lb/hr)	Ep (lb/hr)	Et (lb/hr)
Trichloroethene (TCE)	8,194	135	3.34	3.67	0.04

Since the FTO process converts TCE to CO_2, H_2O, and HCl, the FTO system is equipped with a scrubber to remove the HCl produced during the oxidation process. Based on the calculated maximum loading rate of TCE at 3.67 lb/hr, the FTO system is designed to remove 99.5 percent of the HCl produced at this influent TCE loading rate. Assuming all chlorine turns to HCl, the following calculations provide the basis for meeting the maximum allowable HCl emission limit listed in Table 118A.

Example:

Convert TCE 3.67 lb/hr to lb mols/hr:

$$= 3.67\,\text{lb / hr} \Rightarrow \frac{3.67\ \text{lb / hr}}{131.4\,\text{mol wt / TCE}} = 0.028\,\text{lb mols / hr}$$

Convert TCE to HCl lb mols/hr:

[0.028 TCE mols/hr]x[3 Cl] = 0.084 lb mols/hr HCl

Convert HCl lb mols/hr to lb/hr:

[0.084 lb mols/hr]x[36.46 mol wt/HCl] = 3.063 lb/hr HCl

The FTO scrubber system is designed to remove 99.5 percent of the HCl at this maximum inlet loading rate of 3.063 lb/hr. The projected emission rate, Ep for HCl,

FORM PI-7
(Continued)

was multiplied by 0.5 percent to determine the maximum projected emission rate, Et for HCl, after the FTO scrubber treatment. The resultant emission rate for HCl is provided in the table below. This table summarizes the contaminant, the maximum expected emission rate without FTO treatment (Ep), the L value for HCl from 118(c), corresponding maximum allowable emission rate (E), and the project emission rate (Et) after FTO scrubber treatment. The projected emission rate after FTO treatment is below the maximum allowable emission rate for HCl.

SUMMARY OF FTO EMISSION RATE FOR HCl

Contaminant	L (Table 118A)	E (lb/hr)	Ep (lb/hr)	Et (lb/hr)
Hydrogen chloride (HCl)	1.0	0.0247	3.063	0.016

Using this worst-case scenario for the FTO system demonstration, all projected contaminant effluent concentrations are below the applicable standard exemption maximum allowable limitations. To confirm these projections, scrubber efficiency will be verified during this demonstration by analyzing effluent vapor samples using the National Institute for Occupational Safety and Health (NIOSH) Analytical Method 7903 for HCl.

Barry R. McBee, *Chairman*
R. B. "Ralph" Marquez, *Commissioner*
John M. Baker, *Commissioner*
Dan Pearson, *Executive Director*

TEXAS NATURAL RESOURCE CONSERVATION COMMISSION

Protecting Texas by Reducing and Preventing Pollution

February 1, 1996

Mr. Peter Guest
Project Manager
PARSONS ENGINEERING
SCIENCE, INC.
1700 Broadway, Suite 900
Denver, Colorado 80290

Re: Standard Exemption
Registration No. 31620
Flameless Thermal Oxidizer
Fort Worth, Tarrant County
Account ID No. TA-0156-K

Dear Mr. Guest:

This is in response to your exemption registration, Form PI-7, concerning the proposed installation of a flameless thermal oxidizer at your soil and groundwater remediation pilot facility at Air Force Plant No. 4 in Fort Worth, Tarrant County. We understand that the unit will be operational for only 90 days augmenting the existing soil vapor extraction system, and that estimated emissions of trichloroethene and HCl are 0.04 and 0.016 lb/hr respectively.

After evaluation of the information which you have furnished, we have determined that your proposed installation is exempt from permitting procedures under Standard Exemption Nos. 68 and 118 if constructed and operated as described in your registration request. These standard exemptions were authorized by the Executive Director of the Texas Natural Resource Conservation Commission (TNRCC) pursuant to Section 116.211 (Regulation VI). Copies of the exemptions in effect at the time of this registration are enclosed. You must operate in accordance with all requirements of the enclosed standard exemptions.

You are reminded that regardless of whether a permit is required, these facilities must be in compliance with all rules and regulations of the TNRCC and of the U.S. Environmental Protection Agency at all times.

Your cooperation in this matter is appreciated. If you have any questions concerning this exemption, please contact Mr. Duncan Stewart of our Office of Air Quality, New Source Review Division at (512) 239-1906.

Sincerely,

Tammy Villarreal
for Manager, Chemical Section
New Source Review Division

TV/DS/ds

Enclosures

cc: Mr. Jesse Macias, Air Program Manager, Arlington
Mr. T. C. Michael, Acting Coordinator of Air Pollution Control Program, Department of Environmental Management, Fort Worth

Record No. 41086

printed on recycled paper using soy based ink

****

68. Equipment used to reclaim or destroy chemicals removed from contaminated ground water, contaminated water condensate in tank and pipeline systems, or contaminated soil, for the purpose of remedial action, provided all the following conditions are satisfied:

(a) Applicability shall pertain to soil and water remediation at the property where the original contamination of the ground water or soil occurred or at a nearby property secondarily affected by the contamination, but not to any soil or water treatment facility where soils or water are brought in from another property. Such facilities are subject to §116.1, relating to Permit Requirements.

(b) For treating groundwater or soil contaminated with petroleum compounds, the total emissions of petroleum hydrocarbons shall not exceed 1.0 pound per hour (lb/hr), except that benzene emissions also must meet the conditions of Standard Exemption 118(c) and (d). For purposes of this exemption, petroleum is considered to include: (1) liquids or gases produced from natural formations of crude oil, tar sands, shale, coal and natural gas, or (2) refinery fuel products to include fuel additives.

(c) For treating groundwater or soil contaminated with chemicals other than petroleum, emissions must meet the requirements of Standard Exemption 118(b), (c), and (d). If the groundwater or soil is contaminated with both petroleum and other chemicals, the petroleum compound emissions must meet condition (b) of this exemption and the other chemical emissions must meet the requirements of Standard Exemption 118(b), (c), and (d). The emission of any chemical not having a Limit (L) Value in Table 118A of Standard Exemption 118 is limited to 1.0 lb/hr.

(d) The handling and processing (screening, crushing, etc.) of contaminated soil and the handling and conditioning (adding moisture) of remediated soil shall be controlled such that there are no visible emissions with the exception of moisture.

(e) If abatement equipment is used to meet conditions (b) and (c), the equipment must satisfy one of the following conditions:

(1) The vapors shall be burned in a direct-flame combustion device (incinerator, furnace, boiler, heater, or other enclosed direct-flame device) operated in compliance with Standard Exemption 88(b) and (c).

(2) The vapors shall be burned in a flare which meets the requirements of Standard Exemption 80 and the requirements of 40 Code of Federal Regulations 60.18 which shall take precedence over Standard Exemption 80 in any conflicting requirements whether or not New Source Performance Standards apply to the flare.

(3) The vapors shall be burned in a catalytic oxidizer which destroys at least 90% of the vapors. An evaluation of oxidizer effectiveness shall be made at least weekly using a portable flame or photoionization detector or equivalent instrument to determine the quantity of carbon compounds in the inlet and outlet of the catalytic oxidizer. Records of oxidizer performance shall be maintained in accordance with condition (g).

(4) The vapors shall be routed through a carbon adsorption system (CAS) consisting of at least two activated carbon canisters that are connected in series. The system shall meet the following additional requirements:

(A) The CAS shall be sampled and recorded weekly to determine breakthrough of volatile organic compounds (VOC). Breakthrough is defined as a measured VOC concentration of 50 parts per million by volume (ppmv) in the outlet of the initial canister. The sampling point shall be at the outlet of the initial canister, but before the inlet to the second or final polishing canister. Sampling shall be performed while venting maximum emissions to the CAS. (Example: during loading of tank trucks, during tank filling, during process venting.)

(B) A flame ionization detector (FID) shall be used for VOC sampling. The FID shall be calibrated prior to sampling with certified gas mixtures (propane in air) of 10 ppmv $\pm$ 2.0% and of 100 ppmv $\pm$ 2.0%.

(C) When the VOC breakthrough is measured, the waste gas flow shall be switched to the second canister immediately. Within four hours of detection of breakthrough, a fresh canister shall be placed as the new final polishing canister. Sufficient fresh activated carbon canisters shall be maintained at the site to ensure fresh polishing canisters are installed within four hours of detection of breakthrough.

(D) Records of the CAS monitoring maintained at the plant site shall include, but are not limited to, the following:

1. sample time and date,
2. monitoring results (ppmv),
3. corrective action taken, including the time and date of the action, and
4. process operations occurring at the time of sampling.

(E) The registration shall include a demonstration that activated carbon is an appropriate choice for control of the organic compounds to be stripped.

(f) Before construction of the facility begins, the facility shall be registered with the Texas Natural Resource Conservation Commission (TNRCC) Office of Air Quality in Austin using Form PI-7. The registration shall contain specific information concerning the basis (measured or calculated) for the expected emissions from the facility. The registration shall also explain details as to why the emission control system can be expected to perform as represented.

(g) Records required by applicable paragraphs of this exemption shall be maintained at the site and made available to personnel from the TNRCC or any local agency having jurisdiction. These records shall be made available to representatives of the TNRCC and local programs upon request and shall be retained for at least two years following the date that the data is obtained.

TEXAS NATURAL RESOURCE CONSERVATION COMMISSION

STANDARD EXEMPTION LIST

30 TAC §116.211
Control of Air Pollution By Permits For New Construction or Modification

Adopted September 6, 1995
Effective October 4, 1995

****

118. Facilities, or physical or operational changes to a facility, provided that all of the following conditions are satisfied:

(a) This exemption shall not be used to authorize construction or any change to a facility specifically authorized in another standard exemption, but not meeting the requirements of that exemption. However, once the requirements of a specific exemption are met, Exemption 118(c) and (d) may be used to qualify the use of other chemicals at the facility.

(b) Emission points associated with the facilities or changes shall be located at least 100 feet from any off-plant receptor*.

(c) New or increased emissions, including fugitives, of chemicals shall not be emitted in a quantity greater than five tons per year nor in a quantity greater than E as determined using the equation E = L/K and the following table.

D, Feet	K
100	326
200	200
300	139
400	104
500	81
600	65
700	54
800	46
900	39
1,000	34
2,000	14
3,000 or more	8

E = maximum allowable hourly emission, and never to exceed 6 pounds per hour.

L = value as listed or referenced in Table 118A.

K = value from the table on this page. (interpolate intermediate values)

D = distance to the nearest off-plant receptor.

(d) Notification must be provided using Form PI-7 within 10 days following the installation or modification of the facilities. The notification shall include a description of the project, calculations, and data identifying specific chemical names, L values, D values, and a description of pollution control equipment, if any.

(e) The facilities in which the following chemicals will be handled shall be located at least 300 feet from the nearest property line and 600 feet from any off-plant receptor and the cumulative amount of any of the following chemicals resulting from one or more authorizations under this exemption (but not including permit authorizations) shall not exceed 500 pounds on the plant property and all listed chemicals shall be handled only in unheated containers operated in compliance with the United States Department of Transportation regulations (49 Code of Federal Regulations Parts 171 through 178): acrolein, ammonia, arsine, boron trifluoride, bromine, carbon disulfide, chlorine, chlorine dioxide, chlorine trifluoride, chloroacetaldehyde, chloropicrin, chloroprene, diazomethane, diborane, dimethylhydrazine, ethyl mercaptan, fluorine, formaldehyde, hydrogen bromide, hydrogen chloride, hydrogen cyanide, hydrogen fluoride, hydrogen selenide, hydrogen sulfide, ketene, methylamine, methyl bromide, methylhydrazine, methyl isocyanate, methyl mercaptan, nickel carbonyl, nitric oxide, nitrogen dioxide, oxygen difluoride, ozone, pentaborane, perchloromethyl mercaptan, perchloryl fluoride, phosgene, phosphine, phosphorus trichloride, selenium hexafluoride, stibine, liquified

sulfur dioxide, sulfur pentafluoride, and tellurium hexafluoride. Containers of these chemicals may not be vented or opened directly to the atmosphere at any time.

(f) For physical changes or modifications to existing facilities, there shall be no changes or additions of air pollution abatement equipment.

(g) Visible emissions, except uncombined water, to the atmosphere from any point or fugitive source shall not exceed 5.0% opacity in any five-minute period.

* Off-plant receptor means any recreational area or residence or other structure not occupied or used solely by the owner or operator of the facilities or the owner of the property upon which the facilities are located.

TABLE 118A
LIMIT VALUES (L) FOR USE WITH STANDARD EXEMPTION 118

Values included in this table represent screening levels for determining the applicability of Standard Exemption 118 and other standard exemptions using the Exemption 118 equation. The values are not to be interpreted as acceptable health effects values relative to the issuance of construction permits, special permits, or operating permits under 30 TAC Chapter 116.

Compound	Limit (L) Milligrams Per Cubic Meter	Compound	Limit (L) Milligrams Per Cubic Meter
Acetone	590	Acetaldehyde	9
Acetone Cyanohydrin	4	Acetonitrile	34
Acetylene	2662	Adiponitrile	18
Aldrin	0.15	Sec-Amyl Acetate	1.1
Arsenic	0.01	Benzene	3
Beryllium and Compounds	0.0005	Butyl Acrylate	19
Butyl Glycidyl Ether	30	Butyl Mercaptan	0.3
Butyraldehyde	1.4	Butyric Acid	7.3
Butyronitrile	22	Carbon Tetrachloride	12
Chloroform	10	Chlorophenol	0.2
Chloroprene	3.6	Chromic Acid	0.05
Chromium and Compounds	0.025	Coal Tar Pitch Volatiles	0.1
Creosote	0.1	Cresol	0.12
Cumene	43	o-Dichlorobenzene	180
p-Dichlorobenzene	108	1,2-dichloroethylene	79
Dicyclopentadiene	3.1	Diethylaminoethanol	5.5
Diisobutyl Ketone	140	Dimethyl Aniline	6.4
Dimethylhydrazine	0.15	Dioxane	3.6
Dipropylamine	8.4	Ethyl Acrylate	0.5
Ethylene Dibromide	1	Ethylene Glycol Dinitrate	0.1
Ethylene Oxide	0.18	Ethyl Mercaptan	0.15
Ethyl Sulfide	1.6	Fibrous Glass Dust	5
Gylcolonitrile	5	Heptane	350
Hydrazine	0.04	Hydrogen Chloride	1
Hydrogen Sulfide	1.1	Isoamyl Acetate	13

TABLE 118A
LIMIT VALUES (L) FOR USE WITH STANDARD EXEMPTION 118

Isoamyl Alcohol	15	Isobutyronitrile	22
Isophorone Diisocyanate	0.045	Kepone	0.001
Kerosene	100	Malononitrile	8
Mercury, Inorganic	0.05	Mesityl Oxide	40
Methyl Acrylate	1.7	Methyl Amyl Ketone	5.8
Methyl Butyl Ketone	4	Methyl Disulfide	2.2
Methylenebis (Chloroaniline) MOCA	0.003	Methylenebis (Phenyl isocyanate)	0.05
Methylene Chloride	26	Methylhydrazine	0.08
Methyl Isoamyl Ketone	5.8	Methyl Mercaptan	0.3
Methyl Methacrylate	34	Methyl Propyl Ketone	530
Methyl Sulfide	0.5	Mineral Spirits	350
Naphtha	350	Nickel, Inorganic Compounds	0.015
Nitroglycerine	0.1	Nitropropane	36
Octane	350	Parathion	0.05
Pentane	350	Perchloroethylene	33.5
Petroleum Ether	350	Phenyl Glycidyl-Ether	5
Phenylhydrazine	0.6	Phenyl Mercaptan	0.4
Propionitrile	14	Propyl Acetate	281
Propylene Oxide	5	Propyl Mercaptan	0.08
Stoddard Solvent	350	Styrene	21
Succinonitrile	20	Tolidine	0.02
Trichloroethylene	135	Trimethylamine	0.1
Valeric Acid	0.34	Vinyl Acetate	15
Vinyl Chloride	2		

The time weighted average Threshold Limit Value)TLV) published by the American Conference of Governmental Industrial Hygienists (ACGIH), (1985-1986 Edition) shall be used for compounds not included in the table. Standard Exemption 118 cannot be used if the compound is not listed in the table or does not have a published TLV in the ACGIH.

APPENDIX C

ANALYTICAL DATA REPORTS 1 THROUGH 5

PARSONS ENGINEERING SCIENCE, INC.

1700 Broadway, Suite 900 • Denver, Colorado 80290 • (303) 831-8100 • Fax: (303) 831-8208

May 29, 1997

Mr. Jim Gonzales
AFCEE/ERT
3207 North Road, Building 532
Brooks AFB, Texas 78235-5363

RE: Air Force Contract No. F41624-94-D-8136, Order 02803
Air Conformity Determination of Flameless Thermal Oxidation and Internal Combustion Engine for VOC Off-Gas Abatement
Analytical Data Report No. 1, Building 181, AFP4, TX CDRL A007A

Dear Mr. Gonzales:

Please find enclosed two copies of Tables 1, 2, and 3 which constitute Analytical Data Report No. 1 prepared by Parsons Engineering Science, Inc. (Parsons ES) for the vapor samples collected during the month of April 1997, during the startup of the flameless thermal oxidation (FTO) treatment unit at Building 181, Air Force Plant (AFP) 4, Texas. The FTO treatment began treating contaminated soil vapors at 16:00 hours on April 19, 1997. The startup samples were collected using the revised sampling procedures described in Parsons ES's March 13, 1997 letter to Mr. Chuck Wright (Thermatrix, Inc.). The volatile organic compound (VOC) destruction efficiency of the FTO Unit, calculated using April 1997 data, exceeded 99.87 percent of all targeted compounds. This data report is being sent within 6 working days of receipt of the preliminary analytical laboratory results report.

Several unexpected VOCs were detected by the analytical laboratory in the April 22 and 23, 1997 effluent soil gas samples. These compounds include 1,2,4-trimethylbenzene, 2-butanone, 2-propanol, acetone, benzene, chloroform, chloromethane, ethylbenzene, freon 11, heptane, m,p-xylene, o-xylene, tetrahydrafuran, and toluene. Tetrahydrafuran was also detected in the effluent of the startup samples at Plattsburgh AFB, but was not detected in subsequent sampling events. Tetrahydrafuran is a solvent for high-grade polymers, especially polyvinyl chloride (PVC) solvents (MERCK and Co, Inc. 1983, page 1318), and may be generated from the incomplete combustion of PVC solvent welding compounds which were used to connect the FTO unit to the SVE system. Acetone was the only compound detected in the effluent sample collected on April 25, 1997. Based on our experience at Plattsburgh AFB, Parsons ES believes that the detections of unexpected compounds in the effluent samples will not be a continuing problem. However, we will continue to monitor this closely.

Hydrochloric acid (HCl) was analyzed for in the effluent vapor samples collected on April 23 and 25, 1997, and was observed at a concentration of 0.17 milligrams per liter (mg/L) and not detected, respectively. During the week of the FTO startup the average HCl emission from the scrubber system was 0.022 pound per hour (lb/hr).

The April 1997 data represent the following FTO treatment unit operating conditions:

- On April 16, 1997, Mr. Steve Archabal and Mr. Mark Vessely traveled to AFP 4, TX. On this date, Mr. Archabal and Mr. Vessely began initial soil gas measurements, piping assembly, and met with Lone Start Electric to coordinate the electrical installation.

- On April 16, 1997, Gauger Heavy Haul and Rigging, Inc. picked up the FTO treatment unit at the Thermatrix, Inc. facility in Knoxville, TN to transport the unit to AFP 4, TX.

- On April 17, 1997, Mr. Archabal and Mr. Vessely continued soil gas measurements and piping assembly. Lone Star Electrical began the installation of electrical service for the FTO treatment unit. Mr. Jim Gonzales (AFCEE/ERT) arrive at the site in the afternoon.

- At 8:30 a.m., on April 18, 1997, Gauger Heavy Haul and Rigging, Inc. delivered the FTO treatment unit to AFP 4. Parsons ES prepared the FTO unit for operation, and Lone Star Electric completed the installation of the electrical service to the FTO treatment unit. Mr. Chris Baer (Thermatrix, Inc.) arrived on site during the afternoon to support the startup of the FTO treatment unit.

- On April 19, 1997, the FTO treatment unit was placed in the pre-heat mode and began extracting soil vapors at 16:00 hours.

- On April 20, 1997, Mr. Gonzales returned to San Antonio, TX. A severe thunderstorm caused a power outage at AFP 4 at approximately 23:00 hours. The unit shutdown, but was re-started at 12:30 hours. on April 21, 1997. When the FTO treatment unit was restarted, the pH probe was not operating properly. The pH probe programmable logic controller (PLC) was reprogrammed, which resolved the problem.

- On April 22, 1997, Mr. Tom Dragoo (Parsons ES Denver) traveled to AFP 4 to assist with the optimization of the FTO treatment unit and be trained on the operation of the treatment unit so that he can support the sampling, operation, and maintenance of the unit during the demonstration and sampling period. On the evening of this date, Mr. Vessely returned to Denver, CO. On this date, Mr. Dan Kraft (Booz•Allen & Hamilton, Inc.) arrived at AFP 4 to observe the startup of the FTO treatment unit. Mr. Chris Baer returned to Knoxville, TN on the morning of April 22, 1997.

- On April 22, 1997, Parsons ES collected influent (after dilution air was added) and effluent SUMMA® canister vapor samples from the FTO treatment unit, which was extracting and treating vapors from wells UZ-1 and PZ-1 through PZ-7 during the sample collection. The samples were collected using the sampling procedures described in Parsons ES's March 13, 1997 letter to Mr. Chuck Wright (Thermatrix, Inc.). All samples collected during the operation of the FTO treatment unit at AFP 4 will be collected using these revised procedures. The samples were sent to Air Toxics, Ltd. in Folsom, California for analysis by US Environmental Protection Agency (USEPA) Method TO-14. The FTO treatment unit extracting vapors from the wells at a flow rate of approximately 105 standard cubic feet per minute (scfm). The influent VOC concentration prior to dilution air being added was measured using a photoionization detector, and was 300 parts per million by volume (ppmv).

- On April 23, 1997, Parsons ES collected post-dilution influent and effluent SUMMA® canister vapor samples from the FTO treatment unit, which was extracting and treating vapors from wells UZ-1 and PZ-1 through PZ-7 during the sample collection. The samples were sent to Air Toxics, Ltd. in Folsom, California for analysis by USEPA Method TO-14.

- On April 24, 1997, at approximately 13:00 hours, the water supply to the FTO treatment unit quench scrubber was inadvertently turned off by plant personnel. Mr. Archabal and Mr. Dragoo restarted the unit at 00:30 hours on April 25, 1997.

- On the morning of April 25, 1997, Mr. Archabal left AFP 4 Phoenix, AZ. On this date, Mr. Dragoo collected post-dilution influent and effluent SUMMA® canister vapor samples from the FTO treatment unit, which was extracting and treating vapors from wells UZ-1 through UZ-7 during the sample collection. The samples were sent to Air Toxics, Ltd. in Folsom, California for analysis by USEPA Method TO-14. During the evening of April 25, 1997, Mr. Dragoo returned to Denver, CO. The unit was extracting and treating vapors from wells UZ-1 and PZ-1 through PZ-7 at a flow rate of approximately 105 scfm. The startup and optimization period ended on this date and the demonstration and sampling period began. Parsons ES will collect samples from the FTO treatment unit approximately every 2 weeks.

Per Contracts Data Requirements List (CDRL) A007A, one reproducible copy of the enclosed data tables has been provided to AFCEE/ERS on a 3.5-inch diskette in IBM-compatible format. If you have additional questions or comments please call me at (303) 764-1919 or Mr. Steve Archabal at (602) 852-9110.

Sincerely,

PARSONS ENGINEERING SCIENCE, INC.

Peter R. Guest, P.E.
Project Manager

Enclosures

c.c.: Mr. Mike Deaton, HSC/PKVAB (LOT only)
Mr. Robert Garza, AFCEE/ERS (LOT and diskette only)
Mr. Dan Kraft, Booz•Allen, & Hamilton, Inc.
Mr. Brady Baker, AFBCA/OL3A
Mr. Steve Archabal, Parsons ES Phoenix
Mr. Chuck Wright, Thermatrix, Inc.
Mr. Jack Sullivan, Parsons ES Oklahoma

TABLE 1
DETECTED ANALYTES IN EXTRACTED VAPOR STREAM SAMPLES
APRIL 1997
FLAMELESS THERMAL OXIDATION DEMONSTRATION
BUILDING 181
AIR FORCE PLANT 4, TEXAS

	Detected Concentration (ppbv)[a]									
Analyte	Post Dilution Influent Sample AFP4-IOX-105-1 4/22/97	Effluent Sample AFP4-ESB-105-1 4/22/97	Destruction Efficiency (percent)	Post Dilution Influent Sample AFP4-IOX-105-2 4/23/97	Effluent Sample AFP4-ESB-105-2 4/23/97	Destruction Efficiency (percent)	Post Dilution Influent Sample AFP4-IOX-105-3 4/25/97	Post Dilution Influent Sample AFP4-IOX-105-3-DUP 4/25/97	Effluent Sample AFP4-ESB-105-3 4/25/97	Destruction Efficiency (percent)
1,2,4-Trimethylbenzene	ND[b]	4.6	NA[c]	ND	5.1	NA	ND	ND	ND	NA
2-Butanone	ND	35	NA	ND	ND	NA	ND	ND	ND	NA
2-Propanol	ND	110	NA	ND	ND	NA	ND	ND	ND	NA
Acetone	ND	180	NA	ND	23	NA	ND	ND	21	NA
Benzene	ND	ND	NA	ND	24	NA	ND	ND	ND	NA
Chloroform	ND	ND	NA	ND	4.2	NA	ND	ND	ND	NA
Chloromethane	ND	5.5	NA	ND	ND	NA	ND	ND	ND	NA
Ethylbenzene	ND	ND	ND	ND	10	NA	ND	ND	ND	NA
Freon 11	ND	7.4	NA	ND	ND	NA	ND	ND	ND	NA
Heptane	ND	ND	NA	ND	26	NA	ND	ND	ND	NA
m,p-Xylene	ND	6.3	NA	ND	29	NA	ND	ND	ND	NA
o-Xylene	ND	ND	NA	ND	11	NA	ND	ND	ND	NA
Tetrahydrofuran	ND	24	NA	ND	18	NA	ND	ND	ND	NA
Toluene	ND	30	NA	ND	110	NA	ND	ND	ND	NA
Trichloroethene	130000	ND	100	120000	ND	100.00	140000	140000	ND	100.00
THC[d]	100000	250	99.75	85000	540	99.36	100000	100000	ND	100.00

[a] ppbv = parts per billion by volume, as determined by Air Toxics, Folsom, CA using USEPA Method TO-14 GC/MS Full Scan. See Table 2 for field measurements and system operating conditions at the time of sampling.

[b] ND = Not detected.

[c] NA = Not applicable.

[d] THC = Total hydrocarbons referenced to heptane (molecular weight = 100).

TABLE 2
FIELD MEASUREMENTS AND SYSTEM OPERATING CONDITIONS
FLAMELESS THERMAL OXIDATION DEMONSTRATION
BUILDING 181
AIR FORCE PLANT 4, TX

Extraction Wells	Date	Time	Run Time Meter (hours)	Run Time Since Last Event (hours)	Cumulative Extraction Time (hours)	Cumulative System Down Time due to Unit Problems (hours)	Cumulative System Down Time due to External Problems (hours)	Possible Run Time (percent)	Dilution Valve Opening (percent)	Flow Rate Into Oxidizer (scfm)	Inlet Field VOC Concentration Pre-Dilution (ppmv)	Inlet Field VOC Concentration Post-Dilution (ppmv)	Comments
PZ-1, PZ-4, UZ-1	4/19/97	1600		0	0	0	0	0		115		560	
PZ-1, PZ-4, UZ-1	4/20/97	800		16	16	0	0	100		115		850	
All	4/20/97	930		1.5	17.5	0	0	100		105		340	
All	4/20/97	1400		4.5	22	0	0	100		105		305	
All	4/20/97	1815		4.25	26.25	0	0	100					Unit down due to loss of pH signal - 4/20/97, 18:15 - 4/21/97 16:50
All	4/21/97	1650		0	26.25	21.25	0	55		105		293	
All	4/22/97	900	3034.5	17	43.25	21.25	0	67	16.5	105		320	
All	4/22/97	1545		6.75	50	21.25	0	70	24.2	105	280	245	Collected influent and effluent VOC samples
All	4/23/97	1200		20.25	70.25	21.25	0	77		105	215	205	Collected influent VOC and effluent VOC and HCL samples
All	4/24/97	1300		25	95.25	21.25	0	82					Unit autoshutdown due to loss of external water supply
All	4/25/97	0000		0	95.25	21.25	11	75		105			Unit restarted and in run mode on soil vapor
All	4/25/97	1600		16	111.25	21.25	11	78		105	303	287	Collected influent VOC and effluent VOC and HCL samples
All	5/8/97	1800	3423.6	312	423.25	21.25	11	93	40	105	230	123	Collected influent VOC and effluent VOC and HCL samples
All	5/9/97	940	3439.3	15.7	438.95	21.25	11	93	0	105		233	
All	5/12/97	1100	3513.9	74.6	513.55	21.25	11	94					Unit auto shutdown due to faulty pump in water discharge tank
All	5/19/97	1800	3520.8	0	513.55	21.25	190.76	71	0	105			Unit restarted and placed in run mode
All	5/20/97	0715	3533.5	12.7	526.25	21.25	190.76	71	0	105			
All	5/20/97	1115	3537.5	4	530.25	21.25	190.76	71	0	105			

TABLE 3
HYDROCARBON MASS REMOVAL AND EMISSIONS
FLAMELESS THERMAL OXIDATION DEMONSTRATION
BUILDING 181
AIR FORCE PLANT 4, TX

Date Sampled	Extraction Wells	Days of Operation	Influent THC[a] Concentration (ppmv)[b]	Influent THC[a] Concentration (µg/L)[c]	Flow Rate (scfm)	Effluent THC Concentration (ppmv)	Effluent THC Concentration (µg/L)	Pounds of THC Removed	Total Daily THC Emissions[b] (pounds/day)	Effluent HCL Concentration (mg/L)	Total Daily HCl Emissions (pound/hour)
4/22/97	PZ-1-PZ-7, and UZ-1	2.08	100	416	105	0.25	1.0	8	0.01	NA[d]	0
4/23/97	PZ-1-PZ-7, and UZ-1	0.84	85	353	105	0.54	2.2	3	0.02	0.17	0.066
4/25/97	PZ-1-PZ-7, and UZ-1	1.71	100	416	105	0.00	0.0	7	0.00	ND[e]	0
	Total =	4.64					Total =	18			

[a] Values given are for total hydrocarbons (THC) referenced to heptane (molecular weight =100) after addition of dilution air.

[b] ppmv = parts per million by volume, as determined by the analytical laboratory.

[c] µg/L = micrograms per liter, as determined by the analytical laboratory.

[d] NA = not analyzed.

[e] ND = not detected.

PARSONS ENGINEERING SCIENCE, INC.

[illegible] Boulevard, Suite 900 • Denver, Colorado 80290 • (303) 831-8100 • Fax (303) 831-8208

June 10, 1997

Mr. Jim Gonzales
AFCEE/ERT
3207 North Road, Building 532
Brooks AFB, Texas 78235-5363

RE: Air Force Contract No. F41624-94-D-8136, Order 02803
Air Conformity Determination of Flameless Thermal Oxidation and Internal Combustion Engine for VOC Off-Gas Abatement
Analytical Data Report No. 2, Building 181, AFP4, TX CDRL A007A

Dear Mr. Gonzales:

Please find enclosed two copies of Tables 1, 2, and 3 which constitute Analytical Data Report No. 2 prepared by Parsons Engineering Science, Inc. (Parsons ES) for the vapor samples collected during the month of May 1997, during the demonstration of the flameless thermal oxidation (FTO) treatment unit at Building 181, Air Force Plant (AFP) 4, Texas. The volatile organic compound (VOC) destruction efficiency of the FTO unit, calculated using May 1997 data, exceeded 99.40 percent for all targeted compounds. Hydrochloric acid (HCl) was analyzed for in the effluent vapor sample and was not detected. This data report is being sent within 6 working days of receipt of the analytical laboratory results report.

Several unexpected VOCs were detected by the analytical laboratory in the May 8, 1997 effluent soil gas sample. These compounds, which also were detected in the April effluent samples, include 1,2,4-trimethylbenzene, 2-butanone, acetone, ethanol, tetrahydrafuran, and toluene. Tetrahydrafuran also was detected in the startup effluent samples at Plattsburgh AFB, but was not detected in subsequent sampling events. Tetrahydrafuran is a solvent for high-grade polymers, especially polyvinyl chloride (PVC) solvents (MERCK and Co., Inc. 1983, page 1318), and may be generated from the incomplete combustion of PVC solvent welding compounds that were used to connect the FTO unit to the SVE system. Based on our experience at Plattsburgh AFB, Parsons ES believes that the detections of unexpected compounds in the effluent samples will not be a continuing problem. However, we will continue to monitor this closely.

The May 1997 data represent the following FTO treatment unit operating conditions:

- On May 8, 1997, Mr. Mark Vessely traveled to AFP 4, Texas to conduct the monthly soil gas sampling. Mr. Vessely measured oxygen, carbon dioxide, and total volatile hydrocarbon (TVH) concentrations, and vacuum pressure at several monitoring wells, and collected influent and effluent samples from the FTO unit at 1800 hours. The FTO unit was extracting and treating vapors from wells UZ-1 and PZ-1 through PZ-7 at the time of sample collection. The samples were sent to Air Toxics, Ltd. in Folsom, California for VOC analysis by USEPA Method TO-14.

- On May 12, 1997, Mr. Mark Vessely (Parsons ES Denver) was informed by Mr. Luke Gilpin (Air Force Plant 4 point of contact), that the FTO treatment unit shut down at approximately 1100 hours on May 12, 1997. Mr. Steve Archabal (Parsons ES Phoenix) contacted Mr. Gilpin to discuss the shut down. Mr. Gilpin said that the Building 181 groundwater treatment system air stripper sump had filled up as a result of the float switch failing. The quench/scrubber of the FTO unit discharges to the air stripper sump. Therefore, the quench/scrubber of the FTO treatment system shut down due to the high level in the FTO quench tank that resulted from high pressure head at the discharge sump.

- On May 13, 1997 the air stripper float switch was repaired by IT Corporation.

- On May 16, 1997, Mr. Luke Gilpin contacted Mr. Pete Guest (Parsons ES) via e-mail to relate that IT had ordered another controller for to address a new problem. The controller delivery date for the air stripper sump pump was estimated to be May 20 or 21, 1997. Mr. Gilpin requested that Parsons ES contact Mr. Dave Corden with IT to discuss the schedule for the repair. On this date, Mr. Mark Vessely contacted Mr. Corden. Mr. Corden said that the new controller should be delivered on May 19th, and would be installed on that same day.

- On May 19, 1997, Mr. Mark Vessely traveled to AFP 4 to re-start the FTO treatment unit. Mr. Vessely arrived on site at approximately 1030 hours, and the unit was in the pre-heat mode at 1200 hours. At 1800 hours, the FTO unit was connected to and began extracting and treating vapors from wells UZ-1 and PZ-1 through PZ-7.

- On May 20, 1997, Mr. Vessely monitored the operation of the FTO treatment unit and found the unit to be operating satisfactorily. On the afternoon of this date, Mr. Vessely left AFP 4 and returned to Denver.

- On May 27, 1997, Mr. Gilpin contacted Mr. Mark Vessely to inform him that the FTO unit had shut down over the weekend, and that the propane level was at zero percent. Fuel exhaustion was determined to be the cause of the shutdown, and it was determined from the run-time meter that the unit shutdown at approximately 1200 hours on May 25, 1997.

- On May 28, 1997, Mr. Vessely contacted Mr. Charlie Bullard of Joe Rider Propane, Inc., to determine why the propane tank was not refilled as scheduled. Mr. Bullard stated that they had stopped refilling the tank during the previous shutdown period and had spoken with an employee at the Building 181 facility, who informed them that Parsons ES would contact them when propane was needed. Neither, Parsons ES or Mr. Gilpin were aware of this conversation. Mr. Vessely requested that Mr. Bullard discuss any questions regarding the FTO fuel supply directly with Parsons ES. Mr. Vessely also emphasized the importance of maintaining an adequate fuel supply for the FTO treatment unit.

- On May 29, 1997, Mr. Bullard refilled the FTO propane tank.

- On June, 2, 1997, Mr. Vessely and Mr. Tom Dragoo of Parsons ES traveled to AFP 4 to re-start the FTO treatment unit. Mr. Vessely and Mr. Dragoo arrived on site at approximately 1030 hours, and the unit was in the pre-heat mode at 1130 hours. At 1945 hours, the FTO unit was connected to and began extracting and treating vapors from wells UZ-1 and PZ-1 through PZ-7.

Per Contracts Data Requirements List (CDRL) A007A, one reproducible copy of the enclosed data tables has been provided to AFCEE/ERS on a 3.5-inch diskette in IBM-compatible format. If you have additional questions or comments please call me at (303) 764-1919 or Mr. Steve Archabal at (602) 852-9110.

Sincerely,

PARSONS ENGINEERING SCIENCE, INC.

Peter R. Guest

Peter R. Guest, P.E.
Project Manager

Enclosures

c.c.: Mr. Mike Deaton, HSC/PKVAB (LOT only)
Mr. Robert Garza, AFCEE/ERS (LOT and diskette only)
Mr. Dan Kraft, Booz•Allen, & Hamilton, Inc.
Mr. Luke Gilpin, Air Force Plant 4, Texas
Mr. John Doepker, ASC/EMVR
Mr. Steve Archabal, Parsons ES Phoenix
Mr. Chuck Wright, Thermatrix, Inc.
Mr. Jack Sullivan, Parsons ES Oklahoma

TABLE 1
DETECTED ANALYTES IN EXTRACTED VAPOR STREAM SAMPLES
MAY 1997
FLAMELESS THERMAL OXIDATION DEMONSTRATION
BUILDING 181
AIR FORCE PLANT 4, TEXAS

	Detected Concentration (ppbv)[a]		
Analyte	Post-Dilution Influent Sample AFP4-IOX-105-04 5/8/97	Effluent Sample AFP4-ESB-105-04 5/8/97	Destruction Efficiency (percent)
1,2,4-Trimethylbenzene	ND[b]	5.8	NA[c]
2-Butanone	ND	21	NA
Acetone	ND	46	NA
Ethanol	ND	44	NA
Tetrahydrofuran	ND	20	NA
Toluene	ND	7.3	NA
Trichloroethene	67000	ND	100
THC[d]	60000	360	99.40

[a] ppbv = parts per billion by volume, as determined by Air Toxics, Folsom, CA using USEPA Method TO-14 GC/MS Full Scan. See Table 2 for field measurements and system operating conditions at the time of sampling.

[b] ND = Not detected.

[c] NA = Not applicable.

[d] THC = Total hydrocarbons referenced to heptane (molecular weight = 100).

TABLE 2
FIELD MEASUREMENTS AND SYSTEM OPERATING CONDITIONS
FLAMELESS THERMAL OXIDATION DEMONSTRATION
BUILDING 181
AIR FORCE PLANT 4, TEXAS

Extraction Wells	Date	Time	Run Time Meter (hours)	Run Time Since Last Event (hours)	Cumulative Extraction Time (hours)	Cumulative System Down Time due to Unit Problems (hours)	Cumulative System Down Time due to External Problems (hours)	Possible Run Time (percent)	Dilution Valve Opening (percent)	Flow Rate Into Oxidizer (scfm)	Inlet Field VOC Concentration Pre-Dilution (ppmv)	Inlet Field VOC Concentration Post-Dilution (ppmv)	Comments
PZ-1, PZ-4, UZ-1	4/19/97	1600		0	0	0	0	0		115		560	
PZ-1, PZ-4, UZ-1	4/20/97	800		16	16	0	0	100		115		850	
All	4/20/97	930		1.5	17.5	0	0	100		105		340	
All	4/20/97	1400		4.5	22	0	0	100		105		305	
All	4/20/97	1815		4.25	26.25	0	0	100					Unit down due to loss of pH signal - 4/20/97, 18:15 - 4/21/97 16:50
All	4/21/97	1650		0	26.25	21.25	0	55		105		293	Unit restarted and in run mode on soil vapor
All	4/22/97	900	3034.5	17	43.25	21.25	0	67	16.5	105		320	
All	4/22/97	1545		6.75	50	21.25	0	70	24.2	105	280	245	Collected influent and effluent VOC samples
All	4/23/97	1200		20.25	70.25	21.25	0	77		105	215	205	Collected influent VOC and effluent VOC and HCL samples
All	4/24/97	1300		25	95.25	21.25	0	82					Unit autoshutdown due to loss of external water supply
All	4/25/97	0000		0	95.25	21.25	11	75		105			Unit restarted and in run mode on soil vapor
All	4/25/97	1600		16	111.25	21.25	11	78		105	303	287	Collected influent VOC and effluent VOC and HCL samples
All	5/8/97	1800	3423.6	312	423.25	21.25	11	93	40	105	230	123	Collected influent VOC and effluent VOC and HCL samples
All	5/9/97	940	3439.3	15.7	438.95	21.25	11	93	0	105		233	
All	5/12/97	1100	3513.9	74.6	513.55	21.25	11	94					Unit auto shutdown due to faulty pump in water discharge tank
All	5/19/97	1800	3520.8	0	513.55	21.25	190.76	71	0	105			Unit restarted and placed in run mode
All	5/20/97	0715	3533.5	12.7	526.25	21.25	190.76	71	0	105			
All	5/20/97	1115	3537.5	4	530.25	21.25	190.76	71	0	105			
All	5/25/97[a]	1200[a]	3658.8	121.3	651.55	21.25	190.76	75					Unit auto shutdown due to empty propane tank
All	6/2/97	1945	3665.9	0	651.55	220.7	190.76	61	12	105	102	36.1	Unit restarted and placed in run mode
All	6/3/97	0815	3678.4	12.5	664.05	220.7	190.76	62	22.5	105	315	280	Collected influent and effluent VOC samples

[a] Approximate.

TABLE 3
HYDROCARBON MASS REMOVAL AND EMISSIONS
FLAMELESS THERMAL OXIDATION DEMONSTRATION
BUILDING 181
AIR FORCE PLANT 4, TEXAS

Date Sampled	Extraction Wells	Days of Operation	Influent THC[a] Concentration (ppmv)[b]	Influent THC[a] Concentration (µg/L)[c]	Flow Rate (scfm)	Effluent THC Concentration (ppmv)	Effluent THC Concentration (µg/L)	Pounds of THC Removed	Total Daily THC Emissions[b] (pounds/day)	Effluent HCL Concentration (mg/L)	Total Daily HCl Emissions (pounds/hour)
4/22/97	PZ-1-PZ-7, and UZ-1	2.08	100	416	105	0.25	1.0	8	0.01	NA[d]	NA
4/23/97	PZ-1-PZ-7, and UZ-1	0.84	85	353	105	0.54	2.2	3	0.02	0.17	0.066
4/25/97	PZ-1-PZ-7, and UZ-1	1.71	100	416	105	0.00	0.0	7	0.00	ND[e]	0
5/8/97	PZ-1-PZ-7, and UZ-1	13.00	60	249	105	0.36	1.5	31	0.01	ND	0
	Total =	17.64					Total =	48			

[a] Values given are for total hydrocarbons (THC) referenced to heptane (molecular weight =100) after addition of dilution air.

[b] ppmv = parts per million by volume, as determined by the analytical laboratory.

[c] µg/L = micrograms per liter, as determined by the analytical laboratory.

[d] NA = not analyzed.

[e] ND = not detected.

PARSONS ENGINEERING SCIENCE, INC.

1700 Broadway, Suite 900 • Denver, Colorado 80290 • (303) 831-8100 • Fax: (303) 831-8208

July 22, 1997

Mr. Jim Gonzales
AFCEE/ERT
3207 North Road, Building 532
Brooks AFB, Texas 78235-5363

RE: Air Force Contract No. F41624-94-D-8136, Order 02803
Air Conformity Determination of Flameless Thermal Oxidation and Internal Combustion Engine for VOC Off-Gas Abatement
Analytical Data Report No. 3, Building 181, AFP4, TX CDRL A007A

Dear Mr. Gonzales:

Please find enclosed two copies of Tables 1, 2, and 3 which constitute Analytical Data Report No. 3 prepared by Parsons Engineering Science, Inc. (Parsons ES) for the vapor samples collected during the month of June 1997, during the demonstration of the flameless thermal oxidation (FTO) treatment unit at Building 181, Air Force Plant (AFP) 4, Texas. The volatile organic compound (VOC) destruction efficiency of the FTO unit, calculated using June 1997 data, exceeded 99 percent for all targeted compounds. Effluent vapor is no longer being monitored for hydrochloric acid (HCL) since daily emissions are negligible. This data report is being sent within 2 working days of receipt of the analytical laboratory results report for the vapor samples collected on June 30, 1997.

Several unexpected VOCs were detected by the analytical laboratory in the June 1997 effluent soil gas samples. These compounds, which also were detected in the May effluent sample but at higher concentrations, include 1,2,4-trimethylbenzene, 2-butanone, acetone, and toluene. Additionally ethanol and tetrahydrafuran were detected in the May effluent sample but were not detected in any of the June samples. Based on our experience at Plattsburgh AFB, Parsons ES believes that the detections of unexpected compounds in the effluent samples will not be a continuing problem. However, we will continue to monitor this closely.

The June 1997 data represent the following FTO treatment unit operating conditions:

- On June 2, 1997, Mr. Mark Vessely and Mr. Tom Dragoo (Parsons ES Denver) traveled to Air Force Plant (AFP) 4, to re-start the FTO treatment unit and conduct the every other week soil gas sampling. Mr. Vessely and Mr. Dragoo arrived on site at approximately 10:30 hours, and the unit was in the pre-heat mode at 11:30 hours. At 19:45 hours the FTO unit began extracting and treating vapors from wells UZ-1 and PZ-1 through PZ-7. During the FTO startup, a temperature meter for the quench wier was not functioning. There are two temperature meters for the quench wier and the unit can run with only one functioning. Mr. Vessely contacted Mr. Chris Baer (Thermatrix) regarding the faulty meter and the status of the FTO operation. Mr. Baer and Mr. Vessely discussed replacing the meter and Mr. Baer provided Mr. Vessely with a contact name and address to obtain a new temperature meter.

- On June 3, 1997, Mr. Vessely and Mr. Dragoo measured total volatile hydrocarbon (TVH) concentrations, and vacuum pressure at several monitoring wells, and collected influent and effluent samples from the FTO unit at 8:15 hours. The FTO unit was extracting and treating vapors from wells UZ-1 and PZ-1 through PZ-7 at the time of sample collection. The samples were sent to Air Toxics, Ltd. in Folsom, California for analysis by USEPA Method TO-14. Mr. Vessely and Mr. Dragoo monitored the operation of the FTO treatment unit and found the unit to be operating satisfactorily. On the afternoon of this date, Mr. Vessely and Mr. Dragoo left AFP 4 and returned to Denver, CO.

- On June 16, 1997, Mr. Tom Dragoo traveled to AFP 4 to conduct the biweekly (every two weeks) soil gas sampling. Mr. Dragoo measured total volatile hydrocarbon (TVH) concentrations, and vacuum pressure at several monitoring wells, and collected influent and effluent samples from the FTO unit at 11:40 and 12:05 hours, respectively. The FTO unit was extracting and treating vapors from wells UZ-1 and PZ-1 through PZ-7 at the time of sample collection. The samples were sent to Air Toxics, Ltd. in Folsom, California for analysis by USEPA Method TO-14.

- On June 17, 1997, Mr. Dragoo monitored the operation of the FTO treatment unit and found the unit to be operating satisfactorily. On the afternoon of this date, Mr. Dragoo left AFP 4 and returned to Denver, CO.

- On June 30, 1997, Mr. Mark Vessely (Parsons ES Denver) traveled to AFP 4 to conduct the biweekly soil gas sampling. Mr. Vessely measured TVH concentrations, and vacuum pressure at several monitoring wells, and collected influent and effluent samples from the FTO unit at 11:15 and 11:30 hours, respectively. The FTO unit was extracting and treating vapors from wells UZ-1 and PZ-1 through PZ-7 at the time of sample collection. The samples were sent to Air Toxics, Ltd. in Folsom, California for analysis by USEPA Method TO-14.

Per Contracts Data Requirements List (CDRL) A007A, one reproducible copy of the enclosed data tables has been provided to AFCEE/ERS on a 3.5-inch diskette in IBM-compatible format. If you have additional questions or comments please call me at (303) 764-1919 or Mr. Steve Archabal at (602) 852-9110.

Sincerely,

PARSONS ENGINEERING SCIENCE, INC.

Peter R. Guest.

Peter R. Guest, P.E.
Project Manager

Enclosures

c.c.: Mr. Mike Deaton, HSC/PKVAB (LOT only)
Mr. Robert Garza, AFCEE/ERS (LOT and diskette only)
Mr. Dan Kraft, Booz•Allen, & Hamilton, Inc.
Mr. Luke Gilpin, Air Force Plant 4, Texas
Mr. John Doepker, ASC/EMVR
Mr. Steve Archabal, Parsons ES Phoenix
Mr. Chuck Wright, Thermatrix, Inc.
Mr. Jack Sullivan, Parsons ES Oklahoma

TABLE 1
DETECTED ANALYTES IN EXTRACTED VAPOR STREAM SAMPLES
JUNE 1997
FLAMELESS THERMAL OXIDATION DEMONSTRATION
BUILDING 181
AIR FORCE PLANT 4, TEXAS

	Detected Concentration (ppbv)[a]								
Analyte	Post-Dilution Influent Sample AFP4-IOX-105-05 6/3/97	Effluent Sample AFP4-ESB-105-05 6/3/97	Destruction Efficiency (percent)	Post-Dilution Influent Sample AFP4-IOX-105-06 6/16/97	Effluent Sample AFP4-ESB-105-06 6/16/97	Destruction Efficiency (percent)	Post-Dilution Influent Sample AFP4-IOX-105-08 6/30/97	Effluent Sample AFP4-ESB-105-07 6/30/97	Destruction Efficiency (percent)
1,2,4-Trimethylbenzene	ND[b]	ND	NA[c]	ND[b]	ND	NA[c]	ND[b]	5.6	NA[c]
2-Butanone	ND	ND	NA	ND	ND	NA	ND	21	NA
Acetone	ND	32	NA	ND	20	NA	ND	ND	NA
Toluene	ND	ND	NA	ND	ND	NA	ND	6.5	NA
Trichloroethene	170,000	52	99.97	110,000	ND	100	95,000	ND	100
m,p-Xylene	ND	ND	NA	ND	ND	NA	ND	7.1	NA
THC[d]	83,000	ND	100.00	60,000	550	99.08	83,000	470	99.43

[a] ppbv = parts per billion by volume, as determined by Air Toxics, Folsom, CA using USEPA Method TO-14 GC/MS Full Scan. See Table 2 for field measurements and system operating conditions at the time of sampling.

[b] ND = Not detected.

[c] NA = Not applicable.

[d] THC = Total hydrocarbons referenced to heptane (molecular weight = 100).

TABLE 2
FIELD MEASUREMENTS AND SYSTEM OPERATING CONDITIONS
FLAMELESS THERMAL OXIDATION DEMONSTRATION
BUILDING 181
AIR FORCE PLANT 4, TEXAS

Extraction Wells	Date	Time	Run Time Meter (hours)	Run Time Since Last Event (hours)	Cumulative Extraction Time (hours)	Cumulative System Down Time due to Unit Problems (hours)	Cumulative System Down Time due to External Problems (hours)	Possible Run Time (percent)	Dilution Valve Opening (percent)	Flow Rate Into Oxidizer (scfm)	Inlet Field VOC Concentration Pre-Dilution (ppmv)	Inlet Field VOC Concentration Post-Dilution (ppmv)	Comments
PZ-1, PZ-4, UZ-1	4/19/97	1600		0	0	0	0	0		115		560	
PZ-1, PZ-4, UZ-1	4/20/97	800		16	16	0	0	100		115		850	
All	4/20/97	930		1.5	17.5	0	0	100		105		340	
All	4/20/97	1400		4.5	22	0	0	100		105		305	
All	4/20/97	1815		4.25	26.25	0	0	100					Unit down due to loss of pH signal - 4/20/97, 18:15 - 4/21/97 16:50
All	4/21/97	1650		0	26.25	21.25	0	55		105		293	Unit restarted and in run mode on soil vapor
All	4/22/97	900	3034.5	17	43.25	21.25	0	67	16.5	105		320	
All	4/22/97	1545		6.75	50	21.25	0	70	24.2	105	280	245	Collected influent and effluent VOC samples
All	4/23/97	1200		20.25	70.25	21.25	0	77		105	215	205	Collected influent VOC and effluent VOC and HCL samples
All	4/24/97	1300		25	95.25	21.25	0	82					Unit autoshutdown due to loss of external water supply
All	4/25/97	0000		0	95.25	21.25	11	75		105			Unit restarted and in run mode on soil vapor
All	4/25/97	1600		16	111.25	21.25	11	78		105	303	287	Collected influent VOC and effluent VOC and HCL samples
All	5/8/97	1800	3423.6	312	423.25	21.25	11	93	40	105	230	123	Collected influent VOC and effluent VOC and HCL samples
All	5/9/97	940	3439.3	15.7	438.95	21.25	11	93	0	105		233	
All	5/12/97	1100	3513.9	74.6	513.55	21.25	11	94					Unit auto shutdown due to faulty pump in water discharge tank
All	5/19/97	1800	3520.8	0	513.55	21.25	190.76	71	0	105			Unit restarted and placed in run mode
All	5/20/97	0715	3533.5	12.7	526.25	21.25	190.76	71	0	105			
All	5/20/97	1115	3537.5	4	530.25	21.25	190.76	71	0	105			
All	5/25/97[a]	1200[a]	3658.8	121.3	651.55	21.25	190.76	75					Unit auto shutdown due to empty propane tank
All	6/2/97	1945	3665.9	0	651.55	220.7	190.76	61	12	105	102	36.1	Unit restarted and placed in run mode
All	6/3/97	0815	3678.4	12.5	664.05	220.7	190.76	62	22.5	105	315	280	Collected influent and effluent VOC samples
All	6/16/97	1050	3992.9	314.5	978.55	220.7	190.76	70	23.5	105	183	188	Collected influent and effluent VOC samples
All	6/17/97	800	4014.7	21.8	1000.35	220.7	190.76	71	23.3	105	279	277	
All	6/30/97	1130	4329.7	315	1293.55	220.7	190.76	76	24.5	105	394	349	Collected influent and effluent VOC samples
All	6/30/97	1430	4332.7	3	1296.55	220.7	190.76	76	24.6	105	313	305	
All	7/8/97[a]	1612[a]	4526.4	193.7	1490.25	220.7	190.76	78					Unit auto shut down due to low water level in quench tank.

[a] Approximate.

TABLE 3
HYDROCARBON MASS REMOVAL AND EMISSIONS
FLAMELESS THERMAL OXIDATION DEMONSTRATION
BUILDING 181
AIR FORCE PLANT 4, TEXAS

Date Sampled	Extraction Wells	Days of Operation	Influent TCE[a] Concentration (ppmv)[b]	Influent TCE[a] Concentration (µg/L)[c]	Flow Rate (scfm)	Pounds of TCE Removed	Effluent THC[a] Concentration (ppmv)	Effluent THC[a] Concentration (µg/L)	Total Daily THC Emissions[b] (pounds/day)	Effluent HCL Concentration (mg/L)	Total Daily HCl Emissions (pounds/hour)
4/22/97	PZ-1-PZ-7, and UZ-1	2.08	130	711	105	14	0.25	1.0	0.01	NA[d]	NA
4/23/97	PZ-1-PZ-7, and UZ-1	0.84	120	656	105	5	0.54	2.2	0.02	0.17	0.066
4/25/97	PZ-1-PZ-7, and UZ-1	1.71	140	765	105	12	0.00	0.0	0.00	ND[e]	0
5/8/97	PZ-1-PZ-7, and UZ-1	13.00	67	366	105	45	0.36	1.5	0.01	ND	0
6/3/97	PZ-1-PZ-7, and UZ-1	10.03	170	929	105	88	0.00	0.0	0.00	NA	NA
6/16/97	PZ-1-PZ-7, and UZ-1	13.10	110	601	105	74	0.55	2.3	0.02	NA	NA
6/30/97	PZ-1-PZ-7, and UZ-1	14.16	95	519	105	69	0.47	2.0	0.02	NA	NA
	Total =	**54.93**			**Total =**	**307**					

[a] Values given for total hydrocarbons (THC) are referenced to heptane (molecular weight =100), TCE molecular weight is 131.5. Samples collected after addition of dilution air.

[b] ppmv = parts per million by volume, as determined by the analytical laboratory.

[c] µg/L = micrograms per liter, as determined by the analytical laboratory.

[d] NA = not analyzed.

[e] ND = not detected.

PARSONS ENGINEERING SCIENCE, INC.

1700 Broadway, Suite 900 • Denver, Colorado 80290 • (303) 831-8100 • Fax: (303) 831-8208

September 5, 1997

Mr. Jim Gonzales
AFCEE/ERT
3207 North Road, Building 532
Brooks AFB, Texas 78235-5363

RE: Air Force Contract No. F41624-94-D-8136, Order 02803
Air Conformity Determination of Flameless Thermal Oxidation and Internal Combustion Engine for VOC Off-Gas Abatement
Analytical Data Report No. 4, Building 181, AFP4, TX CDRL A007A

Dear Mr. Gonzales:

Please find enclosed two copies of Tables 1, 2, and 3 which constitute Analytical Data Report No. 4 prepared by Parsons Engineering Science, Inc. (Parsons ES) for the field data collected during the months of July and August 1997, during the demonstration of the flameless thermal oxidation (FTO) treatment unit at Building 181, Air Force Plant (AFP) 4, Texas. Influent and effluent samples were not collected during the months of July and August 1997. Tables 2 and 3 present the analytical data collected from April through June and previously reported in Data Reports 2 and 3.

The July and August 1997 data represent the following FTO treatment unit operating conditions:

- On July 8, 1997, Mr. Mark Vessely (Parsons ES Denver) was contacted by Mr. Luke Gilpin to inform him that the ICE unit shut down.

- On July 14, 1997, Mr. Tom Dragoo traveled to AFP 4 to determine the cause of the shut down of the FTO treatment unit. Mr. Dragoo determined that the FTO unit had shut down on July 8, 1997, at 16:12 hours due to a low level in the quench tank. The unit may have shut down due to a decrease in the pressure of the water supply to the unit. Mr. Dragoo also observed that the top thermocouple (TI306) was reading 2,300 degrees Fahrenheit ambient temperature, and this indicated that the thermocouple may require replacement. Mr. Dragoo contacted Mr. Chris Baer (Thermatrix, Inc.), who recommended some troubleshooting to determine if the wiring or the thermocouple was the cause of the problem.

- On July 15, 1997, Mr. Tom Dragoo met an electrician from Lone Star Electric at the site to inspect the wiring to the thermocouple. The electrician determined

that the wiring was not the problem and that the thermocouple would need to be replaced. On this date, Mr. Dragoo ordered a new thermocouple for the FTO unit.

- On August 2, 1997, Mr. Steve Archabal (Parsons ES Phoenix) and Mr. Tim McCracken (Thermatrix) traveled to AFP 4 to replace the top thermocouple in the ICE unit and troubleshoot any other problems with the FTO unit.

- On August 4, 1997, Mr. Archabal and Mr. McCracken replaced the top thermocouple and repaired the inlet water solenoid valve, the inlet vapor/fume motor, and the floodlight brackets on both lights on the FTO unit. The blower, oxidizer, and scrubber were started and checked. At 18:15 hours Mr. Archabal and Mr. McCracken left the site with the scrubber running to observe flow rate fluctuations.

- On August 5, 1997, at 08:30 hours, Mr. Archabal and Mr. McCracken placed the FTO unit in the pre-heat mode. At 16:30 hours the FTO unit was placed in the run mode and began extracting and treating vapors from wells UZ-1 and PZ-1 through PZ-7.

- On August 6, 1997, Mr. Archabal and Mr. McCracken checked the operation of the FTO system, which was running and all parameters were stable. At 10:00 hours Mr. Archabal and Mr. McCracken departed the site and the FTO unit was extracting and treating vapors from wells UZ-1 and PZ-1 through PZ-7.

- On August 8, 1997, Mr. Steve Archabal received a message from Mr. Luke Gilpin AFP 4 point-of-contact) informing him that the FTO unit had shut down. Mr. Gilpin also sent an e-mail message to Mr. Guest informing him that the unit shut down due to low flow to the scrubber, Mr. Gilpin said the unit was operating at 12:00 hours, but was not operating at 18:00 hours.

- On August 8, 1997, Mr. Pete Guest received an e-mail message from Mr. Gilpin informing him that the shut down of the FTO unit was most likely due to the float on the sump pump for IT's groundwater treatment system being stuck. This prevented the scrubber from discharging to the sump, therefore causing the FTO unit to shut down.

- On August 12, 1997, Mr. Luke Gilpin contacted Mr. Pete Guest to inform him that the propane tank was venting to the atmosphere due to the high ambient temperature. Mr. Gilpin said that he was contacted by the Plant Fire Department and requested that Parsons ES contact the propane supplier to pump propane out of the tank to prevent venting. Mr. Guest contacted Joe Rider Propane Supply Company, and the afternoon of August 12th they went to the site and pumped propane from the tank.

- On August 16, 1997, Mr. Steve Archabal traveled to AFP 4, TX to restart the FTO unit which shut down due to low flow to the scrubber.

- On August 17, 1997, at 11:00 hours, Mr. Archabal placed the FTO unit in the pre-heat mode. At 16:00 hours the FTO unit was placed in the run mode and began extracting and treating vapors from wells UZ-1 and PZ-1 through PZ-7. Mr. Archabal asked Mr. Gilpin if it would be possible to shut down IT's ground water treatment system to prevent future shut downs of the FTO unit due to the float on the sump pump for IT's groundwater treatment system sticking. This prevents the scrubber from discharging to the sump, therefore causing the FTO unit to shut down. Mr. Gilpin contacted Mr. Vic Dozzi at IT Corporation and Mr. John Doepker (ASC/EMVR), and confirmed that the groundwater treatment system could be shut down.

- On August 18, 1997, IT Corporation shut down the groundwater treatment system.

- On August 26, 1997, Luke Gilpin contacted Pete Guest to inform him the FTO treatment unit had shut down. Mr. Gilpin said that he discovered the unit was shut down at 10:00 hours on Monday, August 25, 1997, and the unit was still hot when he discovered it. Flow Indicator (FI) 421 was in the alarm position. This alarm indicates a shut down due to low flow to the scrubber, which has caused previous shut downs of the FTO unit. Mr. Gilpin will contact IT Corp. and request that they check the float switch in the discharge sump. Also, it is possible that the supply of water to the scrubber could have been discontinued.

- On August 28, 1997, Mr. Pete Guest received an e-mail message from Mr. Luke Gilpin. Mr. Gilpin said that IT Corp. representatives went to the unit on August 26, 1997, and indicated that there was nothing wrong with the float switch for their groundwater treatment system discharge sump. It was not stuck and the water level in the tank was not approaching the high level. In addition, Mr. Gilpin had the plant maintenance group check to determine out if there were any power outages or water shutoffs in the area. Mr. Gilpin said the answer to all of these questions was a "resounding no". Mr. Gilpin said he went out to the unit on August 27, 1997, and the propane level had not changed and the unit was not radiating any heat. Therefore, he must have checked the unit Monday, August 25th not long after shutdown.

There currently are not sufficient funds remaining in the budget to continue the FTO demonstration. Parsons ES is discussing the budget issue with the Air Force and Thermatrix to determine other alternatives for checking the cause of the FTO unit shut down and potentially restarting the FTO unit.

Per Contracts Data Requirements List (CDRL) A007A, one reproducible copy of the enclosed data table has been provided to AFCEE/ERS on a 3.5-inch diskette in IBM-

compatible format. If you have additional questions or comments please call me at (303) 764-1919 or Mr. Steve Archabal at (602) 852-9110.

Sincerely,

PARSONS ENGINEERING SCIENCE, INC.

Peter R. Guest

Peter R. Guest, P.E.
Project Manager

Enclosures

c.c.: Mr. Mike Deaton, HSC/PKVAB (LOT only)
Mr. Robert Garza, AFCEE/ERS (LOT and diskette only)
Mr. Dan Kraft, Booz•Allen, & Hamilton, Inc.
Mr. Luke Gilpin, Air Force Plant 4, Texas
Mr. John Doepker, ASC/EMVR
Mr. Steve Archabal, Parsons ES Phoenix
Mr. Chuck Wright, Thermatrix, Inc.
Mr. Jack Sullivan, Parsons ES Oklahoma

TABLE 1
FIELD MEASUREMENTS AND SYSTEM OPERATING CONDITIONS
FLAMELESS THERMAL OXIDATION DEMONSTRATION
BUILDING 181
AIR FORCE PLANT 4, TEXAS

Extraction Wells	Date	Time	Run Time Meter (hours)	Run Time Since Last Event (hours)	Cumulative Extraction Time (hours)	Cumulative System Down Time due to Unit Problems (hours)	Cumulative System Down Time due to External Problems (hours)	Possible Run Time (percent)	Dilution Valve Opening (percent)	Flow Rate Into Oxidizer (scfm)	Inlet Field VOC Concentration Pre-Dilution (ppmv)	Inlet Field VOC Concentration Post-Dilution (ppmv)	Comments
PZ-1, PZ-4, UZ-1	4/19/97	1600		0	0	0	0	0		115		560	
PZ-1, PZ-4, UZ-1	4/20/97	800		16	16	0	0	100		115		850	
All	4/20/97	930		1.5	17.5	0	0	100		105		340	
All	4/20/97	1400		4.5	22	0	0	100		105		305	
All	4/20/97	1815		4.25	26.25	0	0	100					Unit down due to loss of pH signal - 4/20/97, 18:15 - 4/21/97 16:50
All	4/21/97	1650		0	26.25	21.25	0	55		105		293	Unit restarted and in run mode on soil vapor
All	4/22/97	900	3034.5	17	43.25	21.25	0	67	16.5	105		320	
All	4/22/97	1545		6.75	50	21.25	0	70	24.2	105	280	245	Collected influent and effluent VOC samples
All	4/23/97	1200		20.25	70.25	21.25	0	77		105	215	205	Collected influent VOC and effluent VOC and HCL samples
All	4/24/97	1300		25	95.25	21.25	0	82					Unit auto shutdown due to loss of external water supply
All	4/25/97	0000		0	95.25	21.25	11	75		105			Unit restarted and in run mode on soil vapor
All	4/25/97	1600		16	111.25	21.25	11	78		105	303	287	Collected influent VOC and effluent VOC and HCL samples
All	5/8/97	1800	3423.6	312	423.25	21.25	11	93	40	105	230	123	Collected influent VOC and effluent VOC and HCL samples
All	5/9/97	940	3439.3	15.7	438.95	21.25	11	93	0	105		233	
All	5/12/97	1100	3513.9	74.6	513.55	21.25	11	94					Unit auto shutdown due to float switch stuck in water discharge tank (exteneral)
All	5/19/97	1800	3520.8	0	513.55	21.25	190.76	71	0	105			Unit restarted and placed in run mode
All	5/20/97	0715	3533.5	12.7	526.25	21.25	190.76	71	0	105			
All	5/20/97	1115	3537.5	4	530.25	21.25	190.76	71	0	105			
All	5/25/97[a]	1200[a]	3658.8	121.3	651.55	21.25	190.76	75					Unit auto shutdown due to empty propane tank (external)
All	6/2/97	1945	3665.9	0	651.55	21.25	390.21	61	12	105	102	36.1	Unit restarted and placed in run mode
All	6/3/97	0815	3678.4	12.5	664.05	21.25	390.21	62	22.5	105	315	280	Collected influent and effluent VOC samples
All	6/16/97	1050	3992.9	314.5	978.55	21.25	390.21	70	23.5	105	183	188	Collected influent and effluent VOC samples
All	6/17/97	800	4014.7	21.8	1000.35	21.25	390.21	71	23.3	105	279	277	
All	6/30/97	1130	4329.7	315	1293.55	21.25	390.21	76	24.5	105	394	349	Collected influent and effluent VOC samples
All	6/30/97	1430	4332.7	3	1296.55	21.25	390.21	76	24.6	105	313	305	
All	7/8/97[a]	1612[a]	4526.4	193.7	1490.25	21.25	390.21	78					Unit auto shut down due to low water level in quench tank.[b]
All	8/5/97	1630		0	1490.25	21.25	1452.72	50		105			Unit restarted and placed in run mode
All	8/8/97	1500[a]	4584	57.6	1547.85	21.25	1452.72	51					Unit auto shutdown due to float switch stuck in water discharge tank (exteneral)
All	8/17/97	1600	4590	0	1560.75	21.25	1669.72	48		105		200	Unit restarted and placed in run mode
All	8/26/97	900[a]		209	1769.75	21.25	1669.72	51					Unit auto shutdown due to low flow to the scrubber (undertermined cause at this time)

[a] Approximate.

[b] It was determined during the July 14, 1997 inspection that a thermocouple and water solenoid valve required replacement. However, the July 8, 1997 shutdown of FTO unit resulted from a loss of water supply to the scrubber system and did not result from the failure of these items.

TABLE 2
DETECTED ANALYTES IN EXTRACTED VAPOR STREAM SAMPLES
JUNE 1997
FLAMELESS THERMAL OXIDATION DEMONSTRATION
BUILDING 181
AIR FORCE PLANT 4, TEXAS

	Detected Concentration (ppbv)[a]								
Analyte	Post-Dilution Influent Sample AFP4-IOX-105-05 6/3/97	Effluent Sample AFP4-ESB-105-05 6/3/97	Destruction Efficiency (percent)	Post-Dilution Influent Sample AFP4-IOX-105-06 6/16/97	Effluent Sample AFP4-ESB-105-06 6/16/97	Destruction Efficiency (percent)	Post-Dilution Influent Sample AFP4-IOX-105-08 6/30/97	Effluent Sample AFP4-ESB-105-07 6/30/97	Destruction Efficiency (percent)
1,2,4-Trimethylbenzene	ND[b]	ND	NA[c]	ND[b]	ND	NA[c]	ND[b]	5.6	NA[c]
2-Butanone	ND	ND	NA	ND	ND	NA	ND	21	NA
Acetone	ND	32	NA	ND	20	NA	ND	ND	NA
Toluene	ND	ND	NA	ND	ND	NA	ND	6.5	NA
Trichloroethene	170,000	52	99.97	110,000	ND	100	95,000	ND	100
m,p-Xylene	ND	ND	NA	ND	ND	NA	ND	7.1	NA
THC[d]	83,000	ND	100.00	60,000	550	99.08	83,000	470	99.43

[a] ppbv = parts per billion by volume, as determined by Air Toxics, Folsom, CA using USEPA Method TO-14 GC/MS Full Scan. See Table 2 for field measurements and system operating conditions at the time of sampling.

[b] ND = Not detected.

[c] NA = Not applicable.

[d] THC = Total hydrocarbons referenced to heptane (molecular weight = 100).

TABLE 3
HYDROCARBON MASS REMOVAL AND EMISSIONS
FLAMELESS THERMAL OXIDATION DEMONSTRATION
BUILDING 181
AIR FORCE PLANT 4, TEXAS

Date Sampled	Extraction Wells	Days of Operation	Influent TCE[a] Concentration (ppmv)[b]	Influent TCE[a] Concentration (µg/L)[c]	Flow Rate (scfm)	Pounds of TCE Removed	Effluent THC[a] Concentration (ppmv)	Effluent THC[a] Concentration (µg/L)	Total Daily THC Emissions[b] (pounds/day)	Effluent HCL Concentration (mg/L)	Total Daily HCl Emissions (pounds/hour)
4/22/97	PZ-1-PZ-7, and UZ-1	2.08	130	711	105	14	0.25	1.0	0.01	NA[d]	NA
4/23/97	PZ-1-PZ-7, and UZ-1	0.84	120	656	105	5	0.54	2.2	0.02	0.17	0.066
4/25/97	PZ-1-PZ-7, and UZ-1	1.71	140	765	105	12	0.00	0.0	0.00	ND[e]	0
5/8/97	PZ-1-PZ-7, and UZ-1	13.00	67	366	105	45	0.36	1.5	0.01	ND	0
6/3/97	PZ-1-PZ-7, and UZ-1	10.03	170	929	105	88	0.00	0.0	0.00	NA	NA
6/16/97	PZ-1-PZ-7, and UZ-1	13.10	110	601	105	74	0.55	2.3	0.02	NA	NA
6/30/97	PZ-1-PZ-7, and UZ-1	14.16	95	519	105	69	0.47	2.0	0.02	NA	NA
	Total =	54.93			Total =	307					

[a] Values given for total hydrocarbons (THC) are referenced to heptane (molecular weight =100), TCE molecular weight is 131.5. Samples collected after addition of dilution air.

[b] ppmv = parts per million by volume, as determined by the analytical laboratory.

[c] µg/L = micrograms per liter, as determined by the analytical laboratory.

[d] NA = not analyzed.

[e] ND = not detected.

PARSONS ENGINEERING SCIENCE, INC.

1700 Broadway, Suite 900 • Denver, Colorado 80290 • (303) 831-8100 • Fax: (303) 831-8208

October 31, 1997

Mr. Jim Gonzales
AFCEE/ERT
3207 North Road, Building 532
Brooks AFB, Texas 78235-5363

RE: Air Force Contract No. F41624-94-D-8136, Order 02803
Air Conformity Determination of Flameless Thermal Oxidation and Internal Combustion Engine for VOC Off-Gas Abatement
Analytical Data Report No. 5, Building 181, AFP4, TX CDRL A007A

Dear Mr. Gonzales:

Please find enclosed two copies of Table 1 which constitutes Analytical Data Report No. 5 prepared by Parsons Engineering Science, Inc. (Parsons ES) for the field data collected during the months of September and October 1997, during the demonstration of the flameless thermal oxidation (FTO) treatment unit at Building 181, Air Force Plant (AFP) 4, Texas. Influent and effluent samples were not collected during this period. The FTO unit was shut down on October 15, 1997 per the request of Mr. Doepker (ASC/EMVR).

The September and October 1997 data represent the following FTO treatment unit operating conditions:

- On September 9, 1997, Mr. Phil Jones (Thermatrix) traveled to AFP 4 to troubleshoot the cause of the shut down of the FTO unit. Mr. Jones contacted Mr. Archabal and informed him that he started the scrubber and left it in the run mode overnight to observe the operation. Mr. Jones said the shut down of the unit was due to low flow of water to the scrubber. Mr. Jones will increase the flow rate of the water supply in an attempt to avoid this problem in the future.

- On September 10, 1997, at 16:30 hours, Mr. Phil Jones (Thermatrix) placed the FTO unit in the run mode. The FTO unit was extracting vapors from wells PZ-1 through PZ-7 when Mr. Jones left the site at approximately 18:30 hours. Mr. Jones said that the unit was operating satisfactorily, however he was only able to monitor the operation of the unit for 1 hour before he had to leave the site for another commitment. Generally, it is best to monitor the operation for 1 day.

- On September 22, 1997, Mr. Steve Archabal (Parsons ES Site Manager) contacted Mr. Luke Gilpin and requested Mr. Gilpin check the water flow to the scrubber of the FTO unit, and if necessary adjust the flow. On this date, Mr. Gilpin checked the flow to the scrubber and increased the flow slightly.

- On September 23, 1997, Mr. Gilpin e-mailed Mr. Pete Guest a message stating that he adjusted the flow to the scrubber on September 22, 1997, and that he checked the FTO unit on the morning of September 23rd, and the unit was operating satisfactorily. On this date, Mr. Guest forwarded this message via e-mail to Mr. Gonzales.

- As of September 30, 1997, the FTO treatment unit was operating satisfactorily at AFP 4, TX.

- On October 9, 1997, Mr. Luke Gilpin [Air Force Plant (AFP) 4 point-of-contact) left a message for Mr. Steve Archabal (Parsons ES) that the FTO treatment unit was still operating.

- On October 15, 1997, at approximately 08:15 hours, Mr. Pete Guest received a telephone call from Mr. John Doepker (ASC/EMVR) requesting to shut down the FTO unit because Jacobs Engineering Group, Inc. (Jacobs) is going to drill soil borings/wells to upgrade the SVE system at Building 181. Jacobs wants the soil gas conditions to be stable in order to make an accurate assessment of current site conditions during drilling. Mr. Doepker said that the unit needed to be shut down on October 15th, if possible. Mr. Guest responded that Parsons ES was planning to run the unit until the week of October 27th and collect the last influent and effluent samples during that week prior to demobilization. However, the project budget is running low due to the cost for propane (approximately $420 per week). Therefore, shutting the system down now would help the budget, but final samples to further evaluate the destruction efficiency of the unit would not be able to be collected. Mr. Guest left a voice mail for Mr. Gonzales to inform him of Mr. Doepker's request.

  On this date, Mr. Pete Guest and Mr. Steve Archabal (Parsons ES Phoenix) discussed if it would be possible for Jacobs to collect influent and effluent samples from the FTO unit prior to shutdown. Mr. Guest and Mr. Archabal determined that would not be feasible due to the logistics of coordinating sampling equipment and uncertainty in the sampling methods to ensure data quality. Mr. Guest and Mr. Archabal agreed that the unit could be shut down. Mr. Dave Corden (IT Corp.) contacted Mr. Archabal to receive instructions to shut down the unit. Mr. Archabal contacted Mr. Luke Gilpin to discuss shutting down the unit and the water supply.

  The FTO unit was shut down at approximately 14:30 hours on October 15, 1997.

Per Contracts Data Requirements List (CDRL) A007A, one reproducible copy of the enclosed data table has been provided to AFCEE/ERS on a 3.5-inch diskette in IBM-compatible format. If you have additional questions or comments please call me at (303) 764-1919 or Mr. Steve Archabal at (602) 852-9110.

Sincerely,

PARSONS ENGINEERING SCIENCE, INC.

Peter R. Guest

Peter R. Guest, P.E.
Project Manager

Enclosures

c.c.: Mr. Mike Deaton, HSC/PKVAB (LOT only)
Mr. Robert Garza, AFCEE/ERS (LOT and diskette only)
Mr. Dan Kraft, Booz•Allen, & Hamilton, Inc.
Mr. Luke Gilpin, Air Force Plant 4, Texas
Mr. John Doepker, ASC/EMVR
Mr. Steve Archabal, Parsons ES Phoenix
Mr. Chuck Wright, Thermatrix, Inc.
Mr. Jack Sullivan, Parsons ES Oklahoma

TABLE 1
FIELD MEASUREMENTS AND SYSTEM OPERATING CONDITIONS
FLAMELESS THERMAL OXIDATION DEMONSTRATION
BUILDING 181
AIR FORCE PLANT 4, TEXAS

Extraction Wells	Date	Time	Run Time Meter (hours)	Run Time Since Last Event (hours)	Cumulative Extraction Time (hours)	Cumulative System Down Time due to Unit Problems (hours)	Cumulative System Down Time due to External Problems (hours)	Possible Run Time (percent)	Dilution Valve Opening (percent)	Flow Rate Into Oxidizer (scfm)	Inlet Field VOC Concentration Pre-Dilution (ppmv)	Inlet Field VOC Concentration Post-Dilution (ppmv)	Comments
PZ-1, PZ-4, UZ-1	4/19/97	1600		0	0	0	0	0		115		560	
PZ-1, PZ-4, UZ-1	4/20/97	800		16	16	0	0	100		115		850	
All	4/20/97	930		1.5	17.5	0	0	100		105		340	
All	4/20/97	1400		4.5	22	0	0	100		105		305	
All	4/20/97	1815		4.25	26.25	0	0	100					Unit down due to loss of pH signal - 4/20/97, 18:15 - 4/21/97 16:50
All	4/21/97	1650		0	26.25	21.25	0	55		105		293	Unit restarted and in run mode on soil vapor
All	4/22/97	900	3034.5	17	43.25	21.25	0	67	16.5	105		320	
All	4/22/97	1545		6.75	50	21.25	0	70	24.2	105	280	245	Collected influent and effluent VOC samples
All	4/23/97	1200		20.25	70.25	21.25	0	77		105	215	205	Collected influent VOC and effluent VOC and HCL samples
All	4/24/97	1300		25	95.25	21.25	0	82					Unit auto shutdown due to loss of external water supply
All	4/25/97	0000		0	95.25	21.25	11	75		105			Unit restarted and in run mode on soil vapor
All	4/25/97	1600		16	111.25	21.25	11	78		105	303	287	Collected influent VOC and effluent VOC and HCL samples
All	5/8/97	1800	3423.6	312	423.25	21.25	11	93	40	105	230	123	Collected influent VOC and effluent VOC and HCL samples
All	5/9/97	940	3439.3	15.7	438.95	21.25	11	93	0	105		233	
All	5/12/97	1100	3513.9	74.6	513.55	21.25	11	94					Unit auto shutdown due to float switch stuck in water discharge tank (external)
All	5/19/97	1800	3520.8	0	513.55	21.25	190.76	71	0	105			Unit restarted and placed in run mode
All	5/20/97	0715	3533.5	12.7	526.25	21.25	190.76	71	0	105			
All	5/20/97	1115	3537.5	4	530.25	21.25	190.76	71	0	105			
All	5/25/97[a]	1200[a]	3658.8	121.3	651.55	21.25	190.76	75					Unit auto shutdown due to empty propane tank (external)
All	6/2/97	1945	3665.9	0	651.55	21.25	390.21	61	12	105	102	36.1	Unit restarted and placed in run mode
All	6/3/97	0815	3678.4	12.5	664.05	21.25	390.21	62	22.5	105	315	280	Collected influent and effluent VOC samples
All	6/16/97	1050	3992.9	314.5	978.55	21.25	390.21	70	23.5	105	183	188	Collected influent and effluent VOC samples
All	6/17/97	800	4014.7	21.8	1000.35	21.25	390.21	71	23.3	105	279	277	
All	6/30/97	1130	4329.7	315	1293.55	21.25	390.21	76	24.5	105	394	349	Collected influent and effluent VOC samples
All	6/30/97	1430	4332.7	3	1296.85	21.25	390.21	76	24.6	105	313	305	
All	7/8/97[a]	1612[a]	4526.4	193.7	1490.25	21.25	390.21	78					Unit auto shut down due to low water level in quench tank.[b]
All	8/5/97	1630		0	1490.25	21.25	1452.72	50		105			Unit restarted and placed in run mode
All	8/8/97	1500[a]	4584	57.6	1547.85	21.25	1452.72	51					Unit auto shutdown due to float switch stuck in water discharge tank (external)
All	8/17/97	1600	4590	0	1560.75	21.25	1669.72	48		105		200	Unit restarted and placed in run mode
All	8/26/97	900[a]		209	1699.25	21.25	1669.72	50					Unit auto shutdown due to low flow to the scrubber because of fluctuations in water supply
All	9/10/97	1630		0	1699.25	21.25	2037.22	45		105			Unit restarted and placed in run mode
All	10/15/97	1430		838	2537.25	21.25	2037.22	55					Unit shut down by IT Corporation; FTO demonstration and sampling concluded

[a] Approximate.

[b] It was determined during the July 14, 1997 inspection that a thermocouple and water solenoid valve required replacement. However, the July 8, 1997 shutdown of FTO unit resulted from a loss of water supply to the scrubber system and did not result from the failure of these items.

TABLE 2
HYDROCARBON MASS REMOVAL AND EMISSIONS
FLAMELESS THERMAL OXIDATION DEMONSTRATION
BUILDING 181
AIR FORCE PLANT 4, TEXAS

Date Sampled	Extraction Wells	Days of Operation	Influent TCE[a] Concentration (ppmv)[b]	Influent TCE[a] Concentration (µg/L)[c]	Flow Rate (scfm)	Pounds of TCE Removed	Effluent THC[a] Concentration (ppmv)	Effluent THC[a] Concentration (µg/L)	Total Daily THC Emissions[b] (pounds/day)	Effluent HCL Concentration (mg/L)	Total Daily HCl Emissions (pounds/hour)
4/22/97	PZ-1-PZ-7, and UZ-1	2.08	130	711	105	14	0.25	1.0	0.01	NA[d]	NA
4/23/97	PZ-1-PZ-7, and UZ-1	0.84	120	656	105	5	0.54	2.2	0.02	0.17	0.066
4/25/97	PZ-1-PZ-7, and UZ-1	1.71	140	765	105	12	0.00	0.0	0.00	ND[e]	0
5/8/97	PZ-1-PZ-7, and UZ-1	13.00	67	366	105	45	0.36	1.5	0.01	ND	0
6/3/97	PZ-1-PZ-7, and UZ-1	10.03	170	929	105	88	0.00	0.0	0.00	NA	NA
6/16/97	PZ-1-PZ-7, and UZ-1	13.10	110	601	105	74	0.55	2.3	0.02	NA	NA
6/30/97	PZ-1-PZ-7, and UZ-1	14.16	95	519	105	69	0.47	2.0	0.02	NA	NA
10/15/97[f]	PZ-1-PZ-7, and UZ-1	51.68	95	519	105	253	0.47	2.0	0.02	NA	NA
	Total =	106.61			Total =	560					

[a] Values given for total hydrocarbons (THC) are referenced to heptane (molecular weight =100), TCE molecular weight is 131.5.
Samples collected after addition of dilution air.

[b] ppmv = parts per million by volume, as determined by the analytical laboratory.

[c] µg/L = micrograms per liter, as determined by the analytical laboratory.

[d] NA = not analyzed.

[e] ND = not detected.

[f] No samples were collected during the final shutdown of the FTO unit: therefore, the June 30, 1997 analytical data were used for this estimate. The days of operation between June 30, 1997 and October 15, 1997 was calculated for Table 1.

APPENDIX D

VENDOR QUOTES FOR VARIOUS VAPOR TREATMENT TECHNOLOGIES

Request for Price Quotation
Soil Vapor Treatment System
Air Force Plant 4, Fort Worth, Texas

Introduction

Jacobs Engineering Group, Inc. (Jacobs) has been tasked with designing the expansion of an existing pilot soil vapor extraction (SVE) system to full-scale operation. As part of this work, Jacobs is evaluating vapor treatment options for the expanded system. The selected option may be incorporated into the overall system design, and form the basis of a construction bid package for skid-mounted off-gas treatment equipment. Jacobs requests price quotes for one to three of the vapor treatment system alternatives outlined below, operating at the two contaminant mass flow rates given below. The vapor treatment system will be located downstream from the vacuum blower, as shown on Figure A.

Waste Stream Characterization

The waste stream is vapor from the SVE system. Two potential operating regimes are anticipated: In the first regime, the vapor stream will exit the blower at a temperature of 155° F, a pressure of 1.20 atmospheres (absolute), and a flow rate of 850 cubic feet per minute. In the second regime, the vapor stream will exit the blower at a temperature of 160° F, a pressure of 1.27 atmospheres (absolute), and a flow rate of 1,140 cubic feet per minute. Jacobs anticipates that as the system operates, contaminant concentrations will decrease with time. In order to prepare cost estimates for operations, vendors shall assume that the contaminant concentration will decrease by one-half for every 3 years of operations. Samples of the pilot plant influent vapor were analyzed using EPA TO-14. Based on this analysis, the current contaminant concentrations and estimated mass flow rates are:

Contaminant	Influent Concentration (ug/l)	Operating Regime 1 Mass Flow (lbs/hr)	Operating Regime 2 Mass Flow (lbs/hr)
Trichloroethylene	1,945.67	6.37	8.46
Toluene	12.51	0.062	0.079
Benzene	10.60	0.034	0.045
Ethylbenzene	14.41	0.046	0.061
Total Xylenes	28.82	0.092	0.122
Dichlorodifluoromethane	16.41	0.052	0.070
Vinyl Chloride	8.48	0.027	0.036
Tetrachloroethene	22.51	0.072	0.096
1,2,4-Trimethylbenzene	16.31	0.052	0.069
Cis-1,2-Dichloroethene	26.72	0.085	0.114
1,2-Dichlorobenzene	10.88	0.035	0.046

JACOBS ENGINEERING GROUP INC.

DATE _____ SUBJECT _____ SHEET NO. _____

BY _____ CHKD. _____ JOB NO. _____

Figure A

Existing System:

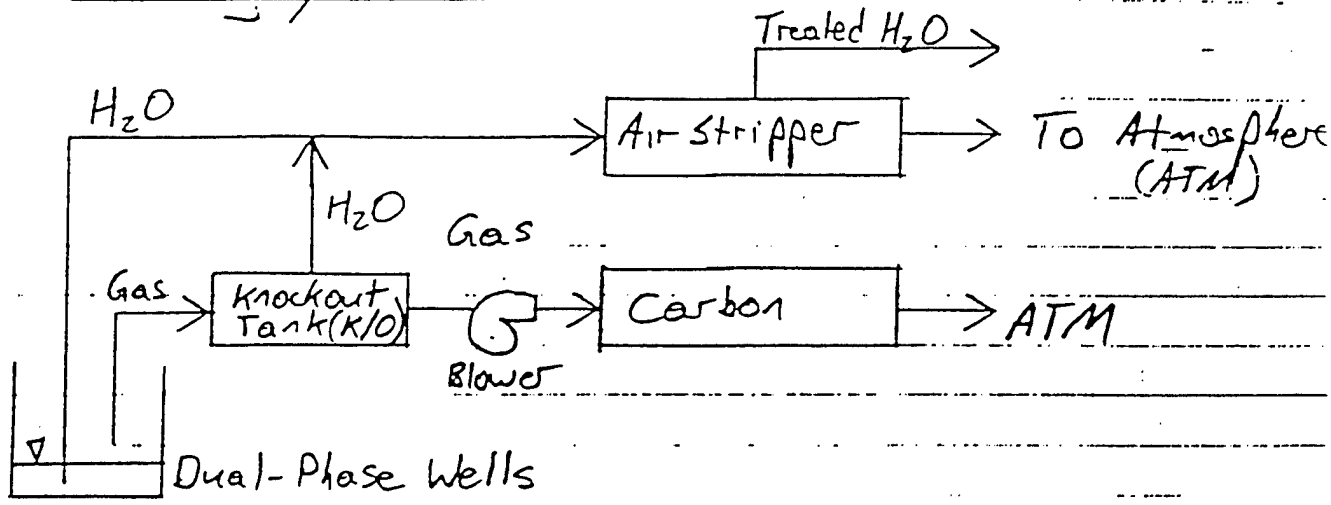

Proposed New System, Alternative 1 or 2:

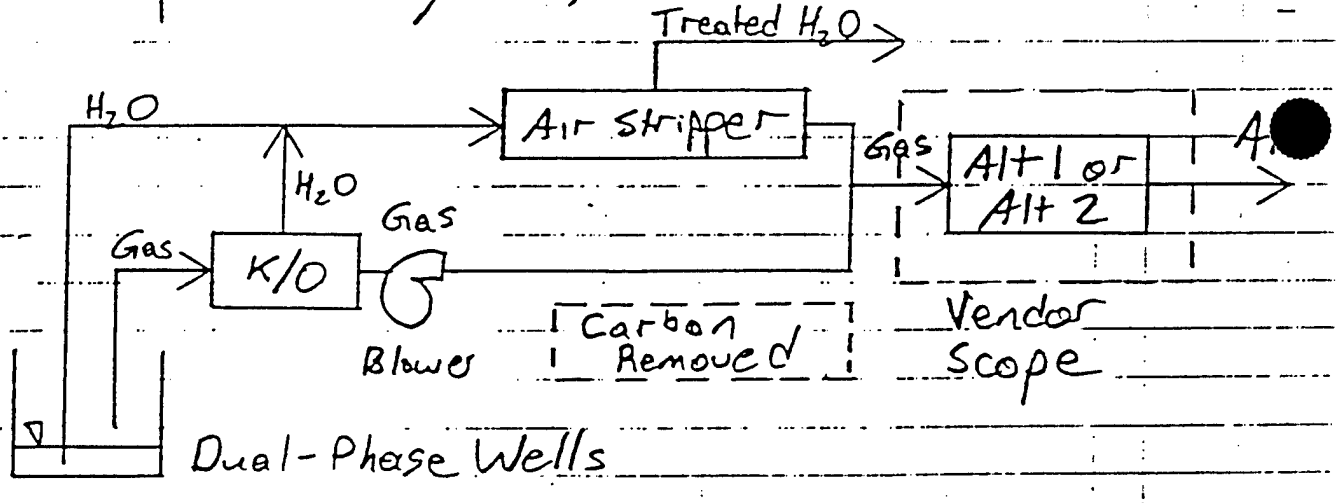

Proposed New System, Alternative 3:

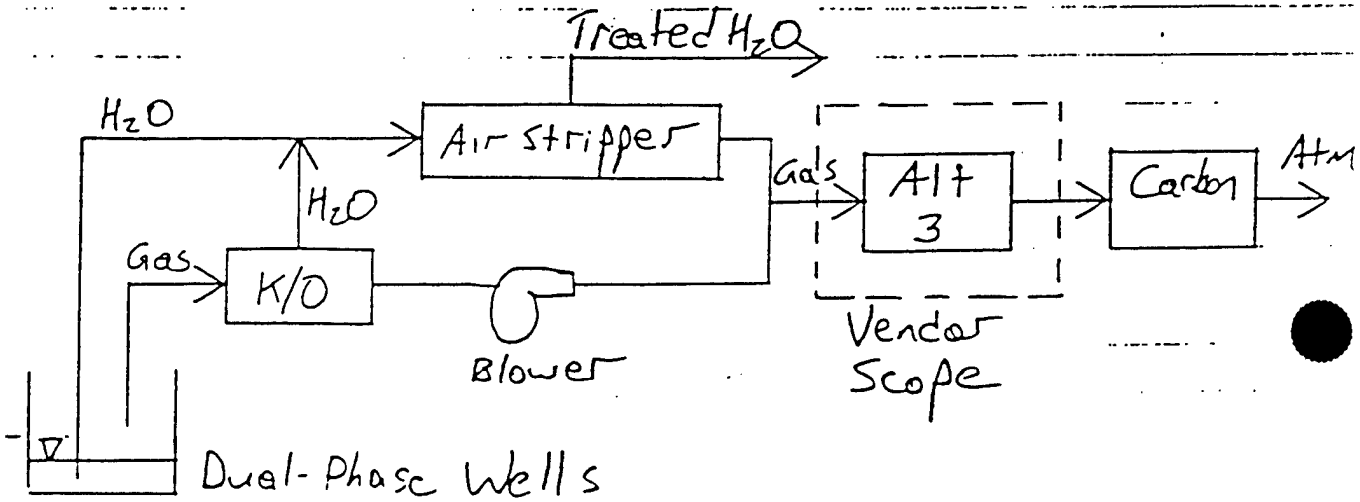

Vapor Treatment Alternative 1: Catalytic Oxidation
Under this alternative, vapor treatment would be accomplished using catalytic oxidation. The minimum required removal efficiency for all contaminants shall be 90 percent. The treated vapor shall be discharged to the atmosphere. The vapor treatment system provided by the vendor shall include a scrubber.

Vapor Treatment Alternative 2: Direct Flame Incineration
Under this alternative, vapor treatment would be accomplished in an enclosed direct-flame combustion device which is automatically controlled to maintain a minimum temperature of 1,400° F in the combustion chamber (secondary chamber if dual-chambered), and a gas retention time of 0.5 second or greater. The combustion device shall incorporate continuous temperature monitors to record the temperature of the combustion chamber (secondary chamber if dual-chambered). The vapor treatment system shall include a scrubber, if necessary.

Vapor Treatment Alternative 3: Innovative Technology Followed by Existing Vapor-Phase GAC
Under this alternative, vapor treatment would be accomplished using an innovative physical, biological, or chemical treatment process, followed by polishing with the existing vapor-phase GAC. The vendor may propose systems which attain contaminant removal efficiencies of 95, 97, and 99 percent, if these steps result in significant system cost differentials. The vendor shall specify any contaminants which cannot be treated to these levels with the proposed system. The temperature of the treated vapor stream exiting the vendor's process equipment shall not exceed 100° F during the warmest part of the year in Fort Worth, Texas.

Guidance for Cost Quotation
All process equipment, instrumentation, and controls shall be skid mounted, shop tested, and ready for installation. A physical and operational description of the proposed equipment with skid dimensions shall be provided. All equipment shall be suitable for outdoor service in Fort Worth, Texas. Capital and annual operating costs shall be clearly indicated as distinct line items. The cost for a manufacturer's representative to be present during an installation and startup period of four weeks shall be included in the capital cost. Following startup, the system shall be operated by Jacobs. The period of operations shall be assumed as 12 years, and regular operations and maintenance activities and requirements shall be listed by activity and frequency. A complete set of equipment cut sheets shall be provided with the quote. Any additional data requirements to assure a process performance quarantee shall be included with the quote. Any required process inputs, such as electricity or potable water, which are not included in the vendor's package shall be clearly indicated. All process utility requirements and consumables, such as supplemental fuel or chemical reagents, shall be clearly indicated with estimated usage rates. All process outputs, including air, water, and solids, shall be clearly indicated. All prices shall be in 1997 present worth U.S. dollars.

In addition, vendors are to provide the following information with the quotation:

- Name of firm providing quotation
- Years in business
- Size of firm with annual revenue and number of employees
- List of 5 to 10 similar applications, including:
    - Project location
    - Owner
    - System size and flow capacity
    - Contaminants treated
    - Total installed cost

Price quotes and company experience are to be submitted no later than the close of business, Monday, June 2, 1997. The contact for questions and submittals is:

Mike Havens
Jacobs Engineering Group, Inc.
600 Seventeenth St., Suite 1100N
Denver, CO 80202
Phone: (303) 620-8505
Fax: (303) 595-8857

Vendor Evaluation Summary
Building 181 SVE Vapor Treatment System Upgrades

Catalytic Combustion - Bob Twiddy.
198 Union Blvd., Suite 200
Lakewood, CO 80228

Phone (303) 914-0729
Fax (303) 914-0796

Process is catalytic oxidation followed by caustic scrubbing. Technology is proven, and Catalytic Combustion has provided 30 units for halogenated hydrocarbon vapor treatment since 1990.

Quoted capital cost is:

- $155,939 for 850 CFM unit
- $173,733 for 1,150 CFM unit

Quoted O&M cost is:

- $28,017 for 850 CFM unit
- $38,491 for 1,140 CFM unit

Vendor Evaluation Summary
Building 181 SVE Vapor Treatment System Upgrades

E Products - Stephen Hirt, Steven Fox
4390 McMenemy St
St. Paul, MN 55127

Phone (612) 490-9690
Fax (612) 490-9840

Thermal oxidizer with caustic scrubber. No company information is provided.

Quoted capital cost is:

- $143,763 for 850 CFM unit
- $143,763 for 1,150 CFM unit

Quoted annual O&M cost is:

- $87,472 for 850 CFM unit
- $116,030 for 1,140 CFM unit

Catalytic oxidizer with caustic scrubber.

Quoted capital cost is:

- $168,762 for 850 CFM unit
- $168,762 for 1,150 CFM unit

Quoted annual O&M cost is:

- $63,784 for 850 CFM unit
- $84,257 for 1,140 CFM unit

Vendor Evaluation Summary
Building 181 SVE Vapor Treatment System Upgrades

Global Technologies - Brett Archambea.
8855 North 55th Street
Milwaukee, WI 53223

Phone (414) 365-6430
Fax (414) 365-6410

Process is catalytic oxidation followed by caustic scrubbing.

Quoted capital cost is:

- $189,800 for 850 CFM unit
- $249,700 for 1,150 CFM unit

Quoted O&M cost is:

- $20,849 for 850 CFM unit
- $26,542 for 1,140 CFM unit

Vendor Evaluation Summary
Building 181 SVE Vapor Treatment System Upgrades

Enviroreps - Gene Zumberge
2921 South Downing St
Englewood, CO 80110

Phone (303) 761-5645
Fax (303) 761-0380

Vendor has proposed both the catalytic oxidizer and thermal oxidizer alternatives. O&M costs were not included, so the highest values from other similar vendors has been used.

Catalytic oxidizer with caustic scrubber.

Quoted capital cost is:

- $181,000 for 850 CFM unit
- $232,000 for 1,150 CFM unit

Not included in capital cost is:

- Field representative at startup, approximately $15,000

Total estimated capital cost is:

- $196,000 for 850 CFM unit
- $247,000 for 1,150 CFM unit

Assumed annual O&M cost is:

- $63,784 for 850 CFM unit
- $84,257 for 1,140 CFM unit

Thermal oxidizer with caustic scrubber.

Quoted capital cost is:

- $175,000 for 850 CFM unit
- $192,000 for 1,150 CFM unit

Not included in capital cost is:

- Field representative at startup, approximately $15,000

Total estimated capital cost is:

- $190,000 for 850 CFM unit
- $207,000 for 1,150 CFM unit

Assumed annual O&M cost is:

- $87,472 for 850 CFM unit
- $116,030 for 1,140 CFM unit

Vendor Evaluation Summary
Building 181 SVE Vapor Treatment System Upgrades

Thermatrix - Rich Scheig.
8335 West Woodard Drive
Lakewood, CO 80227

Phone (303) 989-3793
Fax (303) 989-3889

Thermatrix has proposed a flameless thermal oxidizer (FTO) system, and a PADRE VOC recovery system (previously known as the PURIS system). The first system evaluated is the FTO.

The FTO process uses a ceramic matrix with supplimental fuel to maintain a thermal oxidation zone. Temperatures in the oxidation zone range from 1,400° to 2,400° F, with residence times less than 0.5 seconds. A pilot study is being conducted at the SVE system with a "straight-through" GS Series FTO. Based on their current knowledge of the contaminant concentrations at the site, Thermatrix is proposing an "internal heat recovery" GR series FTO, which is more suitable. Thermatrix has many FTO units installed in Texas and elsewhere, and has been in business for 5 years.

Quoted capital cost is:

- $450,000 for 850 CFM unit
- $450,000 for 1,150 CFM unit

Not included in capital cost is:

- $8,400 for 20 days of technical field support during startup, at $420/day.

Total estimated capital cost is:

- $458,400 for 850 CFM unit
- $458,400 for 1,140 CFM unit

Quoted annual O&M cost is:

- $14,500 for 850 CFM unit
- $19,500 for 1,140 CFM unit

Not included in annual O&M cost is:

- $17,870 in caustic for 850 CFM unit, based on 12 lb/hr and $0.17/lb for NaOH
- $23,827 in caustic for 1,140 CFM unit, based on 12 lb/hr and $0.17/lb for NaOH

Total estimated annual O&M cost is:

- $32,370 for 850 CFM unit
- $43,327 for 1,140 CFM unit

The PADRE VOC process uses a thermally regenerated ion exchange resin to concentrate VOCs from the vapor stream, an acid trap to remove corrosives from the desorbed concentrate, and refrigeration to concentrate the VOC stream as a waste. The process result is typically a RCRA F-listed waste. Previous process problems with corrosion have been corrected by using the acid trap. The number of previous installations was not provided.

Quoted capital cost is:

- $200,500 for 850 CFM unit with 95 percent removal efficiency
- $291,500 for 1,150 CFM unit with 99 percent removal efficiency

Not included in capital cost is:

- $6,300 for 15 days of technical field support during startup, at $420/day.

Total estimated capital cost is:

- $206,800 for 850 CFM unit
- $297,800 for 1,140 CFM unit

Quoted annual O&M cost is:

- $5,256 for 850 CFM unit with 95 percent removal efficiency
- $8,847 for 1,140 CFM unit with 99 percent removal efficiency

Not included in annual O&M cost is:

- Hazardous waste disposal: $13,968 for 850 CFM unit - based on $0.25/lb for disposal at a cement kiln, from Laidlaw quote used in Carswell DO5 proposal.
- Operation of existing vapor-phase GAC: $76,500 for 850 CFM unit, based on 38,250 lbs/yr at $2.00/lb.
- Hazardous waste disposal: $18,822 for 1,140 CFM unit - based on $0.25/lb for disposal at a cement kiln, from Laidlaw quote used in Carswell DO5 proposal.
- Operation of existing vapor-phase GAC: $20,000 for 1,140 CFM unit at 99 percent removal, based on 10,000 lbs/yr at $2.00/lb.

Total estimated annual O&M cost is:

- $95,724 for 850 CFM unit
- $47,669 for 1,140 CFM unit

Vendor Evaluation Summary
Building 181 SVE Vapor Treatment System Upgrades

Carbon Resources (V.M. Technologies) - Kim Walsh.
80 Huntington St, Suite 407
Huntington Beach, CA 92648

Phone (714) 837-1992
Fax (714) 837-0896

Process includes UV oxidation, caustic scrubbing with ozone, and GAC with ozone regeneration. V.M. Technologies has been in business for 20 years, and has installed these systems at flow rates of up to 150,000 CFM at 36 locations. The innovative component of the process is UV oxidation of vapor. Based on information provided, the vendor will guarantee the treatment system performance.

Quoted capital cost is:

- $68,000 for 850 CFM unit operating at 95 percent removal efficiency
- $84,000 for 1,150 CFM unit operating at 95 percent removal efficiency

Not included in capital cost is:

- $10,000 for a 100 psi, 100 CFM air compressor to supply the ozone generator, per Grainger 1997, pg. 2862.
- $7,140 for 17 days of technical field support during startup.

Total estimated capital cost is:

- $85,140 for 850 CFM unit
- $101,140 for 1,140 CFM unit

Quoted annual O&M cost is:

- $4,600 for 850 CFM unit operating at 95 percent removal efficiency
- $5,020 for 1,140 CFM unit operating at 95 percent removal efficiency

Not included in annual O&M cost:

- Operation of existing vapor-phase GAC: $76,500 for 850 CFM unit operating at 95 percent removal efficiency, based on 38,250 lbs/yr at $2.00/lb.
- Operation of existing vapor-phase GAC: $102,000 for 1,140 CFM unit operating at 95 percent removal efficiency, based on 51,000 lbs/yr at $2.00/lb.

Total annual O&M:

- $81,100 for 850 CFM unit operating at 95 percent removal efficiency
- $107,020 for 1,140 CFM unit operating at 95 percent removal efficiency

Vendor Evaluation Summary
Building 181 SVE Vapor Treatment System Upgrades

Process Technologies, Inc. - Barry Brooks.
1160 Exchange St.
Boise, Idaho 83716

Phone (208) 385-0900
Fax (208) 385-7101

The first innovative technology option involves using an adsorption/desorption contaminant concentrator. The vapor treatment process has been used for TCE vapor treatment at 1 location, at flow rates of 1,000 scfm. Process Technology has been in business for 8 years.

Quoted capital cost is:

- $199,767 for 850 CFM unit with 95 percent removal efficiency
- $212,967 for 1,150 CFM unit with 95 percent removal efficiency

Not included in capital cost is:

- Field support following installation, assumed to be $7,000

Total estimated capital cost is:

- $206,767 for 850 CFM unit with 95 percent removal efficiency
- $219,967 for 1,150 CFM unit with 95 percent removal efficiency

Quoted annual O&M cost is:

- $26,364 for 850 CFM unit
- $30,771 for 1,140 CFM unit

Not included in annual O&M cost:

- Operation of existing vapor-phase GAC: $76,500 for 850 CFM unit operating at 95 percent removal efficiency, based on 38,250 lbs/yr at $2.00/lb.
- Operation of existing vapor-phase GAC: $102,000 for 1,140 CFM unit operating at 95 percent removal efficiency, based on 51,000 lbs/yr at $2.00/lb.

Total annual O&M:

- $102,864 for 850 CFM unit operating at 95 percent removal efficiency
- $132,771 for 1,140 CFM unit operating at 95 percent removal efficiency

The second innovative technology option involves using the first option system, performing a treatability study, and adding a photocatalytic oxidizer unit. Process efficiencies will presumably improve, although the vendor makes no claims. Assume the process efficiency can be improved to 97 percent following the treatability study.

Quoted capital cost is:

- $259,767 for 850 CFM unit with assumed 97 percent removal efficiency
- $272,967 for 1,150 CFM unit with assumed 97 percent removal efficiency

Not included in capital cost is:

- Field support following installation, assumed to be $7,000
- Treatability study, which was previously priced by Jacobs and PTI during preparation of AFCEE proposal for this project at a $65,000

Total estimated capital cost is:

- $331,767 for 850 CFM unit with 95 percent removal efficiency
- $344,967 for 1,150 CFM unit with 95 percent removal efficiency

Quoted annual O&M cost is:

- $35,328 for 850 CFM unit
- $39,735 for 1,140 CFM unit

Not included in annual O&M cost:

- Operation of existing vapor-phase GAC: $45,000 for 850 CFM unit operating at 97 percent removal efficiency, based on 22,500 lbs/yr at $2.00/lb.
- Operation of existing vapor-phase GAC: $60,000 for 1,140 CFM unit operating at 97 percent removal efficiency, based on 30,000 lbs/yr at $2.00/lb.

Total annual O&M:

- $80,328 for 850 CFM unit operating at 95 percent removal efficiency
- $99,735 for 1,140 CFM unit operating at 95 percent removal efficiency

Soil Vapor Treatment System Price Quotation Comparison
Building 181 SVE System, Air Force Plant 4

Result: Based on this evaluation, the best-value vapor treatment system is catalytic oxidation.

Alt	Vendor	System	Regime	Total Capital	Total Annual O&M	PW, 4%, 5 yr	PW, 4%, 12 yr	
1-CatOx	Catalytic Combustion	Catalytic Oxidation	850 CFM	$ 155,939	$ 28,017	$ 280,671	$ 418,879	
			1,140 CFM	$ 173,733	$ 38,491	$ 345,095	$ 534,971	
	E Products	Catalytic Oxidation	850 CFM	$ 168,762	$ 63,784	$ 452,728	$ 767,375	
			1,140 CFM	$ 168,762	$ 84,257	$ 543,874	$ 959,514	
	Global	Catalytic Oxidation	850 CFM	$ 189,800	$ 20,849	$ 282,620	$ 386,468	
			1,140 CFM	$ 249,700	$ 26,542	$ 367,865	$ 498,797	
	EnviroReps	Catalytic Oxidation	850 CFM	$ 196,000	$ 63,784	$ 479,966	$ 794,613	
			1,140 CFM	$ 247,000	$ 84,257	$ 622,112	$ 1,037,752	
			$458,000		$651,292	$602,511		
2-ThermOx	Thermatrix	Flameless Thermal Ox	850 CFM	$ ~~548,400~~	$ 32,370	$ ~~692,511~~	$ ~~852,192~~	$762,192
			1,140 CFM	$ ~~548,400~~	$ 43,327	$ ~~741,292~~	$ ~~955,024~~	$865,024
	E Products	Thermal Oxidizer	850 CFM	$ 143,763	$ 87,472	$ 533,188	$ 964,688	
			1,140 CFM	$ 143,763	$ 116,030	$ 660,329	$ 1,232,705	
	EnviroReps	Thermal Oxidizer	850 CFM	$ 190,000	$ 87,472	$ 579,425	$ 1,010,925	
			1,140 CFM	$ 207,000	$ 116,030	$ 723,566	$ 1,295,942	
3-Innovate	Carbon Resources	UVOX Photocatalytic	850 CFM/95%	$ 85,140	$ 81,100	$ 446,197	$ 846,264	
			1,140 CFM/95%	$ 101,140	$ 107,020	$ 577,593	$ 1,105,523	
	Thermatrix	PADRE	850 CFM/95%	$ 206,800	$ 95,724	$ 632,963	$ 1,105,170	
			1,140 CFM/99%	$ 297,800	$ 47,669	$ 510,022	$ 745,174	
	PTI	MIAB Concentrator	850 CFM/95%	$ 206,767	$ 102,864	$ 664,718	$ 1,172,146	
			1,140 CFM/95%	$ 219,967	$ 132,771	$ 811,063	$ 1,466,023	
	PTI	MIAB + Photocatalytic	850 CFM/95%+	$ 331,767	$ 80,328	$ 689,387	$ 1,085,645	
			1,140 CFM/95%	$ 344,967	$ 99,735	$ 788,987	$ 1,280,980	

Calculation of Present Worth Cost, based on 4% discount and either 5 or 12 year period:

PW, 4%, 5yr = P + (P/A, 4%, 5) = P + 4.452*A

PW, 4%, 12yr = P + (P/A, 4%, 12) = P + 9.385*A

Where: PW = present worth cost in 1997 dollars
P = present capital cost
A = annual O&M cost

The vendor quote for the Thermatrix FTO unit was incorrect on this table. Per the vendor cost summary presented earlier, the correct capital costs should be $458,000. —M. Vissel