AGARD-AG-160 Vol.1 (Issue 2)

AGARD-AG-160 Vol.1 (Issue 2)

AGARD

ADVISORY GROUP FOR AEROSPACE RESEARCH & DEVELOPMENT
7 RUE ANCELLE 92200 NEUILLY SUR SEINE FRANCE

DTIC
ELECTE
AUG 0 3 1995
S D
F

AGARDograph 160
Flight Test Instrumentation Series - Volume 1 (Issue 2)

Basic Principles of Flight Test Instrumentation Engineering

(Introduction Générale aux
Principes de Base de l'Instrumentation des Essais en Vol)

DISTRIBUTION STATEMENT A
Approved for public release;
Distribution Unlimited

This AGARDograph has been sponsored by the Flight Mechanics Panel of AGARD.

NORTH ATLANTIC TREATY ORGANIZATION

Published March 1994

Distribution and Availability on Back Cover

19950803 001

AGARD-AG-160 Vol.1 (Issue 2)

AGARD

ADVISORY GROUP FOR AEROSPACE RESEARCH & DEVELOPMENT
7 RUE ANCELLE 92200 NEUILLY SUR SEINE FRANCE

AGARDograph 160
Flight Test Instrumentation Series - Volume 1 (Issue 2)

Basic Principles of Flight Test Instrumentation Engineering

(Introduction Générale aux
Principes de Base de l'Instrumentation des Essais en Vol)

Edited by

R.W. Borek
602 E. Ovington
Lancaster
California 93534
United States

A. Pool
Leeuwerikstraat, 48
1171 TZ Badhoevedorp
The Netherlands

This AGARDograph has been sponsored by the Flight Mechanics Panel of AGARD.

North Atlantic Treaty Organization
Organisation du Traité de l'Atlantique Nord

Accesion For
NTIS CRA&I ☑
DTIC TAB ☐
Unannounced ☐
Justification
By
Distribution /
Availability Codes
Dist | Avail and / or Special
A-1

The Mission of AGARD

According to its Charter, the mission of AGARD is to bring together the leading personalities of the NATO nations in the fields of science and technology relating to aerospace for the following purposes:

— Recommending effective ways for the member nations to use their research and development capabilities for the common benefit of the NATO community;

— Providing scientific and technical advice and assistance to the Military Committee in the field of aerospace research and development (with particular regard to its military application);

— Continuously stimulating advances in the aerospace sciences relevant to strengthening the common defence posture;

— Improving the co-operation among member nations in aerospace research and development;

— Exchange of scientific and technical information;

— Providing assistance to member nations for the purpose of increasing their scientific and technical potential;

— Rendering scientific and technical assistance, as requested, to other NATO bodies and to member nations in connection with research and development problems in the aerospace field.

The highest authority within AGARD is the National Delegates Board consisting of officially appointed senior representatives from each member nation. The mission of AGARD is carried out through the Panels which are composed of experts appointed by the National Delegates, the Consultant and Exchange Programme and the Aerospace Applications Studies Programme. The results of AGARD work are reported to the member nations and the NATO Authorities through the AGARD series of publications of which this is one.

Participation in AGARD activities is by invitation only and is normally limited to citizens of the NATO nations.

The content of this publication has been reproduced
directly from material supplied by AGARD or the authors.

Published March 1994

Copyright © AGARD 1994
All Rights Reserved

ISBN 92-835-0731-2

Printed by Specialised Printing Services Limited
40 Chigwell Lane, Loughton, Essex IG10 3TZ

Preface

Soon after its founding in 1952, the Advisory Group for Aerospace Research and Development (AGARD) recognized the need for a comprehensive publication on flight test techniques and the associated instrumentation. Under the direction of the AGARD Flight Test Panel (now the Flight Mechanics Panel) a Flight Test Manual was published in the years 1954 to 1956. That manual was divided into four volumes: 1. Performance, 2. Stability and Control, 3. Instrumentation Catalog, and 4. Instrumentation Systems.

After about a decade, a study group was formed which gave advice on how to update the Flight Test Manual. Upon the advice of that group the Flight Mechanics Panel decided that updating of the instrumentation part was the most urgent. Volume 3 should not be updated and volume 4 should no longer try to cover the total field of flight test instrumentation but should be replaced by a series of monographs on subjects in instrumentation which were of special interest. The Flight Test Instrumentation Group was then established, and has since then published 18 volumes in the Flight Test Instrumentation Series. Volume 1 of the series gives a general introduction to the basic principles of flight test instrumentation, the other volumes are more detailed treatments of selected topics on flight test instrumentation.

In 1981, the Flight Mechanics Panel decided that the same working group should also supervise a new series of monographs in the field of Volumes 1 and 2 of the Flight Test Manual. The Working Group was therefore renamed Flight Test Techniques Group, and it now coordinates the publication of volumes in both the Flight Test Instrumentation Series (AGARDograph 160) and the Flight Test Techniques Series (AGARDograph 300). The Annex at the end of this volume lists the volumes that have been published in both series and the volumes that were in preparation at the time when the present volume was published.

Volume 1 of the Flight Test Instrumentation Series (published in 1974) has been used extensively as an introduction for instrumentation courses and symposia. In the middle 1980s it was realized that updating was necessary, and two editors were appointed to organize the updating process: R.W. Borek Sr. (NASA-USA) and A. Pool (NLR-Netherlands, retired). It is hoped that this second edition will be used with as much enthusiasm as the first edition.

Préface

Peu de temps après sa création en 1952, le Groupe Consultatif pour la Recherche et les Réalisations Aérospatiales (AGARD), a identifié le besoin d'une publication définitive sur les Techniques d'Essais en Vol et l'Instrumentation y afférente. Un manuel d'Essais en Vol a été publié entre les années 1954 et 1956 sous la direction du Panel AGARD des Essais en Vol (actuellement le Panel de la Mécanique du vol). Ce manuel est composé de quatre volumes à savoir: 1. Performances, 2. Stabilité et Contrôle, 3. Catalogue d'Instrumentation et 4. Systèmes d'Instrumentation.

Une décennie plus tard environ, un group d'étude a été créé avec pour mandat de formuler des propositions pour la mise à jour du Manuel. Suite aux recommandations de ce groupe, le Panel de la Mécanique du vol a décidé de donner la priorité à la mise à jour de la partie instrumentation de l'ouvrage. Il a décidé également de ne pas mettre à jour le volume 3 et de remplacer le volume 4, censé couvrir l'ensemble des techniques d'instrumentation pour les essais en vol, par une série de monographies sur des sujets présentant un grand intérêt dans le domaine de l'instrumentation. Le Groupe de Travail sur l'Instrumentation des Essais en Vol a été alors créé. A ce jour, il a publié 18 volumes dans la série. Le volume 1 donne une introduction générale aux principes de base de l'instrumentation des essais en vol, les autres volumes traitent en détail de thèmes sélectionnés dans ce domaine.

En 1981, le Panel de la Mécanique du Vol a décidé que ce même Groupe de Travail devrait également superviser l'édition d'une nouvelle série de monographies couvrant les domaines des volumes 1 et 2 du Manuel des essais en vol. Le groupe a donc été rebaptisé le Groupe de Travail sur les Techniques des Essais en Vol, et il est actuellement responsable de la coordination de la publication d'ouvrages dans les deux séries, à savoir la série de l'Instrumentation des Essais en Vol (AGARDographie 160) et celle des Techniques des Essais en Vol (AGARDographie 300). L'annexe du présent volume énumère les volumes qui ont été publiés dans les deux séries ainsi que les volumes qui étaient en cours de rédaction au moment de la parution du présent volume.

Le volume 1 de la série Instrumentation des Essais en Vol a été largement utilisé en tant qu'introduction dans les cours et symposia sur l'instrumentation. La nécessité de sa mise à jour a été constatée au milieu des années 1980 et deux rédacteurs ont été nommés à cette fin; Mr R.W. Borek Sr. (NASA, USA, retraité) et M.A. Pool (NLR, Pays-Bas, retraité). Il est espéré que cette deuxième édition sera utilisée avec le même enthousiasme que la précédente.

Foreword to the First Edition

Only a few decades ago the main source of flight test information was the subjective judgment of the test pilot. As the complexity of the aircraft increased and as more methods for detailed analysis during the design phase became available, the need arose for more objective information. This led to the use of increasingly complex data collection systems in the aircraft and to the use of large data processing centers in which the measured data are converted to a form in which they can be directly interpreted. The industry produces a large variety of transducers and electronic components which have been specially designed for flight test applications. Engineers specialized in instrumentation, electronics, and data processing play an important part in the design and the execution of the flight tests. The flight test engineers, who have the overall responsibility for conducting the flight tests, have to coordinate the work of all these specialists, who often have a theoretical and practical background quite different from their own.

The main purpose of the AGARD Flight Test Instrumentation Series is to provide monographs on the more important aspects of flight test instrumentation as a reference for the flight test engineer. The first monographs in the series discuss in-flight temperature measurements, fuel flow and engine rotation speed measurements, open and closed-loop accelerometers, and magnetic tape recording; they will be followed by others. In this introductory volume it has been attempted to highlight the main lines along which a flight test instrumentation system is developed, to indicate the main steps which must be taken during the design and to define the basic concepts used by each specialist. Although the volume is mainly directed towards the flight test engineer and tries to provide knowledge about the disciplines of the instrumentation engineer, it is hoped that the other specialists involved in flight testing will also find useful information in it.

In this book a flight test system is considered to include both the data collection and data processing systems. In order to obtain an optimal data flow, the overall design of these two subsystems must be carefully matched; the detail development and the operation can be done by separate groups of specialists. If a new data collection system has to be designed for use with an existing data processing system, the characteristics of the latter will have an important impact on the design of the former and it may well be necessary to modify the existing system if an optimal solution is to be obtained.

The main emphasis will be on the large automated instrumentation systems used for the initial flight testing of modern military and civil aircraft. This is done because there, many of the problems, which are discussed here, are more critical. It does not imply, however, that smaller systems with manual data processing are no longer used. In general, the systems should be designed to provide the required results at the lowest possible cost. For many tests which require only a few parameters, relatively simple systems are justified, especially if no complex equipment is available to the user. Although many of the aspects discussed in this volume apply to both small and large systems, aspects of the smaller systems are mentioned only when they are of special interest.

The volume has been divided into three main parts. Part 1 defines the main starting points for the design of a flight test instrumentation system, as seen from the points of view of the flight test engineer and the instrumentation engineer. In Part 2 the discussion is concentrated on those aspects which apply to each individual measuring channel and in Part 3 the main emphasis is on the integration of the individual data channels into one data collection system and on those aspects of the data processing which apply to the complete system. The contents of these three parts will be briefly summarized below.

Part 1. General considerations about the design of a flight test instrumentation system
In Chapter 1 a flight test engineer discusses the requirements of the system from the user's point of view. He mentions the different types of flight tests which occur and indicates the special requirements for each of these. In Chapter 2 an instrumentation engineer describes how the design of an instrumentation system should be organized and mentions the most important aspects which determine the basic design of the system.

Part 2. Design of a single measuring channel
Chapter 3 gives a short introduction into measurement theory and defines and describes such concepts as error, accuracy, dynamic response, etc. Chapter 4 reviews the characteristics of transducers, which generate the (electrical) signals from which the measurements are generally derived. The emphasis in this chapter is on the transducer output characteristics, which mainly determine the requirements for the circuits to which they will be connected. In Chapter 5 the main signal conditioning circuits are reviewed. These are the circuits which are used to adapt the transducer output signals to the input requirements of the recorder or telemetry transmitter. One important aspect of signal conditioning, the filtering required for the accurate reconstruction of a continuous signal from sampled data, is discussed separately in Chapter 6. Part 2 ends with a discussion of calibration in Chapter 7.

Part 3. Design of multi-channel instrumentation systems
Chapter 8 reviews the general design aspects of multi-channel data collection systems. Chapter 9 gives a short discussion of the different types of recorders and recording methods which are used in flight testing. Chapter 10 reviews the methods of telemetry. The special aspects of ground-based measurement equipment such as radar and kinetheodolites are mentioned in Chapter 11, together with the methods for synchronization of these measurement systems with on-board recorders. The final chapter is devoted to the general design aspects of data processing systems.

To conclude this foreword, something should be said about the way in which this book was compiled. The editors have been asked to prepare a comprehensive book covering the whole subject, not a collection of papers which would show many duplications and in which some subjects might have been treated too briefly or not at all. Though all authors co-operated with great enthusiasm, it was found that the fact that they were scattered over five countries prevented detailed deliberation about the details of the partition of the subjects over the different chapters. The editors therefore found it necessary to rearrange some of the chapters and to move sections from one chapter to another. The editors would like to express their deep gratitude to the authors both for the excellent work they did when writing their original draft chapters and for their friendly co-operation in the rearrangements necessary for the final book. The editors are also very thankful for all the advice and encouragement which they received from the members of the Flight Test Instrumentation Committee of the Flight Mechanics Panel of AGARD.

A. Pool
D. Bosman
Amsterdam, December 1973

Foreword to the Second Edition

Since the publication of this volume about 15 years ago, the AGARD Flight Test Instrumentation Series — to which this Volume 1 is the introduction — has grown to 18 volumes covering many important aspects in the field of flight test engineering (see the list of volumes at the end of this book). This introductory volume has been extensively and successfully used as an introduction to flight test for those just starting in this field and as a reference volume for courses and symposia. When it was decided that it should be updated, it was decided to retain as much as possible the qualities that were liked in the first edition. The new editors even considered restricting the updating to adding material on modern developments to the existing texts. It was found, however, that many of the fundamental trends have changed so much during the last 15 years that a complete rewrite was unavoidable. As for the first edition, the editors and the authors of the individual chapters have tried to avoid duplications and omissions, i.e., to produce an educational textbook.

The main division into three parts of this first edition has been retained:

1. *General considerations about the design of a flight test instrumentation system.* In the first edition this contained two chapters which showed the viewpoints of the flight test engineer and of the instrumentation engineer. Those chapters have been updated to show the views that are now held, and a new chapter has been added to this part which reviews the viewpoint of the computer engineer, who has become a very important contributor to the design of an instrumentation system.
2. *Design of a single measuring system.* The setup of this part is the same as in the first edition, but the individual chapters have been updated.
3. *Design of multi-channel instrumentation systems.* In the first edition of this part, data processing was discussed in the last chapter, almost as an afterthought to the design of the instrumentation system. That may have been reasonable in 1974; now the design of data processing is highly integrated with that of the instrumentation. In this edition the chapter on data processing follows, therefore, immediately behind that on the design of the instrumentation system.

With the exception of these changes, the general setup of the first edition of this book has been retained, although all chapters have been rewritten to reflect the new developments that have come into use since the first edition was written.

We, therefore, want to emphasise our indebtedness to the authors of the first edition:

- **B.L. Dove** (NASA Langley Research Center)
- **L.W. Gardenhire** (Radiation Inc.)
- **W.L. James** (Flight Dynamics and Control Laboratory)
- **H.L. Tollison** and **D.A. Tougas** (Boeing Co.) and
- **L.H. Weirather** (NASA Flight Research Center) from the United States of America,
- **M.L. Henney** (British Aircraft Corp.) from the United Kingdom,
- **J. Idrac** and **J. Perrochon** (Centre d'Essais en Vol) and
- **C. Roquefeuil** (SFIM) from France,
- **Dr A. Becker** and **Dr O. Weber** (DFVLR) from Germany,
- **J.T.M. van Doorn** and **R.L. van der Velde** (NLF) and the editors **Prof. D. Bosman** (Technical University Enschede) and **A. Pool** (NLR) from the Netherlands.

It will be noted that two authors (B.L. Dove and Dr A. Becker) and one editor (A. Pool) have taken part in the preparation of both editions, 15 years apart.

The editors also thank the members of the AGARD Fight Test Techniques Group who supervised the preparation of this volume and contributed many valuable suggestions — their names are mentioned in the Acknowledgement to this volume.

A. Pool
R.W. Borek
Lancaster/Amsterdam, December 1992

Acknowledgement to Flight Test Techniques Group Members

Besides the two Editors, the members of the Flight Test Techniques Group listed below have taken an active part in the preparation of the present volume:

En plus des deux rédacteurs, le membres suivants du Groupe de travail sur les techniques des essais en vol ont participé activement à l'élaboration du present volume:

Adolph, C.E.	OSD/USA
Appleford, J.K.	A&A/AEE/UK
Bever, G.	NASA/USA
Bogue, R.K.	NASA/USA
Boischot, M.	CEV/France
Bothe, H.	DLR/Germany
Campos, L.M.B.	IST/Portugal
Delle Chiaie, S.	DASRS/Italy
Langdon, G.	A&AEE/UK
Nippress, K.	A&AEE/UK
Payze, T.	MSB/Turkey
Pool, A. (Consultant)	NLR/Netherlands
Russell, R.A.	NATC/USA
Tresset, J.	CEV/France
van der Velde, R.L.	NLR/Netherlands

R.R. Hildebrand, AFFTC/USA
Member, Flight Mechanics Panel
Chairman, Flight Test Techniques Group

Contents

	Page
Preface	iii
Préface	iv
Foreword to the First Edition	v
Foreword to the Second Edition	vii
Acknowledgement to Flight Test Techniques Group Members	viii
Text Symbols and Abbreviations	xvi

PART I – GENERAL CONSIDERATIONS ABOUT THE DESIGN OF A FLIGHT TEST INSTRUMENTATION SYSTEM

1.0	**Planning of a Flight Test Programme**		1-1
	by C.E. Adolph		
	1.1	**Introduction**	1-1
	1.2	**Test Planning**	1-2
		1.2.1 The Master Test Plan	1-2
		1.2.2 Detailed Test Plans	1-2
	1.3	**Planning the Basic Design of the Flight Test System**	1-3
		1.3.1 General	1-3
		1.3.2 The Method of Data Transmission	1-3
		1.3.3 Real-time Processing	1-4
		1.3.4 Tasks of the Ground Computers besides Direct Data Processing	1-4
		1.3.5 Onboard Instrumentation Systems	1-5
		1.3.6 Processing Techniques	1-5
	1.4	**References**	1-6
	1.5	**Bibliography**	1-6
2.0	**Principles of Instrumentation System Design**		2-1
	by V.H. Knight and B.L. Dove		
	2.1	**Introduction**	2-1
	2.2	**Factors Influencing Instrumentation System Design**	2-2
		2.2.1 Introductory Remarks	2-2
		2.2.2 The Measurements List	2-2
		2.2.3 The Overall Design of the Instrumentation System	2-4
		2.2.4 Other Factors	2-7
	2.3	**Conclusion**	2-10
	2.4	**Bibliography**	2-10
3.0	**Introduction to the Design of Computer Systems and Related Software**		3-1
	by E.M. Hamlin and A. Lejeune		
	3.1	**The Need for Computer Systems in Flight Testing**	3-1
	3.2	**An Organized Approach to Software System Design**	3-1
		3.2.1 The Evolution of Systematic Software Design	3-1
		3.2.2 Structured, Modular Programming Techniques	3-2
		3.2.3 The Importance of Teamwork and Communication	3-2

Page

3.3 The Design of Software Systems 3-2
3.3.1 The Elements of a Data Processing System 3-3
3.3.2 Design Personnel 3-3
3.3.3 Preliminary Design Phase 3-3
3.3.4 Functional Design Phase 3-4
3.3.5 Coding of Software Modules 3-4
3.3.6 Software Module Testing 3-5
3.3.7 Module Integration 3-5
3.3.8 Full System Implementation 3-5
3.3.9 Validation and Verification Testing 3-5
3.4 Production Phase 3-6
3.4.1 Configuration Control 3-6
3.4.2 Documentation 3-6
3.5 Conclusion 3-6
3.6 References 3-7
3.7 Bibliography 3-7

PART II – DESIGN OF A SINGLE MEASURING CHANNEL

4.0 The Metrological Characteristics of a Measuring Channel 4-1
by Dr M.E. Eshelby
4.1 Introduction 4-1
4.2 The Measuring Channel 4-2
4.2.1 The Airborne System 4-2
4.2.2 The Ground Station 4-4
4.3 Errors in Measurements and Measurement Accuracy 4-5
4.4 Characteristics of Metrology 4-6
4.4.1 Static Characteristics 4-7
4.4.2 Dynamic Characteristics 4-10
4.4.3 System Characteristics 4-14
4.5 Bibliography 4-15

5.0 Transducers 5-1
by R. Gregory
5.1 Introduction 5-1
5.1.1 Transducer Elements 5-1
5.1.2 Transducer Specifications 5-1
5.1.3 Parameters-definition and Calibration 5-2
5.2 Transducer Characteristics 5-2
5.2.1 Input Characteristics 5-2
5.2.2 Transfer Characteristics 5-3
5.2.3 Output Characteristics 5-4
5.3 Transfer Errors and Accuracy 5-5
5.3.1 Errors Due to Temperature Change 5-6
5.3.2 Errors Due to Shock and Vibration 5-6
5.3.3 Bandwidth and the Use of Filters 5-6
5.3.4 Errors from EMI 5-7
5.3.5 Other Error Sources 5-7
5.4 Electrical Characteristics 5-7
5.4.1 Data Levels, Impedance, and Matching 5-7
5.4.2 Bandwidth and Phase Relationships 5-8
5.4.3 Ground Connection 5-8
5.4.4 Output Data Formats 5-8

		Page
5.5	**Transducer Construction**	**5-10**
5.5.1	Integrated Transducers	**5-10**
5.5.2	Integrated Package Devices	**5-10**
5.5.3	Micro-techniques	**5-10**
5.5.4	Integrated Circuit Techniques	**5-10**
5.5.5	Digital Transducers	**5-11**
5.5.6	The Micro-processor and Bus Control	**5-11**
5.5.7	Closed-looped Transducers	**5-11**
5.6	**Optical Methods**	**5-13**
5.6.1	Optical Sensors	**5-13**
5.6.2	Fibre Optics, Sensors, and Data Transmission	**5-13**
5.6.3	Laser Methods	**5-13**
5.6.4	Ring Laser Gyro (RLG)	**5-13**
5.6.5	Optical Gratings and Scales	**5.14**
5.6.6	Encoders	**5-14**
5.7	**Transducer Applications**	**5-15**
5.7.1	Mathematical Relationships	**5-15**
5.7.2	Electrical Principles Available	**5-15**
5.8	**Displacement Measurement**	**5-16**
5.8.1	Direct and Inertial Measurement	**5-17**
5.8.2	Potentiometers	**5-17**
5.8.3	Inductive Displacement Transducers	**5-18**
5.8.4	Synchros	**5-19**
5.8.5	Capacitive Displacement Transducers	**5-21**
5.8.6	The Piezo-electric Principle	**5-22**
5.8.7	Strain Gauges (Metallic)	**5-23**
5.8.8	Encoders	**5-24**
5.9	**Velocity and Flow Measurement**	**5.24**
5.9.1	Pitot/static Systems	**5-25**
5.9.2	Tachometers	**5.25**
5.9.3	Measurement of Flow	**5-25**
5.9.4	Anemometers	**5-27**
5.9.5	Flowmeter Performance	**5-27**
5.10	**Acceleration Measurement**	**5-27**
5.10.1	Practical Accelerometers	**5-27**
5.10.2	Force Balance Techniques (Servo Feedback Transducers)	**5-29**
5.10.3	Frequency Response versus Range and Damping	**5-29**
5.10.4	Vibration Measurement	**5-29**
5.11	**Gyros**	**5-29**
5.11.1	Free Gyros	**5-30**
5.11.2	Rate Gyros	**5-30**
5.11.3	Laser Gyro	**5-31**
5.11.4	Gyro Characteristics	**5-31**
5.12	**Pressure**	**5-31**
5.12.1	Capsules and Bellows (Altimeters and ASIs)	**5-32**
5.12.2	Diaphragms	**5-32**
5.12.3	Bourdon Tube	**5-33**
5.12.4	Performance and Damping	**5-33**
5.13	**Temperature Measurement**	**5-34**
5.13.1	Resistance Bulbs and RTDs	**5-34**
5.13.2	Thermistors	**5-34**
5.13.3	Thermocouples	**5-34**
5.13.4	Optical Methods	**5-35**
5.14	**Bibliography**	**5-36**
Appendix		**5-38**
Table I — Typical Transducers used for Flight Test Instrumentation		

		Page
6.0	**Signal Conditioning**	**6-1**
	by R.K. Bogue	
6.1	**Introduction**	**6-1**
6.1.1	Signal Conditioning Definition	**6-1**
6.1.2	Signal Conditioning Purpose	**6-1**
6.1.3	Principles of Signal Conditioning	**6-2**
6.1.4	Signal Conditioning Categories	**6-4**
6.2	**Linear Operations**	**6-4**
6.2.1	Amplification and Attenuation	**6-4**
6.2.2	Filtering (Signal Enhancing)	**6-5**
6.2.3	Zero Shifting	**6-7**
6.2.4	Compensation	**6-7**
6.3	**Signal Conversion**	**6-7**
6.3.1	Modulation	**6-7**
6.3.2	Demodulation	**6-9**
6.3.3	Commutation and Sampling	**6-9**
6.3.4	Analog-to-digital Conversion	**6-9**
6.3.5	Digital Processes	**6-15**
6.4	**Concluding Remarks**	**6-18**
6.5	**References**	**6-18**
7.0	**Time Sampled Data and Aliasing Errors**	**7-1**
	by D.W. Veatch	
7.1	**Introduction**	**7-1**
7.2	**Definition of Aliasing**	**7-1**
7.3	**Origins of Aliasing**	**7-1**
7.3.1	Reduction of Aliasing Errors through System Design	**7-2**
7.3.2	Sampling Rate and Filters used as Anti-aliasing Tools	**7-2**
7.4	**Understanding Aliasing Errors**	**7-2**
7.5	**Sampling Rates and Aliasing**	**7-8**
7.6	**Filters and the Errors they Introduce**	**7-9**
7.7	**Reconstruction Filters**	**7-14**
7.8	**Digital Filters**	**7-16**
7.8.1	Infinite Impulse Response Digital Filters	**7-17**
7.8.2	Finite Impulse Response Digital Filters	**7-17**
7.8.3	Ground Stations and Digital Filters	**7-17**
7.9	**Anti-Aliasing Techniques**	**7-19**
7.9.1	Case 1: The Good Data Channel	**7-19**
7.9.2	Case 2: The Good Data Channel with a Remote Noise Spike	**7-20**
7.9.3	Case 3: White Noise Data	**7-21**
7.9.4	Case 4: Resolution of a Transient Event	**7-22**
7.9.5	Case 5: Ground Station Techniques	**7-23**
7.9.6	Combined Cases	**7-23**
7.10	**Conclusions**	**7-23**
7.11	**References**	**7-24**
8.0	**Calibration**	**8-1**
	by D.R. Crounse	
8.1	**Introduction**	**8-1**
8.2	**Basic Measuring Concept**	**8-1**
8.3	**The Real World Concept**	**8-1**
8.4	**The Measurement System**	**8-2**
8.5	**Data Use**	**8-3**
8.5.1	Accommodation	**8-4**
8.6	**Traceability**	**8-4**
8.7	**Unit Definition**	**8-4**
8.8	**Standard Induced Errors**	**8-5**

Page

8.9 Calibration Procedures 8-5
8.9.1 Characteristics 8-5
8.9.2 Calibration Data Presentation Techniques 8-6
8.9.3 Visual Instrument Calibration 8-6
8.9.4 On-vehicle Calibration 8-7
8.9.5 Environmental Calibration 8-7
8.10 System vs. Component Calibration 8-7
8.10.1 Individual Component Calibration 8-7
8.10.2 System Calibration 8-8
8.10.3 Combination Component/System Calibration 8-8
8.11 Automated Calibration 8-8
8.12 Pre/Post/In-Flight Calibration 8-8
8.13 Planning 8-9
8.14 References 8-9
Appendix 8-10

PART III – DESIGN OF A MULTI-CHANNEL INSTRUMENTATION SYSTEM

9.0 Technical Aspects in the Design of Multi-channel Data Collection Systems 9-1
by H. Bothe and R. Crabié
9.1 Introduction 9-1
9.2 System Concept 9-2
9.2.1 System Modification versus New Development 9-2
9.2.2 Choice of the Major Components 9-2
9.2.3 Onboard Recording and/or Telemetry 9-4
9.2.4 Methods of Onboard Recording and Telemetry 9-5
9.3 Technical Design and Development Considerations 9-6
9.3.1 Introduction 9-6
9.3.2 Multiplexing and Normalization of Input Signals 9-7
9.3.3 Maintenance and Performance Monitoring of the Data Collection System 9-13
9.3.4 System Integration 9-14
9.3.5 Grounding 9-16
9.3.6 Electrical Power 9-17
9.3.7 Data Analysis Requirements of the Instrumentation Engineer 9-17
9.4 The Testing of Instrumentation Systems 9-18
9.4.1 Environmental Testing 9-18
9.4.2 Functional Testing 9-19
9.4.3 Total System Check-out in the Aircraft 9-19
9.4.4 Preflight and Postflight Checks 9-20
9.5 References 9-21

10.0 Data Processing (Part A) 10A-1
by R. Pozmantier
10.1 Introduction 10A-1
10.2 General 10A-1
10.2.1 Types of Data Input 10A-1
10.2.2 Functional Analysis of Data Processing 10A-3
10.2.3 Quick-look and Instrumentation Checking 10A-3
10.2.4 Preprocessing 10A-4
10.2.5 Data Compression 10A-5
10.2.6 Post Processing 10A-6
10.2.7 Presentation 10A-7
10.2.8 Validation and Interpretation 10A-7
10.2.9 Short Description of a Few Processing Techniques 10A-8

Page

10.3 Processing Hardware Configuration 10A-11
10.3.1 Computer Types 10A-11
10.3.2 Equipment for Quick-look and Instrumentation Checking 10A-12
10.3.3 Preprocessing Equipment for Magnetic Tape Inputs 10A-13
10.3.4 Equipment for Analyzing Photo-panel Recordings and Continuous Trace Recordings 10A-14
10.4 Software Specifications and Development 10A-14
10.5 Data Files and Archiving 10A-15
10.6 Concluding Remarks 10A-15
10.7 References 10A-16

10.0 Data Processing (Part B) 10B-1
by S. Yount
10.8 Operational Support Database 10B-1
10.8.1 Introduction 10B-1
10.8.2 General 10B-1
10.8.3 System Objectives 10B-2
10.8.4 Calibration Information 10B-2
10.8.5 Parametric Information 10B-3
10.8.6 Data Acquisition System Information 10B-3
10.8.7 Lineup Information 10B-3
10.8.8 History Information 10B-3
10.8.9 System Considerations 10B-4
10.8.10 Design Alternatives 10B-8
10.8.11 Utilization Philosophy 10B-11
Appendix 10B-13
10.9 References 10B-18

11.0 Onboard Data Recording Systems 11-1
by L.A. Whalley, C.J. Brain and R. Grant
11.1 Introduction 11-1
11.2 Criteria for the Selection of the Recording System 11-1
11.3 The Major Types of Recording Systems 11-1
11.3.1 The Photo Panel 11-2
11.3.2 The Film Camera, Pulsed and Ciné 11-3
11.3.3 Trace Recorders 11-3
11.3.4 Evolution of Magnetic Recording 11-5
11.3.5 Instrumentation Recording 11-6
11.3.6 Video Recording 11-13
11.3.7 The Magneto-optical Recording Systems 11-17
11.3.8 The Solid-state Memory 11-19
11.4 Conclusions 11-20
11.5 References 11-20
11.6 Bibliography 11-21

12.0 Telemetry 12-1
by A. Becker
12.1 Introduction 12-1
12.2 Basic Methods 12-2
12.2.1 Modulation 12-2
12.2.2 Multiplexing 12-6
12.2.3 The Radio Frequency Link 12-9
12.2.4 Ground Data Processing, Recording and Display 12-13
12.2.5 Encryption of Data Information 12-14

		Page
12.3	**IRIG-Standardized Telemetry Systems**	**12-15**
12.3.1	FM/FM Systems	**12-15**
12.3.2	PAM/FM Systems	**12-16**
12.3.3	PCM/FM Systems	**12-16**
12.3.4	Hybrid Systems	**12-21**
12.4	**An Approved Uplink-Downlink Telemetry System**	**12-22**
12.5	**References**	**12-26**
12.6	**Bibliography**	**12-26**
13.0	**Measuring of Flightpath Trajectories**	**13-1**
	by K. Hurrass	
13.1	**Introduction**	**13-1**
13.2	**Coordinate Systems**	**13-1**
13.3	**Mathematical Methods**	**13-3**
13.3.1	Determination of Positions in *x/y/z* Coordinates	**13-3**
13.3.2	Method of Least Squares Adjustment	**13-5**
13.3.3	Kalman Filtering	**13-7**
13.3.4	Influence of Atmospheric Refraction	**13-9**
13.4	**Instruments and Methods**	**13-11**
13.4.1	Cinetheodolites	**13-11**
13.4.2	Tracking Radar	**13-13**
13.4.3	Laser Tracker	**13-14**
13.4.4	Radio Electric Ranging Systems	**13-15**
13.4.5	Laser Ranging	**13-16**
13.4.6	Video Tracking Systems	**13-17**
13.4.7	Inertial Navigation Systems	**13-17**
13.4.8	GPS	**13-18**
13.4.9	Integrated Systems	**13-20**
13.5	**Conclusion**	**13-24**
13.6	**References**	**13-25**
13.7	**Bibliography**	**13-25**
ANNEX		**A**

Text Symbols and Abbreviations

(Does not include Symbols used in Mathematical Derivations)

A	amplitude
A-D, A/D, a-to-d	analog to digital
AFES	avionics flight evaluation system
AGARD	Advisory Group for Aerospace Research and Development
AGARDograph	a paper or book sponsored by AGARD
AM	amplitude modulation
ARINC	Aeronautical Research, Inc.
ASI	air speed indicator
AV	anti-vibration
ac	ac current
B	binary code
BFSL	best fit straight line
BITE	built in test equipment
BR	bit rate/s
bar	unit of pressure
C	capacitance/conversion process/correction-to-add, correction from the calibration
C/A	course/acquisition
CAD/CAE	computer aided design/computer aided engineering
CB	constant bandwidth
CBW	constant bandwidth
CCD	configuration control board
CDX	differential control xmitter
CRT	cathode ray tube (workstation display)
CT	control transformer
CX	control xmitter
c.g.	center of gravity
cm	centimeter
D	diaphragm damping
D/A, d-to-a	digital to analog
DAS	data acquisition system
DAT	digital audio tape
DBMS	data base management system
DLR	Deutsche Forschungsanstalt für Luft- und Raumfahrt e.V. (German Aerospace Research Establishment)
DME	distance measuring equipment
DSB	double sideband
d	gas viscosity
dB	decibel
dc	dc current
EEO	electro-explosive device
EEPROM	electrically erasable PROM
EM	electro magnetic
EMI	electromagnetic interference
EPROM	electrically programmable read only memory
EU	engineering units
E_{max}	maximum phase error in the filter's pass band
F	diaphragm stiffness (force)
FFT	fast Fourier transform
FIR	finite impulse response
FM	frequency modulation
FS	full scale
FSK	frequency shift keying
FSM	frequency shift modulation
FSR	full scale range

f_N	Nyquist frequency
f_R	reconstructed frequency
f	frequency, Hz
f_c	cut-off frequency
f_m	maximum frequency of interest
fn	natural frequency
fps	frames per second
f_s	sampling rate, frequency
f_0	zero frequency
G	gray code
GDOP	geometric dilution of precision
GF	gauge factor
GMT	Greenwich mean time
GPS	global positioning system
g	force of gravity, 32 ft/sec/sec
gal	gallon/s
HDDR	high density digital recorder
Hz	hertz, cycles per second
I	input, indicated reading
IC	integrated circuit
IFF	identification friend or foe
IFR	instrument flight regulations
IIR	infinite impulse response
IN	inertial navigation
INS	inertial navigation system
I/O	input/output
IRIG	Inter Range Instrument Group
IRIG-B	timing format, IRIG-B
JPT	jet pipe temperature
Kg	kilogram
KHz	kilohertz
LED	light emitting diode
LRG	laser ring gyro
LSI	large scale integration
LVDT	linear variable differential transformer
lb	pound, avoirdupois
M	megohm (one million ohms)
MAPS	microwave airplane position system
MSB	most significant bit
MUDAS	modular universal data acquisition system
MUX	multiplexer
MW	mega watts
m	gas mass
mA	milliampere
mph	miles per hour
mV	millivolts
N	control force, Newtons
NACA	National Advisory Committee for Aeronautics
NRZ	non-return to zero
NRZL	non-return to zero level
NTC	negative temperature coefficient
NTSC	national television system committee
nm	nanometers
O	output
OBDS	onboard data system
OP amp	operational amplifier
OPSDB	operational support data base
OS	operating system

PAL	phase alternation line
PAM	pulse amplitude modulation
PB	proportional bandwidth
PBW	proportional band width
PCM	pulse code modulation
PDM	pulse duration modulation
PLL	phase locked loop
PM	phase modulation
PO	pick-off
PPM	pulse position (or phase) modulation
PRN	pseudo random noise
PTC	positive temperature coefficient
PWM	pulse width modulation
ppm	parts per million
R	resistance capacitance
RAM	random access memory
RC	resistance
R-DAT	rotary (head)-DAT
RF	radio frequency
RLG	ring laser gyro
RPM	revolutions per minute
RTD	resistance temperature detector
RX/RC	resolver xmitter/control
RZ	return to zero
rms	root mean square
S	sensitivity
SAR	successive approximation register
SECAM	sequential color and memory
SNR	signal to noise ratio
SRAM	static random access memory
SSB	single side band
T	true value
TCP/IP	telecommunications protocol/Internet protocol
TSM	time sharing modulation
TX/TR	transmit/receive
t	time
UTM	universal transverse mecator
V	volts
V & V	validation and verification
VHS	video home system
VOR	vhf omni ranging
VLSI	very large scale integration
VTR	video tape recorder
V_c	voltage on capacitor "c"
V_{in}	voltage input
V_{out}	voltage output
V_r	voltage reference
V_x	voltage input
W	watts
WBFM	wide band frequency modulation
Xmitter	transmitter
ϕ	phase shift, degrees
~	power source

Chapter 1

PLANNING A FLIGHT TEST PROGRAMME

by

Charles E. Adolph
Deputy Under Secretary of Defense (Acquisition)
Research and Engineering (Test and Evaluation)
The Pentagon,Washington DC 20301-3110
United States

1.1 INTRODUCTION

In order to place in context the function of test instrumentation in the development of aircraft, this first chapter will review the test planning required for a new or modified aircraft type. Speaking very broadly, the development of an aircraft type—i.e., the phase before the aircraft is accepted for production by military or civil authorities—can be divided into two stages: a design stage (including the production of one or more prototype aircraft) and a test phase. During the design phase, estimates of the aircraft characteristics must be based on previous experience with similar aircraft, on wind tunnel tests of reduced-scale models, and on theoretical calculations. These design aids are quite sophisticated and are becoming very realistic. In wind tunnels the range of achievable Reynolds and Mach numbers increases, the effects of all kinds of errors become better known so that corrections can be applied.

The increased capacity and speed of digital computers has tremendously stimulated the development of powerful calculation methods in the fields of stress analysis and aerodynamics. These improved design aids significantly reduce the probability of large design errors. Nevertheless, the test phase is still essential to prove that the aircraft meets its design goals and to verify its performance.

Test programmes are not only essential for the development of new aircraft, they also satisfy a variety of objectives of military services, other government agencies, manufacturers of engines and aircraft equipment, and commercial airlines. The test results provide information:

- To provide product designers with feedback they need to evaluate the design's validity or to provide the basis for design alterations.
- To evaluate whether or not the product is being built in accordance with the design specification. This is of importance for the organization acquiring the equipment.
- To provide insight into how well the system will work once fielded. Tests of military aircraft must determine whether or not the system will be operationally effective and suitable for use in combat by typical military forces.

The planning of the test phase is slightly different for civil and military aircraft. The testing of civil aircraft was originally regulated in detail in each country separately, whereby the FAR (Ref.1.1) gradually became the main example for other countries. During the last decades the European countries have developed their own joint regulations (Ref.1.2) which have been set up along lines very similar to FAR, though there are several important differences. A civil aircraft that has been shown to meet these requirements receives a Type Certification. For military aircraft the requirements, and therefore the test programme, are more specifically determined by the use that is to be made of the aircraft.

A few decades ago the test phase consisted almost exclusively of flight testing, which is the most direct way to measure the performance of an aircraft. It has been found, however, that many of the tests which are essential in the development of modern aircraft and equipment would require a tremendous amount of flight test time and, in some cases, would be far too risky. Such tests are now generally executed as ground tests, though the results must, in the end, be verified by a (reduced) flight test programme. The oldest ground test is probably the structural test, where the structure of the aircraft is tested under simulated static loading—often until actual failure occurs. Later came the dynamic ground testing of the fatigue characteristics of the wing-fuselage structure and of other parts of the aircraft, such as the undercarriage. In recent years the tendency towards integration of all kinds of (electronic) systems in the aircraft has started a new trend in ground testing. Testing digital hardware and software for integrated systems must cover, in principle, all conditions that can occur during flight

(including combinations of extreme attitude angles with electrical interference from radio, radar and munitions release, and all kinds of flight directions and environmental extremes). "Integrated Test Facilities" are being built in many places for ground testing of such hardware and software. These ground tests do not replace the flight tests; the flight tests provide the final proof and they must show that the results of these ground tests are sufficiently realistic. In the ground test facilities (see e.g., Ref.1.3), computers with detailed mathematical models of the aircraft and its components can be tested together with actual components of the aircraft and even the complete aircraft itself, so that internal wiring and electro-magnetic interference are realistically represented. These integrated test facilities are an increasingly important aspect in the planning of flight tests.

1.2 TEST PLANNING

Test planning documentation falls within the broad categories of a master test plan and detailed test plans. The master test plan contains test management concepts and discusses the objectives of the tests that are to be executed, test locations and resources, and overall support requirements. Master test plans should contain enough information on specific test particulars to allow test engineers to develop detailed test plans and instrumentation measurement lists.

1.2.1 The master test plan

There should be an overall test and evaluation plan for any development test program. This plan should identify:

- The critical technical and operational characteristics to be evaluated during the tests and quantitative values for success criteria.
- The division between ground tests and flight tests, and the specification of the flight tests required to verify the results of ground tests.
- Whether real-time data analysis will be used and, if so, whether this will be done on the ground using a telemetry link between the aircraft and the ground processing station or using onboard computers. This subject will be discussed in some more detail in Section 1.3.3.
- The analysis techniques that will be used in processing the test data. Modern computer-based design techniques make extensive use of computer models. An important part of the flight testing will consist of verification of those computer models. The modern analysis techniques available for this verification (parameter identification techniques) often require very specific flight tests to provide optimal results.
- The number of aircraft to be used and the definition of the parts of the test program each of these aircraft is to execute.
- All key test resources that are to be used during the course of the test program and basic specifications for those that must still be purchased.
- General requirements for the instrumentation systems (see below Section 1.3.5) and for the installation of the flight test instrumentation in the prototype aircraft. These latter are concerned with the integration of the normal operational wiring with the wiring required for the special flight test instrumentation and with safety aspects in case the test instrumentation system must be connected to operational systems in the aircraft.

This Master Plan must be finalized at a very early stage in the design of the aircraft. It will be the basis for purchasing the components for the ground simulators and the onboard measuring equipment, and for defining the wiring and other provisions for the instrumentation system that must be incorporated in the prototype aircraft. It should be kept in mind that the same ground simulation computers can, in many cases, be used for simulations during both the design stage and the test stage.

A few of the most important aspects that must be considered in the master plan are discussed in more detail in Section 1.3 of this chapter. General information about test planning is given in Ref.1.4, general information about ground testing is given in Ref.1.5.

1.2.2 Detailed test plans

On the basis of the Master Plan all those who require information from the test programme should provide test management with descriptions of the tests they want to have executed. Such descriptions will be supplied, for instance, by the authorities who must certify the aircraft, by future users who want verification of the performance claims of the manufacturer and information that may be essential for the future operation of the aircraft,

or by design engineers who want to verify theoretical or wind-tunnel results. The descriptions must indicate the principles of the test procedures, the number of tests, and the limitations and constraints which are essential to obtain usable results.

The test management must then integrate the requirements from different users, decide which tests must be done by flight tests and which by ground tests, and establish a time sequence for the complete test programme. This information is then handed to groups of more specialised engineers for further development:

- Flight test engineers must work out the details of the flight procedures and write step-by-step instructions for the flight crews. They also specify what measurement parameters will be required for each specific test and what are the requirements regarding measuring range, accuracy, sampling rate, etc. They will also set up the sequence in which the tests are to be executed. A detailed description of these activities falls within the scope of this AGARDograph.
- Instrumentation engineers must work out the details of the instrumentation system that will be required to execute these measurements and must select the individual parts that must be purchased and define the software that must be developed. The principles of these activities are discussed in some more detail in Chapter 2 of this AGARDograph.
- Computer engineers must work out the details of the computer systems that will be required. This applies in the first place to planning for the hardware and software of the main ground processing system, but can also include onboard computers and microprocessors, and computer systems for auxiliary ground equipment. This is a relatively new activity which was not discussed in detail in the first edition of this AGARDograph. For that reason a new Chapter 3 has been included which discusses the primary requirements for the design of an instrumentation system from the point of view of the computer engineers.

The brief review of the planning process given above may seem to indicate that the several stages of the master plan and the detailed plans follow each other in a continuous sequence. In reality this is never the case. During the whole design process there is continuous consultation between the test managers and all participating specialists, so that new requirements that come up can be accommodated and the effect of new ideas in one specialty can be considered in the light of the total project. Even while the flight tests are actually being executed, problems may come up which require new parameters, new software, new sampling rates, etc. A good relationship between the test managers and the many groups of specialists involved in the design and maintenance of a flight test system is one of the critical aspects which determine the success of the programme.

1.3 PLANNING THE BASIC DESIGN OF THE FLIGHT TEST SYSTEM

1.3.1 General

The foregoing pages give a very broad introduction to flight test (and ground test) planning. It seems useful to conclude this introductory chapter by briefly discussing a few of the more critical decisions that must be made at the very beginning of the test planning process. Questions of special concern are:

- the method of data transmission
- use of real-time data processing
- tasks of the ground computer besides direct data processing
- the onboard instrumentation system: can an existing system be used (if necessary after modification) or is a new design required, and must modern developments like standard data busses, local commutation, and fibre optics be incorporated?
- will use be made of model-oriented data processing techniques?

1.3.2 The method of data transmission

During the last few decades digital data transmission and processing have become the standard methods for acquiring quantitative data in flight testing. Completely analog methods are only used on rare occasions for extremely small ad-hoc measuring systems. In many modern systems analog transmission is used for a few parameters which have to be sampled at frequencies much higher than those of the other parameters, which are transmitted in digital format. Modern developments in helical and transverse scan recording allow the recording of extremely high quantities of data on a given length of tape.

Until recently the transmission of pictures was done on film, which usually had to be developed after the aircraft had landed. The fast development of video recording, first analog and recently also digital, has resulted in a rapid increase in the use of those methods. Photo recording is now, in general, only used when a picture frequency is required which is higher than the 50 pictures/sec which standard video systems can attain.

For further information see Chapters 9 and 11.

1.3.3 Real-time processing

Real-time data processing using telemetry has been used during the last few decades, especially for dangerous tests such as a flutter boundary survey. At first only a limited number of critical parameters were telemetered during the dangerous flights only, so that the specialists on the ground could warn the (minimal) crew in the aircraft when a dangerous boundary was approached (see Ref.1.6). In addition to enhancing the safety of the test process for hazardous flights, telemetry now also provides the opportunity to improve the efficiency of the test process. Modern telemetry and computer technology allow the transmission of hundreds of parameters and their processing in real time into data from which the adequacy of a test manoeuvre can be determined by a specialist behind a monitor screen in a mission control room. These improvements are brought about by real-time, answer-oriented software which allows an immediate assessment of significant test results. In many cases the ground specialist can directly give the go-ahead for the next test condition, which formerly could only be given after the aircraft had landed and the data from its recorders had been processed off line. An additional benefit is that detailed results are available during the post-flight debriefing when all events are still fresh in the minds of the flight crew and the engineers. A discussion of modern, telemetry-based systems is given in Ref.1.7. A problem with telemetry is that the flight must be made in the immediate vicinity of a telemetry receiver. A few major test centres have a number of interconnected receivers, which cover a large area and send their information to a single ground computer centre. Another method to expand area coverage is to use a relay aircraft which flies at a sufficient height to both receive data from the test aircraft and to relay them to the ground station.

Real-time processing is also possible using an onboard computer. The Specialist analyst must then fly in the aircraft, so that this is only possible when sufficient space is available. Several stages in the development of such a system are described in Ref.1.8.

The decision on the use of real-time data processing has a large effect on the planning of a flight test programme, its cost, and time schedule. This decision must, therefore, be made at a high management level and at a very early planning stage.

1.3.4 Tasks of the ground computers besides direct data processing

The large ground computer systems that are nowadays available to flight test programmes can be used with great advantage for administrative functions connected with the flight testing and for the storage of all kinds of ancillary data, such as:

- the flight test programme itself, with detailed instructions for the execution of the test and a listing of special instrumentation requirements, etc.
- the list of available transducers and other kinds of instrumentation equipment, with the present status of that transducer or equipment and the period(s) during which it was actually used in one of the aircraft taking part in the programme
- the calibrations of each transducer or other type of instrumentation equipment, with the periods during which each calibration was valid
- archives of data from all previous tests with the same aircraft
- a library of all programmes that can be used for the processing of the data and for the presentation of the results in different ways.

With such an integrated ground system all kinds of processes can be automated. For example, the data processing programme itself can find for each instrumentation item which calibration was valid at a certain date—this eliminates manual work that is liable to errors. Also, engineers at their computer terminals can find all information they need for checking data and results, and for interpreting the results. The programming of such a

complex ground system must be done with great care, as software errors can have severe consequences. More information is given in Chapters 3 and 10.

1.3.5 Onboard instrumentation systems

One decision which must be made at a very early date, and with an important input from management, is whether an existing instrumentation system can be adapted for the new test programme or whether a new instrumentation system must be designed. In the latter case it must be decided whether the new instrumentation system must meet only the needs of this one specific project or will be designed for future projects as well. There are advantages and disadvantages to each approach. Project unique systems are, from inception, tailored to that project's needs. These instrumentation systems are usually developed concurrently with the system they must test, and overall project schedule delays can occur if problems come up during the development of the instrumentation. Their reutilization potential usually is limited and most of the instrumentation must be written off on the one project. On the other hand, such a system can be designed to the specific needs and the available space for this one project, which can be an important advantage.

There have been numerous attempts to develop standard instrumentation equipment that meets a wide variety of test requirements. Most programmes need measurements of temperature, pressure, flow, voltage, strain, acoustics, vibration, and time. The experience with such general purpose systems has been that the instrumentation technology improves so fast that after a period of about ten years the equipment was too heavy, too slow, and did not have sufficient capacity. Nevertheless, most such systems are designed as modular systems, so that during the time they meet the technology requirements they can be adapted to a number of flight test programmes. The use of standardized modulation systems (IRIG standards, Ref.1.9) and of data bus formats developed for use in the operational equipment of the aircraft (MIL-STD-1553 B and ARINC 429, Refs. 1.10 and 1.11) help to make the system more generally usable.

There are a number of trends at present which make it possible to improve the reusability of the instrumentation. These must be considered at an early stage by management, in consultation with all specialists involved:

- Local digitizers and commutators—which only handle the data that are produced in the direct neighbourhood of this local device which then send its (digital) data over one wire pair to a master commutator for final data formatting—can very much reduce the overall weight of the test wiring and increase system flexibility. See Ref.1.12.

- Fibre optics data transmission in the aircraft potentially provide many advantages over transmission over metal wires. Although the application to airborne data transmissions has not been fully developed at the time this text was written, it offers a potential for much reduction in weight and efficient operation. A review of the present state of fibre optics transmission in aircraft is given in Ref. 1.13.

1.3.6 Processing techniques

The use of complex computer simulations of the aircraft has had an important effect on the methods of data processing. Previously the flight test data were directly used for the calculation of the flight characteristics of the aircraft as single entities. Flight tests were executed to obtain, for instance, the optimal climb performance of the aircraft as a function of altitude and power setting, or the takeoff and landing distances as a function of power setting. These flight characteristics were then entered into the flight instruction handbooks. In recent years flight tests tend to be used more and more to validate and update the aerodynamic and structural models of the aircraft that were used during the design stage, so that the flight characteristics can be calculated from the models (see Ref.1.14). These computer models are continuously updated while the flight tests still go on. This provides a better insight into the aircraft's characteristics and can improve the flight test planning. Another advantage is that the equations to be used in flight simulators—which play an increasingly important part in crew training—are available at an early date. This trend has an important effect on the methods of data processing and even on the planning of the flight tests themselves.

Until a few years ago the processing was based on flight tests executed under steady conditions. The instructions connected with FAR and JAR (Refs.1.2 and 1.3) are also for a large part based on such flight tests. In recent years flight testing in non-steady flight has become increasingly popular. During such a non-steady flight a whole range of flight conditions are passed and, if planned with care and insight, a significant reduction in flight time can be obtained without loss of information and accuracy.

Processing methods have been adapted to this trend. The most important of these methods is "parameter identification," in which statistical methods are used to determine the best fit of data from several flight tests to the existing model and which update the model parameters where necessary. Literature about such methods is given in Ref.1.15.

1.4 REFERENCES

1.1 Code of Federal Regulations, Title 14, Aeronautics and Space.

- Part 23 Airworthiness Standards: Normal, utility, acrobatic and commuter category of airplanes.
- Part 25 Airworthiness Standards: Transport category airplanes.

1.2 JAR, Joint Aviation Requirements, published by the Civil Aviation Authority, Printing and Publication Services, Cheltenham, UK.

1.3 Mackall, Dale A., Marlin D. Pickett, Lawrence J. Schilling, and Charles A. Wagner, *The NASA Integrated Test Facility and its Impact on Flight Research*, NASA TM-100418, 1988.

1.4 Lyddane, G.H., *The Impact of Automation on Flight Test*, Conference Paper Issue 19, Proceedings of the Aerospace Congress and Exposition, Warrendale, PA, Society of Automotive Engineers, Oct. 1982.

1.5 Schweikhart, William G., "Flight Test Planning from the Bottom Up—An Alternative Approach to Flight Testing," *Cockpit* (ISSN 0742-1508) Jan.–Mar. 1985, pp. 5–14.

1.6 van Nunen, J.W.G., and G. Piazzoli, *Aeroelastic Flight Test Techniques and Instrumentation*, AGARD Flight Test Instrumentation Series, AGARDograph 160, Vol. 9, 1979.

1.7 Strock, O.J., *Telemetry Computer Systems—The New Generation*, published by the Instrument Society of America, 1988.

1.8 Manders, P.J.H.M., *The Onboard Computer System for the Fokker F-29 Prototype Flight Tests*, NLR MP 81034U, 1981.

1.9 van Doorn, J.T.M., P.J.H.M. Manders, O. van Teunenbroek, H. Riebeek, and A. Voskes, *MRVS-System for Measuring, Recording and Processing of Flight Test Data*, NLR MP 88034U,1988.

1.10 van de Leigraaf, R., W.A. van Dorp, S. Storm van Leeuwen, and R. Udo, *Measurement System for Production Flight Tests of New Aircraft*, NLR TP 89222L, 1989.

1.11 IRIG Telemetry Standards, IRIG Standard 106-86, Secretariat, Range Commanders Council, US Army White Sands Missile Range, NM, USA, May 1986, revised Sept. 1988.

1.12 MIL-STD-1553B, *Aircraft Internal Time Division Command, Response Multiplex Data Bus*, 1978.

1.13 MIL-STD-1553B, *Decommutation Techniques and their Integration into Post-Flight Analysis Systems*, G. Vitalone E.T.C., 1987.

1.14 MIL-STD-1553B, *Acquisition and Recording on AMX A/C, Aeritalia Experience and Present Trends*, S. Cattunai, E.T.C., 1987.

1.15 MIL-STD-1553B, *Multiplex Applications Handbook*, US Air Force System Command, 1982. System Command, 1982. Available from SCI Systems Inc., Huntsville, AL, USA.

1.5 BIBLIOGRAPHY

Aeronautical Radio Inc., *Mark 33 Digital Information Transfer System, DITS*, ARINC-SPEC-429, ARINC Airlines Electronic Engineering Committee.

Dekker, Marcel, 1988. Personick, S.D., *Fiber Optics: Technology and Applications*, Plenum Publishers, 1985.

Maine, Richard E. and Kenneth W. Iliff, *Identification of Dynamic Systems—Applications to Aircraft, Part 1: The Output Error Approach*, AGARDograph 300, AGARD Flight Test Techniques Series, Vol. 3, 1986. (Contains an 18-page bibliography on parameter identification subjects).

Murata, Hirosi, *Handbook of Optical Fibers and Cables*,

Optical Fiber Sensors, Vol. 1: Principles and Components, edited by J.P. Dakin and B. Culshaw, Artech House, 1988.

Posner, J.M. and R.A. Kitchen, "AFFTC Instrumentation System: An Introduction for Flight Test Engineers and Managers," Key Issues and Technology for Future Programs, Society of Flight Test Engineers, 18th Annual Symposium Proceedings, Lancaster, CA, USA, 1984, pp. 24.1–24.11.

Tappan, M.W., T.C. Dull, C.A. Hughes, and G.M. Tadych, "Integration of Flight Test Data into a Real-Time Simulation," AIAA 84-0552, 22nd Aerospace Science Meeting, Reno, NV, Jan. 1984.

Chapter 2

PRINCIPLES OF INSTRUMENTATION SYSTEM DESIGN

by

V.H. Knight
NASA Langley Research Center
5 North Dryden Street
Hampton, VA 23681-0001
United States

and

B. L. Dove
Research Triangle Institute
Research Triangle Park, NC
United States

2.1 INTRODUCTION

Flight tests programs invariably represent a significant investment of resources, and therefore, considerable care must be devoted to identifying the specific requirements for the flight tests and to assure that the data system will yield the required information. The types of flight test information which can be obtained are discussed in Chapter 1 of this book. The first step towards the realization of a flight test instrumentation system then is a clear statement of the objectives of the flight test program. These objectives are drawn up by the specialists which require the information: for instance, the office which has designed a new aircraft or a new piece of equipment which must be tested, or the operations office having a need to experiment with new military air tactics. On the basis of these objectives, the flight test organization will prepare a preliminary flight test program, a list of parameters which must be measured, and a basic outline for the instrumentation system design. This must be done in close cooperation between management, flight test engineers, instrumentation engineers and data processing specialists.

At this stage of the design process, various ways of organizing to accomplish the work are utilized, each with its own advantages. Should a project organization be created, an instrumentation systems engineer would normally be assigned to the organization or to support the project along with flight test engineers and test pilots. Data processing specialists are rarely assigned to a specific project, but this decision depends upon the merits of each case.

The instrumentation design phase which follows begins when the flight test engineers develop a measurements list (see Section 2.2.2). Using this list, the instrumentation engineer produces an overall design approach for the instrumentation system.

In the instrumentation development phase, the hardware and software of the instrumentation system are developed by technical specialists. In this phase, commercially available parts are chosen and ordered, and those parts of the system which must be made in-house are designed. At the end of this phase, the actual hardware and software have been produced.

When the total instrumentation system, or at least a major part is ready it passes into the test phase. The importance of this phase is often under estimated, with the result that "teething troubles" sometimes cause delays in the transitioning to the operational phase of the flight test program. It is very important to take integrated testing of the whole instrumentation system (with all software) into account when planning a flight test program, for in some cases it has required as much time as the design and development phases together. Many of the initial tests can be done in the laboratory or in the aircraft, but experience has shown that actual flight testing of the airborne equipment is essential as it reveals weak points which were not apparent during integrated testing under simulated conditions. This phase can also be used to train equipment operators and maintenance personnel, and to finalize maintenance schedules.

The procedure described above is generally applicable for the design of instrumentation systems used for testing modern high-performance aircraft.

2.2 FACTORS INFLUENCING INSTRUMENTATION SYSTEM DESIGN

2.2.1 Introductory remarks

The main task of the design project group is flight test program planning which includes preparation of the measurements list and the determination of the instrumentation system design approach. Information contained in the measurements list can help in making the main decision about the basic setup of the system such as:

- Should a digital system be used exclusively or should analog techniques be included?
- Should distributed commutation and digital data buses be designed into the system?
- Can onboard recording be used as the sole means of acquiring data?
- Is safety of flight telemetry required?
- Is real-time processing via telemetry or onboard computing required?
- Should a new system be developed with growth potential or can an older system be modified?

These are the type of decisions that often must be made at a stage where there is only a general idea of what will be in the measurements list.

The design selected for an instrumentation system is a reaction to requirements resulting from discussion of the long-range plans of the flight test program, and the specific details of the current flight test plans which include all topics discussed previously in Section 1.0.

In the normal course of events, several avenues to program success exist for the flight test engineer. From an instrumentation point-of-view, some of the possible approaches to the flight program may require much more complicated instrumentation systems than others. For this reason flight test objectives must be specific and a discussion of them at an early stage must allow for an inquiry into the reason behind their selection. Significant aspects can be, for instance, the division of flight test program between a number of aircraft and the plans which exist for more or less similar flight tests with other types of aircraft.

2.2.2 The measurements list

Definition. A measurements list is a catalog of quantities to be measured in flight tests. Typically, a measurements list contains as a minimum: the measurement name, range of values expected, accuracy, resolution, frequency response, location on the aircraft, environmental conditions, phase correlation with other measurements, flight period of importance, measurement priority, and remarks. This is prepared by the flight test engineer on the basis of the flight test program plan. The instrumentation engineer should be drawn in at an early stage and may contribute instrumentation oriented requirements to the list. Table 2.1 is an example of a measurements list. The final form of the list may contain more or less information, depending on the complexity of the system such as measurements obtained directly from ARINC and MIL-STD data buses. The measurements list is a good indicator of system cost, schedule, amount of data processing required, etc. A measurement list, being the common link between the flight engineer and the instrumentation engineer, should be kept up-to-date and reflect all agreed upon changes.

Use of the measurements list. Just why is a measurements list so vital to the instrumentation engineer? It contains the essential information needed by the instrumentation engineer to begin the detailed system design work. The final design approach can be completed only after considering requirements reflected in the list. The flight test engineer should provide a measurements list as early as possible in the program, though its formulation should not be rushed. It can be very helpful, if complete. If incomplete, it can initiate only a partial—and sometimes false—start. Situations do occur where, in order to gain the advantage of lead time on development work, an early disclosure of even an incomplete list is advantageous. Such an incomplete list should be accompanied by an indication of what, in general, may come later. The measurements list may also contain remarks, indicating further experimental work will be needed before complete information can be supplied as, for example, wind tunnel test results.

The instrumentation engineer should assume responsibility for challenging the requirements imposed by the measurements list. This validation process is a constructive practice in which the flight test engineer must participate, and even though the conversation may at times become heated, it should be encouraged to continue. It has often been experienced that such discussions have led to solutions which did not require costly special equipment. The instrumentation engineer, arguing that position, acts to prevent excesses and special cases from

Table 2.1 Typical measurements list.

	MEASUREMENT TYPE	LOCATION	RANGE	RESOLUTION PERCENT FULL SCALE	ACCURACY PERCENT FULL SCALE	FREQUENCY RESPONSE HERTZ	PRIORITY	REMARKS P = PRIMARY, S = SECONDARY
1	TRUE AIRSPEED	FORWARD EQUIP BAY	0 - 500 KTS	0.05%	0.1%	1 HZ	P	AIR DATA, ARINC 429 BUSS
2	ALTITUDE	FORWARD EQUIP BAY	0 - 40,000 FT	0.05%	0.1%	1 HZ	P	
3	ANGLE OF ATTACK	NOSE BOOM	+35°, -15°	0.05%	1.0%	3 HZ	P	METAL FLOW VANE
4	ANGLE OF SIDESLIP	NOSE BOOM	±25°	0.05%	1.0%	3 HZ	P	METAL FLOW VANE
5	PITCH ATTIDUDE	CENTRAL EQUIP BAY	±85°	0.05%	0.1%	3 HZ	P	DERIVED FROM SHIPS INERTIAL REFERENCE SYSTEMS. (INS) VIA ARINC 429 BUS
6/7	ROLL & YAW ATTITUDE	CENTRAL EQUIP BAY	±180°	0.05%	0.1%	3 HZ	P	
8	PITCH RATE	CENTRAL EQUIP BAY	±100°/SEC	0.05%	1.0%	20 HZ	P	
9	ROLL RATE	CENTRAL EQUIP BAY	±250°/SEC	0.05%	1.0%	20 HZ	P	
10	YAW RATE	CENTRAL EQUIP BAY	±100°/SEC	0.05%	1.0%	20 HZ	P	
11	NORMAL ACCELERATION	CENTRAL EQUIP BAY	+8G, -2G	0.05%	1.0%	10 HZ	P	
12/13	LONG & LAT ACCELERATION	CENTRAL EQUIP BAY	±2G	0.05%	1.0%	10 HZ	P	LONGITUDINAL/LATERAL
14	FUEL FLOW	AFT EQUIPMENT BAY	(COUNTER)	0.3%	0.5%	----	P	
15	ALTITUDE RATE	FORWARD EQUIP BAY	±30,000 FT/MIN	0.05%	5.0%	1 HZ	S	DIFFERENTIATION OF ALTITUDE
16	ENGINE PRESSURE RATIO (EPR)	AFT EQUIPMENT BAY	1 TO 3	0.1%	2.0%	3 HZ	P	
17	BRAKE PRESSURE	FORWARD EQUIP BAY	0 TO 3000 PSI	0.1%	1.0%	3 HZ	P	ANTI-SKID SUBSYSTEM
18	AILERON POSITION	LEFT WING	±12.5°	0.05%	1.0%	3 HZ	P	
19	STABILIZER POSITION	AFT EQUIPMENT BAY	+10°, -11°	0.05%	1.0%	3 HZ	P	CPT'S ON ACTUATOR
20	RUDDER POSITION	AFT EQUIPMENT BAY	±15°	0.05%	1.0%	3 HZ	P	CPT'S ON ACTUATOR
21	NOZZLE POSITION	ENGINE	0+95°	0.05%	1.0%	3 HZ	P	
22	ENGINE RPM	ENGINE	0+100 %	0.05%	1.0%	1 HZ	P	SHIP'S TACHOMETER
23/35	EXHAUST GAS TEMPERATURE (EGT)	ENGINE TAIL PIPE	500° TO 700° C	0.05%	2.0%	3 HZ	P	
56	SURFACE PRESSURE	OUTBOARD WING	± 2.5 PSI	0.05%	1.0%	10 HZ	P	DISTRIBUTED COMMUTATOR ELECTRONIC PRESSURE SCANNER
57	STRUCTURAL STRAIN	No. 5 WING SPAR	±8000 MICRO STRAIN	0.05%	5.0%	10 HZ	P	
58	ACCELERATION	ENGINE	± 15 G's	0.5%	5.0%	2000 HZ	P	ENGINE VIBRATION
59	ACCELERATION	WING TIP	± 4 G's	0.05%	2.0%	100 HZ	P	FLUTTER MEASUREMENT
60/65	PRESSURE	ENGINE NACELLE	± .5 PSI	1.0%	10.0%	20000 HZ	P	NOISE MEASUREMENT
66	VOLTAGE	CENTRAL EQUIP BAY	0 ± 30 VOLTS	0.05%	0.1%	10 HZ	S	POWER SUPPLY MONITORS
67	EVENTS	AFT EQUIPMENT BAY	(COUNTER)	----	----	----	S	
68	TIME	AFT EQUIPMENT BAY	24 HOURS	1 MSEC	----	----	S	IRIG-B

being imposed through default. It must be understood, however, that the instrumentation engineer does not have the last word about the measurements list. The flight test engineer can insist and will, though sometimes at a very high cost, get every measurement desired.

The instrumentation engineer will usually attempt to negotiate an adjustment of parameters on the measurements list (such as measuring range, accuracy, frequency response) so as to better match those of more commonly supplied or stock transducers. This can reflect in savings in both cost and time by allowing the use of units already in hand and calibrated. It is not unusual for this to be done, for typically, some of the measurement parameter specifications result from analytical work only, and though calculated precisely, do not reflect actual flight test experience. Certainly, gross changes in parameter values are beyond the scope of this suggestion.

2.2.3 The overall design of the instrumentation system

In this section, only the general and organizational aspects of the design of a flight test instrumentation system will be discussed. The more detailed aspects will come out in the later chapters of this book.

It is convenient for this purpose to view flight test instrumentation in a broader sense than just the onboard equipment, and to divide the system into two parts, which are physically distinct and which are generally developed by different groups of engineers (Figure 2.1). They are the data collection subsystem and the data processing subsystem.

The data collection subsystem. This subsystem includes all measuring channels and their associated equipment, which must be designed to function under the often strenuous environmental conditions in the aircraft. This subsystem output usually ends up in a recorder, where the information is temporarily stored; some of the equipment used on the ground is often also regarded as part of this subsystem, for instance, the receivers and the ground recorders of a radio frequency telemetry link, and even the measuring channels of any ground-based measuring equipment such as radar or laser tracking devices.

An instrumentation engineer begins his work on the data collection subsystem by classifying the entries in the measurements list according to their frequency response and accuracy requirements. These two factors heavily influence the selection of the data acquisition approach. High accuracy requirements in combination with low frequency response requirements usually point to a digital design approach. High frequency response with low accuracy requirements, and not too large a number of parameters, can often be handled more easily with an analog, wideband, frequency modulation (WBFM) subsystem. High accuracy and high frequency response for a large number of parameters are the indicators for a complex, costly system. Although a large capacity, high rate, parallel and serial format digital recorders are available which may permit a digital design approach, a careful reconsideration of the purpose of the flight tests may sometimes show that the objectives can also be reached with a, less complicated, combination digital and analog approach, in the same aircraft. In many cases both digital and analog data can be handled more simply and cost-effectively using Inter Range Instrument Group (IRIG) data recorders (Chapter 11). A few high frequency, high accuracy, channels can often be accommodated in a digital subsystem by using supercommutation. A large quantity of high frequency channels with low accuracy requirements may be handled more effectively using an analog multiplexed FM subsystem.

Digital designs with distributed commutators (Figure 2.1) can greatly reduce the complexity and weight of aircraft wiring. Instrumentation interfaces with the avionics buses on advanced military or civil aircraft provide an effective means of obtaining many flight performance measurements thus reducing the number of experiment transducers required in a flight test. Onboard computers (Chapter 3) and standardized bus systems such as MIL-STD 1553 and ARINC 429 (Chapter 9) make possible easy connections to all kinds of commercially available data acquisition equipment. Although transducers are available with digital output; nevertheless, analog-to-digital conversion will, in general, be required for many currently available transducers. Compact onboard displays employing onboard computers or microprocessors, driven from the aircraft digital subsystem measurements, facilitate multiple displays of engineering units to the aircraft crew. A major advantage of such in-flight displays is the capability to readily change display format under software control.

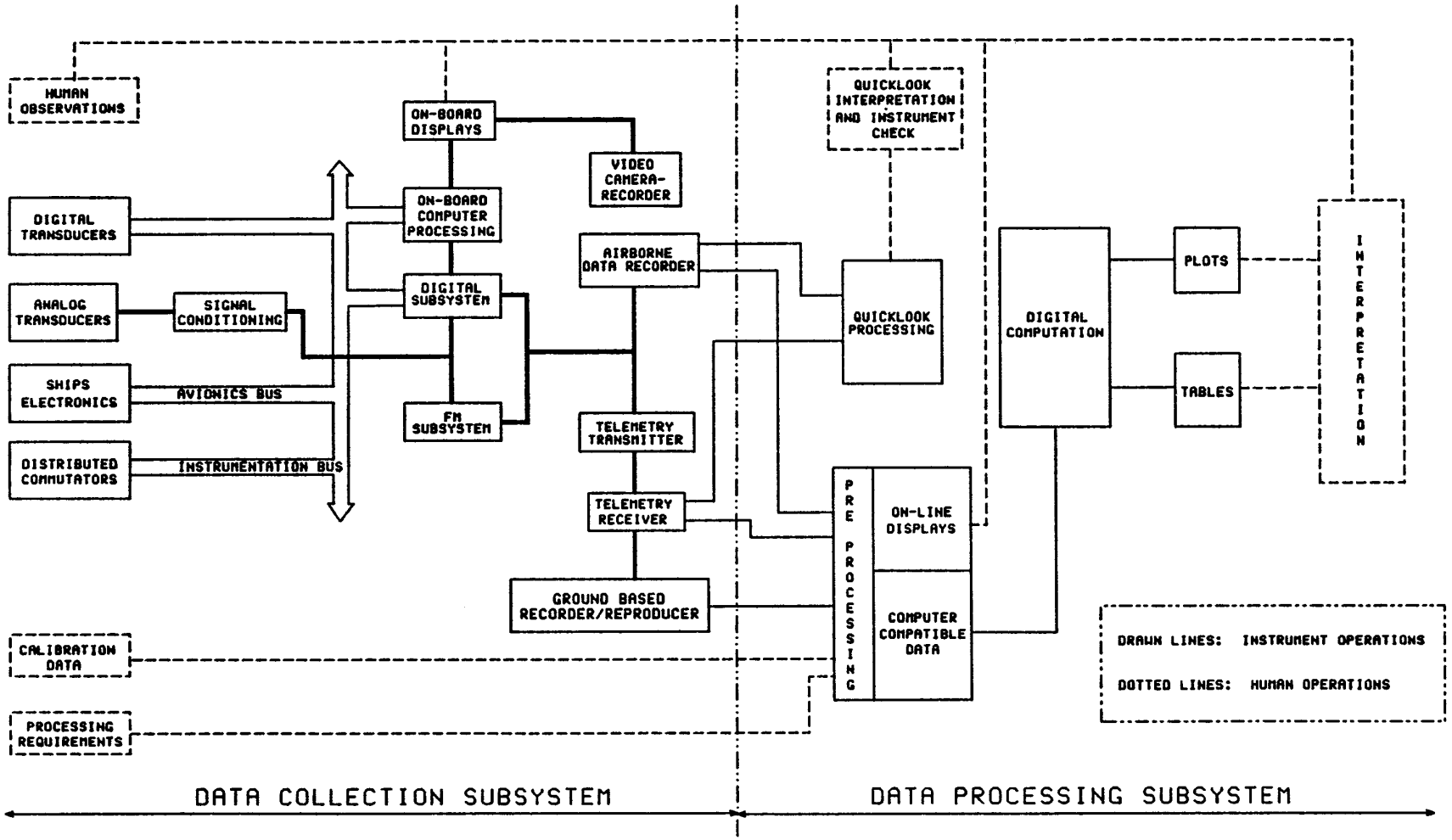

Figure 2.1 Block diagram of a flight test instrumentation system.

By further sorting of the measurements list according to other requirements, such as the period in the test program when the parameter has to be recorded, its priority, etc., the instrumentation engineer will arrive at the number of parameters which must be recorded simultaneously. Here, two approaches are possible: the data collection subsystem can record all parameters during all flights and the selection of the relevant data for each flight is done during data processing, or the subsystem can be designed to acquire only the relevant parameters during each type of maneuver of a particular flight. If all parameters are recorded, a larger number of data channels will be required, which generally means that the airborne equipment will require more space, power, etc.; however, it has the advantage that all parameters are being recorded when an unexpected phenomenon occurs. A telemetry uplink or onboard computer may be employed to change system configuration in flight, adding another dimension to system flexibility. If the second approach is used, different parameters can be recorded alternatively in the data recorder so that the digital subsystem concept becomes more attractive for collecting all flight data. Bandwidth and physical dimensions of the recording equipment can often be markedly reduced by employing a more complicated provision for switching (sampling) different parameters into the digital data subsystem format during flight. Although the second approach often requires more time during preflight and post-flight checks, readily available onboard and ground microprocessors permits automation of this task.

Another important step in the design of flight test instrumentation is the decision whether onboard recording or telemetry (or both) will be used. This decision is based upon factors such as data turn-around time, aircraft range during flight test, potential hazard, availability of telemetry facilities, and adverse weather conditions near the flight test facility. If safety data via telemetry is not required, onboard recording provides an alternative means of acquiring flight data. With onboard recording the test program may be conducted out of remote airports. In locations with adverse seasonal conditions, the aircraft can take-off in unacceptable flight test weather and fly to a location with acceptable weather then return to base after conducting the flight test. Real-time processing offers the advantage of instant feedback to the flight experimenter on how the test maneuver is progressing and whether the test objectives are being met. The use of onboard computers allow onboard observers to determine if flight test objectives are being achieved in real-time without telemetry. Even if real-time processing is used, the raw data will often also be recorded onboard the aircraft. With present-day technology, it is easier to do that in a computer compatible format, since environmentally rugged optical disk flight recorders are now available. If a noncompatible format is used, a suitable data preprocessing capability must be provided on the ground.

The more technical aspects of the data collection design are given in Chapter 9. It must be stressed that the data collection subsystem development must be made in parallel with that of the data processing subsystem, so that compatibility between the two subsystems is ensured. Also, the general lines of calibration procedures must be specified concurrently. When the general design of the data collection has been agreed upon, the detailed design of each data channel can be started (see Chapters 4 through 7), the calibration techniques (Chapter 8) and the recording or telemetry system (Chapter 11 and 12) can be chosen.

The data processing subsystem. The task of this subsystem (Figure 2.1) is to convert the collected data to a form which is suitable for interpretation. This interpretation is usually done in two stages: first, a limited analysis is done, as quickly as possible, to find out whether the tests have gone well and whether the data collection equipment has functioned correctly, which is the basis for the planning of the next flight. A complete analysis follows, which must provide the test results in their final form. The data processing equipment is generally housed in a well protected environment on the ground though, in many cases, part of the analysis is done onboard using microprocessors or flight hardened computers. For simple tests involving fewer parameters, data processing can be readily accomplished using personal computers. But, in most flight test programs, a large amount of data processing equipment is used, including one or more computers with often complicated software.

The number of parameters which are recorded simultaneously at larger test facilities has typically reached a level of one or two thousand parameters, while the turn-around time of the data processing has been reduced. The larger number of parameters per flight and the advances in computing and telemetry capability can be used to reduce the number of test flights for a given program, or to flight test much more complicated aircraft in a shorter time. In the latest designs of systems for the flight testing of aircraft, telemetered data are processed on-line using high-speed, digital, parallel processors and the information is immediately displayed to human observers on the ground enabling them to give real-time directions to the flight crew from interpretation of the data while the aircraft is still flying. If real-time processing is used, the ground calibration system must have all its results readily available to the computer; the use of personal computers by instrumentation personnel

provides an efficient means of producing easily transferrable calibration coefficient data bases to the data processing computers.

It is convenient to break down further the data processing into two phases: the pre-processing phase and the computation phase. In the pre-processing phase, the data usually remain in the form of time histories of the different parameters, but many kinds of operations are performed on these time histories, such as conversion into a computer compatible format, application of calibration coefficients to produce engineering units, channel selection, digital filtering, etc. At the end of the pre-processing phase, the data are usually recorded on magnetic tape, magnetic disk, or optical disk which is compatible with the input requirements of digital computers. In the computation phase, this data is then further processed to a final useful state. This is usually done in a centrally located mainframe digital computer, often shared with other users; although readily available, powerful, personal computer processing capabilities allow users the option of independent data processing. In many flight test programs, a preliminary stage of processing is required for quick-look and instrumentation checking. This provides time histories of a limited number of parameters, from which the quality of the flight tests can be estimated, as a guideline for the planning of the next flight, and information from which anomalies in the instrumentation system can be detected. Quick-look data are sometimes obtained by using a mobile station at remote test sites, by telemetering a limited amount of data to the ground, or by a special computer run of data from the onboard recorders. Highly portable computers are often used in these quick-look operations.

Although data processing should not put any restrictions on flight instrumentation design (Chapter 10), data processing equipment is seldom bought to service only a single flight test program and at many facilities it is available before the design of the flight test instrumentation begins. The main focus of data processing is, therefore, the production of the necessary software (Chapter 10). During the design phase, plans for the data processing program must be closely correlated with the flight test program, the capabilities of the data collection subsystem, and the organization of the calibrations, etc. Generally the data processing group must only know the format of the message and the sequence of parameters in that data message. During the development phase, programming will be done by data processing specialists closely coordinated by the instrumentation engineer and flight experimenters. Software libraries at flight test facilities generally contain many standard programs in a variety of computer languages, from which the data processing specialist may select sub-routines, for convenience in assembling the complete software for a flight test program. Ample time should always be reserved for developing, testing, and optimizing the software, using inputs from the actual data collection hardware as it becomes available. The detailed aspects of data processing are given in Chapter 10.

2.2.4 Other factors

In the design of an instrumentation system for flight testing, a number of things must be taken into account which have not yet been discussed in detail. The most important of these are listed in Figure 2.2, and are briefly discussed below.

Cost. The cost of the flight test instrumentation system is directly related to the requirements imposed. An instrumentation system designed to satisfy only the requirements of a given flight test program will have a basic cost. Below this basic cost, performance will be degraded or capability eliminated. Decisions on system design approach should be carefully weighed against overall operational requirements. Initial up-front equipment expenditures for a flexible measurement capability can be more than offset by considerable savings in man-hours achieved during the operational support phases of a flight test program. Accuracy has, perhaps, the most important influence on cost. A 5% overall accuracy is relatively easy to obtain for analog FM telemetry or recording systems; 1% is a very difficult goal for analog systems, but is much easier to obtain from digital systems. Accuracies on the order of 0.05 or 0.25% or better, which are often requested by flight test engineers, are difficult to obtain even with digital systems. Careful consideration of what accuracy is really needed should precede the design of any new instrumentation system.

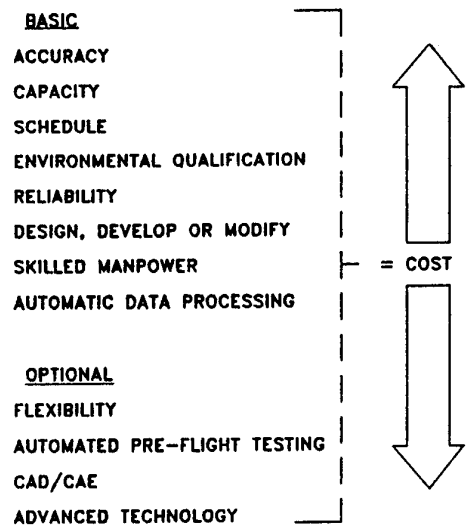

Figure 2.2 Factors that affect system costs.

The inclusion of optional items may contribute significantly to the overall cost of the system. It must be kept in mind, however, that for a system which can be used for other tests as well, the initial cost may be higher, but the cost per aircraft may be low. One of the difficulties of financing advances in instrumentation is the reluctance of flight test engineers to provide funds for requirements beyond their immediate needs. Separate battles must be waged by instrumentation organizations to get funds for improving the instrumentation capability. Experience has taught that one of the best cost-control techniques is a careful review of the need for every data channel requested, including an evaluation of its anticipated value. If the program can be accomplished using conventional techniques, this should be seriously considered.

Development or modification. From an examination of all requirements, a decision must be made regarding how much of the requirements can be satisfied using existing systems or components of those systems. If existing system capabilities prove to be inadequate, modifications (such as the addition of channels, new signal conditioning, etc.) can be considered. Modifications are not always easy to implement, but the fact that the accumulated experience with the old system can be applied to the new test requirements is an enormous advantage.

With a new system development, risks are always involved especially when the development is scheduled. Ample time should be reserved to gain experience with a new system by testing it under laboratory and flight conditions.

Schedule. Flight test instrumentation systems are in many cases developed on a very tight schedule. In practice, it is usually very late in the development of an aircraft or of an operational procedure that the measurements list can be made up. A flight test program schedule prepared without consultation with the instrumentation engineer is deficient from the outset. An adequate amount of time in the schedule must be allocated, especially if new systems are to be developed, because many unexpected delays tend to occur. In certain situations, it is advantageous to make preliminary program requirements known to the instrumentation engineer as it permits enough lead time to begin the development work.

Flight test programs dependent on the development of a new system must either provide time in the schedule or sustain the additional cost of extra manpower and overtime work.

Personnel. The design phase must be executed by highly qualified personnel of the flight test instrumentation department. For the development phase, subcontracts can be let to the industry, but a design team must be available to supervise it.

Not only the personnel involved in the design and testing must be highly qualified, the same applies for the personnel which must maintain and check the instrumentation system during its operation. Ample time in the test phase must be reserved for training personnel. Training must not be limited to just routine operations for example; the maintenance crew should know as much as possible about any limitations in the system and be

alert to detect errors and system deficiencies. A qualified and well trained maintenance crew is an important aspect of attaining program success.

Accuracy. The accuracy of flight test data does not result from the transducer accuracy alone, but is dependent upon maintaining accuracy throughout the instrumentation system. Verifying overall accuracy adds to the analytical phase of the design in that special tests on all components processing the signal must be made, precision calibration methods must be developed, and the data collection, pre-processing and processing subsystems must qualify to a more demanding specification. Experimental verification of the overall accuracy in the test phase will also require much time and expenditure of funds.

Environmental qualifications. An important aspect of the overall accuracy is that it must be reached under the environmental conditions present in the aircraft. These include pressure, temperature, vibration and shock, but also such other aspects as electrical and radio interference, power system noise, etc. The problem, especially with these latter effects, is that they are difficult to estimate beforehand. Although many precautions such as shielding and optimal points for ground connections can be taken during the design phase, only actual tests in the aircraft can show whether these have succeeded and what further measures may be needed.

Reliability. Reliability is built into a flight test instrumentation system by using quality components that have undergone a suitable qualification test program and have flight history similar to that of the intended application. Reliability is further ensured through good system design, good workmanship, and independent quality assurance inspection.

Another aspect of reliability is safety. Flight tests vary in the dangers to which the aircraft and its occupants are exposed. An attempt to minimize these dangers can place special requirements on the reliability of instrumentation systems which will be reflected in cost and schedule. Special safety measures will also have to be taken when the instrumentation is connected to the circuits of the pilot's instruments or to essential avionics systems in the aircraft. If flight parameter values are extremely critical, safety monitoring by telemetry or by onboard observers may be needed. Requirements such as this should be identified at the beginning of the program.

Maintenance. Every aircraft instrumentation system designed and built will require maintenance in its lifetime. Planning for this during system design is essential. Maintenance schedule should be set up early. The judicious selection of places to install test points for performing electrical checks without disturbing the system will pay for the effort expended during the design. The placement of test points for convenience can be as important as the existence of test points themselves. Routine maintenance such as cleaning recorder heads will, of course, be performed without using test points. Fault isolation is greatly aided through the use of appropriately located test points, built-in test equipment (BITE) capable of generating calibration signals for diagnostic purposes, and through the location of functional portions of the subsystems in physically separate modules. In this way, complete functions can be expeditiously replaced. In order to support intensive flying, an efficient, computerized system for maintenance, preflight, and post-flight checking should be provided.

Accessibility. The efficiency of maintenance procedures can be impeded if the system components are inaccessible in the aircraft. The location of test points and adjustable devices must be readily accessible for maintenance. In prototype aircraft, additional space is often provided for the instrumentation, which will not be available in production aircraft. Accessibility must be planned at an early stage, when production aircraft are modified to permit instrumentation installation for flight testing.

Documentation. Quality instrumentation from the system development phase through the data collection phase is an important element of an efficient flight test program. Documentation is required not only at the system level, but also for equipment purchased or developed under independent contract. Accurate specifications and drawings will significantly reduce overall hardware design and production errors, thereby, reducing program cost. Procedures should be developed for maintaining documentation (such as drawings and narrative descriptions of equipment, etc.) which reflects the latest system configuration. Correct documentation will minimize delays during the analysis and troubleshooting of equipment or software. Use of readily available and cost effective computer aided design and computer aided engineering (CAD/CAE) software and hardware tools will make the documentation task much easier, as well as instrumentation design, simulation, and production tasks.

Flexibility. Flexibility is the designed-in capability of an instrumentation system to be changed to meet differing flight test requirements and situations. The objective of flexibility is to minimize the amount of change

required in an instrumentation system as a result of large changes in a flight test program and even to adapt it to other flight test programs, in other types of aircraft. For pre-processing and processing systems, which involve large capital investments, flexibility is essential. though a "universal" flight test instrumentation system would be both too costly and ineffective, a system designed to satisfy a number of flight test programs, in other types of aircraft can be cost effective and the least obstacle in a fast-paced schedule. Flexibility cannot by limited to system capacity and electrical characteristics. If more than one aircraft type is to use it, the instrumentation system will also need flexibility in its physical design.

Standardization. Standardization of designs, components, and layout and construction at the subsystem level or lower, contribute to system flexibility. For example, a system designed and constructed in the form of a compatible set of modules or printed circuit plug-in cards can be used to assemble several flight test instrumentation units without the need for a completely new design. Standardization, in general, aids maintenance personnel through familiarity gained by repeated use and contributes to lower cost through quantity purchases and fewer spare parts requirements. The repeated flight experience of components and subsystems provides realistic reliability information and increased confidence.

2.3 CONCLUSION

The subjects introduced in this chapter represent the logical first order of business in the design of an instrumentation system in that goals must be established before detailed design can begin. From this point forward, design specialists must decide how best to fulfill the stated requirements. There are many significant technical decisions to be made before a complete system can be realized. Sensors, transducers, signal conditioning techniques, and electronic hardware must undergo careful analysis and laboratory testing. Software must be programmed and tested. In the following chapters of this book, the detailed design of instrumentation systems will be discussed.

2.4 BIBLIOGRAPHY

1. *Digital Time Division*, Command/Response Multiplex Data Bus, MIL-STD-1553B, Sept. 21, 1978.
2. Funk, Donald G., *Electronic Engineers Handbook*, Second Edition, McGraw-Hill, 1982.
3. IRIG Telemetry Standard 106-86.
4. Law, Eugene L., *Telemetry Applications Handbook*, Pacific Missile Test Center, 1987.
5. Liptak, B.G., *Instrument Engineers Handbook*, Vol. I and II, Chilton Book Company, 1969.
6. *Mark 33 Digital Information Transfer System* (DITS), ARINC Specification 429-10, Mar. 16, 1987.
7. Stiltz, Harry L., *Aerospace Telemetry*, Vol. I, Prentice-Hall, Inc., 1961.
8. Stiltz, Harry L., *Aerospace Telemetry*, Vol. II, Prentice-Hall, Inc., 1966.
9. Taylor, James L., *Computer Based Data Acquisition Systems*, Instrument Society of America, 1986.

Chapter 3

INTRODUCTION TO THE DESIGN OF COMPUTER SYSTEMS AND RELATED SOFTWARE

by

Edmund M. Hamlin
NASA Ames Research Center
Dryden Flight Research Facility
PO Box 273
Edwards AFB, CA 93523-0273
United States
and
A. Lejeune
Centre d'Essais en Vol (CEV)
Bretigny-sur-Orge
France

3.1 THE NEED FOR COMPUTER SYSTEMS IN FLIGHT TESTING

In modern flight testing, computer systems are an integral part of the instrumentation system. Calibration functions with multiple coefficients and complex temperature dependencies, high-resolution digital sensors, concatenated avionics bus data, and other complex requirements, unheard-of 10 years ago, are forcing the flight test engineer into the use of ground processing systems of increasing complexity. The large quantity of parameters, combined with requirements for higher data rates, are compelling the designers to use ultra-high-speed processors. The expense of conducting flight test missions puts great pressure on the test engineers to avoid unnecessary repetition of flight conditions. The volume of information relating to flight test points can only be managed effectively by computer database techniques.

The subject of how to best utilize the computer is often a difficult one for the flight test engineer. What should be expected from data processing and how can it best be used? To what extent is it necessary to understand programming languages? To what degree must this technology be understood to be able to define a system? How does the flight test engineer initiate a dialogue with computer experts?

The analysis which follows is an attempt to clarify the relationship between the world of flight testing and the computer experts. It presents a practical process for organizing an effective system design effort, with emphasis on the software aspects of ground-based systems.

3.2 AN ORGANIZED APPROACH TO SOFTWARE SYSTEM DESIGN

Since the advent of computer systems, particularly during the 1980s, there has evolved an organized approach for defining, designing, testing, implementing, and maintaining data processing systems. The following paragraphs outline this organized approach and explain how it can be applied by the test engineer to flight test.

3.2.1 The evolution of systematic software design

The "good old days" are often referenced in many contexts. In computer engineering, those were the days when an engineer could throw together a system without much forethought or planning. Software was created while sitting in front of the terminal, and testing was what happened after the software was installed and run. If the results looked good, the process was considered complete. Frequently there were problems later on. Sometimes the users were fortunate in that the original designer had not departed for parts unknown and was able to find the notes on the design and remember the logic of the faulty section of software. But often the users were not so lucky and the designer was unavailable. No one else was able to figure out the programming style, and the whole section had to be rewritten by someone else.

While this casual approach to system design flourished, many managers and engineers pondered why computer systems should be an exception to the rule of sound design procedures. Common sense dictated that they were going about the whole process backwards. For example, when construction engineers design a bridge, they first determine where the bridge will be located, how many vehicles it must accommodate, and so forth. In other words, the designer starts by defining the problem in the largest possible terms, and from there works through more detailed definitions until the bridge design is complete. In data processing, designers were performing detailed structural design before they knew what the whole structure looked like. The result was a hodgepodge of software that characterized the "good old days." Much of the discomfort with computers and software possessed by non-computer professionals resulted from bad experiences with unstructured design processes.

3.2.2 Structured, modular programming techniques

Fortunately, the advocates for sound design processes for software have prevailed. There is a validated set of rules for defining, designing, testing, and maintaining software systems. The technique involves defining a system by determining the largest problem and then breaking it down into ever-smaller sets of problems, creating a design hierarchy resembling a pyramid. This technique is termed "top–down" design hierarchy. It is familiar to engineers as the manner in which most engineering problems are defined. The software is designed, coded, and tested in small, manageable pieces called "modules," that consist of 100 or fewer lines of software code. This programming technique, called "modular programming," derives its name from the practice of building software in discrete modules that are later integrated into a complete program or software system. The salient feature of these rules is that the logic of the compact modules can be easily understood by any competent programmer, and thus can be easily maintained or modified.

Along with modular, top-down programming, there exists another set of ground rules called "structured programming." This term refers to the use of unambiguous programming logic, frequently by use of a "structured" high–level programming language. Other terms for this program structure are "IF–THEN–ELSE," "DO WHILE–DO UNTIL," and "GOTO-less." All refer to particular linguistic features of the software that render the programs created much more understandable. While structured programming usually refers to a high-level language such as PASCAL or ADA, it is possible to write programs in low-level assembly language, or "unstructured" high-level languages such as FORTRAN or BASIC by strictly following the fundamental rules of structured programming. The greatest advantage of the newer high-level languages such as ADA is that they tend to be "self–documenting"; that is, the actual code as written also acts as a compilation of the program logic. The need for written algorithms or other high-level documentation is not eliminated, but it does reduce the need for extensive explanations of program logic. Finally, to maximize the coherence of any program code, it is a good idea that the programmer make liberal use of the "comment" field within the software listing. It makes the task much more straightforward for the next person who must modify the program. Because comments only reside in the source file containing the original program code, and not in the compiled program memory, they are "free" and do not impact ultimate memory requirements.

3.2.3 The importance of teamwork and communication

Teamwork is important in any group effort, but it is crucial for the successful design of a data processing system. The flight test engineer, as the end user, must be intimately involved with the software requirements definition and must be an active participant in all of the testing. This involvement allows minor deviations to be caught and corrected before they become unmanageable. An added advantage is that the software designers are kept in contact with their customer (the flight test engineer) during the entire design process. Many problems that are not discovered until well into the design process could have been forestalled by good communications at the beginning.

Similarly, it is imperative that the test engineer take the initiative to ensure that the development personnel stay involved with the system throughout its lifetime. The user of the system must accept that changes are inevitable. The change process is much less painful when the system developers responsible for implementing the changes are familiar with the system.

3.3 THE DESIGN OF SOFTWARE SYSTEMS

With the preliminary explanations and definitions accomplished, a detailed discussion of the creation of a data processing system then follows. Discussed are a conceptual model of the data processing systems, the key personnel involved in a design, and the organization and execution of a data processing design project.

3.3.1 The elements of a data processing system

While there are many ways to look at a data processing system, one model depicts the five major elements and how they interact to form the total system. The elements are: hardware, software, data, procedures, and trained personnel (Ref. 3.1).

The important aspect of this model is that it formally recognizes the need for trained personnel and formal procedures. Commonly used models may focus entirely on hardware and software and ignore the human aspects of the design. However, it is humans who must operate the systems and interpret the results and who are adversely affected by a poor design. Often, data processing systems were imposed on inadequately trained personnel who obtained their instructions verbally or from the "backs of envelopes."

A professional data processing organization recognizes that training and documentation are an inherent part of their product, and a large share of the design effort is devoted to documentation and training. The flight test engineer should be aware that in an attempt to cut costs, one of the first places for reduction is the system documentation. However, the flight test engineer must not allow this to occur. Experience has shown that the project is much better off with a well-documented mediocre design than with a poorly documented superior design. Also, personnel who are well trained on the mediocre system perform better than those who are poorly trained on the superior system.

3.3.2 Design personnel

As a layman who initiates the dialog with data processing experts, the flight test engineer relies most heavily on the *systems analyst* to translate technical requirements into a system specification. In a sense, the systems analyst is bilingual, because this individual is expected to speak both flight test and programmer language. A good systems analyst does not attempt to dictate project needs, but instead listens to the flight test experts' needs, stated in their own terminology. The flight test engineer and the systems analyst are the primary members of the design team whose initial product is the functional specification. Simply put, systems analysts are data processing experts who interface flight test engineers to the system designers. Systems analysts are selected as much on the basis of their people skills as by their technical prowess and organizational skills. The novice to the world of data processing should be alert for programmers disguised as systems analysts. Their lack of intrapersonal skills and insistence on the use of data processing jargon will soon reveal this pretense.

Whether they are called software designers, software engineers, or *programmers*, the key person in the data processing world is the one who translates the design specification into actual program code. The programmer works with the systems analyst to arrive at a solution to the requirements. While systems analysts deal primarily with people, the programmer deals with hardware and the instructions required to make it function. Programmers are selected on the basis of their ability to create program codes accurately and quickly.

3.3.3 Preliminary design phase

The flight test engineer should complete this process with the systems analyst. Some of the steps may seem to be a repetition of the flight test engineer's initial determination of requirements. Regardless, the following process should be used because it helps familiarize the systems analyst with the requirements.

A. Determine the *requirements*, in this order:

- What is needed (*output*)
- What is available to work with (*input*)
- What must happen in between (*process*)

Document the requirements in the language of flight test, avoiding computer terminology as much as possible to end up with a clear definition between the flight test engineer and the systems analyst.

B. Determine if a computer can solve the problem.

Working with the systems analyst, examine the requirements and decide if a computer system is an advantage in solving the problem. (Occasionally, there are problems where the computer is more of a detriment than an asset. Beware of automating systems that are not working well manually. The addition of a computer makes it more difficult to identify and correct problems.)

C. Define which software functions are required.

The object is to create a list of what functions need be performed by software. At this point in the process, software options are examined and the team is not ready to commit to a solution. If there is computer hardware in place to utilize this new application, then the range of choices regarding software is limited to those programs that operate in that particular hardware. If the hardware has not yet been selected, do the software requirements study first and base the hardware selection on the combination of hardware and software that results in the best performance. Since equivalently performing hardware costs approximately the same, the final cost of a medium system is determined by the software cost.

Software can be obtained in one of two ways: it can be purchased in final form, or it can be custom written for the specific application. There is also a combination of the two, where commercially purchased software is

modified to meet some special requirements. The systems analyst determines if software for the application is available off the shelf or if it must be created. Buying software commercially has many advantages over creating it or modifying a purchased program. When software is created or modified, the creator or modifier assumes all of the risks of success or failure and all of the responsibility for maintenance. Currently, most commercial software vendors are unwilling to provide their software in a modifiable format or to provide detailed documentation and program listings. Most vendors will not support software that has been modified by others.

Examples of commercially purchased software useful in flight test are spreadsheets (such as LOTUS 1-2-3 or EXCEL) that are useful for data manipulation, analysis, and plotting; and database management programs (such as DBASE III or RBASE) that are useful for manipulating large amounts of data, such as calibration or configuration files.

Many flight test organizations have libraries of standard software for flight test data reduction and analysis. These programs have well-documented characteristics and have been tested thoroughly. Therefore, the flight test engineer should consider using library resources before purchasing or creating new software. To avoid wasting valuable programming resources, the flight test engineer should take advantage of these existing programs.

D. Perform a cost study.

Because cost is a significant factor in computer systems, this information is of value in choosing between hardware–software options. The systems analyst can estimate how many programmers are required, and for how long. The analyst also has an idea of the purchase cost of commercial software and the update (software maintenance) costs.

3.3.4 Functional design phase

The detailed performance requirements are documented in the functional design phase. This requirements specification is written partly in the language of the flight test engineer and partly in the lexicon of data processing. A good functional specification follows a "top–down" design where each function is in a pyramidal hierarchy. At the top of the pyramid is the overall system requirement, divided functionally into subsystems, and so on, much like an organizational chart. Frequently, the systems analyst can create a block diagram of the system. Each block has a functional specification following the model outlined previously; that is, *output, input, process.*

The systems analyst also specifies the overall system "throughput," that refers to how long the system requires processing a given amount of raw data into information. In a real-time processing application, throughput is a very important design factor and can have a significant impact on hardware costs. Speed is expensive, because the speed of a system is determined by the speed of the processor and the size and speed of its memory.

From the block diagram and written performance requirements, the systems analyst can create the modular structure for the software. Each block on the functional specification depicts a distinct software function. Thus, the system is integrated by this structure of modules that are related to both the actual software design and to the functional specification. The modules can be assigned to programmers for creation, or can be fulfilled by purchasing software commercially.

Another aspect of the design that is defined at this stage is formats. Formats can be for screens, printouts, and data transfers. If the data processing system must interface with another system, the systems analyst can also create *interface control documents.* These documents are similar to the specification but detail the data formats being transferred from system to system and the media used to accomplish the transfer, whether it is by direct electronic transfer or on magnetic tape or magnetic disk.

The specification includes test requirements. The systems analyst requires the flight test engineer to provide sample data and expected results of calculations to aid in module testing and evaluating system performance.

3.3.5 Coding of software modules

The systems analyst works with one or more programmers to see that the software is created or purchased in accordance with the specifications. The systems analyst, flight test engineer, and the programmer need to work together closely to clarify specific details of the functional specification that are complex and unique to flight test technology. The specification must be kept up to date regarding any changes made during the design process.

The modules are created and tested in a development "environment," usually by use of a special software development computer system. It is typically more cost effective to use development systems and not the actual system in which the application is finally intended to reside. Frequently, the "target" system is already in use for processing data and is not available to the software developers. Development systems also contain specialized software tools for creating and debugging software that are usually not available in the target data processing system.

The modules should be coded so that they stand alone and only interact with other modules at the specified interface points. This allows modules to be tested, maintained, updated, and modified without great impact on the other modules. The long-term, or "project life" cycle costs are greatly reduced if changes in one module do not require complementary changes in several other modules.

3.3.6 Software module testing

The completed software modules are individually tested by the programmer to ensure that the modules are performing within the specification. The flight test engineer inspects the results of the tests to see how the screen and printout formats appear. Changes to these formats are the least expensive to implement prior to software module integration. Once the modules have been integrated together, changes will affect several modules, greatly increasing the cost of even a simple change.

3.3.7 Module integration

During module integration, the systems analyst and the programmers work together to combine the software into one large program. The modules are linked together and run as one piece for the first time. Problems are primarily caused by errors in the input and output data specifications. Often it is necessary to rewrite portions of a few modules to make them compatible with the rest of the software. If several modules require major modifications, it indicates that the detailed specifications were inadequate. Then, the systems analyst should carefully review the specifications before proceeding.

3.3.8 Full system implementation

At this point, the entire set of software modules is installed in the computing system that is used for the application called the "target hardware." Problems occur at this stage because of differences between the specified hardware configuration and what is actually there, such as differences in input–output, memory size and locations, and storage capacity.

Also, at this point training of the operations personnel begins. (In some cases it is important to start training at an even earlier stage in the process. The systems analyst is responsible for ensuring that operators are adequately trained.)

The target system is tested by the software development personnel to determine if the system meets the operational specification. This is viewed as a preliminary test. It is good practice to perform definitive testing by personnel other than those who perform the development.

3.3.9 Validation and verification testing

Validation and verification testing (V&V) is the last process before releasing the system for routine use (Ref. 3.2). In most organizations, V&V is handled in one of two ways: either the V&V is performed by a dedicated software test group, or it is performed by another design group not involved with the original design. Either way, it is a key concept of V&V that the personnel performing the tests be *independent* of the design effort. Strangely, errors are more likely uncovered by test personnel who are not intimately familiar with the system and who do not have a vested interest in making the system work (Ref. 3.3, 3.4).

Verification determines if the logic of the software performs according to the specification; for example, if equations are producing the expected results.

Validation determines if there are unexpected interactions, errors in the logic of the specification, or other undesirable characteristics. At this stage, the test process pays for itself. Typically, the original programmer tests the logic of the code extensively, but rarely looks for anything not belonging in the code. Validation is, in a sense, the process of looking for things not belonging in the program.

The systems analyst works with the flight test engineer and the software test team to determine V&V specifications. It is a good idea for members of the flight test team to personally take part in some of the testing.

3.4 PRODUCTION PHASE

Once the software has been released for routine use in an unmodifiable form, it is in the "production" phase. The key point to remember about the production phase is that changes are analogous to miniature design projects where all the aforementioned design rules must be followed. Changes must have specifications, test plans, and module designs. The systems analyst is the focal point during the production phase. The systems analyst drafts the change requests and ensures that the design rules are followed for the changes. Changes must be documented, coded, tested, and put through V&V prior to release for production use.

Other aspects of system design that become particularly important to the maintenance of the system are configuration control and documentation, covered next (Ref. 3.5).

3.4.1 Configuration control

Configuration control describes the process of controlling and maintaining system documentation, and controlling changes to the actual system. Although these rules apply equally to hardware or software, this discussion focuses on the software aspects of configuration control (Ref. 3.1, 3.3, 3.4, 3.6–3.12).

Configuration control recognizes that changes will always occur, and thus provides an orderly and systematic means to control and implement the changes. At some point in the project, usually just prior to release for V&V testing, the flight test engineer and the systems analyst determine that the system configuration is the baseline. Any further changes, even to correct problems or errors, must be approved and tracked through a specific process. The design is frozen and cannot be changed by the design personnel without authorization. A configuration control board (CCB) is established and chaired by the flight test engineer. The CCB consists of personnel from both the flight test and designer teams, with the goal of projectwide representation. Any requests for changes must be submitted to the CCB and approved before actual implementation. If there are several changes requested, the CCB establishes an implementation schedule and assigns priorities. The CCB provides a forum for discussing the impact of implementing or not implementing a change, and ensures that the flight test team has control of its software.

Many data processing organizations have implemented their own policies for configuration control, and may even have dedicated staff for helping to establish and administer the CCBs. The systems analyst is aware of these policies.

3.4.2 Documentation

Many managers erroneously view documentation as unproductive work, because when system design personnel are working on documentation, they are not producing code. Documentation is an essential part of the design, and a good systems analyst includes the time to create documentation in the time estimate for the overall design. Documentation includes, but is not limited to, the following items:

- specifications
- change requests and notifications
- software code listings
- operating procedures
- release notifications
- test specifications
- test results

The data processing organization has policies and practices for documentation that are provided by the systems analyst.

3.5 CONCLUSION

Software is the most labor-intensive and time-consuming aspect of computer system design, and thus the most costly. Therefore, the software design should be planned carefully, with consideration for testing, maintenance, and future requirements. The use of top–down, modular, structured design techniques has proven the most cost–effective method for creation of software systems. These techniques maximize the productivity of the design personnel and reduce errors stemming from misunderstood requirements. Techniques such as accurate

configuration control and systematic validation and verification provide a reliable means to assure software quality. Good communication between design team members ensures that the final product of the effort meets the specified requirements.

As the ultimate user of what is produced by the software designers, the flight test engineer has the responsibility to be informed of the design policies followed. Therefore, the flight test engineer must insist that the best development techniques be utilized.

3.6 REFERENCES

3.1 NASA, Basic Operations Manual, App. 14, "Software Management Requirements," Dryden Flight Research Facility, Edwards, CA, 1988.

3.2 Duke, Eugene L., "V&V of Flight and Mission-Critical Software," *IEEE Software*, Institute of Electrical and Electronic Engineers, Los Alamitos, CA, May 1989.

3.3 EIA, "Configuration Change Control for Digital Computer Programs," Configuration Management Bulletin no. 4-4, Electronic Industries Association, May 1982.

3.4 Petersen, Kevin L. and Christobal Flores, *Software Control and System Configuration Management: A Systems-Wide Approach*, NASA TM-85908, 1984.

3.5 Earls, Michael R. and Joel R. Sitz, *Initial Flight Qualification and Operational Maintenance of X-29A Flight Software*, NASA TM-101703, 1989.

3.6 NASA, Basic Operations Manual, Main vol., "Policies and Guidelines," Dryden Flight Research Facility, Edwards, CA, 1988.

3.7 NASA, Basic Operations Manual, App. 13, "Configuration Management Requirements," Dryden Flight Research Facility, Edwards, CA, 1988.

3.8 NASA, Basic Operations Manual, App. 22, "System Test Procedures," Dryden Flight Research Facility, Edwards, CA, 1988.

3.9 IEEE, "IEEE Guide for Software Quality Assurance Planning," ANSI/IEEE Std 983–1986, American National Standards Institute and Institute of Electrical and Electronic Engineers, 1986.

3.10 NASA, "Requirements for Establishment and Implementation of Software Assurance Programs," AHB 5333-1, Ames Research Center, Moffett Field, CA, 1984.

3.11 U.S. Navy, "Military Standard Software Development," MIL-STD-1679A, Dec. 1978.

3.12 EIA, "Configuration Management Definitions for Digital Computer Programs," Configuration Management Bulletin no. 4-1A, Electronic Industries Association, Sept. 1984.

3.7 BIBLIOGRAPHY

Feingold, Carl, *Introduction to Data Processing*, William C. Brown Publishers, Dubuque, IA, 1980.

Kroenke, David M. and Kathleen Dolan, *Business Computer Systems—An Introduction*, McGraw-Hill, NY, NY, 1986.

Kroenke, David M. and Randolph P. Johnston, *Computers—An Introduction*, Mitchell Publishing, Inc., Santa Cruz, CA, 1985.

Lucas, Henry C., Jr., *Coping with Computers: A Manager's Guide to Controlling Information Processing*, Free Press division of MacMillan, NY, NY, 1982.

Mandell, Steven L., *Principles of Data Processing*, West Publishing Co., St. Paul, MN, 1984.

Ort, Harry H., *Structured Data Processing Design*, Addison Wesley, Reading, MA, 1985.

Parker, Charles, *Understanding Computers & Information Processing*, Dryden Press division of Holt, Rinehart, & Winston, Inc., Hinsdale, IL, 1989.

Popkin, Gary S. and Arthur M. Pike, *Introduction to Data Processing*, Houghton-Mifflin, Boston, MA, 1980.

Chapter 4

THE METROLOGICAL CHARACTERISTICS OF A MEASURING CHANNEL

by

Dr Martin E. Eshelby
College of Aeronautics
Cranfield University
Cranfield, Bedfordshire
MK43 0AL
United Kingdom

4.1 INTRODUCTION

The purpose of performing a flight trial in an aircraft is to prove that the aircraft, or a subsystem, meets its performance specification in its flight environment. The evidence for that proof is provided by the instrumentation system which measures and stores data during the test; that data can then be processed and used for the comparison between the measured and required performance. The success of a trial depends on the quality of the measured data in that it represents the value of the measurand at the moment of measurement with sufficient accuracy.

In a typical measurement process the measurand must be sensed, converted into an electrical signal suitable for storage and stored in a permanent or semi-permanent form. Those data must then be recovered and reconstructed to represent the original measurand ready for the final data analysis. During these many processes the character of the measurand must not be changed, neither must unwanted data be added, in any way that might affect the result of the final analysis.

In this chapter a single measuring channel will be used to describe the general principles of the process of measurement and a typical system based on analogue measurement and subsequent digitisation is shown in block diagram form in Figure 4.1. Although simplified, the basic elements, their function and their interrelationship will be outlined here in general terms to serve as an introduction to the subsequent chapters which will deal with these elements in more detail. An analogue-based system has been chosen as an example because it enables the stages of measurement to be separated and described conveniently. There are, however, transducers which produce digital data and may also include microprocessors to linearise their output. Also data may be collected from a bus system in which case it will be in digital form and probably scaled in engineering units. It must be remembered that any such digital data may have been through several stages of the measurement process, sensing, transducing, conditioning, sampling and digitisation, before it is received by the flight test instrumentation system and it will be important to remember this in the data reconstruction stage.

The complete measurement system extends from the measurand through to data processing and the ground system is as much a part of the measuring system as is the airborne system although it is physically separate. This means that there must be compatibility between them; it is for this reason that the ground station is included in Figure 4.1.

The main metrological characteristics of a measuring channel are:

(i) The static characteristics, including the measurement range, calibration characteristics, accuracy and long term time dependent errors,

(ii) dynamic characteristics, covering the errors which are characteristic of the natural frequency and damping of the system, and

(iii) The system characteristics of the system as installed in the aircraft and subject to the environment.

These characteristics will be considered after the general description of the measuring channel.

4.2 THE MEASURING CHANNEL

The measuring channel is shown in block diagram form in Figure 4.1. It has been divided into two parts: the airborne station, which is installed in the aircraft under test, and the ground station in which the data analysis will usually be performed.

The elements of the measuring channel and their inter-relationship can now be briefly discussed to describe their basic functions. It should be emphasised that since transducers produce signals in different forms, analogue, digital or optical, the stages in the measuring channel may differ from those shown in Figure 4.1 which is only intended to be an illustration of a typical system and not necessarily definitive. The following chapters will be more specific in their treatment of each element of the system.

4.2.1 The airborne station

(The numbers preceding the sub-headings refer to the boxes in Figure 4.1).

1. The parameter or measurand

The parameter to be sensed may take many forms, e.g., displacement (linear or angular), force, pressure, temperature. In some cases the parameter can be sensed directly whilst in other cases it can only be sensed indirectly, or remotely; this is closely connected with the sensor and transducer and is best considered in the next chapter.

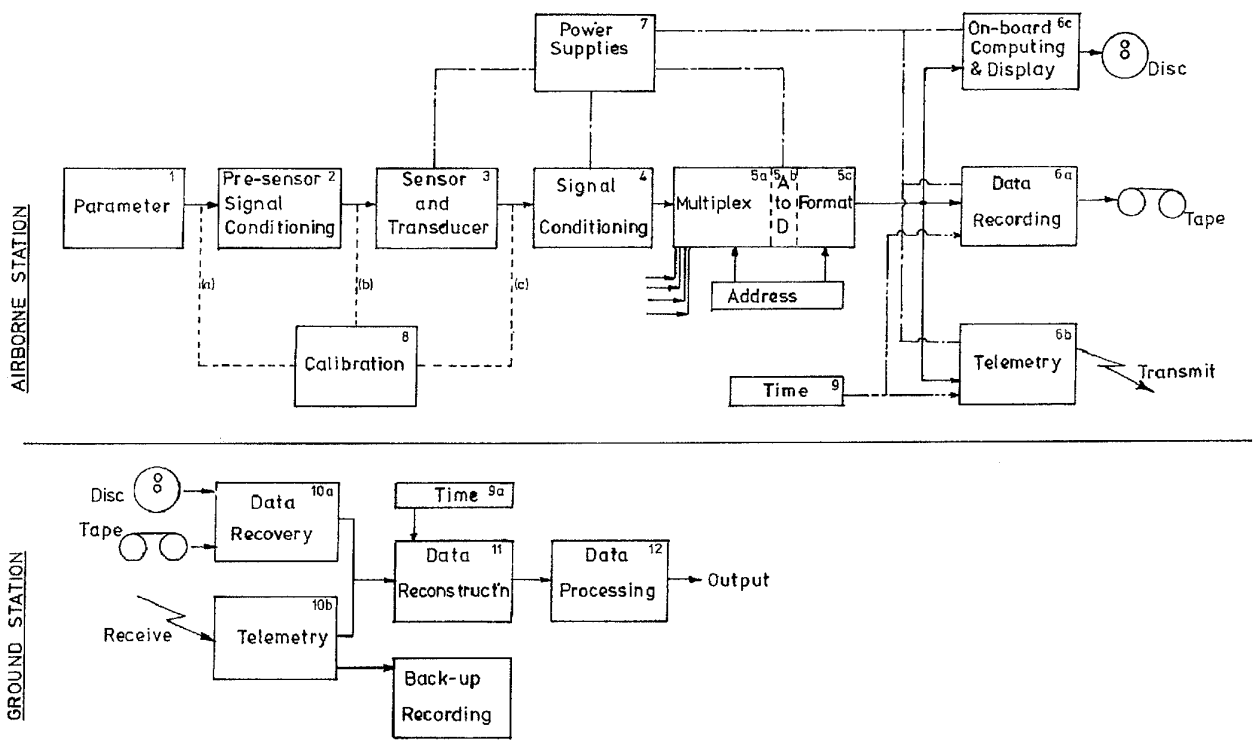

Figure 4.1 Block diagram of a typical measurement system.

2. Pre-sensor signal conditioning

In many cases the sensor installation will affect the characteristic of the measurand, this may be deliberate or it may be accidental and unavoidable. For example, a pressure transducer may be installed with a plenum chamber to reduce the effect of surges in pressure, in this way the average pressure in a duct can be measured without the transient ripples from the pump appearing, this is a deliberate introduction of signal conditioning prior to sensing. On the other hand a temperature sensor has a finite thermal capacity which, although it can

be minimised, is unavoidable and will limit the response to transients. Pre-signal conditioning should not be confused with Finesse which is defined in Section 4.4.3, as the effect of the sensor on the value of the measurand rather than the response of the sensor system to the measurand.

3. Sensor and transducer

Although often referred to as simply the transducer the separate functions of sensing the measurand and converting the sensed parameter into an electrical signal must be recognised. In some cases the two functions are virtually inseparable but they are often quite separate. For example, the level of fuel in a tank can be measured by the traditional float gauge, the float senses the fuel level and transmits the information through a linkage to the transducer which is mounted outside the tank; in this case the sensing and transducing functions are quite separate although physically linked. In a capacitance type of sensor the fuel acts as the dielectric in the capacitor and thus directly affects the electrical properties of the transducer. Optical sensors exist which produce either an analogue output (e.g., deflection of a light beam) or a form of digital optical output. In each case the signal would need to be converted into an electrical form for storage or telemetry unless photographic recording was performed.

4. Signal conditioning

The output from the transducer will generally need to be turned into a suitable form for the data recording, computing or display system. The transducer may, for example, convert the measurand into a change of resistance. The transducer must be supplied with a current so that the resistance change can be detected and amplified; the signal may be filtered at this stage to remove any unwanted frequencies and if required in digital form, sampled and digitised. In some transducers the signal conditioning is built into the device and it is only necessary to supply the transducer with power to obtain an output ready for recording.

5. Multiplexing and formatting

Before recording it will usually be necessary to combine many channels of data, this process is known as multiplexing. The data must also be arranged in a specific order and labelled, or formatted, so that it can be identified at the data recovery stage. The order in which these processes are performed will depend on the form of the signals produced by the preceding stages. Typically the data will be converted into digital form and read in sequential order to the recorder. Each block of data will be preceded by synchronisation words which identify the start of the data stream and end with other synchronisation words ending the data stream; in this way the data block can be detected by the replay system.

6. Data recording and transmission

From the multiplex and formatting stage the data can be accepted by the recording system. There are several ways in which the data can be recorded for future analysis or otherwise transferred to the analysis system.

Data Recording

Firstly the data can be recorded on a permanent or semi-permanent medium such as magnetic tape or disc in the case of digital data or on magnetic tape or paper trace in the case of analogue data. The recorders are carried on the aircraft and, after the flight, the recording medium can be removed and transferred to the ground station for replay. In some cases the recorder is also the replay unit and is removed from the aircraft complete with the recording medium.

Telemetry

The data can be transmitted directly to the ground station for processing and recording, this avoids the need to carry the recorders on the aircraft if weight or space are at a premium. It also enables the data to be processed and displayed in real time so that the trial can be monitored and controlled by the ground station.

On-board computing and display

In conjunction with the recording and telemetry systems it is possible to process some of the data on board in real time and to display the results for immediate analysis. Generally this is only possible in the case of

a large aircraft in which the flight-test engineer is a part of the test team on-board the aircraft and sufficient computing equipment can be carried. Data might also be written to disc for storage and transfer.

7. Power supplies

The on-board units of the instrumentation system will normally require electrical power. The quality of the power supply is often critical to the operation of the system, if the supply frequency or voltage changes then the output of the system may be affected. In particular the effect of transients must be considered; short duration changes in the instrumentation supply, due for example to changing demands on the aircraft power system, may produce loss of data or false data to be recorded.

8. Calibration

Before the data can be reconstructed the relationship between the parameter and the recorded signal must be established. The parameter will be sensed in terms of its physical property, for example, a displacement, a pressure or a temperature, and recorded as an electrical signal in terms of voltage, a current or a frequency. The calibration relates the electrical signal to the physical property of the parameter.

The calibration may be performed in several ways, and applied at different points in the measuring channel. Although shown with the airborne system in Figure 4.1 for clarity, the calibration will usually be carried out on the ground using ground-based equipment.

(a) In some cases the parameter itself can be exercised and the output of the measuring channel recorded, for example a control surface can be moved against a calibration protractor fixed to the airframe and the corresponding output recorded. This would produce a static calibration of the measuring channel.

(b) Alternatively the parameter may be simulated and fed to the sensor, for example static and total pressures may be fed directly to the sensors from a calibration pressure source to simulate airspeed and altitude. This, however, may not contain pre-sensor signal conditioning or the system pressure errors due to the location of the pitot-static ports.

(c) On occasions, when the sensor-transducer output is known in respect of an input, a simulated transducer output can be injected into the signal conditioning stage to relate the output to the simulated input. An example is the air thermometer in which the temperature-resistance characteristic of the device is well known. A resistance box can be used to replace the sensor for the calibration, although this will not include the effect of the installation recovery factor.

Where the measurand is likely to vary rapidly, or have a periodic characteristic, the response of the system to the input may not be the same as in the quasi-steady case. Dynamic calibration may be necessary to determine the lag and phase shift introduced by the measurement system.

9. Time

A time base may be required to synchronize the data or to identify a point at which a data stream starts. The time may be generated within the instrumentation system or it may be received from an outside source referenced to GMT. Time may be recorded as part of the data stream so that data contain their own time base and the data reconstruction does not have to rely on replay at the same rate as the recording. A time base may also be required in the data reconstruction stage.

4.2.2 The ground station

At the ground station the data are received from the airborne station, either directly by telemetry or indirectly via the recording medium, and reconstructed before it is processed. The ground station is a part of the whole system and must be fully compatible with the airborne station both in the hardware and in the data handling; the manner in which the data have been handled by the airborne system may influence the way in which it is reconstructed at the ground station.

10. Data Recovery

Data are received at the ground station either by telemetry or on recording medium.

The telemetered data are received at the ground station and fed directly to the data reconstruction stage. In most cases a safety back-up recording will also be made in case there is the need to perform further analysis at a later stage.

Data recorded on semi-permanent medium are taken from the aircraft, replayed and fed to the data reconstruction stage. In the process the data may be re-formatted into a more convenient form for handling.

11. Data Reconstruction

The data as received will usually still be in electrical units and will need to be converted into physical units or engineering units before being processed. Furthermore the data must be reconstructed to represent the measurand, in both value and characteristic, at the time of measurement. Since the measurand was sensed by the sensor it may have been converted into an electrical analogue, had unwanted noise or frequencies filtered from it, have been sampled and digitised, recorded and replayed. In the reconstruction process all of these processes must be taken into account and the characteristics of the original parameter reproduced as closely as possible, bearing in mind the purpose for which the data are to be used; there is no point in reproducing high frequency characteristics of the measurand if only the quasi-static state is needed, however the effect of the high frequency filter on the quasi-static value must be considered.

12. Data Processing

The data are now ready for processing to the user's particular needs.

4.3 ERRORS IN MEASUREMENT AND MEASUREMENT ACCURACY

When a parameter is sensed by a measuring system and the data are used to give a measurement of the parameter in engineering units the value of the measurement will not be exact but will contain a number of errors which will have occurred in the measurement process. These errors will affect the confidence in the value of the measurement, the quality known as accuracy.

The errors may arise from many sources and some may be capable of being corrected in the measurement process if their source is known, for example a temperature effect on a sensor can be measured and a correction applied if the temperature of the sensor is known, or a correction can be made for the effects of the rate of change of a measurand if the dynamic characteristics of the measuring channel are known. When corrections for known errors have been made the remaining errors determine the accuracy of the measuring system. The term 'error' is used to describe each single effect influencing the measurement accuracy; the total error is the difference between the true value and the measured (or most probable) value of the measurand and arises from the sum of the individual errors in the measuring chain.

Errors are stochastic quantities characterised by a probability distribution so that if the probability distributions of all individual errors are known then the probability distribution of the total error can be determined by the well established statistical methods for error analysis. Very briefly four important statistical characteristics should be mentioned.

(i) A systematic error occurs if the average value of the error differs from zero. Systematic errors can have a strong effect on the accuracy of the measurement, if the value of the systematic error can be determined then the measurement can be corrected so that the remaining error distribution has a zero average.

(ii) The distribution of the remaining error will depend on the origin of the error. Usually it will be close to a normal or Gaussian distribution but may well be nonGaussian in some cases. Unless there is evidence to suggest otherwise a normal error distribution is assumed and the overall standard distribution is taken to be the square root of the sum of the squares of the standard deviations of the individual errors.

$$\sigma_t = \sqrt{\left(\sigma_1{}^2 + \sigma_2{}^2 + \sigma_3{}^2 + \ldots\ldots\right)} \tag{4.1}$$

Equation (4.1) can only be used in the case of a Gaussian distribution of errors; if the error distribution is nonGaussian then the use of equation (4.1) can lead to serious error.

(iii) The individual errors must be independent. For example, if temperature affects errors in several parts of the system then those errors are not independent and equation (4.1) cannot be applied to those error distributions.

(iv) A type of error that does not fall into the normal category is the mistake of isolated bad data. This can occur as a result of a human error, electrical interference or any other random event which has no connection with the measurement system. Usually any such data are sufficiently far from all other data as to be obvious and can easily be eliminated; in automatic data processing some means of detecting such occurrences is necessary and the parity check on digital data is an example of such a method.

The accuracy of the measurement system is a quality which is determined by the value of the residual error after a reasonable amount of correction has been applied. From this definition it follows that the accuracy of the measuring channel is not a fixed quantity but depends on the degree to which the errors in the measuring system can be reduced. It will never be possible to eliminate all errors and a point will be reached beyond which it will become uneconomic to improve the accuracy of the system. This point depends on the requirement for the data; if the test is insensitive to the data then there is no need for high accuracy, however should the test be highly sensitive to the data effort must be made to eliminate as much of the error as possible to attain the accuracy needed.

4.4 CHARACTERISTICS OF METROLOGY

When designing an instrumentation system one of the most fundamental tasks is to define the requirements of each measurement channel. For each parameter the following points must be considered:

(i) What range of measurement is required?
(ii) To what accuracy must it be measured?
(iii) Is an overload likely to occur, and what effect will it have on the measurement system?
(iv) Is the parameter or measurement system sensitive to environmental conditions?
(v) What is the best form of sensor-transducer to use?

To answer these questions a number of definitions of terms used in metrology need to be made and the characteristics of the measuring channel divided into three broad categories.

(a) Static characteristics.

These are the characteristics which specify the performance of the measuring channel in respect of a steady state input, these can be sub-divided into the following topics.

(i) Measurement range
(ii) Calibration, [sensitivity, resolution, linearity]
(iii) Repeatability, [threshold, hysteresis, zero error, quantization error]
(iv) Long term errors, [nondynamic time dependent errors, drift, gain, stability]
(v) Accuracy

(b) Dynamic characteristics

These are the characteristics which specify the transient or frequency dependent performance of the measuring channel.

(i) Natural frequency
(ii) Frequency response
(iii) Damping
(iv) Phase shift or delay

(c) System characteristics

These are the characteristics which specify the overall performance of the measuring channel with respect to the working environment.

(i) Finesse
(ii) Electro-magnetic interference
(iii) Environmental conditions.

These categories and sub-topics will be discussed as isolated subjects although some interdependence often occurs.

4.4.1 Static characteristics

(i) Measurement range
The range over which the parameter can be measured within specified limits of accuracy, sensitivity and linearity is known as the Full Scale Range (FSR) of the channel and the output is generally scaled so that the maximum output (e.g., volts) covers the full scale range. The output may be referenced to a zero state, with or without an offset, and specified as positive full scale (+FS) and negative full scale (-FS), (e.g., ±-5v, or 0 - 10v). The normal measurement range over which the parameter is expected to vary will lie within the FSR although it may be necessary to design the system to operate over a greater range or Over-Range. Over-Range specifies both the amount of workable margin and the amount by which the parameter may exceed the FSR without permanent damage to the system. A simple example is the flying control which must operate between limit stops but which may only be required to be measured over a small measurement range, Figure 4.2. In this case an absolute over-range exists across which the system must operate without damage. In some cases sensors may be damaged if they operate outside their stated measurement range. The damage may be permanent if their maximum overload is exceeded or if the maximum overload is not exceeded then a recovery time may be required before the sensor will regain its original calibration.

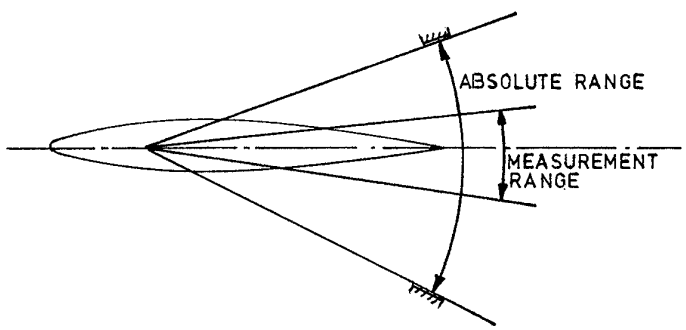

Figure 4.2 Flying control-range of measurement.

The range of environmental parameters under which the full-scale range is valid must be specified, this may include limits of temperature, vibration, shock and pressure. Operation outside the environmental limits may result in degraded performance or, in extreme cases, damage; different environmental ranges may be stated for nonoperating conditions, for example transport or storage.

(ii) Calibration [Sensitivity, Resolution, and Linearity]
Sensitivity and resolution are often confused. Sensitivity refers to the ratio between the difference in the output of the measuring channel and the corresponding difference in the input (the measurand), this is a rate of change and is expressed, for example, as Volts/Newton. Resolution refers to the smallest change in the measurand which can be detected by the measuring channel and result in a change of output, (see Fig. 4.5).

The sensitivity, S, can best be explained by reference to a static calibration curve, Figure 4.3, in which the output of the measuring channel in Volts is related to the input, (in this example a control force in Newtons), thus the sensitivity at any given point P' on the calibration curve is the slope of the tangent to the curve at that point and would be expressed in Volts/Newton in this case. The static calibration, which is determined by relating the input to the output of the channel in steady state, may not be linear and the sensitivity may vary

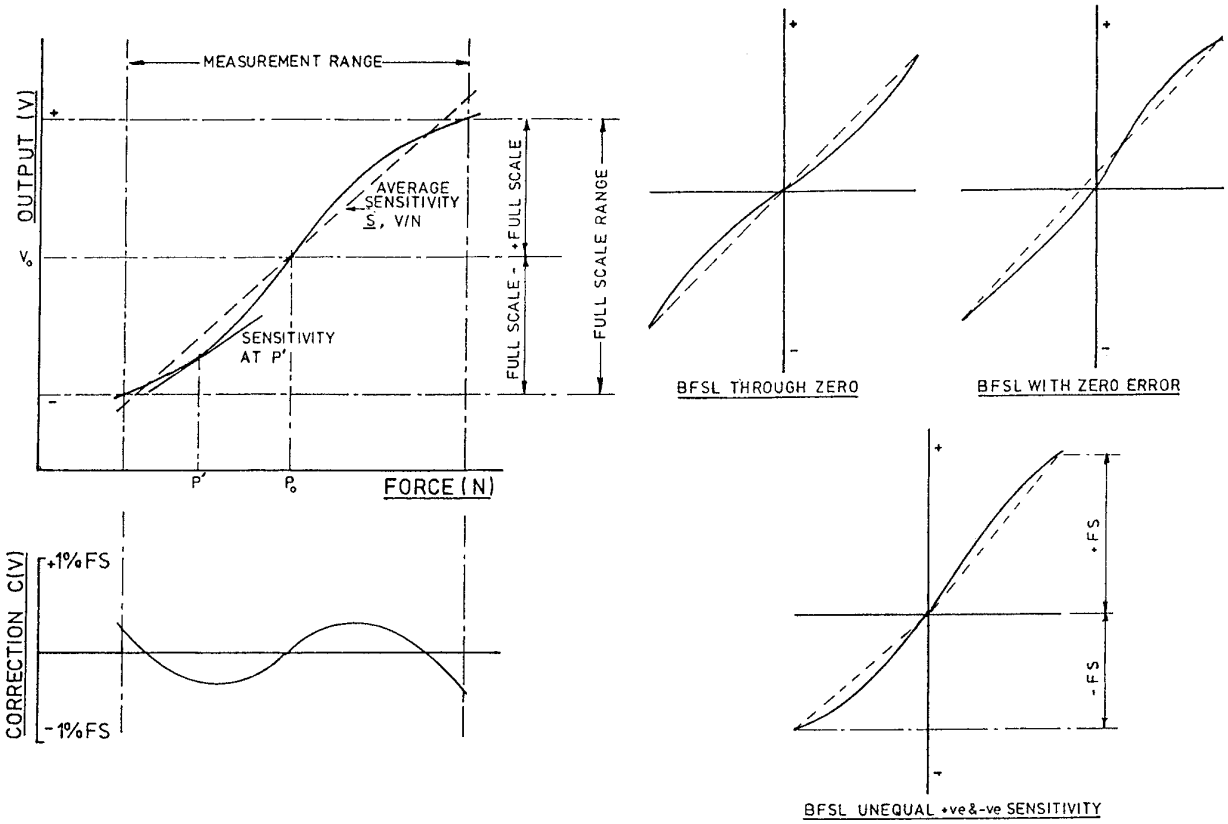

Figure 4.3 Static calibration curve.

over the measuring range. In the case of a calibration which is approximately linear the average sensitivity $\underline{S}$ can be defined as the slope of the best fit straight line (BFSL) over the full-scale range. The BFSL may be defined in a number of ways; for example, BFSL through zero, BFSL with zero offset or BFSL with unequal positive and negative sensitivities if the +FS and −FS are unequal. The choice of such lines depends on the data reconstruction method and conversion of the output back into engineering units. The difference between the actual calibration and the average sensitivity BFSL is a measure of the linearity of the calibration and the maximum difference between the linear and actual calibration is expressed as a percentage of the full-scale range (%FS). The nonlinearity can be accounted for by a correction function so that the value of the measurand can be expressed in the form,

$$N - N_0 = \frac{(V - V_0) + C(V)}{\underline{S}} \tag{4.2}$$

where C(V) is the correction to the linear calibration as a function of the output.

Where the opportunity exists to store data in digital form the calibration may be represented as a look-up table of static calibration points and a polynomial used to interpolate the data. In this way the correction for nonlinearity is avoided since there is no need to specify the BFSL for the data.

(iii) Repeatability

This is the ability of the measuring channel to repeat its electrical output for repeated returns to a given value of the measurand. This characteristic is a function of a number of sub-characteristics of the system which may be difficult to separate, these include hysteresis, zero error, threshold and, in digital systems, quantization error.

Hysteresis, which depends on the previous history of the parameter, produces a lag effect on the static calibration curves for increasing and decreasing values of the measurand, Figure 4.4. This effect may be caused by friction or backlash in the measurement system or by previous stress within the mechanical components; electrical, thermodynamic and magnetic hysteresis also exist. The essential characteristic of hysteresis is that it has different values depending on the previous history of the parameter making it difficult to model.

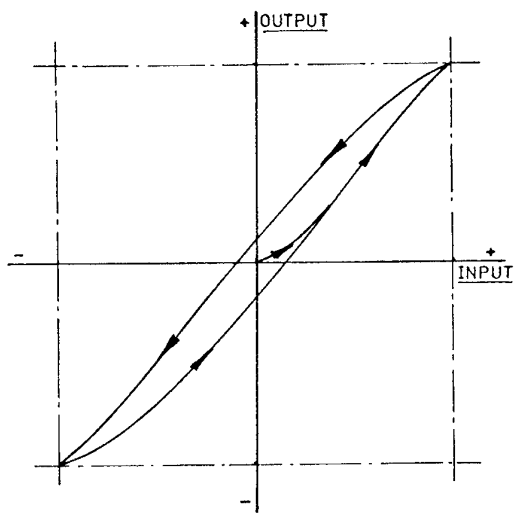

Figure 4.4 A typical hysteresis loop.

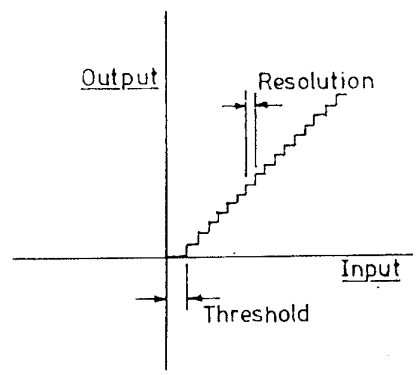

Figure 4.5 Threshold and resolution.

Threshold, Figure 4.5, is really tied to both resolution and hysteresis and is the maximum incremental input which occurs before an electrical change takes place following a reversal of the parameter; the resolution refers to incremental inputs in one direction only. The difference between threshold and resolution is explained in Figure 4.5.

Zero error is the inability of the measurement channel to produce a zero electrical output for zero parameter input; this is to be distinguished from the threshold which is the maximum incremental input of the parameter which can be made before an electrical change takes place. The zero error may be the result of drift with time or change in the environmental state of the system, this will be referred to further under system characteristics.

In digital systems the measuring range of the parameter is divided into a discrete number of steps, 4096 in a 12 bit system, and the resolution and threshold are effectively replaced by the quantization error in which the minimum detectable change is the measurement range divided by the number of steps in the digitisation. In addition there is always doubt in the least significant bit, this can have its own form of hysteresis in the changing of the last digit depending on the type of transducer used to sense the parameter.

The long-term time dependent errors, for example, drift or gain changes, are probably most likely to arise from system characteristics due to environmental effects, but degradation of reliability due to time may also occur. In the early life of the system there may be a settling down period ("running-in") during which the probability of failure will decrease to a minimum value at which it will remain until components start to deteriorate with age and the reliability diminishes. The characteristic describing the drift errors of the system is known as its stability; this term is, however, also used to describe the characteristic of a system to return to its state of equilibrium and the distinction between these uses of the term must be recognised.

4.4.2 Dynamic characteristics

If a measuring channel is subjected to rapidly varying inputs, the relation between input and output becomes different from that in the quasi-static case. The dynamic response of a measuring channel can be expressed as a differential equation. If this is a linear differential equation, the channel is dynamically linear. Because the analysis of dynamically nonlinear systems is much more difficult, the corrections obtainable with the same amount of effort are much less accurate for dynamically nonlinear systems. Therefore the designers try to achieve dynamic linearity in all instruments for which the dynamic response is important. Although absolute linearity will never be completely achieved, it is sufficiently approached in most cases to make linear analysis possible within the accuracies required. The basic dynamic characteristics depend on the order of the differential equation of the instrument.

First-order instruments (which include, for instance, many temperature probes) can be characterized by one parameter, the time constant, τ. The differential equation then becomes

$$\tau\dot{x} + x = \mathrm{y(t)} \tag{4.3}$$

where y(t) = the time function of the input,
x = the output of the instrument,
the time constant is expressed in seconds.

Many transducers have a second-order characteristic. They can be characterized by two parameters, for which the natural frequency ω_o and the damping coefficient λ are normally used. With these parameters the differential equation takes the form

$$\frac{1}{\omega_o{}^2}\ddot{x} + \frac{2\lambda}{\omega_o}\dot{x} + x = \mathrm{y(t)} \tag{4.4}$$

Here ω_o is expressed in rad/sec and λ is nondimensional.

Higher order systems often occur when more than one lower order system is used in series: if the output of a second-order transducer is fed to a second-order filter, the output of the filter will be related to the transducer input by a fourth-order equation.

The parameters mentioned above for the first-order and second-order instruments are very useful when analysing the response to simple input time functions. This will be illustrated for three types of input functions:
- a step input
- a linear variation of the input with time (ramp input)
- a sinusoidal input

The response to a step input of a first-order instrument is shown in Figure 4.6. The time constant is the time in which the error of the output function is reduced to a factor 1/e or to 37%. After 2τ the error of the output function is reduced to about 14% of the step value and after 3τ to about 5%. The response of a second-order system to a step input has a different shape for different values of the damping coefficient, Figure 4.7. If $\lambda > 1$ the output approaches the input function without overshoot; the damping is aperiodic. If $\lambda < 1$ the output overshoots the input and returns to it by a damped oscillation. If $\lambda = 1$, it is said that the system is critically damped. For $\lambda = 0$ an undamped sinusoidal output is obtained with a frequency equal to the natural frequency.

The response to a ramp input of a first-order system is, after a short initial period, an output parallel to the input function but delayed by a time equal to the time constant. For a second-order system the delay time is equal to $2\lambda/\omega_o$.

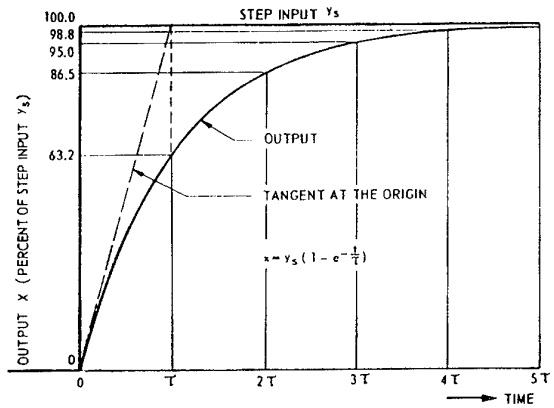

Figure 4.6 Response of a first-order system with time constant τ to a step input.

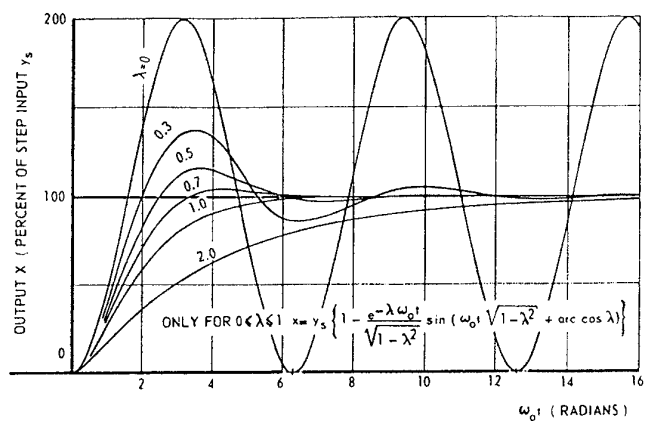

Figure 4.7 Response of a second-order system to a step input.

The response to a sinusoidal input of a first-order system in a sine wave which is shifted in phase relative to the input function and has a different amplitude. The phase angle is equal to - arctan ($\tau\omega$) (where ω is the radial frequency of the input function in rad/sec) and the ratio of the output to input amplitude is equal to the cosine of the phase angle. The phase angle and the amplitude ratio can be read from the polar diagram developed by Nyquist (Fig. 4.8). For a second-order system the amplitude ratio and the phase shift are given

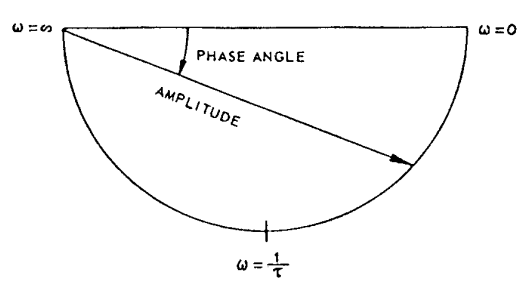

Figure 4.8 Polar representation of the frequency response of a first-order system.

in Figures 4.9 and 4.10 as a function of the damping coefficient and of the relative frequency ω/ω_o. At relative frequencies much higher than unity the amplitude response curves, drawn to a logarithmic frequency scale as in Figure 4.11, all approach asymptotically to the straight line $1/(\omega/\omega_o)^2$ for all values of the damping factor. It is generally found that the amplitude response of a system of order n at relative frequencies $(\omega/\omega_o) > 1$ asymptotically approach a curve proportional to $1/(\omega/\omega_o)^n$.

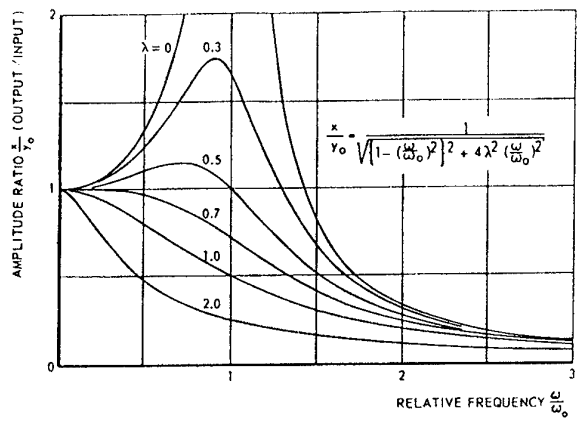

Figure 4.9 Amplitude characteristics of a second-order system.

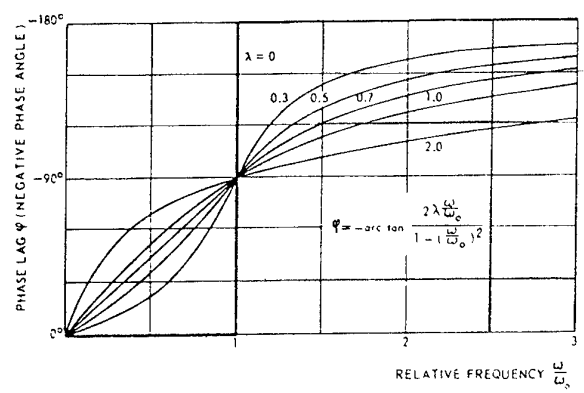

Figure 4.10 Phase characteristics of a second-order system.

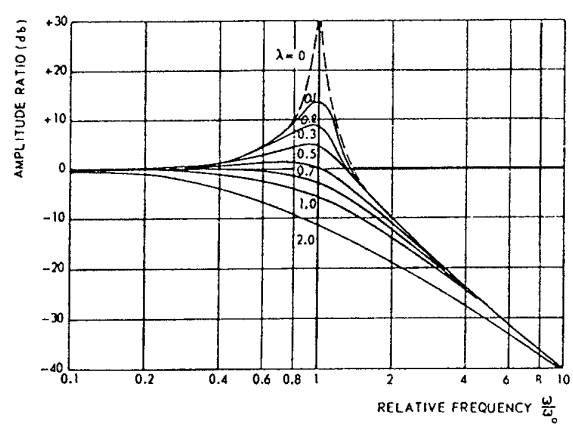

Figure 4.11 Amplitude characteristics of a second-order system, [Logarithmic Scales].

Having considered the response of first- and second-order systems to specific types of input functions the general case of the response of a linear system of any order to an arbitrary input will be considered. For every linear instrument the dynamic response characteristics can be given by an amplitude curve and a phase curve similar to those shown in Figures 4.9 and 4.10. The input time function can be represented by means of the Fourier integral;

$$S(\omega).e^{i\psi(\omega)} = \frac{1}{2\pi}\int_{-\infty}^{\infty} G(t).e^{i\omega t}dt \tag{4.5}$$

Here G(t) is the input time function, $S(\omega)$ is the modulus which represents the amplitude variations as a function of the frequency and $\psi(\omega)$ is the phase shift which is also a function of frequency.

The dynamic response of the system modifies the amplitude and phase of each sinusoid by the transfer function

$$H(i\omega) = A(\omega).e^{i\varphi(\omega)} \tag{4.6}$$

The output time function of the instrument is then

$$Y(t) = \frac{1}{2\pi}\int_{-\infty}^{\infty} H(i\omega).S(\omega).e^{i\psi(\omega)}dt \tag{4.7}$$

or combining equations (4.6) and (4.7);

$$Y(t) = \frac{1}{2\pi}\int_{-\infty}^{\infty} A(\omega).S(\omega).e^{i[\psi(\omega)+\varphi(\omega)]}d\omega \tag{4.8}$$

It will be seen that Y(t) is a sum of sinusoids where the amplitude of each original sinusoid has been multiplied by a factor $A(\omega)$ and the phase shifted by an amount $\varphi(\omega)$.

After corrections for the frequency response of the measuring channel have been applied dynamic errors from other sources may still be present; these may be due to nonlinearities in the system or inaccuracies in the determination of the response characteristics.

The procedures described in this section can, in practical cases, often be simplified considerably by a proper choice of the dynamic characteristics of the measuring channel. From Figure 4.9 it can be seen that the amplitude response of a second-order measuring channel will be correct within 1% if the bandwidth of the input signal does not exceed 20% of the natural frequency and if the damping factor is 0.7. Similarly, an amplitude response which is correct to within 5% can be obtained from a channel which has a damping factor of 0.6 in the range of relative frequencies between 0 and 1.

A sufficiently constant amplitude characteristic over the bandwidth of the input signal does not guarantee, however, that the input and output signals are similar to the required degree; phase distortion can also occur. An extreme example of phase distortion is shown in Figure 4.12. In Figure 4.12(a) an input signal is given composed of two sinusoids with a frequency ratio of 3. Figure 4.12(b) gives a correct output signal which has only lag relative to the input signal. Figure 4.12(c) shows the output signal if the phase angle of the higher of the two frequencies has been shifted by 180°. It will be seen that the signal is distorted although the amplitude response is correct at both frequencies. No phase distortion will occur if the phase angle varies linearly with frequency, as is the case in Figure 4.10, in the range of relative frequencies between 0 and 1 for a damping factor of 0.7; then at all frequencies a constant time delay occurs called the group delay. If the group delay at all frequencies is constant no phase distortion will occur.

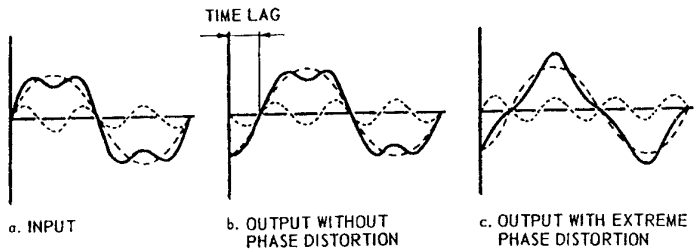

Figure 4.12 Phase distortions in a signal with frequency components f and 3f.

In many cases the input signal consists of a frequency band which is of interest to the measurement and a frequency band which is not of interest to the measurement. This can occur, for example, if accelerometers are used for the measurements of the motions of an aircraft (frequency band 0 - 5 Hz). If the accelerometer is mounted on a part of the aircraft which vibrates at a frequency of 30 - 40 Hz this vibration will also be measured by the accelerometer but is of no interest to the measurement of the aircraft motion. If these frequency bands are sufficiently separated the frequency response characteristics of the measuring channel can often be chosen so that the required signal bandwidth is reproduced without undue distortion while the amplitude of the unwanted part of the signal is reduced. This process, known as filtering, is discussed in a later chapter.

4.4.3 System characteristics

The instrumentation system, as installed in the aircraft, must be capable of operating under a wide range of physical and environmental conditions. These will vary far more extensively and rapidly than those encountered by normal measurement systems.

(i) The Physical Environment can be described by a number of characteristics.

The temperature of the atmosphere may range from Arctic to Tropical, -50°C to +30°C at sea level, and down to -60°C or less in the stratosphere.

The pressure of the atmosphere decreases to about 10% of its sea level value at 60,000 ft.

Moisture or humidity levels vary between saturated and very dry.

In the case of an airborne instrumentation system very high rates of change of these environmental states can occur. Climb rates of high performance aircraft can lead to the full range of variation being experienced in about one minute, this presents a severe test to the system and highlights the need to ensure that the calibrations and characteristics of all parts of the system are known with respect to the environmental state.

The attitude of the instrumentation system with respect to the earth axes will not be constant. The aircraft will rotate and take up new attitudes from time to time, and will also manoeuvre thus producing changes in the acceleration vectors of the system. Any sensitivity of the system to its attitude needs to be known.

Apart from the quasi-steady acceleration changes that occur vibration is usually present. This can be important in the aircraft environment as it can arise from several sources. Firstly it can arise from the aircraft itself, engines and other rotating machinery will produce a reasonably predictable frequency spectrum and the system can be designed with this knowledge in mind. Secondly the operating environment can induce a more random vibration spectrum due to turbulence which is more difficult to predict. Care needs to be exercised in the installation of the system to ensure that resonance points are avoided and that the levels of vibration are acceptable.

Dirt and contamination are problems in the aircraft operating environment, all parts of the system will need to be protected from the ingress of water, oils, dust and other contaminants.

(ii) The Electrical Environment can also be hostile to the instrumentation system.

The electrical supplies to the instrumentation system can vary in voltage and frequency as other equipment demands supply from the aircraft electrical system. This could affect the measurement if the system depends on a very stable electrical supply.

Electrical interference from other systems can induce unwanted signals into the measuring system, care must be taken to screen the system from electromagnetic interference. This can be a difficult task since there are many sources of possible interference, for example, radios, radar, power supplies, other instrumentation and static build-up on the airframe, each having its own characteristic form of interference.

(iii) Finesse is a characteristic of the installed instrumentation system. It is a measure of the effect that the sensor has on the measurand and could be called the intrusion error of the sensor. In many cases the sensor introduces a change in the local value of the property it is measuring and the true value cannot be measured directly.

For example, a vibration sensor attached to a structure will change the mass distribution of the structure and thus affect the resonant frequencies, although in this case it might be possible to apply a correction to allow for the presence of the sensor. There are cases in which correction would be practically impossible.

Other examples of finesse are:

The pressure probe which changes the pressure distribution in the flow field;
The temperature probe which changes the calorific capacity of the object whose temperature is being measured and hence its temperature;
The micrometer which exerts a force on the object being measured and thus changes its dimensions.

These effects can influence both the static accuracy and the dynamic accuracy of the measuring system, if the errors produced are negligible it is said that the finesse of the system is high. Finesse is often the most difficult characteristic to establish because it is not usually possible to perform an absolute calibration on the parameter source with sufficient accuracy.

4.5 BIBLIOGRAPHY

1. Borek, R.W., *Practical Aspects of Instrumentation System Installation*, AGARDograph No. 160, Vol. 13, 1981.
2. Doebelin, E.O., *Measurement Systems, Application and Design*, 3rd edition, McGraw Hill, 1983.
3. Morris, A.S., *Principles of Measurement and Instrumentation*, Prentice Hall, 1988.
4. Pool, A. and D. Bosman, *Basic Principles of Flight Test Instrumentation Engineering*, AGARDograph No. 160, Vol. 1, 1974.
5. van der Linden, J.C. and H.A. Mensink, *Linear and Angular Position Measurement of Aircraft Components*, AGARDograph No. 160, Vol. 8, 1977.

Chapter 5

TRANSDUCERS

by

R. Gregory
College of Aeronautics
Cranfield University
Cranfield, Bedfordshire
MK43 0AL
United Kingdom

5.1 INTRODUCTION

The transducer is usually the first element of a measurement channel and has the function of responding to the quantities of the measurand and transducing them into a form which may be useful as measurement data. Thus, for a typical flight data acquisition system, the transducer responds to the physical quantities being measured and produces electrical data.

For purely visual data, such as required in the pilot's cabin, the traditional, all-mechanical type of instrument may still prevail, but test instrumentation demands that the data be suitable for transmission, recording, and computer processing and this almost exclusively demands that the data be in electrical form. Thus the vast majority of transducers now in use produce data in the form of an electrical change; the exact nature of this data may take many forms as described in this chapter.

Many all-mechanical designs are still viable and in use; apart from the visual requirements, both pointer and numeric, there are many applications in control systems, optical transducers, and also in trace recording using either optical or stylus systems. However, the emphasis in this chapter will be upon transducers with electrical output, although much of the discussion will apply directly to the other types.

5.1.1 Transducer elements

Many principles may be involved within a transducer, and also there may be a choice of principles available for a given parameter measurement. The implementation of these principles may constitute the elements of a particular transducer. These principles may be physical, purely mechanical, or electrical; and the chapter will endeavour to describe how these elements may provide a choice of characteristic to meet the variety of applications to be found in the aerospace industry.

On the assumption that the physical quantity is to be transduced into electrical data, the two major elements of any transducer may be considered as:

The Sensor	–	The element normally and in direct contact with the physical quantity and responding to it, often producing displacement.
The Electrical Transducer	–	The element directly associated with the sensor and producing electrical data, often a displacement transducer.

Some transducer principles, such as the thermocouple, provide these elements in a single transducing function, but many have the two distinct stages.

5.1.2 Transducer specifications

Many aspects of transducer performance are discussed below, and it should be evident that the characteristics and overall performance are affected by many factors outside the transducer itself, for example, finesse and environment. It must be stressed, therefore, that a comprehensive specification and a good rapport with the manufacturer is vital in order to achieve accurate and meaningful results. A good transducer manufacturer will always be willing to work with the user to meet particular circumstances which previously may not have been encountered.

Thus, a comprehensive transducer specification will include calibration data on static and dynamic performance and the effects of environment. To this will be added the information gleaned from calibration during the system build; initially in the laboratory, then on the aircraft installation; and finally, during the flight test.

5.1.3 Parameters–definition and calibration

This subject is covered in detail in the other chapters; however, it must again be emphasised that a measurement is meaningless without a precise calibration and definition of all parameters.

All scientific measurement must be defined by numeric values and therefore all measurands must be defined as "parameters," that is, between numerically defined limits. For example, a parameter of temperature may be defined as −40 °C to +80 °C, or pressure 0 to 2 bar. To this must be added a numeric statement of the environment, particularly in terms of pressure, temperature, vibration, and acceleration.

5.2 TRANSDUCER CHARACTERISTICS

The overall characteristic of a transducer will be largely determined by the characteristics of the individual elements which make up the transducer. These elemental characteristics may be considered in three stages, namely:

Input,
Transfer,
Output.

These are treated separately below.

The performance of a transducer is not only controlled by the characteristics affecting the particular measurement, but also the responses to such factors as power supply variation and the signal conditioning function. Thus, the final choice of the transducer must encompass aspects such as installation and environmental conditions, cost, reliability, availability, maintenance, calibration requirements, and the applicability to other measurements. These aspects are discussed in more detail in the previous chapters.

Frequently, the cost, accuracy, and reliability of the complete instrumentation system may be largely determined by the choice of the transducer in the following way:

(a) The transducer will determine the quality of the measurement and data.

(b) The transducer output data form will determine the sophistication of the signal conditioning necessary to produce the desired data. For example, with an integrated electronics transducer there may be virtually no signal conditioning requirement.

(c) A smaller, perhaps more expensive transducer may well have greater finesse, for example, in vibration or shock measurement, or in pressure measurement, perhaps of an aerodynamic surface.

(d) A transducer with a good, well specified performance in terms of both accuracy and environmental performance will give greater confidence and may reduce the necessity to make further measurements. For example, an accelerometer with a good temperature coefficient of damping and a small cross sensitivity may reduce the need for temperature or cross-axis acceleration measurements.

5.2.1 Input characteristics

The most important input characteristics are

(a) The *normal measuring range* and the ranges of the environmental parameters. Generally, the best accuracy will be obtained if the range of the instrument is equal to the range of the measurand or slightly larger; this is because the errors in many types of transducer are proportional to their range.

(b) The *finesse* (defined in Chapter 4). This must be appropriate to the measurement, i.e., the effect of the transducer on the physical process being measured should be small with respect to the allowable total error.

(c) *Cross-axis sensitivity* and *cross-sensitivity*. Many transducers which are designed to be sensitive to inputs along only one input axis of the instrument also produce spurious outputs to inputs at normal to the sensitive axis. Accelerometers and rate gyroscopes are typical of this and an example may be found in an

accelerometer leaf-spring/mass principle. At rest, the system will respond to only one axis, but as soon as the spring/mass becomes deflected there is a sensitivity in a second axis (Fig. 5.1).

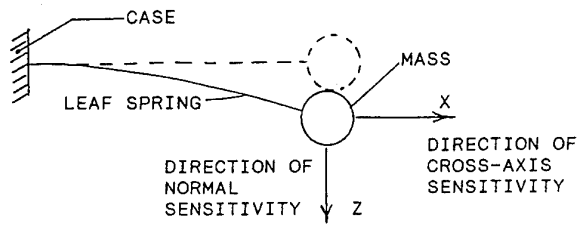

Figure 5.1. Cross-axis effects in an accelerometer with a leaf spring and mass.

For a simple system with small internal deflections, the cross-axis error may be considered as a linear product of the inputs to the two axes, and if the law which governs the cross-axis sensitivity is known and the other acceleration is measured separately, it is possible to apply a correction during data processing. However, for some types of transducer, for instance piezo-electric transducers, the cross-axis error is not always proportional to the product of the two inputs.

There is a tendency for the cross-axis error to be small if the total internal deflection is small and hence the generally superior performance of such instruments as force-balance accelerometers.

Another form of *cross-sensitivity* is where the transducer is sensitive to other parameters as well as the desired parameter. A good example is the measurement of pressure where the sensing element, such as a diaphragm or capsule, is essentially a spring/mass system and therefore will respond to acceleration as well as pressure. Additionally, the system may also be sensitive to temperature.

The cross-axis effect can often be reduced by a careful choice of the orientation of the instrument with respect to the aircraft, i.e., avoiding noisy areas and aligning the least sensitive axis of the transducer with any known more severe input axis. This again stresses the necessity for a well specified transducer and a knowledge of the environment.

Further discussion on this appears in Transducer errors and accuracy, Section 5.3.

(d) *Error in the location or the alignment of the transducer.* Knowledge of the precise location of the measurement is often vital to the true meaning of the data. For example, in many flight tests the location of the transducer relative to the centre of gravity of the aircraft, or the alignment of the sensitive axis of the transducer relative to the reference axis of the aircraft must be known precisely. Any uncertainty in the transducer specification regarding centre of mass or alignment will increase the errors in the measurement.

5.2.2 Transfer characteristics

The transfer characteristics define the relationship between the magnitude of the input quantity and the magnitude of the output quantity of the transducer. They are determined from the static calibration, the dynamic response characteristics (amplitude and phase), and the associated error distributions. These are defined and described in Chapter 4. As already stated there, the transfer characteristics will, in general, change with the environmental conditions, and probably the most troublesome of these are temperature, shock and vibration, and electromagnetic interference.

5.2.2.1 Damping

Many transducers and systems require to be damped in order to provide a satisfactory performance. This is particularly relevant here to accelerometers and rate gyros where both the amplitude accuracy and the time relationship of the data depends directly upon the damping ratio.

Damping does not directly apply to simple lag instruments such as displacement transducers or thermocouples, but to any system that constitutes a spring/mass system. These will have a resonant frequency (or natural frequency, *fn*) and at the frequencies around *fn*, the input to output characteristics will change as shown in

Chapter 4, Figures 4.9 and 4.11. This is for a simple second order system and is the basic characteristic found in most inertial transducers, including accelerometers and rate gyros and in non-inertial instruments such as pressure transducers, galvanometers, and others. Thus it may be seen that an un-damped system may become uncontrollable and unpredictable at *fn*, and therefore these transducers require to be either damped or be used well below *fn*.

Damping may be achieved using friction, fluid (gas or liquid) or by electro-magnetic principles, as discussed below.

5.2.2.2 Damping requirements

The basic requirement is for velocity damping, and from the figures of Chapter 4, it may be seen that if a damping ratio of about 0.64 is chosen, there is a well controlled amplitude characteristic; and equally important, the phase relationship is virtually linear from zero frequency to *fn*, and hence the system is said to have a constant group delay. The characteristic may then be considered as a simple time delay equating to 90° lag at *fn*.

As a general rule, a transducer with a damping ratio of 0.64 may be safely used up to frequencies of at least 0.7 *fn*. However, it must be stressed that for many transducers the damping ratio changes markedly with temperature such that over the working temperature range the ratio may typically vary from 0.3 to 0.9. This is particularly true of oil damped transducers, although the manufacturer's specifications do not always make this clear.

It should be noted also that in general, it is not possible to damp piezo-electric transducers, but since these usually have a high *fn*, this is not such a problem in practice; and the general rule here is to constrain the measurement frequencies to below about 0.2 *fn*.

5.2.2.3 Damping methods

There are basically three ways in which damping may be added to a transducer system, namely:

(a) Friction. This is often a simple and cheap method; however, when used for damping it tends to be unpredictable and subject to stiction. It is therefore generally confined to the cheaper industrial transducers and is rarely used for precision instruments.

(b) Fluid Damping. This is a widely used principle and a typical method is to immerse the complete spring/mass assembly in silicon oil such that the viscosity of the oil coupled with the associated clearances provide the required damping. One major disadvantage of this method is that the oil viscosity is temperature sensitive, and therefore steps must be taken to compensate for changes of damping ratio with temperature; this may range from 0.9 under cold conditions to 0.3 when hot. Some transducers, notably rate gyros which self heat, are fitted with temperature compensating mechanisms.

    Gas has the advantage of being much less temperature sensitive, but because of the necessity to have much finer clearances than for oil, the transducers become more expensive and less competitive with the force balance types and therefore tend to be limited to specialised situations.

(c) Electro-Magnetic Regeneration. This important method relies upon principles similar to the moving coil meter (or galvanometer). The method has the advantage of not being so temperature sensitive, and also there is usually electrical control over the damping ratio. This principle is used extensively for force balance and servo transducers and also for mirror galvanometers in trace recorders.

5.2.3 Output characteristics

These characteristics cover such topics as the data levels and the type of data produced by the transducer, i.e., analogue or digital, and are often termed the data format or form (Section 5.4.4). From this, consideration may be given to the general requirement for circuitry immediately around the transducer; this may include electrical filters.

In some respects, the output characteristic is a less important consideration in the choice of a transducer, because the signal conditioning functions can usually provide the conversion to a particular data requirement.

Most analogue data recorders and A-D converters fundamentally require a dc data input, and therefore the simple dc analogue form of transducer, such as the potentiometer, may fundamentally be connected directly to these equipments. However, in practice there is usually a need to add gain for scaling and frequency filtering to control noise and aliasing, etc., and therefore these signal conditioning functions must be provided, either as part of the recorder, or as a separate function.

It is frequently very advantageous to have a frequency modulation (FM) type of output. This is for two main reasons. Firstly, FM provides a very error-free method for data transmission because of the relative immunity to amplitude variation. Secondly, the frequency to digital conversion process is fundamentally very accurate.

Before discussing details of transducer data, it should be recognised that transducers generally fall into either of the two categories, as follows:

(a) Passive change – where an electrical change takes place in response to the measurand, but is generally not detectable as data until a polarising voltage or current is applied, for example, potentiometers or inductive displacement instruments. In these cases, the form of the data is directly related to the type of polarisation, i.e., dc polarisation would produce direct analogue data, or ac would produce a carrier type of data.

(b) Active or self-generating types – where an electrical energy is generated in response to the measurand. Instruments such as thermocouples and electro-magnetic generators (tachos) generally produce a voltage which is representative of the data, although additional elements (such as a cold junction) may be required. Others, however, produce the energy in a less recognisable form, typically piezo-electric devices which produce charge, and a charge converter must be used in order to produce meaningful data.

This is further discussed in Output data formats, Section 5.4.4.

5.3. TRANSDUCER ERRORS AND ACCURACY

Transducer errors largely stem from the effects of the environment. This may be stated because under tightly controlled conditions, most errors may be nullified by the calibration process. However, the mechanical effects of installation and such things as temperature changes, vibration, and electrical interference, all add up to an error situation which is to a large extent uncontrollable and unpredictable. Hence, most of this section is devoted to the environment stimulated source of error.

Accuracy is discussed in Chapter 4 and is clearly a matter for many factors including what is discussed here. Additionally, accuracy is affected by errors in the transduction process itself, an example might be the thermocouple, which is dependent upon the relationship between temperature and the particular alloys in use; this may not be linear nor consistent.

Thus the design of the transducer and its installation can have a very great effect upon the ultimate performance. For example, a pressure measurement may be achieved using a transducer based upon a diaphragm and strain-gauge system. However, problems may occur because the diaphragm may be very susceptible to vibration intereference and the strain gauges would be susceptible to wet conditions unless specifically protected. Also, such things as clogging of the orifice by wet dust, etc., excessively long piping, and case distortion during installation may all add up to a serious error condition.

Circumstances often demand that a number of environmental conditions have to be considered, for example, temperature, pressure, humidity/immersion, sand, dust, salt, and chemical spray. Radiation may also be a consideration for specific applications. Therefore, the general rules should be observed, as follows:

(a) Choose a transducer which is inherently protected and generally capable of withstanding the situation. For example, the LVDT type of instrument may be inherently well sealed with no rubbing contacts, whereas the potentiometer is much more vulnerable.

(b) Protect the transducer from the situation, i.e., dust and moisture covers, temperature protection and possibly heating/cooling, vibration isolation, etc.

(c) Follow good engineering practices and the manufacturer's recommendations for installation.

(d) Adhere to the standard rules for data connection, i.e., screened twisted pairs and selected grounding points.

5.3.1 Errors due to temperature change

The main effects of temperature are zero and/or sensitivity shifts in the data output and a change in the damping coefficient. Some transducers may be compensated for temperature error by using various electrical and mechanical techniques; however, beyond about 250 °C, temperature compensation becomes extremely difficult to design and implement. Various methods are used to protect transducers from extreme temperature variations; these include temperature-controlled compartments, air-and liquid-cooled enclosures, heat sinks, integral heaters, and heater blankets.

One of the most insidious and often little recognised environmental effect is caused by temperature transients. These cause temperature gradients in the instruments which can produce temperature errors much larger than those which occur under (quasi-) static conditions in the same temperature range. It is practically impossible for the user to correct for the effects of these temperature gradients, their effect can only be reduced by isolating the transducer as much as possible from the temperature environment.

5.3.2 Errors due to shock and vibration

The effects of shock and vibration are especially difficult to eliminate for inertial transducers such as accelerometers and rate gyros, because they act upon the transducer in the same way as the measurand. For example, an accelerometer used to measure the motion of the centre of gravity of an aircraft will also respond to any vibrations present at its mounting plate. If the signal to be measured and the spurious vibration signals are in the same frequency band, it is impossible to separate them by filtering.

If the noise frequency is markedly different from the frequencies of interest, there are three possible methods to reduce the spurious vibration signals:

(a) Choose a transducer with a frequency response which will transduce the signal of interest without distortion but which will be insensitive to the unwanted frequencies.

(b) Use a mechanical low-pass filter (i.e., pre-sensor signal conditioning, Chapter 4) between the source of the excitation and the transducer.

(c) Introduce an electrical filter in the output of the transducer.

In general, using a transducer with an optimal frequency response for the measurement is preferable to the other two methods mentioned; however, this is frequently not possible.

5.3.3 Bandwidth and the use of filters

Mechanical filters, such anti-vibration (AV) mounts, frequently have the problem of non-linear frequency response and will therefore distort the signal of interest. Reasonably linear vibration isolation mounts are available and are used on some inertial platforms; they are, however, costly and have to be specially designed for each transducer. In some cases good results have been obtained by mounting the inertial transducer on a wooden pad or a relatively large wooden board; wood provides a reasonably linear frequency response and more damping than most other construction materials.

The use of electrical filters in the data output of a transducer may prove successful provided that there is confidence that no transducer overload effects are possible which may drive the transducer outside its linear range. If the vibration frequency is much higher than the cut-off frequency of the filter, but still within the bandwidth of the transducer, gross distortion due to transducer overload may be present, although the frequency would not be evident at the filter output. An example of this effect would be the case where a closed-loop accelerometer is used to measure aircraft motions. These transducers are chosen because of their inherently high accuracy; they have, however, a band-width of the order of 0 to 200 Hz, though the frequency range of

the signal of interest is of the order of 0 to 5 Hz. High-frequency vibration of the transducer mounting plate may then saturate the servo amplifier and thereby cause large distortion. In this case the only way to reduce the errors is to reduce the amplitude of the high-frequency vibration sensed by the transducer, and this can only be done by using a mechanical filter between the vibrating mounting plate and the transducer.

The effect of shock and vibration on non-inertial transducers may be suppressed by the same methods as mentioned above; here, however, the most practical method is to use anti-vibration mounts. Also, transducers with small movable masses and a stiff construction are generally less susceptible to vibration than others; for example, a high-range pressure transducer should be less sensitive to vibration than a low-range instrument.

The detrimental effects of angular vibrations and especially angular accelerations on some transducers is frequently overlooked. Angular accelerations can for instance affect the accuracy of rate gyroscopes to marked degree.

Similar arguments apply to most other measurements. Also further discussion on bandwidth appears in Section 5.4.2.

5.3.4 Errors from EMI

Transducers are often required to operate in the presence of strong electro-magnetic interference (EMI), i.e., power cables, generators, etc. Generally speaking, transducers with low output impedance, high output voltage, and short cable lengths are less susceptible to this type of interference. Other transducers may be used in this kind of environment, but they must then have specially designed shielding and electrical grounding circuits (Section 5.4). This is one area where an optical approach has an advantage.

5.3.5 Other error sources

Clearly there may be both mechanical and electrical, or even chemical effects. Adjacent corroded surfaces may easily become electrical cells and may generate erroneous voltages into the data circuit. Corroded connectors are a particular case, showing this type of unstable electrical performance (residue of coffee spillage has been known!); also, for high impedance circuits such as for piezo-electric transducers, electrical leakage will deteriorate the low frequency performance.

5.4 ELECTRICAL CHARACTERISTICS

5.4.1 Data levels, impedance, and matching

The output level is usually expressed in terms of the output voltage or current. The output voltages are roughly divided into high-level outputs, 0 to 5 volts or higher, and low-level outputs, typically 0 to 20 millivolts. Often different signal conditioning equipment is provided for high-level and low-level outputs.

The impedance of an electrical circuit encompasses both the resistive and reactive components. However, many measurement and transducer situations are dealing with low frequencies, and therefore the electrically reactive components of inductance and capacitance are of no significance; thus only the resistance is considered. However, many comprehensive specifications employ the term "impedance" rather than "resistance" for completeness.

It is generally desirable that the output impedance be low, not more than a few ohms. This is important because any subsequent loading effects by cables or the signal conditioning should not affect the transducer data. Additionally, low output impedance is generally less sensitive to many types of electrical interference.

Low output impedance does not necessarily mean that a large power may be taken from the transducer, and the load current is generally limited to around 100 mA and often much less. This is adequate for connection to the normal form of signal conditioning which will generally have a high input impedance, perhaps in the region of 1 megaohm.

The term "matching" is often used when connecting the transducer to subsequent circuitry. In the true sense, this would mean a power match, but for data systems this more usually means the maximum transfer of voltage data, i.e., a low impedance passing data into a high impedance. There are, however, occasions when a

specific matching is quoted, usually in order to achieve maximum data linearity, for example, in some inductive transducers.

5.4.2 Bandwidth and phase relationships

Some discussion regarding bandwidth appears under Bandwidth and the use of filters, Section 5.3.3, but further to this it must be stated that the bandwidth of all elements of the measuring channel, excepting the signal conditioning filter, should be at least as broad as the bandwidth of the transducer (with its in-built, output filter, if one is used). Similarly the transducer itself must be capable of responding to all frequencies of the required measurement.

As with all frequency selective systems (including filters), there is a frequency phase relationship between the measurand input and the data output. In the majority of cases the transducer produces a phase lag between input and output, which increases with frequency, and generally the characteristic is that of either a simple lag or a second order system. However, there may be cases of phase lead, but this is rare and generally limited to transducers which are low frequency limited.

As a general rule, the transducer should be capable of performing well beyond the required frequency range and the overall system frequency response should then be accurately tailored by a well defined and stable signal conditioning filter. This approach provides a well-defined frequency response irrespective of any changes which may occur within the transducer, particularly with respect to temperature.

It should be noted that not all transducers are solely upper frequency limited; some, typically piezo-electric devices, are also limited at low frequency, and therefore both high-pass and low-pass filter elements are necessary in these cases.

5.4.3 Ground connection

As discussed in Chapter 9, it is important to maintain a single point grounding system in order to reduce the possibilities of interference injection from ground loops and other sources.

Many transducers designed for flight test have a floating data output, so that the grounding connections may be made at the most suitable point in the circuit. Many other transducers, however, have one of the data output terminals connected to either the power ground or to the transducer case and thus onto the aircraft structure upon which it is mounted. In such cases special measures are required, usually as part of the signal conditioning circuitry.

5.4.4 Output data formats

The data format or form generally expresses the type of data produced by the transducer, i.e., analogue, digital, frequency, and so on. This was introduced in Section 5.2.3, but to this must be added the general information on the data levels and impedance.

The ultimate data requirements and the associated signal conditioning often leads to a decision for a particular transducer or principle. For example, a resistive transducer principle would require only relatively simple dc polarisation and signal conditioning, and would produce straight-forward dc analogue data. This may be the most simple and cheap approach, but also may be the most prone to error and noise problems. Conversely, frequency modulation (FM) is much more satisfactory for transmission and may be efficiently digitised, but this requirement would demand a transducer with some form of resonant or other frequency generating principle. Rotary speed is another good example where either a dc tacho may be used providing straight-forward dc analogue, but with possibly not better than 1 percent accuracy, or a pulse tacho may be used, requiring more complex signal conditioning, but producing frequency and with a potential accuracy in the order of 0.001 percent.

As discussed in Section 5.2.3, Output characteristics and Section 5.7.2, Electrical principles available, the output data form is largely determined by the elements used in the latter sections of the transducer and these are frequently in the form of a displacement transducer. The data forms obtained from the various principles range from the straight-forward dc analogue to the fully bus compatible digital data stream. However, in

order to understand the performance of a given transducer, it is worth understanding the salient features of the different data forms, as follows:

(a) dc Analogue – This is the directly coupled voltage or current analogue typically obtained from either passive resistive transducers polarised by dc, or from active generators such as thermocouples, piezo, or electro-magnetic generators with commutator/brush or rectifier systems. This may be considered the most straight-forward data form, but the most susceptible to noise and other forms of error.

As previously stated, most A-D converters and analogue data recorders require a dc analogue voltage input, and therefore for simple requirements, transducers in this class may be preferable. However, the disadvantages of amplitude error, noise sensitivity, and so on, often preclude this.

(b) Amplitude Modulation (AM) – Typically obtained from either the passive inductive or capacitive transducers when polarised from an ac source, or from ac electro-magnetic generators such as tachos. Because AM is an analogue amplitude method similar to dc, the data suffers similar error problems, but may be more immune to noise and drift. The data must be associated with some form of sychronous demodulator system if polarity is to be recognised.

(c) Frequency Modulation (FM) – This is probably the most desirable of the analogue data forms because of the relative immunity to noise, error free properties of transmission, and the compatibility with accurate and efficient analogue to digital (A-D) conversion.

Many transducing principles may be designed to produce frequency data, often by including a mechanically resonant element as part of data generating system. Examples of this include

- Pressure or temperature transducers where the natural frequency (*fn*) of an element such as quartz is changed by the parameter.
- Pressure or density transducers where the *fn* of a cylinder is changed.
- Ice detection probes, which change *fn* as ice forms upon a resonant stub.
- Resonant strain-gauge wires, either as part of a transducer or as a direct structure measuring device, the latter is particularly used in the civil engineering industry.

To these may be added the direct frequency generating principles such as, pulse tachos, turbine flowmeters, and encoders, also Doppler and laser techniques used for displacement, flow measurement, and in the laser ring gyro.

A number of packaged transducers are available, where electronic functions are included which may produce FM data from the transducer elements. This has been particularly used with transducers using capacitive elements, where the capacitance becomes part of a timing or tuned circuit.

Because of the desirable nature of FM data, transducers producing FM may often be considered in preference to other types and development continues, particularly around piezo and optical principles. However, it must be stressed here that these frequency methods are frequency analogue, and the data does not become truly digital until it has been quantised by an A-D conversion.

(d) PCM Analogue – Typical of these are PAM, PWM, PPM, and FSK. In terms of data systems these methods have been used extensively in the past, but have generally been superceded by digital techniques. They do survive, however, as a result of a number of measurement processes, for example, event counting/timing, radiation monitoring, control/servo techniques and certain navigation techniques. Pulse amplitude modulation (PAM) occurs frequently, either as a result of sampling for multiplexing (MUX) or as part of an A-D process. Also, there are occasions when power saving is required; for example, a small strain gauge may self-heat to extreme if polarised by a continuous dc, but would be satisfactory if pulse polarised, thus producing PAM.

(e) PCM Digital - This refers to the specific form of data where the analogue measurement or data has been sampled, quantised (samples expressed numerically), and the data finally expressed in the form of an electrical pulse code, usually in binary. The only way in which this may be produced physically,

mechanically, or as a direct part of a transducer, is to use some form of encoding element such as an encoding disc or grating. By this method the analogue measurement may be converted into a digital representation.

5.5 TRANSDUCER CONSTRUCTION

The traditional concept of transducer design is to assemble the sensor and electrical transducing elements into a suitable package, but to exclude all balance circuitry and electronics. However, developments of the past two decades or so now allow a great variety of options, ranging from the traditional designs through to the total data acquisition units.

Clearly, different package arrangements are required for the different measurement situations, both in terms of the mechanical construction and the electrical performance; this is discussed below.

5.5.1 Integrated transducers

There are two aspects of this: firstly, where the physical elements of the transducer are integrated, notably here are the pressure transducers with integrated silicon diaphragm and strain-gauge assemblies; secondly, where the transducer and the electronic functions, such as signal conditioning and filters, are integrated into one package.

5.5.2 Integrated package devices

These may range from the simple package containing the basic transducer plus the balance circuitry through to the full electronic package containing the signal conditioning and power supplies. More recently, digital and fully intelligent transducers have become available containing micro-processors.

Integrated package transducers have for many years included the force balance/servo controlled transducers and the integrated package piezo transducers. The latter frequently are arranged so that the data and power supplies share just one pair of conductors, usually on a constant current/data voltage basis, and sometimes designed to meet the industrial 4-20 mA standards.

This general area of integrated package technology would seem the most likely to see major developments in digital transducer construction and already encompasses a wide range of avionics packages capable of being bus controlled. It should be realised, however, that the more intense the integration in a given package, the greater the cost. Additionally, these units may be unrepairable, and therefore, in the many circumstances where the transducer is subject to hazard, it is still a better option to go to the traditional form of construction.

5.5.3 Micro-techniques

Micro-transducers are generally recognised as being the very small devices associated with, for example, the medical field. These are often constructed on an integrated circuit basis. This technology is also used in the aero industry, particularly for pressure and temperature measurement, where small sensors may be embedded in an aerodynamic surface or an engine component.

5.5.4 Integrated circuit techniques

Integrated circuit semi-conductor techniques are becoming more common in transducer design. They are frequently based upon silicon and the various derivatives and have been particularly developed in the pressure transducer field where a silicon diaphragm is formed as the sensor complete with integrated silicon strain gauges. Further integration allows the inclusion of the immediate circuitry for amplification, error correction, and temperature compensation. These developments have led on to the multi-port transducers, where typically, 32 or so pressure measuring elements are integrated into a single package complete with signal conditioning and digital circuitry to provide a fully controllable digital data acquisition system. These transducers generally supercede the mechanical multi-port pressure scanning systems used extensively in wind tunnel and other aerodynamic work.

Other areas of development include temperature sensing, opto electronic devices, and strain-gauge beams for accelerometers, etc.

A particular feature of semi-conductor devices is that they may be manufactured under precise control, thus providing precise matching between similar elements. Also, their small physical size frequently allows good correction against environmental situations such as temperature and vibration. Manufacturers are actively working in this area, and important developments are expected both with regard to performance and physical size and to the integration of complete digital packages.

5.5.5 Digital transducers

Virtually all transducers currently available are based upon analogue principles and contain no digital or micro processor function. From previous discussion, it may be said that there is no such device as a truly digital transducer, and the only exceptions which may be considered as such are the shaft encoder instruments. However, these are in essence A-D convertors in their own right. All other devices such as the special avionics instruments, including encoding altimeters and air speed indicators, are packaged units containing the sensor/transducing system packaged with signal conditioning and A-D conversion.

Intelligent transducer systems are the specialised instruments used for avionics and industrial control, where a micro-processor is included which allows software control of the general function of the instrument and data, both of which may be communicated over a bus system.

5.5.6 The micro-processor and bus control

The main influence of the computer on transducers is during manufacture, where the elements may be precisely controlled, laser trimmed and matched. Also, detailed data logging may be achieved, providing a comprehensive specification. Ultimately, a digital memory may be produced which may be applied during the signal conditioning or analysis stages for precise correction of transducer error.

To enable a transducer to become adaptive, or be connected and controlled via a bus system, it must be made intelligent; that is, it must be capable of responding to addresses, requests, and so on. The only way that this may be achieved at present is to include a micro-processor within the package.

There are a number of flight systems in use where the measurement package is intelligent, but apart from the proprietary avionics packages, they are usually a specific development and generally built as a one-off, in-house project. One particular hardware advantage of this is a marked reduction in the copper cable requirement; up to 80% is quoted.

5.5.7 Closed-looped transducers

This is a very important class of transducer, because it is capable of very good performance and accuracy and often provides a means of electronic control of the transducer performance, leading to software control in some circumstances.

In closed-loop transducers also referred to as feedback transducers or servo transducers, a portion of the output is returned to the input either electrically or mechanically. This feedback signal opposes the input signal and is therefore called "negative feedback." The effect of the feedback loop is to increase the accuracy of the transducer over that of comparable open-loop transducers, and in many cases, accuracies of 0.1 percent of full scale, or better, may be achieved. Such accuracies are often required in flight testing, for instance pressure transducers for measuring altitude; accelerometers for measuring aircraft motions; or for precision position control, for example, gyro systems. Two types of closed-loop transducer are used in flight testing, viz. force-balance transducers and closed-loop position transducers.

5.5.7.1 Force-balance transducers

The majority of the closed-loop transducers used in flight testing are force balance types. The basic principle may be applied to almost any measurement, but because accelerometers are used extensively, a brief description of this type of transucer is given.

Figure 5.2 illustrates the principle, although in practice, the mechanical layout may be different. The physical input, acceleration, exerts a force on a sensing element, i.e., a mass. In an open-loop transducer, this force would be balanced by a spring and the deflection of the sensing element would be measured. In a closed-loop

transducer an electrical signal from the displacement detector is sent via an amplifier to an electrical force generator which repositions the sensing element. The current required to drive the repositioning device to equilibrium is a measure of the physical input quantity and is the output of the transducer. The current may then be converted into a voltage by means of a precision resistance. Although a finite deflection of the sensing element is required in order to obtain an output from the displacement detector, this deflection is very much smaller than for equivalent open-loop transducers, and provided the loop gain is high, it may be considered as zero for all practical purposes.

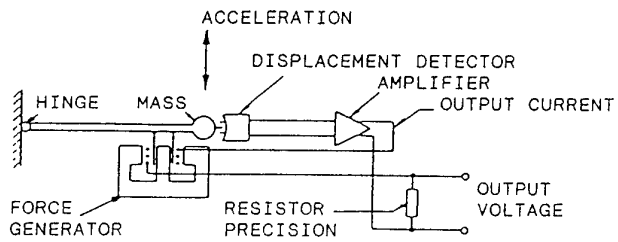

Figure 5.2. Force-balance acceleration transducer.

These basic principles may be applied to virtually any transducing system where the sensor produces displacement. Also, similar principles may be applied to the hot-wire anemometer (Section 5.9.4), where under open loop conditions a fine wire is heated by an electrical current and the flow of a gas or liquid is sensed by the cooling effect. These cooling effects are subject to secondary errors, such as heating and cooling of the support posts, but by placing the hot-wire into a servo loop such that the wire is kept at constant temperature by a feedback current change, these and other errors are reduced and the dynamic performance is increased.

Thus the force balance technique may be used for almost any measurement, but in practice it has found particular use for accelerometers, pressure transducers, rate gyros, and hot-wire anemometers.

5.5.7.2 Closed-loop position transducers

In closed-loop position transducers the physical input is not a force but a displacement. In these instruments the servo amplifer is used to reposition the displacement detector until its output is zero. A prime example of position servos is the synchro family, described in Section 5.8.4, where the system is used for control synchros (Fig. 5.11). Similar servo systems are used in some closed-loop pressure transducers, bridge balance circuits, and analogue computer functions.

5.5.7.3 Performance of closed-loop transducers

The advantages of closed-loop transducers may be summarized as follows:

- Environmental factors have much less effect on the accuracy because of the null-seeking process. For example, the resistances of inter-connecting leads between synchros becomes less significant because at balance, no current flows.
- The sensing element travels only a minute distance before equilibrium is attained. Therefore, cross-axis sensitivity is much less than in equivalent open-loop transducers.
- The static accuracy may be much higher because friction effects are practically eliminated.
- Dynamic linearity may be increased because of the absence of friction effects and of nonlinear effects in mechanical damping devices.
- The dynamic characteristics are stable because they mainly depend on the electrical characterisitcs of the feedback loop. Also, these characteristics may be externally changed by simple electrical control such that in some cases, gain, frequency response, and damping may come under software control.

The disadvantages are mainly that they are more costly and often larger in size and weight than conventional transducers and also that overloading may cause very large errors. A characteristic which may be a disadvantage

under some circumstances is that the bandwidth is generally increased by this technique, and this may cause problems when a low-frequency signal must be measured in the presence of high-amplitude, high-frequency noise (see Section 5.3.3).

5.6 OPTICAL METHODS

The use of light for sensing and measurement, on an analogue basis, is fundamentally a very inaccurate process. This is because, firstly, it is very difficult to generate a stable light intensity, free from change due to power input or temperature change. Secondly, most light sensors lack stability particularly with respect to temperature.

Optical methods do, however, have the advantages of no physical loading and large magnification factors, i.e., the optical arms of galvos and lens systems. Thus there is an extensive usage in photographic recording and visual techniques, for example, the cine-theodolight.

For measurement, optical methods are generally related to digitising techniques where there is a simple on/off requirement and the absolute light value is not critical; this includes the variety of optical grating methods.

In situations where light is being used for analogue measurement, it is generally essential that it is performed on a parallel path process where the measurement path is related to a reference path such that changes in light level equally affects both paths; thus the final quantitive value may be derived on a ratio basis.

5.6.1 Optical sensors

For many years, optics have been used for tasks such as batch counting, tacho pick-offs (phonic wheels) and in tape recorders for end of tape sensors, etc.

Recent developments of optical sonsors have included the measurement of displacement, acceleration, pressure/density, and temperature, most of which have been initially aimed at the industrial control market. However, together with the ring laser gyro (RLG or LRG) many are now becoming established in the aerospace industry and advances are being made in all other fields.

They all depend upon the modification of light transmission by the measureand, within some form of light conductive element, usually connected by fibre optics. The light modulation ranges from a direct analogue intensity modulation, to frequency modulation, and to digital encoding techniques.

5.6.2 Fibre optics, sensors, and data transmission

Optical transmission of data is established as a safe and interference-free technique both within fibre optic cables and in free space as a means of telemetry. Thus, the extension to optical measurement extends the advantages, particularly in regions of high electrical or magnetic field.

The fibre-optic itself may be used as a sensor, in particular where the measurand may create a physical distortion and thus change the light path. One particular use of this is where the fibres may be included as part of a structure material and thus be used as a sensor of structural failure.

5.6.3 Laser methods

Lasers produce a coherent source of light and thus may be used as a very powerful means of displacement measurement. In addition to the various surveillance systems, these principles may be used for velocity, flow, and non-contacting vibration measurement.

5.6.4 Ring laser gyro (RLG)

The performance of these is similar to the rate gyro, although they do not in any way depend upon gyroscopic principles and there are fundamentally no moving parts; although in practice it is often necessary to have such functions as dither and correction mechanisms (Fig. 5.3).

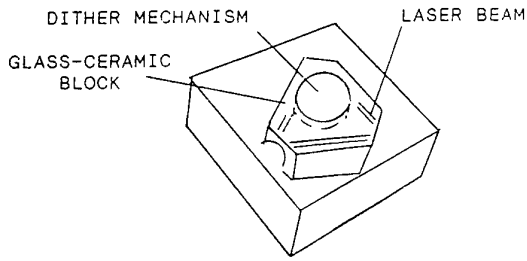

Figure 5.3. The basic concepts of the laser ring gyro (LRG).

The principle depends upon the guidance of two beams of laser light around an optical circle, or loop (often triangular). The beams travel in opposite directions, and thus when the loop is rotated in space, one beam has a slightly longer transition time than the other, and by mixing these beams in a detector, a difference frequency may be generated which is directly related to the rate of rotation of the loop.

Compared with rate gyros, there is the advantage of no moving parts, and also, the data is in frequency form, this would be typically 65 kHz/Rad/sec for an RLG with a loop length of 21.3 cm and with a helium-neon laser of wavelength = 633 nm.

5.6.5 Optical gratings and scales

The optical grating is a very effective way of producing a measurement scale, where lines or patterns may be placed on a stable glass and used in conjunction with a light transmission system. The scaling may be extremely accurate, into the micro-metre region, and also, patterns may be generated such that an analogue to digital encoding process may be performed. The encoded pattern may be upon a disc and mounted upon a shaft, thus producing the basis of a shaft encoder, or it may be in a linear form. The simple pattern will simply produce an on/off light transmission sequence which may be used either for displacement measurement, or as a means of velocity measurement by counting the frequency of the light transmissions. A disadvantage of using this method for displacement is that there is no absolute reference and all displacements must be measured relative to some arbitrary starting point on the encoder. Thus, to overcome this, more complex patterns are generated, such that for any given position there is a unique set of patterns which describes that position. Most commonly, this unique set of patterns will form a digital code and typically, a cyclic code, such as the Gray Code.

5.6.6 Encoders

Many types of digital transducers employ a shaft-position encoder as shown in Figure 5.4. Encoders may be grouped into two major categories, viz. the brush and the brushless types.

Figure 5.4 shows a brush-type encoder for simplicity, although in practice this type is rather sensitive to vibration and other errors, and therefore brushless techniques are normally employed, frequently using optical methods, or in some cases inductive or capacitive methods.

In the figure, the disk is composed of a number of conductive and nonconductive areas on several concentric rings, one ring for each bit in the output. The conductive areas are all connected to an electrical source, and a digital 1 is produced for a contact and a 0 for no contact, and thus each angular position is represented by a discrete digital code. Clearly, incremental error, i.e., quantisation error, occurs; this depends upon the angular spacing between the segments. To reduce this, multi-stage encoders are constructed, where a number of disks are geared together to increase the effective digital word length. Also, the cyclic codes are designed so that only a one bit change occurs at each increment, so that confusion/indecision is reduced.

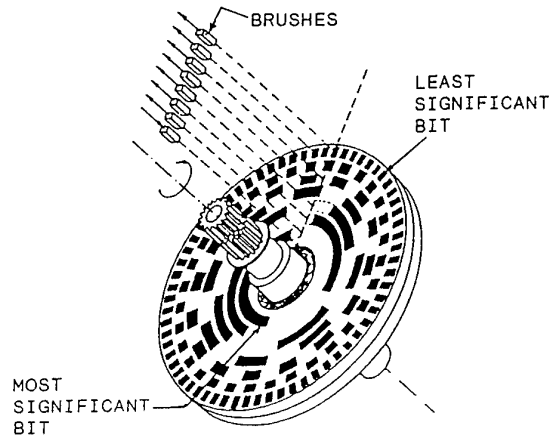

Figure 5.4. Seven-bit brush-type digital shaft/position encoder.

5.7 TRANSDUCER APPLICATIONS

The following sections will endeavour to provide a brief guide towards the selection of the appropriate transducer for a given parameter. Before discussing actual applications, it is necessary to provide some detail on parameter relationships, definitions, and related electrical principles.

5.7.1 Mathematical relationships

Displacement, velocity, and acceleration are mathematically linked, and it is common practice to derive one from the other by performing the functions of differentiation or integration by electronic means. Thus displacement signals may be differentiated to give velocity and then acceleration; similarly, acceleration may be integrated to velocity or displacement. An example of the use of this is in a cg pack used for measuring an aircraft movement/displacement in flight, where, because of the necessity to use inertial techniques the measurements are limited to linear acceleration (accelerometers) and angular velocity (rate gyros). Data on the other parameters may be electronically calculated; this is the basis of an inertial navigation (IN) system.

5.7.2 Electrical principles available

In order to transduce from the physical parameters to electrical data, one of the following electrical principles must be applied. In order to understand the relevance to the final data utput more fully, reference should be made to Output data formats, Section 5.4.4 and also Signal Conditioning, Chapter 6.

The first four principles may be regarded as passive properties; that is, the electrical change is not detectable unless a polarising voltage or current is placed across the element.

(a) Resistance R. This obeys Ohms Law and may be polarised by either dc or ac. This principle may be used on a ratio basis, as with the potentiometer, or on a straight-forward resistive basis, as with the resistance temperature detector (RTD). In most cases, resistive elements are associated with some form of Wheatstone's Bridge (see also Section 5.13.1).

(b) Piezo-Resistance. This is the term generally given to the conductivity change exhibited by semi-conductor materials, typically silicon, when physically distorted. This is a different phenomenon to the change in straight-forward resistance found in metallic conductors and generally shows a much greater change of conductivity with respect to strain. This property is used extensively in semi-conductor strain gauges which give a much higher sensitivity than the metallic gauges; however, they are also very temperature sensitive. Electrically this is generally treated in the same manner as resistance (a) above. Note, piezo-resistance must not be confused with the piezo-electric effect discussed in (f) in the following.

(c) Inductance L. This is essentially an electro-magnetic process involving current carrying wires and magnetic material. Because inductive reactance is only apparent when there is a changing magnetic flux, it is essential that the polarisingvoltage/currents are ac. Most inductive displacement transducers are based upon transformer principles where the coupling between windings is modified by displacement. As with resistance the method may employ either ratio or a single element change, and the associated circuitry is normally in some form of bridge.

(d) Capacitance C. This depends upon electro-static fields and the electrical charge carrying capacity between two conductive plates. The electrical requirement is similar to inductance in the necessity for ac polarisation and bridge circuitry, although in many circumstances resonant circuits are employed. Capacitance may be insulant changed by the variation of platearea (over-lap), the distance between the plates, or the property of the between the plates (the dielectric). All three methods are utilised in various ways to measure displacement and because of the complete lack of physical contact and the basic simplicity of the plate arrangement, high accuracy and high finesse are possible. However, the dielectric may be very sensitive to change due to the ingress of moisture, dirt, or oil, so that extreme cleanliness must be maintained.

The next three may be considered as active elements; that is, the element self-generates electrical energy in response to the parameter.

(e) Electro-magnetic (EM) Generators. These differ from EM displacement devices in that the magnetic element; is replaced by a magnetised element; thus movement of the magnet with respect to the coils causes electrical generation, this being the basis of many speed measuring transducers. This method, and optics, are very popular ways of obtaining frequency from moving objects, either to provide a near sine-wave, or a pulse output. The normal process is to signal condition the waveform into a constant amplitude, variable frequency pulse train which may then be used in either analogue form (discriminated), or counted into digital form.

(f) Piezo-Electric Effect. Many materials show this effect, notably the natural element quartz, but also many man-made crystals. The principle is that any physical distortion of the crystal will create a generation of electrical charge within the crystal, this may be detected as a voltage across the surfaces of the crystal, although it is usually preferable to detect the charge using a charge converter/amplifier. This principle must not be confused with piezo-resistance, discussed previously in (b).

(g) Seebeck Effect. This simple effect is created when two metallic conductors of differing alloy are brought into contact. A potential is created between them which is directly related to the temperature of that junction. The hot junction must be related to a cold junction in order to create a complete thermocouple and provide temperature data.

The following may be considered as interactive effects. There are many that may come under this classification, but the most significant is given.

(h) Optics. The usual method is to direct the light energy onto a photo-sensitive cell which then provides electrical change. The cells are normally semi-conductor and are either photo resistive which produce a conductivity change with respect to light, or photo-voltaic, where an electrical energy is produced. The cells may be single cell diode elements, or multiple cell arrays producing a television type of image. Many pulse generating systems utilise optical techniques, as well as a number of analogue applications, in particular the measurement of temperature and IR imaging.

5.8 DISPLACEMENT MEASUREMENT

Displacement may be considered as the primary measurement, firstly, because it may be either a discrete measurement, or it may be part of a transducer. Secondly, it is the most frequent method of transducing from mechanical to electrical data. Because of these and the mathematical relationships (Section 5.7.1) it is logical to consider displacement firstly, and in some detail, and then to follow with the other parameters.

5.8.1 Direct and inertial measurements

Before discussing the transducers in detail, it is necessary to more clearly define displacement. There is a fundamental difference between the direct methods used for small distances and the inertial methods used for the larger distances, in particular in the areas of navigation.

A direct measurement is one where an attachment may be made to both the fixed and moving parts. This is satisfactory for relatively small displacements, possibly up to about 1 metre, such as may be required about the aircraft structure. However, when it is necessary to measure the much larger distances found in navigation, it is impossible to make a direct attachment and inertial methods are necessary.

For linear inertial measurement it is normal to use an accelerometer producing acceleration data which may be integrated twice to produce displacement data. For rotary movement, gyros are usually used, either the free gyro for angular displacement or the rate gyro for angular velocity.

Vibration and shock is frequently measured by inertial means using accelerometers, because, although displacements may be small, it is invariably impossible to establish a known fixed reference. By the nature of vibration, the structure around the vibrating object usually absorbs some of the vibration energy and sets up vibration modes of its own. Similarly, with shock measurement, a reference is usually difficult to establish.

5.8.2 Potentiometers

The potentiometer (Fig. 5.5) is probably the most basic of displacement transducers, where a voltage is placed across a resistive element and a moving wiper contact picks off a part of this voltage in proportion to displacement.

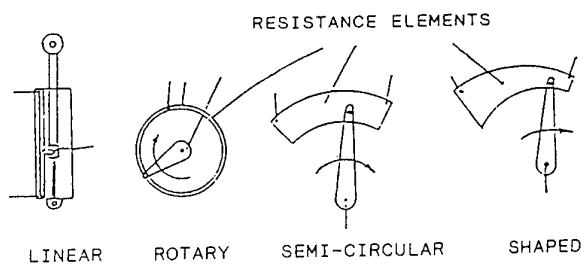

Figure 5.5. Some basic potentiometer layouts.

This a simple and economic method which is widely used, but has a number of disadvantages, particularly for long term use. Because of the rubbing contact, there is friction, stiction, and always the possibility of poor contact because of dirt and vibration; all these degrade the accuracy and can produce noise (unwanted signals). Additionally, in a permanent installation, wear becomes a problem, which would mean replacement and recalibration. Because of these disadvantages, alternative methods are often sought, in particular, inductive transducers.

Potentiometers have been progressively developed, and various conductive plastic film and film/wire techniques are available which provide greater resolution than the original wire-wound elements, whilst still retaining the good linearity. Some, however, do show some nonlinearity error near to the connections. All types may be shaped to provide a nonlinear law, for example, a transducer square-law may be inverted to provide a linear parameter to data relationship.

Potentiometers find extensive use in instrumentation, both as an integral part of a transducer and as a discrete displacement measuring instrument, particularly for the larger measurements. In angular measurement they allow virtually a full 360° of movement.

Another form of potentiometer is found in the dessyn system, discussed later in Section 5.8.4.1.

5.8.3 Inductive displacement transducers

These work on electro-magnetic principles in a similar manner to the electrical transformer (ref. Section 5.7.2(c)). Mechanically and magnetically there are many configurations including the E and I pick-off, the rotary (angular) pick-off, and the linear LVDTs (Figs. 5.6, 5.7, and 5.8).

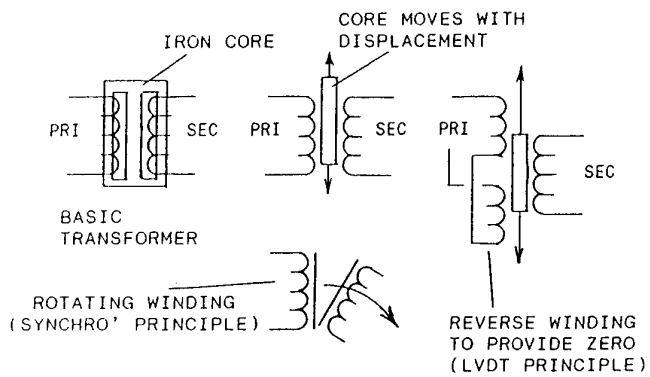

Figure 5.6. How the basic transformer may be modified to measure displacement.

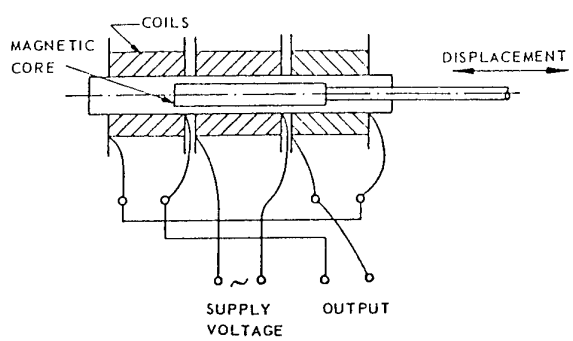

Figure 5.7. Linear variable differential transformer (LVDT).

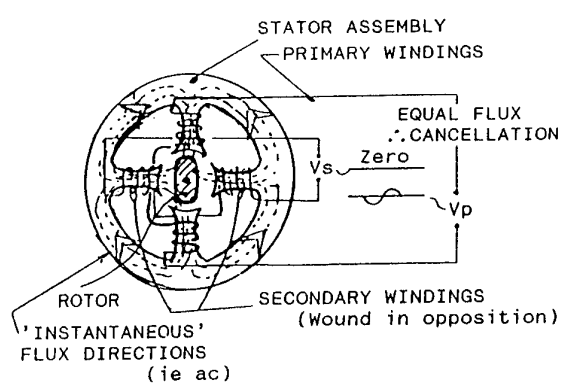

Figure 5.8. The rotory (angular) pick-off.

The windings are frequently arranged so that there is zero secondary output at balance, and the output increases linearly with displacement of a magnetic (not magnetised) slug; the direction being indicated by the electrical, input to output phase relationships.

Inductive transducers frequently take the physical form of a potentiometer, although the electrical aspects are obviously very different. One of the major factors which may make this type of tranducer so rugged and relable is the fact that often the only moving parts are simple magnetic components with no electrical connections.

The measurement range might typically be from a few micro-metres or a few min's of arc for the most sensitive instruments, to 1 metre or so. However, rotary movement is usually limited to ±45°.

5.8.4 Synchros

The traditional designs of synchro were for transmitting angular data, i.e., that two shafts may be synchronised in angular position; this was one of the original positional force balance developments.

The basic synchro has similarities to the angular pick-off except that it has windings on both the rotor and stator assemblies; this allows a full 360° of measurement, which is not possible with the pick-off. Also, the data is produced in ratio form which, because of this, the absolute amplitude of the data is of secondary importance and thus polarisation amplitude changes or transmission losses are less significant; all of which considerably enhances the over-all accuracy.

The synchro is a much more precise, expensive, and delicate a device, is more applicable to the requirements of control systems or avionics, and has been developed into many variations, including linear versions. However, most are for rotary movement, where accuracies to sec's of arc are possible.

5.8.4.1 Dessyns

The dc synchronous systems or dessyns were the fore-runners of the synchro and were based upon a two wiper rotary potentiometer principle and dc supplies (Fig. 5.9).

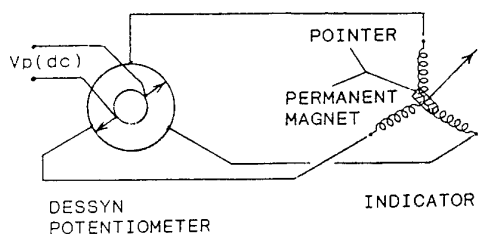

Figure 5.9 The dessyn system.

The dc supply was applied to the two wipers, and the data output produced from three tappings placed at 120 mechanical degrees on the resistive potentiometer track. The resulting dc ratio data was normally connected to a visual pointer instrument, based on magnetic principles; and thus the angular position of the dessyn transmitter was directly repeated by the receiving instrument. Dessyns were usually used to transmit angular data from various areas of the aircraft to the cockpit instrumentation.

5.8.4.2 Synchro torque transmitter/receivers (TX/TR)

The original design for synchros was to replace the dessyn and to transmit angular position. This is still used as a control function or as a means of transmitting to cabin instruments; however, the electrical output is generally more valuable for instrumentation. The transmitter is conventionally given the symbol TX and the receiver RX, and in basic principle there is no difference between the two instruments; the two shaft positions would normally be synchronised in angular position. The electrical data is in the form of a ratio of three voltages, whose amplitude and phase relationship with respect to the polarising voltage is unique to every given shaft position. Since synchros are extensively used in avionics and control, it is often convenient to tap into the electrical data for measurement purposes, Figure 5.10. There are many products available to convert

synchro data to either analogue or digital data and because of the inherent accuracy of the synchro principle, data to at least 16 bit accuracy is possible.

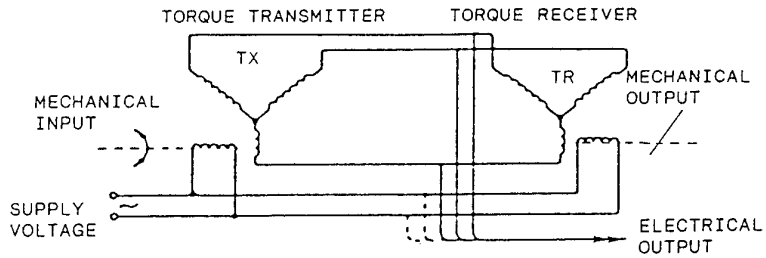

Figure 5.10 Torque synchro circuit.

There are two general classes of synchro, viz, the torque type and the control type. In torque synchro circuits (Fig. 5.10) the rotors of the torque transmitter (TX) and the torque receiver (RX) are both connected to the ac supply voltage (in aircraft applications, usually 26 or 115 volt, 400 Hz). If the two rotors are not aligned, the induced voltages are such that a current will flow in the stator circuit which will create a magnetic torque in the receiver rotor in order to correct its position. The positioning accuracy of the receiver under static conditions is about 0.25° (i.e., better than 0.1 percent of the 360° full scale value), and because it is a force balance principle, no current flows in the wires to the stators at balance (i.e., synchronism), and therefore the resistance of these wires is of secondary importance at balance. However, due to the relatively low power, the slip-ring friction and large inertia of the torque receiver rotor, the frequency response is rather poor. An electrical measurement of the transmitter position may be obtained by tapping the stator wires using high-impedance circuits; in some signal conditioners, the rotor voltage is also required as a reference.

5.8.4.3 Control synchro transmitter/transformers (CX/CT)

In control synchro circuits (Fig. 5.11) only the rotor of the control transmitter (CX) is connected to the supply voltage. Currents in the stator circuit induce a voltage in the rotor of a control transformer (CT), which is then amplified and fed to a servo motor which drives the control transformer rotor to its correct position.

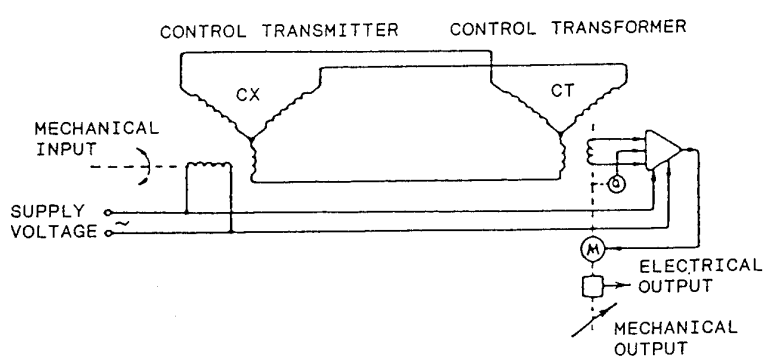

Figure 5.11. Control synchro circuit.

The accuracy of the alignment of the rotor may be of the order of 0.05°, and the dynamic response may be much better than for torque synchros. The output of the synchro chain is, as with torque synchros, a shaft position and if an electrical output is required, this may be taken from the stator wires as in Figure 5.10. It is, however, often better and more accurate to mount an electrical transducer (e.g., a potentiometer or a digital shaft encoder) on the axis of the servo motor and to use the output of this transducer.

5.8.4.4 Other synchro types (CDX, RX/RC)

A number of special synchro types have been developed; the more significant ones are as follows:

- Differential synchros (CDX). These are control transmitters which have a three-winding rotor as well as a three-winding stator. The rotor is connected to the stator of a normal control transmitter. The control transformer connected to the stator will then be positioned to indicate the sum or the difference of the angular positions of the shafts of control transmitter and of the differential transmitter.
- Brushless synchros. In these synchros the excitation of the rotor is achieved by inductive means, rather than by sliding contacts. This provides a modest improvementin both accuracy and dynamic response.
- Synchros with fixed rotors ("Synchrotel"). In these synchros the rotor winding does not move, but is wound on the same core as the stator windings. The coupling between the rotor winding and the stator is windings is controlled by the rotation of a small and low mass moving piece of metal. As this coupling is much less efficient, they require more supply power and are usually excited by 115 volts, 400 Hz. The inertia and the friction of the rotor may be made so low that these synchros may be used in sensitive altimeters and similar instruments to provide an electrical connection to a control transformer.
- Resolvers or synchro resolvers (RX/RC). These are similar to synchros, but, have only two stator coils, which produce ac voltages proportional to the sine and cosine of the angular position of the rotor. The stator voltages may be tapped in the same way as for synchros; they are used in many inertial platforms and occasionally in flight testing.
- Slab synchros. The principles are essentially the same except that the physical construction provides a much greater diameter for the rotor/stator assembly and thus may provide even greater accuracy and resolution; down to seconds-of-arc are possible.
- Linear instruments. A number of the principles described above have been produced in linear form.

5.8.5 Capacitive displacement transducers

A capacitance is formed when two conductive plates are placed together and they have the ability to store to store electrical charge (Section 5.7.2(d)). The amount of stored charge depends upon the area, the spacing, and the material between the plates (the dielectric); thus any one of these may be changed to give an electrical change with respect to displacement. This principle is very simple to use mechanically, although it is not so easy to contend with electrically; however it has the particular advantage of minimal loading upon the measurement (i.e., good finesse). For example, a capsule instrument such as an altimeter or a barometer is relatively fragile, and any load applied would reduce the accuracy, but a capacitive pick-off (PO) may be simply applied in the form of a single plate, using the metallic surface of the capsule as the second plate. A number of precision altitude and airspeed transducers of this class are available, but the use of capacitance as a means of direct displacement measurement is generally limited to situations requiring high precision and given clean conditions (Fig. 5.12).

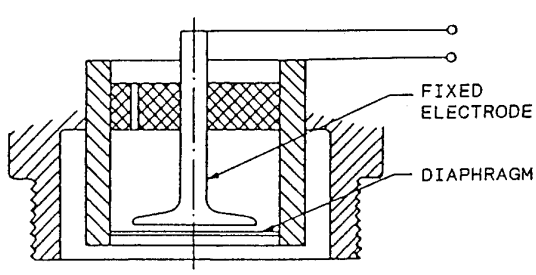

Figure 5.12. Capacitive pressure transducer.

5.8.5.1 Fuel level

An important use of the capacitive principle is the measurement of fuel level. In most aircraft it is not sufficient to use the float type of instrument because of possible unreliability, inaccuracy, and often, the multiple and irregularly shaped tank installations.

The principle is to use the dielectric change to give an indication of fuel level. The transducer may consist simply of two rods or concentric tubes (Fig. 5.13) placed close together and down into the tank, and as the fuel covers these components, there is a change of dielectric and hence capacitance which may then be signal conditioned to provide data on fuel level. The probes may be shaped to compensate for tank shape and there may be a number of probes in each tank.

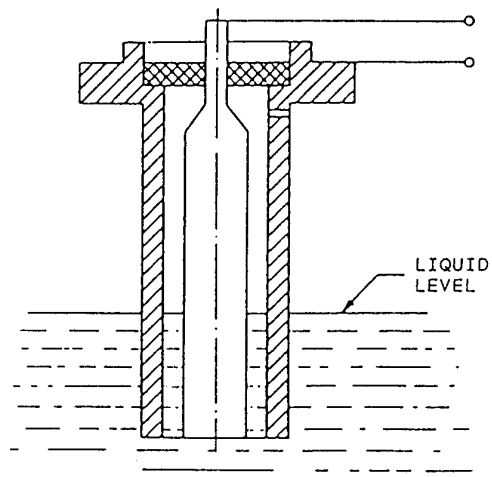

Figure 5.13. Capacitive fuel level transducer.

5.8.6 The piezo-electric principle

As discussed in Section 5.7.2(f), certain materials have the property of generating a voltage across their surfaces when they are physically distorted. Thus if a conductive coating (often a silver plating process) is placed upon two opposite surfaces, conductors may be connected to sense these voltages. The materials may be natural (i.e., quartz) or man-made, and they are produced in many shapes and sizes and for a variety of distortions, i.e., twist, bend, or compress.

Although the principle is fundamentally a displacement in the sense of the material distortion, it is unusual to use the method for the direct measurement of displacement. It is, however, frequently used as a means of measuring force, and in particular as part of a transducer. Because the principle is basically that of measuring a charge across a capacitor, the signal conditioning should theoretically have infinite impedance in order to measure down to steady-state (dc). In practice this is not possible, and the minimum frequency is typically about 2 Hz, or down to about 0.1 Hz with special precautions. This is one area where the integrated package type of construction excells.

It is generally not possible to damp piezo-electric transducers, and the damping ratio is frequently in the region of 0.1. However, because the high-frequency performance is usually good, many transducers having a natural frequency, *fn*, in the region of 10 to 250 kHz, there is usually no problem in working well below *fn*, often below 0.1 to 0.2 *fn*.

Hence, these principles are essentially suited to dynamic measurement and are not always applicable to aircraft performance measurement. Particular areas of application are for the measurement of vibration under harsh environment such as engine monitoring, high frequency measurement of pressure and force, and also domestically, for such applications as record player cartridges.

It may be noted here that the process is reversible such that an applied voltage will create a physical distortion. This has found many uses in micro-positioning, for example, in optical equipment or within transducers such as the RLG (Section 5.6.4) for creating dither.

5.8.7 Strain gauges (metallic)

As the name implies, this device is for measuring strain, but by using mechanical cantilevers, diaphragms, etc., it may be considered as a displacement transducer. Fundamentally the strain gauge is a piece of metallic wire held between two points. This wire will have a resistance (R) and a length (ℓ), but if the wire is stretched slightly (well within the elastic limits) the length will increase and the area will decrease. This physical change creates a resistance increase and because there are the two physical changes, the resistance change (ΔR) is approximately twice the length change ($\Delta \ell$). This is known as the gauge factor (GF), and

$$GF = 2 \text{ (approximately)}$$

for metallic materials.

The device described so far would be known as an unbonded strain gauge, and because of its fragility it would normally be confined to uses within transducer assemblies. For structural stressing applications the bonded strain gauge is normally used, where the strain-gauge wire is formed into a grid and adhered to an insulating backing material which in turn is cemented to the structure.

Many current bonded strain-gauges are constructed from foil rather than wire, (Fig. 5.14) rather like a small printed circuit. This generally provides a superior performance, in particular, to the cross-axis sensitivity, this is because of the ability to make the return curves much thicker than the main strain-gauge conductors.

It is necessary to match the strain-gauge temperature coefficient with that of the measurand material and generally three compensations are readily available, namely:

Mild steel	(12 ppm/°C)
Stainless steel	(18 ppm/°C)
Aluminium	(23 ppm/°C)

The strain gauge may be extremely sensitive, ranging from around 2000 micro-strain (0.2 percent elongation), down to around 10 micro-strain (0.001 percent) under exceptional circumstances; however, great care is required with balance circuitry and temperature effects at the low levels.

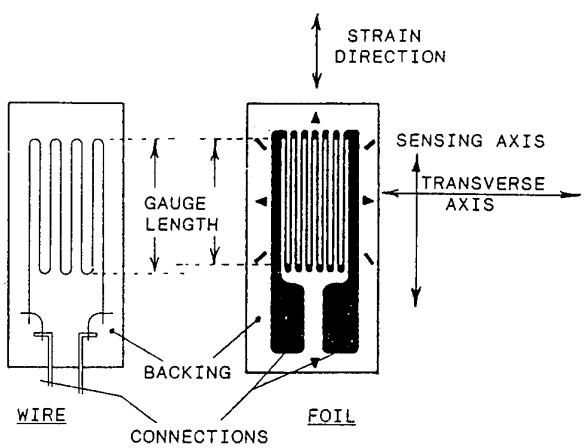

Figure 5.14. Wire and foil strain gauges.

5.8.7.1 Semi-conductor strain gauges

These are similar in practice to the metallic strain gauge, except that the conductor is normally diffused in silicon and the change of conductivity is generally termed the piezo-resistive effect. This effect must not be confused with the piezo-electric effect which is the generation of electrical charge within the body of the crystal. A number of so-called piezo transducers in fact use piezo-resistance strain-gauges and thus have the ability to perform down to dc; however, they do not have the frequency response or ruggedness of piezo-electric types.

The main reason for using silicon strain gauges is that they have a much higher gauge-factor, typically 400 in their initial form, but because they also show a very great temperature sensitivity, the silicon is usually modified (doped) to reduce the temperature sensitivity; unfortunately this also reduces the gauge-factor to around 100.

Gauges are available for structural use where the higher sensitivity and possibly small size is required and particularly for purely dynamic situations where the temperature sensitivity is of less importance. However, the temperature sensitivity and fragility limit the general use, and the main application for this type of gauge is for integral transducer construction, typically where the strain gauges are diffused within a silicon diaphragm or beam.

5.8.7.2 Resonant strain gauges

Many transducing principles use mechanical resonance as a means of producing FM data, and there is a small family of unbonded strain-gauges used for structural work, mainly in civil engineering, where a substantially constructed wire element is held in a state of tension and natural frequency oscillation. In application, changes of strain in the measurement structure are reflected by changes of frequency of the resonant strain gauge.

This basic principle is also employed in some transducers, particularly some precision pressure transducers and density transducers, where changes of pressure or density are applied to a resonant strain-gauge system.

5.8.7.3 Control column and pedal forces

Data on these are frequently obtained from strain gauged links. The pilot's stick force may be obtained directly from a calibrated pole attached to the pilot's column, or more direct surface forces may be measured by additional strain gauged links or by strain gauging the operating levers themselves. Pedal forces are similarly obtained from strain gauges on the pedal linkages.

5.8.8 Encoders

The term encoder refers broadly to a range of transducers which rely upon a mechanical scale or grating as a reference and a means of translating displacement or velocity into electrical data. The scale is frequently in the form of an optical grating, either circular, or in some linear form; this is discussed more fully in Section 5.6.

Techniques using the basic grating may be used for high-accuracy displacement or velocity measurement; or by employing gratings with more complex patterns, true digital encoders (mechanical A-D converters) may be constructed.

5.9 VELOCITY AND FLOW MEASUREMENT

A primary measurement for aircraft is airspeed, normally measured by the pitot and static systems, thus giving a pressure difference.

More broadly, velocity encompasses the measurement of linear and rotary machinery components, typically involving a whole range of tachometers, ground speed, and all the related vehicle speed measurements. To these may be added the general of fluid subject flow.

5.9.1 Pitot/static systems

These will not be discussed in detail here because there are many specialised publications on the subject. The basic concept is to measure the ram-head pressure from a tube facing into the airstream and to compare this as a difference with a static pressure. Ideally, the static pressure is the ambient pressure distant from any disturbance of the aircraft, but standard installations normally take an average of a number of static vents mounted at various quiet positions on the aircraft surface. For research, it is common to have booms extending beyond the aircraft aerodynamic disturbance, or sometimes a trailing static is towed many metres behind the aircraft.

5.9.2 Tachometers

Standard tachometers are fundamentally electro-magnetic generators which provide a linear relationship between speed and electrical output. It may be noted here that, in principle, the only difference between a displacement transducer and a tachometer is the fact that for displacement the rotor is simply a piece of magnetic material, and thus the transducer requires to be polarised, but for the tachometer, the rotor is magnetised, and thus the transducer becomes self-generating.

Typical aircraft engine tachos are ruggedly constructed and give a three-phase voltage which may be transmitted to the indicator on a ratio basis. Other types produce either ac or dc, the latter being more applicable to servo requirements. Further types give purely a frequency or pulse rate; these are more applicable to the more accurate requirements and to digital systems.

5.9.3 Measurement of flow

Basically, this may be considered as an extension to velocity measurement, and in practice many of the techniques are common.

The techniques generally group into liquid flow (fuel, coolant, etc.) and gas flow (air, etc.), although it is often possible to use the same principle for both, i.e., pitots for air/gas flow and orifice plates/pressure drop for liquid and similarly for turbine methods and anemometry principles.

5.9.3.1 Fuel and liquid flow

For engine performance measurement, the true requirement is to measure the mass flow passing into the engines, for example, the mass of fuel (i.e., Kg) being burned for a given performance. In practice the majority of flowmeters measure rate of flow (and hence volume) which is another form of velocity measurement. Hence, mass flow must be derived.

5.9.3.2 Turbine flowmeters

Many aircraft use the turbine flowmeter principle to measure fuel flow, one transducer for each engine. This type of transducer is fitted directly into the pipeline to the engine and contains a small turbine, which spins round at a speed which is in proportion to the flow rate. Because fuel density changes are not usually significant in normal service, it is satisfactory to calibrate the transducer output in terms of mass flow. Compensations for temperature or fuel changes may be built into this type of flowmeter (Fig. 5.15).

A small pick-off is placed near to the turbine vanes which produces electrical pulses in proportion to the flow rate. The normal method is to pass these pulses into an electronic circuit which provides a meter indication in the pilot's cabin. The relatively simple analogue approaches to processing these pulses only yield accuracies of a percent or so and more accurate electronic logic methods are used for test instrumentation to provide either a numeric read-out or digital data for such parameters as fuel consumed.

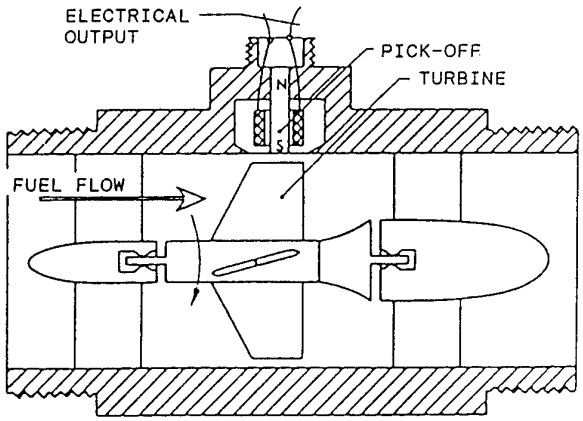

Figure 5.15. Pulse generating turbine flowmeter.

5.9.3.3 Mass flowmeters

These tend to more complex and expensive and therefore limited to installation where there is a strict requirement for mass flow measurement. The basic principle is to impart an annular velocity into the fuel as it passes through the transducer, and the torque required to achieve this annular motion is directly proportional to mass flow.

5.9.3.4 Positive displacement flowmeters

These generally apply to the fuel dispensing and consumer industries, where the transducer measures volumes of the fuel dispensed.

5.9.3.5 Area/displacement flowmeters

This is where the flow forces against a spring loaded vane or cone (rotameter) and are generally known as variable area or variable volume flowmeters, i.e., they essentially produce velocity/volume data.

5.9.3.6 Other flowmeter types

The electro-magnetic types are popular for measuring water flow, including sea water. They work on the principle of using the flowing liquid as an electrical conductor passing between the poles of a magnet. Thus as the liquid conductor cuts the magnetic flux, a voltage generation is created which is proportional to flow velocity.

Vortex types have been used extensively for wind tunnel and atmospheric measurement and also water flow measurement. The principle is that a vortex flow pattern is created over specifically shaped bodies and changes in the pattern or frequency vary with rate of flow.

Ultra-sonic methods are used for both anemometry (gas/air) and liquids. For liquid measurement, they have the particular advantage that a system may be attached to a pipe-line without any mechanical intrusion.

Laser methods are similarly used for nonintrusive flow measurement and have been developed into a very sophisticated and powerful measurement tool. They are mainly applicable to the laboratory situation and provide an effective method of studying of fluid flow and flow patterns.

5.9.4 Anemometers

Anemometers were originally developed for the measurement of wind velocity, and many devices may come under this category. These may include, cup-anemometers, pitot/static systems, vortex and ultra-sonic instruments, but one of the major instruments is the hot-wire anemometer.

The basic principle is to measure the cooling effect of a heated wire when placed into the flow. The very fine filament wire is held on supports and heated by an electrical current and thus the cooling effect of the wire may be measured by resistance change. However, this open-loop system has a number of disadvantages, including the secondary effect of heat flow in and out of the support wires, and therefore, the majority of anemomenters are force balanced (Section 5.5.7.2). This is where the temperature is kept constant and the current is varied with flow rate by a servo feedback system. These instruments are particularly used for the various aerodynamic measurements and will respond up to 100 kHz or more.

5.9.5 Flowmeter performance

As a very general statement, there are no upper limits to the measurement of flow; it is simply a matter of providing areas, pipes, etc., large enough to accommodate the flow without choking and so on. Low flow rates may produce difficulties and are often limited by the dynamic range of the instrument, often to about 10 percent or 15 percent of full scale. Generally the hot-wire anemometers, ultra-sonic, and laser methods show good performance at low rates.

High-frequency performance is usually very limited for the mechanical instruments, but again the hot-wire and laser methods show the best performance.

5.10 ACCELERATION MEASUREMENT

This parameter is usually sensed by a spring/mass system as shown in principle in Figure 5.1, where the spring is distorted under the influence of acceleration. The movement of the mass with respect to the case of the transducer is then measured by a displacement transducer; this in turn provides a signal in proportion to the acceleration.

5.10.1 Practical accelerometers

There are three basic types of accelerometer, namely:

(a) The conventional spring-mass accelerometer (Fig. 5.16). When used as a general purpose instrument, only nominal accuracies of 1% or so are obtained; also, there may be a high cross-sensitivity of 3% or so. There are a few instruments of greater precision, but the cost of these generally makes them less competitive with the force balance class of transducer. In all cases, the frequency range is generally from steady-state to about 250 Hz.

The spring and mass configuration is constructed in a rigid manner so that ostensively only one axis is sensitive to acceleration, frequently utilising leaf-springs, diaphragms, or cantilevers.

The mass is usually made of a stable material and may form part of the magnetic circuit of a displacement pick-off, whilst other designs use potentiometers, strain gauges, either wire or semi-conductor (piezo-resistive), or of fluid capacitive pick-offs.

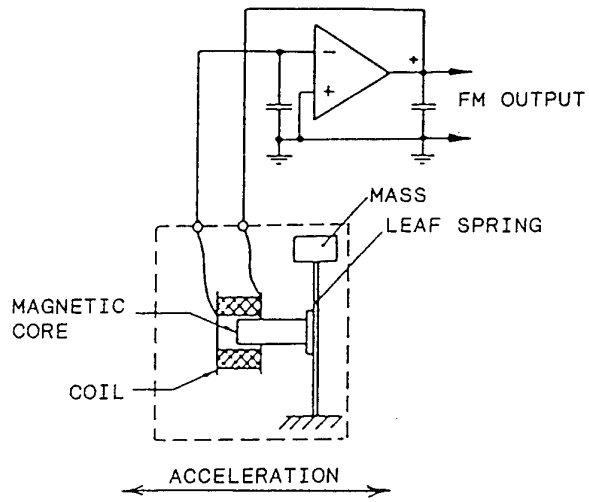

Figure 5.16. Variable self-inductance accelerometer in an oscillator circuit.

(b) Piezo-electric accelerometers (Fig. 5.17). These are essentially for dynamic measurement, such as vibration and shock. There is no steady-state response, but the top measurement frequencies may be in kilohertz to hundreds of kilohertz region.

In essence, the mass is directly attached to a piece of piezo material which provides both the spring and signal output function, and this very stiff construction usually provides the very high natural frequency fn. However, it is essential to isolate the piezo/mass system from the case of the instrument in order to provide immunity from temperature and case distortion effects, and therefore, only the very cheapest of instruments have this basic construction.

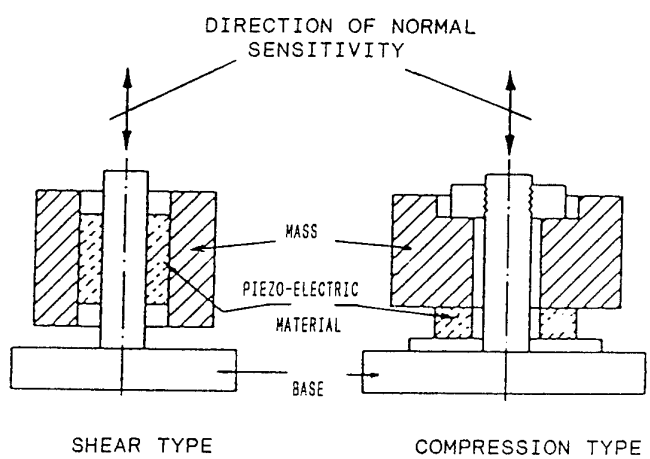

Figure 5.17. Two types of piezo-electric acceleration transducer.

(c) Force balance accelerometers. These generally replace the spring-mass instrument when good performance is required. They may be very expensive but may provide very good accuracy and frequency performance, ranging from steady-state to as high as 1 kHz or so. Generally this is the choice for such applications as inertial navigation systems. These are discussed in more detail below.

5.10.2 Force balance techniques (servo feedback transducers)

This technique is discussed in Section 5.5.7.2 and may be applied to almost any measurement. It is basically a principle of forcing all the moving parts of the measurement transducer to remain at balance position by opposing changes due to the parameter with some form of servo controlled force system (Fig. 5.18). For an accelerometer, the mass is controlled in a servo loop such that, immediately a movement of the mass is sensed, a force is applied which resists any further movement. Provided that the gain of the servo loop is high, it may be assumed that there is no movement of the mass, and the only change which takes place is an electrical change of current into the forcing coils. This current may then be used as the data representing acceleration.

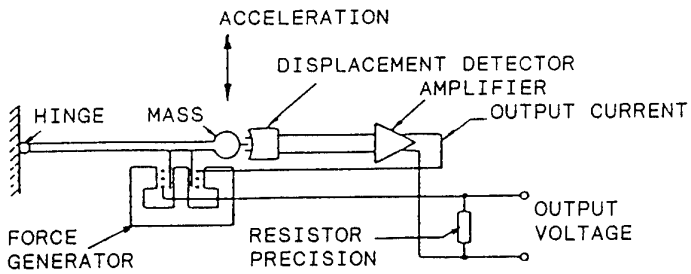

Figure 5.18. Force balance acceleration transducer.

5.10.3 Frequency response versus range and damping

As a general rule, the more stiff the construction of the instrument, the higher the acceleration range and the higher the frequency response. The relationship is basically a square law, i.e., 4 times acceleration range, will approximate to a 2 times frequency response. A guide to frequency range is provided in Section 5.10 above; however, note that the damping ratio directly affects the total working range with respect to *fn* (ref. Section 5.2.3).

As a general statement, the spring/mass type will range from about 1 *g* to a few hundred *g*, the piezo types have a much higher range, up to 10,000 *g* in extreme cases, whilst the force balance types may be extremely sensitive and range up to 1000 *g*.

5.10.4 Vibration measurement

The basic definition of vibration is displacement peak to peak at a given frequency, although peak values are often used. In most cases the measurement will be made inertially using an accelerometer, and thus the data must be integrated twice to deduce the displacement.

Direct measurement of vibration may be achieved by using a spring/mass instrument with a very low *fn* and making all measurements at frequencies well above *fn* . Thus the transducer is constructed in a similar manner to an accelerometer, but with a very low *fn* and no damping. Thus the mass remains seismically balanced in space, and the transducer body moves with respect to the mass. Obviously, any large movements of the transducer would create a limit stop situation, and therefore these instruments are generally limited to stationary measurements, i.e., stationary generators, engines, etc.

Various inductive or capacitive probe methods may be used to measure the vibration displacement provided a stable reference may be found. Optical and particularly laser methods may be very effective, but are often limited to the laboratory situation.

5.11 GYROS

This is a very complex and theoretical subject and only the basic concepts will be discussed here.

The two basic types are the free gyro and the rate gyro. Both types rely upon the spinning mass (similar to a flywheel and often known as the "wheel") which has the properties of rigidity (or stiffness) and precession.

5.11.1 Free gyros

Rigidity is a resistance to any force which attempts to change the spin axis and is the main property utilised for the free gyro (Fig. 5.19).

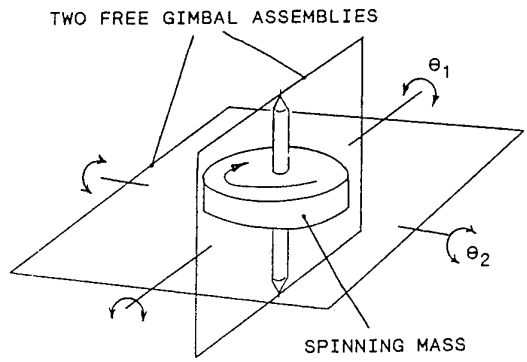

Figure 5.19. Free gyro assembly (vertical).

The wheel is mounted within a gimbal assembly which allows angular movement of the instrument case with respect to the wheel, thus the free gyro measures angular displacement and typically, in two planes. If the spin axis is vertical, the two angular planes are pitch and roll, and this would be known as a vertical gyro. If the axis were horizontal, it would be known as an horizontal gyro, directional gyro or azimuth gyro because it would measure displacements in the horizontal plane, commonly known as azimuth.

It is not possible to make a very general statement about range and accuracy; one reason is that so many instruments are related to compensation techniques, i.e., vertical pendulous gyros designed to track towards the Earth's gravity, compass and flux-gate correction systems and so on. But, the range is potentially up to 360°, although many vertical gyros are limited to less than ±1 quadrant of arc; and the fundamental accuracy is normally related to a few deg/min. or less for precision instruments. Damping (ref. Section 5.2.2.1) does not apply to these instruments.

5.11.2 Rate gyros

A rate gyro is similar in principle except that it is designed to measure angular velocity and uses the property of precession to detect the rotational rate. The gimbal assembly has only one degree of freedom and even this is restrained by a spring. When an angular input is applied in the axis which forces the wheel spin axis to rotate, the precessional forces react at right angles and against the spring. Thus the sum of precessional force and spring stiffness provides a calibrated means of measuring angular velocity.

In general, instruments are available to cover measurement from about 20 °/sec up to 1000 °/sec. Most rate gyros are damped, and because most show considerable self heating, there is often an in-built temperature/damping coefficient compensation process. Accuracies are typically approaching the 0.1 percent range for good instruments. These instruments are normally optimally damped (ref. Section 5.2.2.1) although phase requirements or dynamic requirements sometimes demand less or more damping respectively.

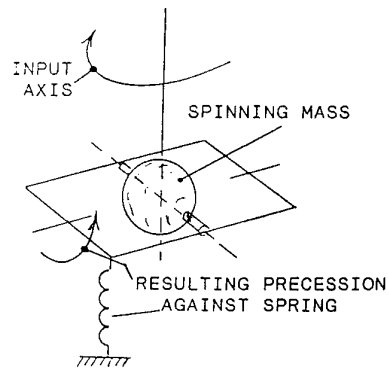

Figure 5.20. Rate gyro assembly.

5.11.3 Laser gyros

These are optical equivalents to the rate gyro and are discussed further in Section 5.6.4.

5.11.4 Gyro characteristics

All types of gyros have the property of not requiring a fixed reference, and therefore, like the accelerometer, they may be used anywhere in space and hence the use in navigational systems. Also, both mechanical types require some form of displacement transducer to measure the gimbal movement; this may sometimes be a synchro.

The free gyro measures angular displacement, usually in two planes. The rate gyro will only measure in one plane and thus may be considered as a form of tachometer, but has the important property of not requiring to be at the centre of the rotation; it will measure the same rate of rotation at any point on the vehicle. Refer to Figure 5.20.

5.12 PRESSURE

This parameter may be fluid or gas (including air), and the three basic ways in which it may be sensed are discussed below. Each method produces a displacement, and therefore there is always the dual choice, firstly of how to sense the pressure and then of how to sense the displacement to provide electrical data. Most of the displacement transducing principles have been employed throughout the range of pressure transducers available. Clearly such instruments as the traditional pilot's altimeter, ASI, and other pressure instruments do not require electrical output, and therefore the displacement is directly coupled to a pointer through mechanical linkages.

All pressure measurements are fundamentally made as a difference of two pressures, (Fig. 5.21) and therefore there are three concepts, i.e.,

Gauge pressure – Unknown pressure with respect to atmosphere (i.e., industrial measurement)

Absolute pressure – Unknown pressure with respect to a vacuum (or as near as possible) (i.e., altimeters, barometers, etc.)

Differential pressure – The difference of two unknown pressures (i.e., ASI, flow, etc.)

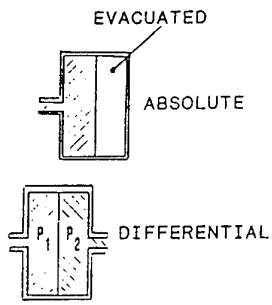

Figure 5.21. Pressure concepts.

5.12.1 Capsules and bellows (altimeters and ASIs)

This is probably the most sensitive method and is typically used for altimeters, ASIs, and barometers. The sensing element basically comprises an evacuated chamber, usually cylindrical and with either corrugated sides (bellows) or a single flat capsule, or sometimes a number of capsules connected in series (Fig. 5.22).

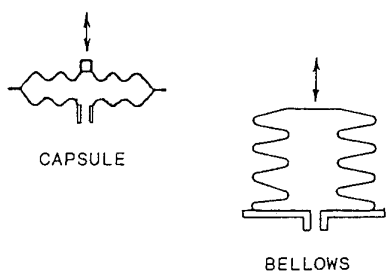

Figure 5.22. Capsule and bellows.

A typical air speed indicator (ASI) would be similarly constructed and would measure the difference of the two pressures from the pitot and static system. Additionally, since pressure difference is proportional to the square of the speed, special linearising linkages are often used to give a near linear reading of air speed.

The above discussion has related mainly to the visual, cockpit type of instrument, but similar principles are used to provide electrical data, and it is one area where the capacitive type of displacement pick-off is of value because of the minimal loading effects upon the sensor elements.

5.12.2 Diaphragms

This is probably the most widely used principle in general instrumentation. The diaphragm may be metallic, plastic, or a semi-conductor material (usually silicon, ref. Section 5.5.4) and is usually formed as a thin circular membrane mounted into a solid casing which is suitably fitted with pipe connections (or any other requirement).

As pressure is applied, the diaphragm begins to distort and the displacement of the diaphragm is measured by some form of displace ment pick-off (PO). Many transducers are constructed with a diaphragm and inductive PO combination, but many other types are available, including capacitance, piezo, and strain gauge. In the latter case silicon diaphragms and integrally diffused strain gauges are becoming increasingly available. See Figures 5.23 and 5.24.

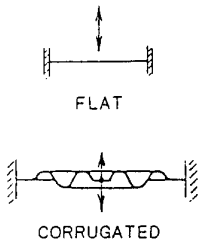

Figure 5.23.

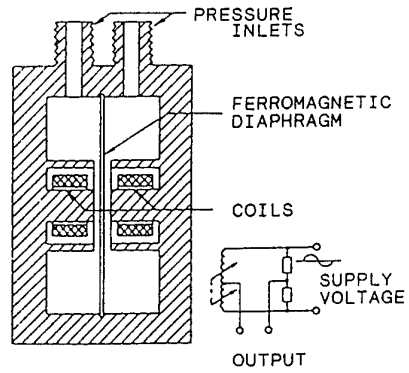

Figure 5.24. Variable self-inductive pressure transducer in a bridge circuit.

5.12.3 Bourdon tube

This type of instrument uses a length of curved tube to sense the pressure. Traditionally the tube is bent into a C shape and the curve progressively unwinds as pressure is increased inside the tube; the displacement may then be used as required. This instrument has established itself in industry to measure the medium to high pressures, many being the traditional brass bound pointer and dial gauge. For aircraft it is similarly found in the pilot's cabin to indicate engine and hydraulic pressures (Fig. 5.25). Capsule and Bourdon tube instruments may attain similar performance, although the sensitivity to acceleration must be recognised.

The instrumentation industry has developed the principle, sometimes with tubes of other shapes, and although the general use is for the medium to higher pressures, there are exceptions used for lower pressures, even to calibration equipment standards.

5.12.4 Performance and damping

The most general purpose instruments are based upon the diaphragm and may range from a few millibar for the very sensitive, up to 350 bar and much higher in extreme cases, particularly for the piezo-electric types. Basic accuracies usually approach 0.1%, although there is usually a notable degradation with temperature change.

The sensor system usually has a natural frequency of around a few kilohertz up to a few hundred kilohertz for the higher range instruments. Damping is rarely built into the transducer, but it may be achieved by external flow/plenum control. Sensitive instruments are often very acceleration/vibration sensitive.

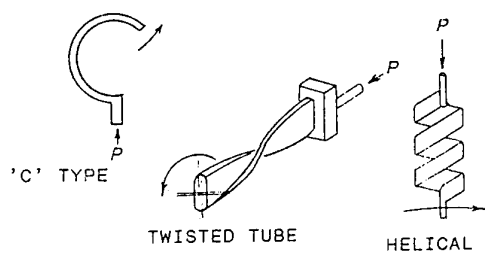

Figure 5.25. Some types of Bourdon tube.

5.13 TEMPERATURE MEASUREMENT

The three main electrical methods of sensing temperature are metallic resistance, semi-conductor resistance, and the thermocouple, these being in addition to the various optical methods and the many traditional methods such as bi-metal strips which bend with temperature, capsules filled with fluid and coupled to pressure transducers, and so on. However, the electrical methods are generally the most applicable to aircraft instrumentation.

5.13.1 Resistance bulbs and RTDs

Most metallic materials increase electrical resistance, with temperature and some show a very linear relationship, notably nickel and platinum. In many aircraft systems it is satisfactory to use the cheaper, although less accurate, nickel element. Transducers based upon these elements are often known as the resistance temperature detector (RTD). See Figure 5.26. Construction typically takes the form of a grid of the nickel or platinum resistance wire sealed inside a protective metal bulb, often termed a "resistance bulb." These are generally used for the near ambient temperatures such as atmosphere, engine oil, and cooling systems, although some types of RTD will work to above 1000 °C. An alternative construction is to form the resistance element into a film, often similar in construction and application to the strain gauge.

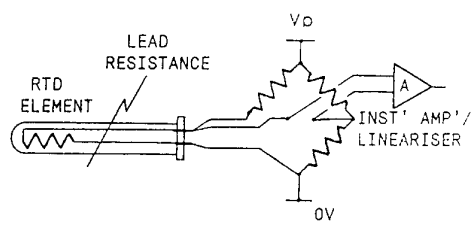

Figure 5.26. A typical resistance (RTD) bulb and a 3-wire bridge circuit.

Platinum is used extensively in general instrumentation as well as aircraft systems, both in wire and film form and provides a very good accuracy over the atmospheric temperature ranges and higher. Nickel does not provide the same order of accuracy. The resistance bulb construction gives a slow response, usually many seconds, whereas the film types may respond into the msec region; however, self heating from the polarising currents must be allowed for.

These transducers essentially become the one active arm of a Wheatstone bridge, and because of the relatively large deviations, the nonlinear law must be accounted for, and there are many signal conditioning modules available to cater for this. Additionally, steps must be taken against error due to lead resistance and the associated temperature coefficent; it is usual to connect the transducer with a three-wire, or even four-wire bridge system, or alternatively, a constant current circuit may be employed.

5.13.2 Thermistors

These are semi-conductor resistances and may be made to either increase resistance with temperature, or decrease. In both cases the increment of resistance change with temperature is generally greater than for wire, although fundamentally the linearity and accuracy is not so good. In many aircraft, thermistors are used as the sensors for the cabin temperature control, engine sensors, and a wide range of specialised applications. The construction may take many forms, ranging from small beads to larger or specifically designed packages. There are a variety of characteristics available, affecting both time and resistance response, and these methods are finding increasing use.

5.13.3 Thermocouples

These may probably be classed as the simplest form of transducer and are generally used for the higher temperature ranges in aircraft systems. Basically, if any two metallic conductors of differing alloy are joined together, a small voltage will be generated across the junction with increased temperature, and thus an electrical output is obtained in direct response to the parameter (temperature).

A complete thermocouple consists of both a hot and a cold junction, this is because the generated voltage is the result of the difference in temperature between the hot (the measurement) and the cold (the reference) junctions; however, this is not a serious problem in practice, and there are many signal conditioning and integrated circuits (IC) techniques available (Fig. 5.27).

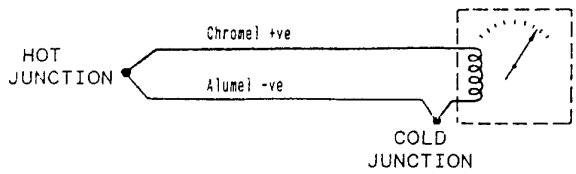

Figure 5.27. The basic thermocouple circuit.

5.13.3.1 Thermocouple alloys and performance

Because of its simplicity and ruggedness, the thermocouple has a wide range of application and is particularly useful for rugged, high-temperature measurement, and specialised research functions. However, the data voltages are small and the accuracy is not good, particularly at the lower temperature. Comprehensive data are published for the various thermocouple alloys, but it is generally not possible to make a measurement to better than 3/4 °C, often worse.

The main alloys in use are as follows:

Chrome/Alumel (Type K), approx. 40 microvolts/°C.
Generally the most accurate and widely used - up to about 1000 °C.

Iron/Constantan (Type J), approx. 46 microvolts/°C
More frequent in industrial applications - up to about 700 °C

Platinum/Rhodium-Platinum (Types R & S), approx. 9 microvolts/°C
Specifically for higher temperatures - up to about 1700 °C.

Additionally, copper/constantan is frequently used for inter-connection, this being less expensive than the thermocouple alloys, but having a similar characteristic.

The time response of the common wire thermocouple is normally in the order of many seconds; however, film techniques are possible which vastly increase this response.

5.13.3.2 Jet pipe temperature (JPT)

A typical jet-pipe temperature measuring system would consist of an array of thermocouples around the inside of the jet-pipe, all connected in parallel. This provides a good average measurement of gas temperature, plus integrity, in that a number of thermocouples could fail, but still leave others to give the data. This is a valuable feature for such a vital engine measurement and in such a harsh an environment. Typically the signals from the thermocouples are taken to a pilot's meter and also to the top temperature unit; both of these equipments are usually fitted with synthesised cold junctions.

5.13.4 Optical methods

When a body is heated, both heat and light energy is radiated and methods of sensing this as a means of temperature measurement are briefly as follows;

Total radiation – This is where the heat energy is focussed onto a thermocouple or similar, and thus a data voltage may be produced in response to energy radiation. This is generally more useful for the higher temperatures.

Photon or continuous optical pyrometery – In these methods the measured radiation is totally from light energy, and thus the detector must be some form of photoelectric device. These methods are increasing in use and may include the various infrared (IR) image forming techniques, all of which may be used with a fair amount of accuracy down to ambient temperatures.

Optical techniques are of particular value where noncontacting measurement is required; however, there are a number of serious error sources, in particular with regard to the radiation qualities (emissivity) of the radiating surface. A perfect black body radiator is said to have an emissivity of 1.0, but in practice emissivities of as low as 0.2 may be encountered, and the correct figure for a particular subject may not always be evident.

5.14 BIBLIOGRAPHY

1. Allocca, John A. and A. Stuart, *Transducers, Theory and Practice*, Reston Publishing Company, 1984.
2. Atkinson, P., *Feedback Control Theory for Engineers*, Heinman Educational Books, 2nd Ed., London, 1983.
3. British Standards International Thermocouple Tables. BS4937: Part 4, 1973.
4. Cady, W.G., *Piezoelectricity*, McGraw Hill, 1946.
5. Doebelin, E.O., *Measurement Systems, Application and Design*, McGraw Hill, NY, 1983.
6. France, J.T., "The Measurement of Fuel Flow," AGARDograph 160, Vol. 3, Mar. 1972.
7. Gregory, B.A., *Electrical Instrumentation and Measurement Systems*, 2nd Ed., The MacMillon Press, 1981.
8. Herceg, E.E., *Handbook of Measurement and Control*, Revised Ed., Schaezitz Engineering.
9. Instrument Society of America, "Electrical Transducer Terminology," Rev. 1982, Document No. ANSI/ ISA-S37, 1-75.
10. Instrument Society of America, "Standards and Practices for Instrumentation," Third Edition, 1970, Document No. ISA-537.
11. "ISA Transducer Compendium, Parts 1, 2, 3," G.F. Harvey, editor, Plenum Press, 1969, 1970, 1972.
12. Kottkamp, E., H. Wilhelm, and D. Kohl, "Strain Gauge Measurements on Aircraft," AGARD-ograph 160, Vol. 7.
13. McLaren, I., "Open and Closed Loop Accelerometers," AGARDograph 160, Vol. 6, July 1974.
14. Nyquist, H., "The Regeneration Theory," Bell System Tech. Journal, 1932.
15. *Sensor Selection Guide (SSG)*, H.N. Norton, editor, E. Sequoia S.A., Switzerland, 1984.
16. Stieler, B. and H. Wilhelm, "Gyroscopic Instruments and their Application to Flight Testing," AGARD-ograph 106, Vol. 15.
17. Trenkle, F. and M. Reinhardt, "In-Flight Temperature Measurements," AGARDograph 160, Vol. 2, Feb. 1973.

18. van der Linden, J.C. and H.A. Mensink, "Linear and Angular Position Measurement of Aircraft Components," AGARDograph 160, Vol. 8, Jan. 1977.

19. Vedrunes, M., "The Measurement of Engine Rotation Speed," AGARDograph 160, Vol. 4, Oct. 1973.

20. Wuest, W., "Pressure and Flow Measurement," AGARDograph 160, Vol. 11.

Appendix. Table of typical transducers used for flight test instrumentation.

Measurand	Transducer common name	Transduction principle	Typical maximum range	Accuracy*
Acceleration and vibration	Accelerometer	Potentiometric	±50*g*	Medium
		Strain gauge	±100*g*	Medium
		Piezoelectric	±10,000*g*	Medium
		Force balance	±35*g*	High
Acoustics and sound	Microphone	Capacitive	180 dB	Medium
		Piezoelectric	160 dB	Low/medium
Air flow direction	Vanes	Potentiometric	±30°	Medium
		Synchro	±30°	Medium
	Aerodynamic probe	Diff. pressure	±30°	Medium
Attitude	Gyroscope	Gyroscopic	±45°	Medium
Attitude rate	Gyroscope	Gyroscopic	±2,000 deg/sec	Medium
Displacement, linear	Potentiometer	Potentiometric	300 mm	Medium
	LVDT	Diff. transfmr.	300 mm	Medium
Displacement, angular	Potentiometer	Potentiometric	3,600°	Medium
	Synchro	Inductive	360°	High
	Shaft encoder		360°	High
Flow rate, vol.	Flow meter	Turbine	3,000 gal/hr	Medium
Flow rate, mass			20,000 lb/hr	
Strain, loads	Strain gauge	Resistive	6,000 μ in/in	Low
Liquid level		Capacitive	12 ft	Medium
		Nuclear	6 ft	Medium
Pressure	Pressure transducer	Potentiometric	500 psi; 350 N/cm^2	Medium
		Strain gauge	5,000 psi; 3,500 N/cm^2	Medium
		Capacitive	1,000 psi; 700 N/cm^2	Med/High
		Piezoelectric	10,000 psi; 7,000 N/cm^2	Medium
Rotary speed	Tacho generator	Inductive	100% RPM	Medium
Temperature	Resis. thermom.	Resistive	1,000 °C	High
	Thermistor	Resistive	300 °C	High
	Thermocouple	Thermoelectric	1,200 °C	Medium

*Low accuracy: error > 3% FS, medium accuracy: error < 1–3% FS, high accuracy: error < 1% FS.

Appendix. Concluded.

Data frequency response (Hz)	Type		Output Level Low 1 V High 1 V	Output Impedance Low 10 High 10	Remarks
20	dc,ac	Voltage	High	Low	Must be used with charge amplifiers or with preamplifiers with very high input impedance
200	dc,ac	Voltage	Low	Low	
10,000	ac	Volt, charge	Low/high	See remark	
20	dc	Current	High	Low	
100,000	ac	Voltage	Low	High	
10,000	ac	Volt, charge	Low/high		
10	dc,ac	Voltage	High	Low	
10	dc	Voltage	High	Low	
			(See pressure)		
10–100			(See displacement)		
10–100			(See displacement)		
20	dc,ac	Voltage	High	Low	
20	ac	Volt, phase	High	Low	
20	dc,ac	Voltage	High	Low	
20	ac	Voltage	High	Low	
20	Digital				
	Pulse rate		Low	Low	
10,000	dc,ac	Voltage	Low	Low	
	ac	Voltage	Low	High	
	Pulse				
20	dc,ac	Voltage	Low	Low	See remark acceleration and vibration
10,000	dc,ac	Voltage	Low	Low	
100,000	ac	Voltage	Low	High	
10,000	ac	Volt, charge	Low/high	See remark	
	Frequency		Low	Low	
20	dc,ac	Voltage	Low/high	Low	
200	dc,ac	Voltage	Low/high	Low	
2	dc	Voltage	Low	Low	

Chapter 6

SIGNAL CONDITIONING

by

Rodney K. Bogue
NASA Ames Research Center
Dryden Flight Research Facility
PO Box 273
Edwards AFB, CA 93523-0273
United States

6.1 INTRODUCTION

In the process of acquiring flight information, the ideal situation would use sensors providing perfect information, impedance-matched and formatted to fit follow-on processes. As used here "perfect" implies that the information is an exact replica of the physical parameter of interest. Common parameters include: pressure, temperature, angular rate, and control position. Information from aircraft sensors is usually in an electrical form. In this ideal situation, little or no signal conditioning would be required. It may be necessary to provide filtering to adjust the sensor bandwidth to that of interest to the user, but other signal conditioning would not be needed. As with most real world situations, the ideal is rarely, if ever, achieved. In addition, signal conditioning is almost always utilized to provide an improved match between the information and signal peculiarities of the sensor and the follow-on stages of the flight information acquisition system. A hazard that is common to all information acquisition systems is the contamination of the desired information with undesired information (usually called noise). Numerous sources of noise exist in an aircraft and signals are almost always contaminated to a degree with undesirable noise information (see Ref. 6.1). The process of following accepted wiring practice to isolate noise sources, coupled with good signal conditioning practice, will minimize the noise contamination. Signal conditioning in the form of noise filters may be required to separate undesired noise information from desired signal information.

6.1.1 Signal conditioning definition

As defined in this chapter, signal conditioning is any operation performed on a parameter prior to the input stage of a recording or display system. Signal conditioning is performed to adjust the data characteristics or to optimize the transfer of data from one stage of conditioning to another. Normally the signal conditioning will be performed after transduction has occurred; however, signal conditioning often occurs (either by accident or by design) prior to transduction.

6.1.2 Signal conditioning purpose

Signal conditioning is performed to adjust signal characteristics or to optimize the signal transfer from one stage of conditioning to another. A different way to state the purpose is: to minimize the desirable information damage as the signal wends its way from the sensor through the various subsystems of the overall flight instrumentation system. Examples of signal conditioning include:

1. Analog signal characteristic transformation, such as that performed in a charge amplifier circuit to convert the information contained in the transducer charge into a voltage much more amenable to interfacing with a data acquisition system.

2. The amplification–attenuation and zero shifting of information in analog format to bring the signal span and offset into a range that can be accommodated by the analog interface to the data acquisition system.

3. The conversion of analog format information to digital format in an analog-to-digital (A-to-D) converter. This is done to (a) preserve the accuracy and resolution of the data (data in digital form are much less susceptible to noise damage than data in analog form) and (b) facilitate the transfer and processing of information in digital systems.

4. The conversion from one format of digital information into another format better suited to a particular situation. Examples of this category include: conversion from parallel to serial form, or from RS-422 to a MIL 1553B form. (See Refs. 6.2 and 6.3.)

5. The compensation for effects of the physical environment on the operation of the sensor–transducer and associated signal conditioning system. A common example is the compensation of the signal information for temperature effects encountered in the aircraft environment.

6.1.3 Principles of signal conditioning

There are several basic principles to observe during the design of a signal conditioning system. This is to assure that the resulting signal conditioning system will provide the highest quality information while meeting the requirements of the flight program.

6.1.3.1 Treat the sensor–transducer as a system

Sensing and transduction operations include numerous parts. Together the parts have all the characteristics of a system with associated transfer functions. The characteristics include frequency response and time delays which may require compensation in the signal conditioning. A pressure measurement system is a commonly used example offering several opportunities to illustrate this principle. The pressure measurement system has two basic elements: the sensor–transducer element and the pressure network. The pressure network transfers the pressure signal from the point of measurement to the sensor–transducer. The pressure network may be very simple or extremely complex and usually is assessed and analyzed somewhat independently from the sensor–transducer. The effect of the pressure network (tubing and transducer internal volume) on the pressure signal is an example of pretransduction signal conditioning.

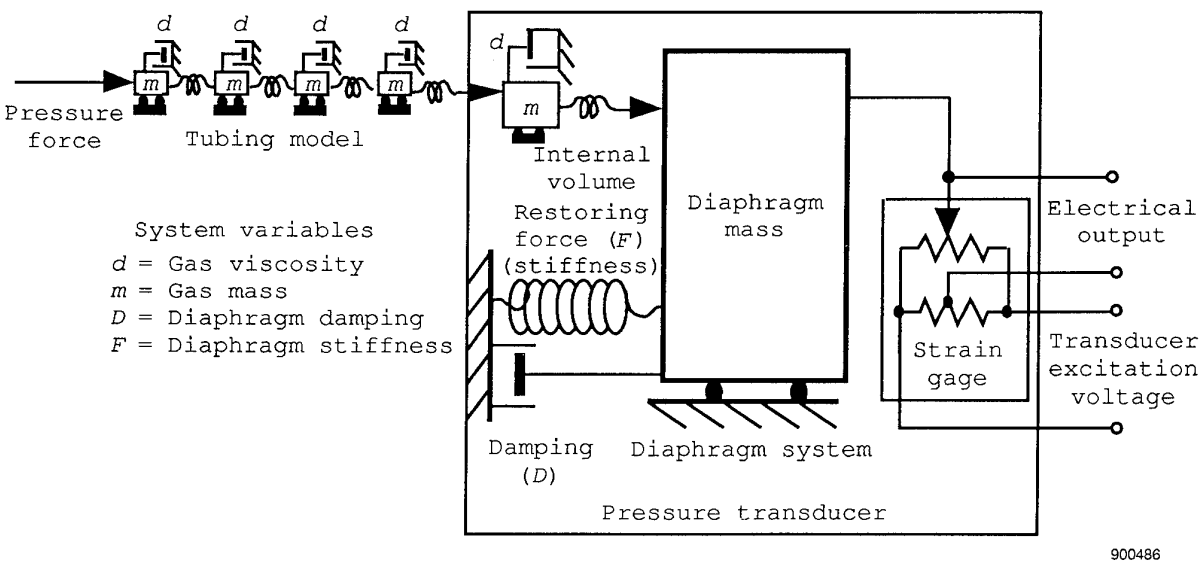

Figure 6.1-1. Pressure sensor system.

Figure 6.1-1 shows the interconnection of elements commonly encountered in a pressure sensor. A typical pressure sensor is comprised of a diaphragm which deflects under the pressure force. Attached to this diaphragm is a resistance strain gage bridge which provides an electrical output proportional to the diaphragm deflection. Both the diaphragm and the strain gage respond to the effects of temperature. It is always a safe assumption that all elements respond to the effects of a temperature change. The need for temperature compensation must be assessed by the flight test instrumentation engineer after consideration of the expected flight environment together with the accuracy requirements of the program. The diaphragm-strain gauge sensor subsystem also has a frequency response which is determined by several factors. The basic mechanical response is determined by the diaphragm stiffness, combined with the mass of the combined diaphragm and strain gauge. The damping of this system is largely determined by the combined friction loss characteristics of the diaphragm and the damping of the gas in contact with one or both sides of the diaphragm. Considerations of these factors would complete the first-order assessment of the sensor–transducer static and dynamic response.

The frequency response characteristics of a pressure measurement system are limited by the characteristics of the pressure attachment network more often than they are limited by the sensor–transducer characteristics. High-frequency signals are rapidly attenuated by passage through long lengths of small-sized tubing. This is particularly acute when the transducer itself contains a significant internal volume which must be "driven" (filled and vented) from the pressure attachment network. Other factors to consider with the pressure attachment network include the effects of changing altitude and temperature, which are associated with flight measurement systems. As higher altitudes are achieved, the reduced ambient pressure and resulting reduction in density lowers the frequency response of the system. Temperature increases cause changes in density and viscosity, which can have substantial effects on the frequency response of the pressure attachment network. Flight at supersonic speeds causes the development of shock wave networks in the vicinity of the measurement orifices. These networks can inhibit the venting and filling of the pressure system, thus causing further changes in the system response. This latter effect is highly dependent on system specific configurations and unlike the previous effects it does not readily lend itself to mathematical analysis. The effects of the pressure attachment network on the signal characteristics are called pretransduction signal conditioning, since these effects are imposed on the pressure parameter prior to transduction.

The first-order effects on the strain-gauge electrical characteristics are usually limited to changes brought on by changes in ambient temperature. The commonly used bridge connection of the strain-sensing elements is designed to minimize and compensate for temperature-related changes. Since this type of pressure measuring device is nonself-generating, an excitation voltage must be supplied to the strain-gauge bridge. This is a critical factor which has a direct effect on the ultimate scale factor of the pressure measurement system.

6.1.3.2 Understand the flight environment

Knowing the flight environment can be a critical element in assessing malfunctions without any obvious cause. Significant environmental factors include: (1) temperature (especially low temperature at high altitudes or high temperature at high speeds), (2) vibration (potentially of great importance when flexible mounting supports are used), (3) electrical noise (frequently generated by the aircraft system), and (4) pressure (at low levels the pressure reduces system resistance to arcing). It is frequently prudent to include environmental sensors in the measurement system to provide clues when unexplained difficulties arise with normally reliable sensors and transducers. These environmental sensors often provide clues to the causes of malfunctions. This is done by providing environmental information to assist in identifying differences in temperature or other environmental parameters which may be affecting sensor operation. Often it is possible to correlate the onset of a malfunction with a particular environmental condition, such as a temperature level or a g level. When the environmental problem is understood, appropriate signal conditioning can be created to compensate for the environmental effect. Alternatively, environmental control capability may be added to avoid the malfunction. If neither remedy is successful, it may be necessary to replace the sensor with one better suited to the environment. An example is the case of a piezoelectric accelerometer which stopped working under low-temperature conditions. It was determined that neither signal conditioning nor environmental control could be used to solve the problem. The only solution was to replace the accelerometer with a thoroughly tested unit, verified for operation in the cold environment.

6.1.3.3 Understand the physics behind the operation of the sensor–transducer system

In concert with the principle of treating the sensor–signal conditioning as a system, recognize that each part of the sensor has its own response characteristics which must be accommodated in situations where its influence may be felt. For example, a flush-diaphragm transducer does not have the usual cavity on both sides of the diaphragm. This may lead to a very lightly damped diaphragm that is sensitive to rapid pressure transients. It may be possible to provide damping from the back side of the transducer to bring the underdamped condition to an acceptable level of performance. Another example of this principle is to understand that piezoelectric transducers provide a charge output proportional to the sensed parameter. It is possible to use a voltage amplifier to condition the output signal. However, if it is understood that the critical output of the transducer is the electrical charge, it will be understood that the voltage output of the sensor is dependent on the stray capacitance associated with the transducer and connecting cabling. Therefore, a voltage amplifier will cause the

conditioned output to be a function, not only of the transducer output charge, but also of the stray capacitance in the system. The stray capacitance is usually an uncontrolled parameter sensitive to temperature and other environmental effects. A charge amplifier, on the other hand, provides a conditioned output signal directly proportional to the transducer output charge.

6.1.3.4 Signal condition appropriate to the basic transducer output characteristic

For example, if the transducer is a piezoelectric device whose output is an electrical charge, a charge amplifier should be used to condition the output to a signal proportional to charge. Inappropriate signal conditioning will add noise to the conditioned output and often decrease the sensor tolerance to changes in the environment. When the transducer output is an impedance change, signal conditioning should be provided to develop an output proportional to the respective impedance. In this case, an appropriate approach would be to use an impedance bridge configuration, or a constant current sensor excitation to minimize the effects of installation variables.

6.1.4 Signal conditioning categories

A so-called "linear" signal conditioning operation is one governed by a linear differential equation. Another way to specify a linear operation is to say that no frequency exists in the conditioned output which did not exist in the raw input signal. Most linear operations are analog in nature.

Nonlinear operations are all operations that do not fit the linear category. Most digital operations are of the nonlinear type. Analog operations that involve complex functions involving powers greater than one or product terms of algebraic functions are examples of nonlinear analog operations.

6.2 LINEAR OPERATIONS

Linear signal conditioning operations are governed by linear differential equations (for example, $ax'' + bx' + cx + d = y$). The term "linear" is derived from the fact that there are neither terms in the equation involving the product of x terms nor terms raised to powers other than one. Linear operations are characterized by having no frequency in the output from the operation which did not exist in the input to the operation.

6.2.1 Amplification and attenuation

Amplification and attenuation are examples of linear signal conditioning operations. Amplification consists of increasing the power of a signal by a factor. Considering the algebraic equation for linear operations ($y = mx + b$) with x the input variable and y the output variable, amplification would be represented as an increase in the m coefficient value. Amplification is necessary when the signal level from the sensor–transducer is insufficient to provide an appropriate input to the follow-on stage. Amplification is accomplished by using some type of amplifier. Attenuation is an infrequently needed signal conditioning operation because signals are, in general, low level. When necessary, attenuation is usually accomplished with a passive resistor network.

6.2.1.1 Types of amplifiers

The type of amplifier may be categorized into the input and output parameters upon which the unit operates. For example, a voltage input may result in a current output, or a charge input may result in a voltage output. As indicated by the examples, the output parameter may not be the same as the input. The most prevalent amplifier, however, is the voltage-input, voltage-output type. Occasionally, it may be necessary to use a special purpose amplifier to address a particular set of circumstances.

Matching the transducer output parameter is one of the most important situations where a special purpose input amplifier is required. For example, when the transducer output is a current, an amplifier whose input is designed to accept voltage as an input should not be used just because it happens to be readily accessible. As noted in Sections 6.1.3.3 and 6.1.3.4, the amplifier input parameter should be matched to the sensor output parameter. In this example, a current amplifier should be used when the output from a sensor is a current. Another common situation occurs when it is necessary to match the charge output from a piezoelectric sensor to an amplifier designed to accept charge as an input. Most data acquisition systems accept voltage as an input, so it is usually safe to use an amplifier whose output is a voltage for direct connection to these systems.

Compensating for line resistance fluctuations is a situation where the use of a current amplifier offers the opportunity to reduce induced noise pickup. This situation may occur when the signal leads pass through slip rings or through a high-temperature region which may appreciably change the line resistance as the temperature fluctuates. In this case, driving the signal lines with a current amplifier and converting the line current to voltage with a current-to-voltage amplifier may be a prudent approach to limiting the noise contamination from line resistance effects.

6.2.1.2 Important amplifier characteristics

It is important that an amplifier have well-controlled and stable characteristics for good performance in the signal conditioning role. The most important characteristic that an amplifier should possess is linearity. The output parameter should be a faithful reproduction of the input parameter at an increased magnitude. In other words, does the amplifier have the same gain for all signal levels, or does the gain change or the amplifier saturate for signal levels within the range of interest? Another important characteristic is that the amplifier gain should not be affected by environmental conditions such as temperature.

6.2.2 Filtering (signal enhancing)

Filtering is a linear operation often performed as part of signal conditioning to enhance a particular part of the information imbedded with other material within the overall signal. Filtering is done with the intent of eliminating unwanted frequencies in the signal. However, if not used with great care filtering can also change essential information.

6.2.2.1 Filtering examples

Several common examples of signal conditioning filtering are used to illustrate the widespread application of filtering. The first type of filtering, antialiasing filtering, is used to prepare the signal for A-to-D conversion. Ill-prepared signals converted to digital format may contain a mixture of frequency information which irretrievably damages the information of interest. Chapter 7 of this document contains an extensive discussion of antialiasing filtering. The type of low-pass filter should be chosen to provide adequate protection against aliasing and to avoid undue distortion of the signal wave shape, when that is an important consideration.

Figure 6.2-1 shows the frequency response of seventh-order Bessel, Butterworth, and Chebyshev filters. This information would indicate that the Chebyshev filter provides the most rapid attenuation and therefore the "best" antialiasing protection.

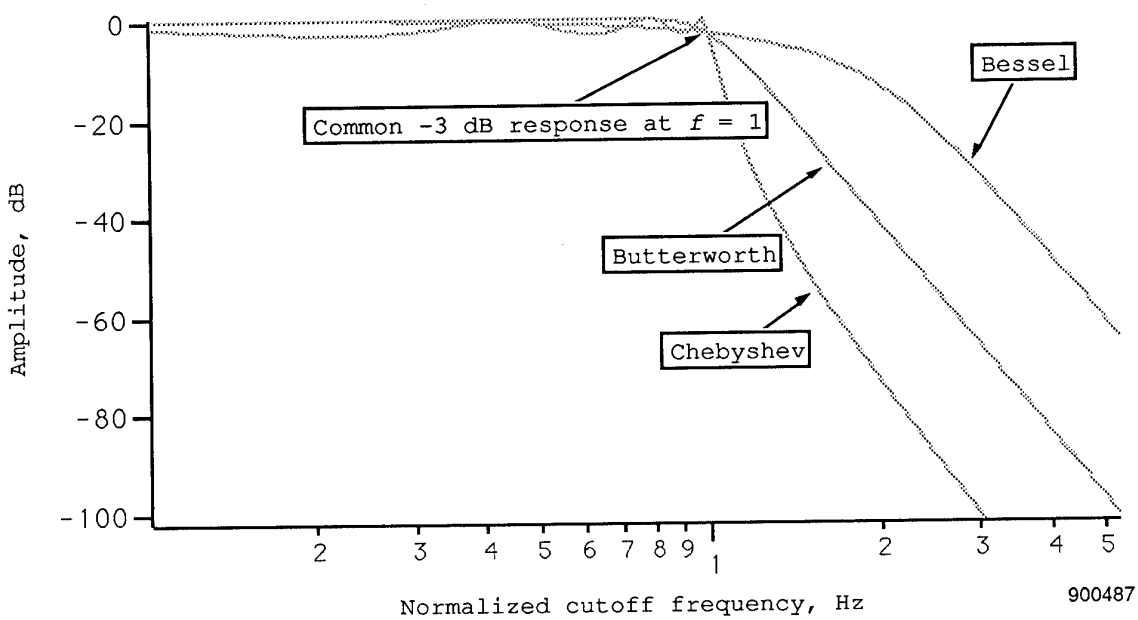

Figure 6.2-1. Seventh-order-filter frequency response comparison.

A look at Figure 6.2-2 shows that the wave shape of a noisy input square wave, at a frequency of half the filter cut-off frequency, is severely distorted by the Chebyshev filter and is best preserved by the Bessel filter. Therefore, a review of the system information requirements must be conducted before an appropriate filter can be selected.

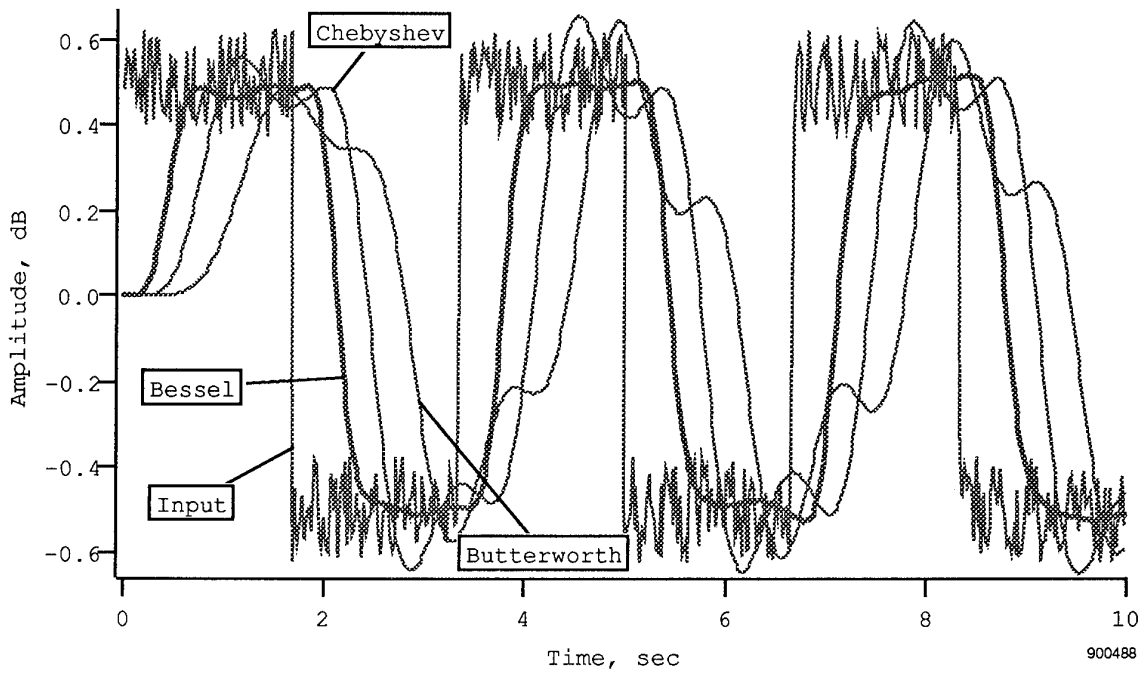

Figure 6.2-2. Seventh-order-filter time response comparison.

A second type of filtering is used to remove an unwanted steady-state signal component so that more important dynamic information may be assessed. This type is termed a high-pass filter. Filtering is used to remove unwanted noise information from a signal, but only after all other procedures (such as improving the ground network) have been implemented. The noise contamination often arises from other airborne systems, which radiate electric or magnetic fields that are collected by the sensor–transducer or its associated wiring and must be removed for optimum information analysis. Often this noise contamination is at a characteristic frequency such as might be used in aircraft 400-Hz power generators. This noise can be attenuated using a band-pass filter. Extra care must be exercised with the band-pass filter to avoid problems created by the often abrupt phase change characteristics near the band-pass frequency. Abrupt phase change characteristics can cause substantial wave-shape distortion in a signal.

6.2.2.2 Types of filters and characteristics

There are three basic types of filters used in signal conditioning applications. The first and probably the most often used is the low-pass filter which attenuates high-frequency signal components and minimally affects the low-frequency information. This filter is used (as noted previously) for antialiasing applications. In addition, when the information of interest in a signal is contained in the low-frequency or quasi-steady-state region of the spectrum, a low-pass filter is used to attenuate the unwanted high-frequency information. When the information of interest in a signal is found in the higher range of the spectrum, a high-pass filter is often used to attenuate the lower frequency components to facilitate the observation and analysis of the dynamic information. In the case where a single frequency or a band limited noise source adulterates the desired signal, it is possible to remove the offending information using a band-stop filter. In some circumstances, the information of interest is contained in a single frequency or a narrow band of frequencies. A band-pass filter is used in this situation to remove noise from the signal. Band-stop and band-pass filters often have highly

nonlinear phase characteristics and the use of these filters introduces the risk of substantially altering the signal wave-shape information.

6.2.3 Zero shifting

In some cases a signal may contain a steady-state component which contains no information of interest. An additional difficulty with the steady-state component is that it makes ineffective use of the dynamic range of the signal conversion processes (A-to-D conversion, frequency modulation (FM) conversion, and so on). Under these circumstances, zero shifting may be used to bring the range of the signal excursion into a more favorable range for conversion. Zero shifting is an operation often built into standardized signal conditioning modules. Although zero shifting is a simple concept, it is not easy to mechanize, particularly when high resolution-accuracy is a requirement. Zero shifting is probably most necessary with bridge-type sensors such as strain gauges. Sometimes, it is more effective to add trimming resistors to the bridge installation to achieve the correction of the zero offset. An alternative solution to the zero offset is to use a high-pass filter with a very low-frequency cutoff. The filter approach can compensate for slowly drifting steady-state levels and will pass the dynamic signal components, which are usually of more interest.

6.2.4 Compensation

Compensation is often utilized to counteract the undesirable effects of environmental parameters on transducer characteristics. Temperature is the most important parameter requiring compensation (often in the form of a so-called "ice bath reference"). Other parameters that sometimes require compensation are ambient pressure and transducer excitation level. Transducer zero offset and scale factor changes with temperature are often corrected to improve final data accuracy in critical situations where high accuracy is an absolute requirement.

6.3 SIGNAL CONVERSION

Signal conversion is performed to change the signal characteristics for one or more of the following reasons:

1. To decrease the susceptibility of the signal-to-noise contamination.
2. To enable telemetry transmission of the signal over a radio frequency link.
3. To enable the recording of the signal on magnetic recording media.

The first purpose is exemplified by the use of a carrier system with an impedance bridge (such as a strain gauge). This approach makes the modulated carrier signal resistant to the introduction of noise outside a bandwidth localized near the carrier frequency. Another more familiar example is the encoding of an analog signal into a digital format, to limit noise susceptibility. Digital formats are particularly resistant to the introduction of noise.

The conversion of the analog signal to an FM format is an example of signal conversion performed to enable the signal transmission over a radio-frequency (RF) link and to permit the magnetic recording of the signal. Modern systems typically use a double conversion to FM format. First, several channels are converted to FM. The channels are then multiplexed to a composite signal, and the signal is converted to an FM format. The first step in this FM conversion process uses a separate subcarrier frequency for each data channel. This process is termed FM-FM. Conversion to digital format is another common example of a conversion performed for transmission and recording purposes.

6.3.1 Modulation

Modulation is the process of using a characteristic of a so-called carrier signal to convey information, either for transmission to a remote receiving site or for recording on magnetic media. The carrier signal characteristics used most often for modulation purposes are the carrier amplitude, frequency, and phase. Strictly speaking, pulse code modulation (PCM) does not fit the traditional concept of modulation. Pulse code modulation is the conversion of analog information to a digital form through the use of an A-to-D converter.

6.3.1.1 Amplitude modulation

Amplitude modulation (AM) is rarely, if ever, used for telemetry purposes in modern flight data acquisition systems. The AM process is highly susceptible to noise contamination, although it makes effective use of available bandwidth. Amplitude modulation telemetry is suitable only for signals where the dynamic and steady-state accuracy requirements are very relaxed.

The AM process is well-suited to an individual sensor carrier system for noise suppression. A variable impedance sensor is often used in a bridge configuration to provide a balanced output and a zero offset capability. It is common to provide steady-state, direct current (dc) excitation to an impedance sensor (such as a strain gauge) in the bridge configuration. This steady-state excitation provides acceptable performance where the environment is reasonably noise-free; however, any noise induced into the circuit is inseparable from the normal signal and appears as an error voltage. It is advantageous to excite a bridge sensor configuration with an alternating current (ac) single frequency when it is important to reject noise pickup. In this situation, the bridge signal configuration performs as a balanced modulator whose output is in the form of a suppressed carrier signal. With the ac excitation, the information in the output signal is contained in the amplitude of the carrier. The noise voltages that may appear are outside the bandwidth of the carrier and are easily rejected through proper application of filters. Another advantage of this technique is that the suppressed carrier signal may be amplified using ac-coupled amplifiers, which are not susceptible to the drift and offset variations caused by temperature changes in dc amplifiers.

6.3.1.2 Frequency and phase modulation

Frequency modulation (FM) and phase modulation (PM) have excellent noise rejection characteristics, with FM being more widely used in flight systems. Frequency modulation is an attractive approach because tradeoffs can be made between modulated signal bandwidth and accuracy to cover a wide range of requirements. The Inter-Range Instrumentation Group (IRIG) has defined FM systems standards in proportional bandwidth (PB) and constant bandwidth (CB) forms (see Ref. 6.1). Proportional bandwidth systems include channels whose bandwidth is proportional to the subcarrier frequency to accommodate a mix of signals with a variety of signal bandwidths. Constant bandwidth systems are specified with all channels having the same bandwidth independent of the subcarrier frequency. The CB systems are most useful where several channels having similar bandwidth requirements must be accommodated.

An important index of FM system performance is the ratio of carrier deviation frequency to maximum signal frequency (termed the deviation ratio). As a rule, an improved data signal-to-noise ratio (SNR) will be realized with higher deviation ratios. When the signal frequency increases, the sidebands (located on either side of the modulated carrier) are more widely spaced and thus fewer of these sidebands can be included in the bandwidth limited modulated composite signal. The fidelity of the modulation-demodulation process is directly related to the number of sidebands included in the transmission. Accuracy studies have shown that a deviation ratio of 4 produces a data SNR of approximately 34 dB (2% rms error), while a ratio of 2 yields a data SNR of approximately 26 dB (5% rms error). The SNR for a data channel varies as the 1.5 inverse power of the deviation ratio (Ref. 6.1). As with most systems, higher accuracy performance is achieved at the expense of increased bandwidth.

Although it is not widely recognized, an FM system is a sampled system with an infinite resolution. Since the signal information is contained in the frequency of the modulated carrier, the frequency must be measured to determine the signal level at any point. Measuring the frequency requires a finite time (however short it may be) because the composite signal must be measured at two separate time points for frequency determination. It is very important to consider this effect to avoid aliasing as described in Chapter 7 of this document. For more information refer to Reference 6.1, Chapter 5.

6.3.1.3 Pulse code modulation

Pulse code modulation (PCM) is a widely used technique for converting analog information into a digital form, either for storage or for transmission over a telemetry link. The conversion from analog into digital format may be accomplished using a variety of techniques, some of which will be discussed in the following

narrative. As with FM, PCM systems can be tailored to accommodate a variety of requirements by trading-off system resolution against bandwidth. Increased measurement resolution is obtained by increasing the digital word length of the converted digital data. In most situations, these digital data are transmitted in serial format. In the serial format, all else being equal, the increased data word length takes more time for transmission, thus reducing the channel bandwidth.

6.3.2 Demodulation

Demodulation is the process of recovering the original information from a modulated signal.

6.3.2.1 Amplitude modulation signals (phase sensitive demodulation)

The AM signal information in an individual sensor system is contained in the suppressed carrier signal from the transducer bridge, which is acting as a balanced modulator. Normally, this information must be converted into a standard analog signal for analysis or further processing. This requires a balanced demodulator which extracts the amplitude information. A balanced demodulator requires the availability of the original carrier as a reference. Devices which may be used for demodulating include analog multipliers and electronic chopper circuits. Both are driven by the reference carrier.

6.3.2.2 Discrimination

Discriminators are used to extract the information from FM signals. Several circuit configurations are used to discriminate the FM signal and extract the information in an analog form. The details of these circuits are not important, but their performance in terms of linearity is critical to the operation of a high-quality data system. Any nonlinearity in the discriminator will appear directly as distortion or noise in the output.

6.3.2.3 Demodulation of pulse code modulation

A PCM signal most often contains digital information from several channels. This information must be separated and made available, still in digital form, for further processing (usually by digital computers). The common PCM signal has what is called a frame of data, which is in turn imbedded into a cycle of data. The frame is a repeating sequence of information from a selected set of channels. The cycle of data has at least one sample from each channel in the system. To extract the digital information, it is necessary to recognize the individual words in the data stream, as well as the beginning and ending of the data frame and cycle. This is achieved by using a word and frame synchronizer to identify and separate the digital information.

6.3.3 Commutation and sampling

Commutation is the process of time multiplexing (or time sharing) a single transmission or conversion channel among several data channels. The term commutation is derived from the electrical switch used in electrical motors to switch the current from one winding to another. Commutation is most often performed to make more effective use of expensive signal conversion and processing resources. Inherent in the commutation process is the sampling operation where "snapshots" are taken of a signal on a regular basis for subsequent input to a sampled data conversion process. The most common process is the A-to-D converter. To avoid data contamination as a result of the sampling process, it is important to adhere to specific rules regarding the ratio of sampling frequency to data frequency. When these rules are violated, the data are subject to an effect called aliasing in which high-frequency data masquerades (or operates under an alias) as lower frequency information. If this aliasing effect is permitted to occur, the high-frequency data are irretrievably intermixed with lower frequency data and there is no process that can separate the information. Obviously, aliasing can create serious problems for the data user. This is particularly severe because there are no clues that the data are contaminated, and incorrect conclusions may be drawn from the analysis. Chapter 7 of this volume discusses aliasing (as does Ref. 6.1) in more detail.

6.3.4 Analog-to-digital conversion

Analog-to-digital conversion is a key process in all flight test instrumentation systems. As used in this context, the A-to-D conversion may be accomplished in a level-to-frequency converter, the more conventional successive approximation or dual-slope converter, a so-called flash A-to-D converter, or a delta-sigma converter.

successive approximation or dual-slope converter, a so-called flash A-to-D converter, or a delta-sigma converter. All of these converters perform the function of converting information in analog form into digital information. The digital output may be a frequency or a conventional serial or parallel digital word.

6.3.4.1 Pulse-rate conversion

Probably the simplest A-to-D converter is the dc-to-pulse-rate converter. This device converts an analog input (usually in the form of an analog voltage) into an output frequency proportional to the magnitude of the input voltage. This is a frequency modulation technique, however, it results in a sampled signal that has digital characteristics and is therefore treated in this section. The advantages of this converter are its simplicity, high resolution, and continuous (free-running) operation. It is simple to convert back to an analog signal format using a simple digital counter. An advantage is that with proper conditioning, the output signal may be multiplexed with other signals to make good use of data channel capacity.

6.3.4.2 Commanded conversion (sampled)

The converters that require specific sampling operations are used to convert steady-state signals into digital form. These types of converters typically operate when a "convert" or command signal is sent to the converter. Then the device enters its conversion cycle to transform the analog input into a digital word (either serial or parallel format).

6.3.4.2.1 Successive approximation conversion

Figure 6.3-1 (see Ref. B1) illustrates successive approximation digital-to-analog (D-to-A) converters that use the popular R-$2R$ ladder circuit and are used as a feedback element in the A-to-D converter. The successive approximation A-to-D converter is illustrated in Figure 6.3-2 (see Ref. B1). The successive approximation A-to-D converter (as the title would indicate) encodes the analog voltage input through successive comparisons with ever-smaller voltage increments, until the final value at the specified resolution is achieved. The successive approximation process begins with a comparison of the input voltage with the half-scale converter range as a standard. If the input exceeds the half-scale level, the most significant bit (MSB) is set to one, and the half-scale voltage is subtracted from the input to develop a residual voltage in preparation for the next conversion step. If the input is less than the half-scale level, the MSB is set to zero and the unmodified input becomes the residual for the next conversion step. This process is repeated for the next conversion step, except now the comparisons are made with one-quarter of full scale. This process continues until the prescribed number of steps have been exhausted, at which time the conversion is complete. Commercially available successive approximation converters can typically provide resolutions from 8 to 16 bits at conversion times ranging from 10 μsec to 25 nsec. The successive approximation converter is the most popular converter in use today.

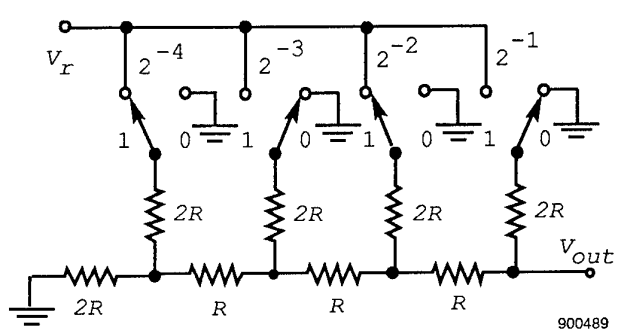

(a) R-$2R$ ladder network D-to-A converter.

Figure 6.3-1. Successive approximation D-to-A converters.

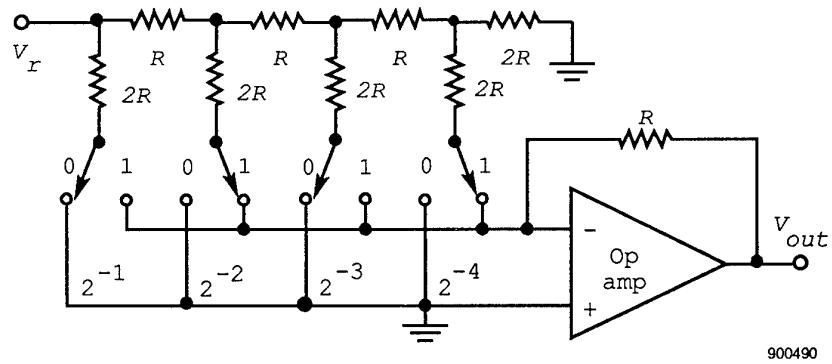

(b) R-$2R$ ladder network D-to-A converter with buffer.

Figure 6.3-1. Concluded.

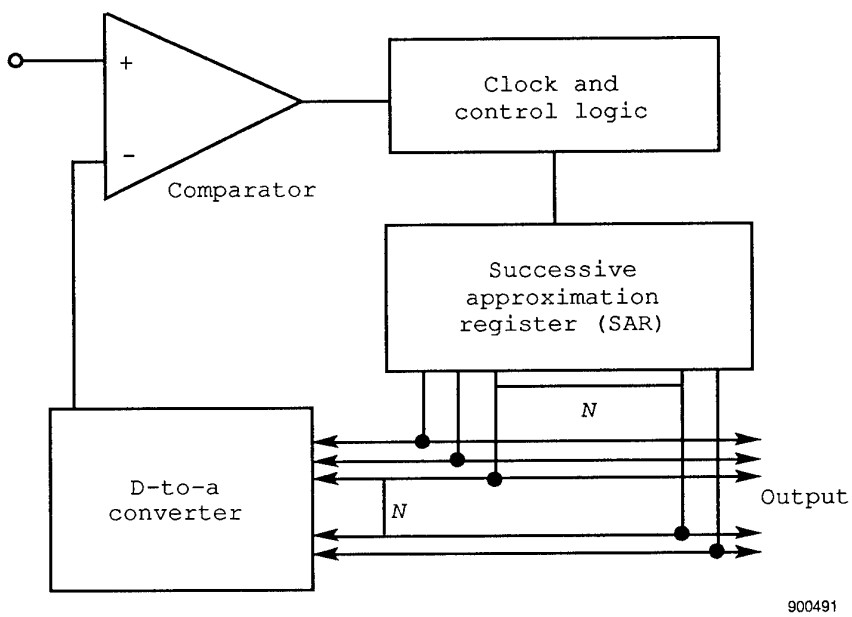

Figure 6.3-2. Successive approximation A-to-D converter.

It is vitally important that the input voltage not be allowed to change during the conversion process. A slight change in the input voltage during conversion potentially can result in very large conversion errors. Usually, a sample-and-hold amplifier is used ahead of the successive approximation converter to avoid this problem. High resolution (14 to 16 bits) successive approximation A-to-D converters have become feasible with the advent of laser-trimmed resistance networks.

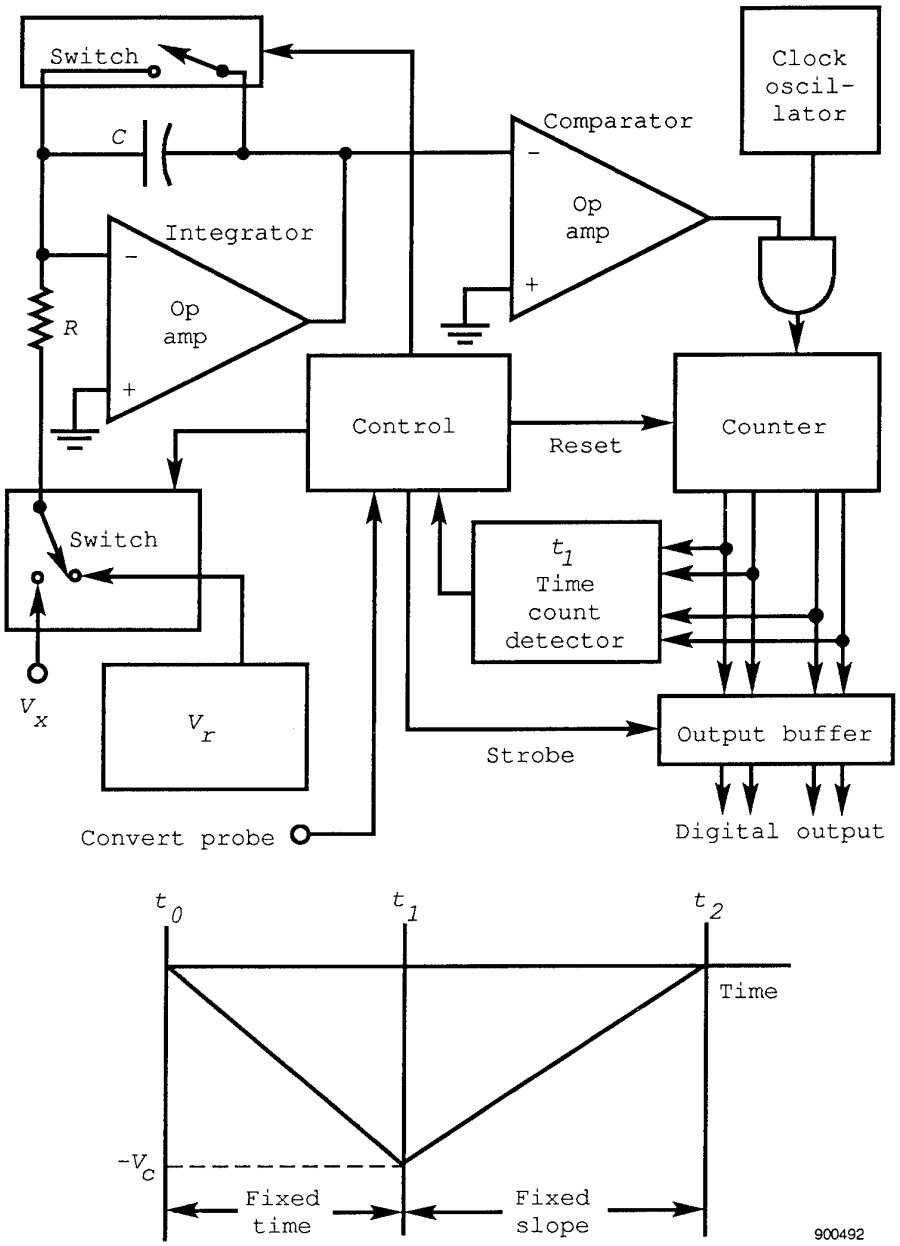

Figure 6.3-3. Dual-slope, A-to-D converter.

6.3.4.2.2 Dual-slope conversion (formerly called ramp conversion)

Figure 6.3-3 (see Ref. B2) illustrates the elements and the conversion process for the dual-slope converter. The dual-slope, A-to-D converter was one of the first high-resolution converters available commercially, and was used first in digital voltmeters. This device begins the conversion process by integrating the unknown input voltage for a known fixed interval. A second phase of the conversion process discharges the integrator by applying a precise reference voltage of the opposite polarity to the integrator while measuring the time required to complete the discharge.

$$\frac{1}{RC}\int_{t_0}^{t_1} V_x dt = \frac{1}{RC}\int_{t_1}^{t_2} V_r dt \tag{6.3-1}$$

$$\frac{V_x}{RC}(t_1 - t_0) = \frac{V_r}{RC}(t_2 - t_1) \tag{6.3-2}$$

$$V_x = \frac{V_r(t_2 - t_1)}{(t_1 - t_0)} \tag{6.3-3}$$

Equation (6.3-1) expresses the equality of these two phases, the left side of the equation shows the integrator charge process, and the right side shows the discharge. Evaluating the integral yields equation (6.3-2). This equation shows that the RC factor appears on both sides of the equation and thus the process depends neither on the absolute values of either R or C, nor on variations in either value from one conversion time to the next. Simplifying equation (6.3-2) yields equation (6.3-3) which shows that the unknown voltage is directly proportional to t_2 (since the reference voltage is known, as well as the fixed phase one integration time $t_2 - t_1$). These two conversion procedures (dual slope) taken together provide error compensation and together are the preferred conversion process when high-accuracy conversions are required.

6.3.4.2.3 Parallel (flash) conversion

Figure 6.3-4 (see Ref. B1) illustrates a flash A-to-D converter system. Where extremely high data conversion rates (up to 100 million conversions/sec or more) are required (for example, in airborne digital television signal conversions) the parallel or flash converter is used. These converters rarely offer higher than 8-bit resolution but perform the conversion. The flash converter performs its conversion in a single operation using an array of comparators and voltage references. Using as many as 256 reference voltages and voltage comparators, the input voltage is simultaneously compared with many reference voltages. The appropriate voltage range is quickly identified and encoded without successive conversion steps. This technique is effective only when extremely high conversion rates are required.

6.3.4.2.4 Delta-sigma conversion

Delta-sigma conversion and its derivatives are used only when relatively high conversion rates, coupled with low-accuracy requirements (such as might be associated with voice conversion) are needed. The basic delta-sigma conversion is a very simple "1-bit" PCM system which is sampled at a high rate. A single "flip-flop" drives a controlled voltage reference which (reflecting the state of the flip-flop) outputs either positive one-half of full scale or negative one-half of full scale. A single comparator driving a one-shot multivibrator compares the input voltage with the voltage reference, driving the flip-flop to the "on" state if the input is above one-half scale and turning the flip-flop "off" if the input is below one-half scale. If the existing state of the flip-flop is "correct" as specified previously, then the state is not changed. The successive conditions of the flip-flop provide a digital sequence that is the serial encoded analog signal. Delta-sigma A-to-D conversion has limited application in flight test, but serves quite well when the requirements of the program match the delta-sigma characteristics.

6.3.4.2.5 Oversampled conversion

An A-to-D conversion technique recently made practical through the availability of complex digital filters is known by various names: over-sampled, sigma-delta, and "bit stream." This class of A-to-D converters is characterized by oversampling at a low-order resolution, noise shaping, and digital filtering. Oversampling refers to the fact that the analog input signal may be sampled at rates as much as 1 million times (called oversampling ratio) the required Nyquist rate. Noise shaping concerns the effects of the A-to-D conversion, which adds a substantial amount of quantizing noise to the converted signal in the process of converting the signal to digital form at a very low resolution. The built-in digital filter removes the high level of the quantizing noise and serves to increase the resolution of the digital output by factors on the order of 100 times the oversampling ratio. As an example, a converter sampling with 1-bit resolution at a rate of 16 kHz can

provide an output sample 20 times/sec at a resolution of 16 bits. Another design sampling with 1-bit resolution at a rate of 4 MHz can provide an output sample 1000 times/sec at a resolution of 20 bits.

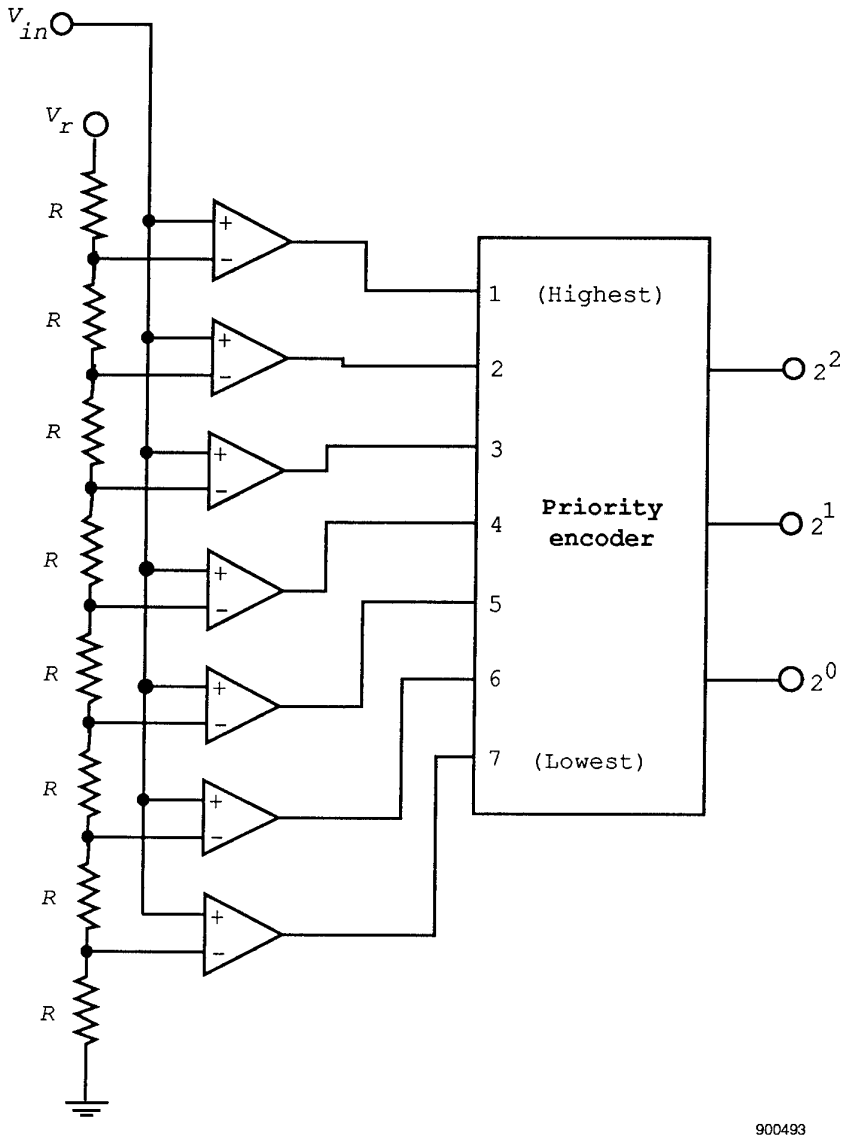

Figure 6.3-4. Flash A-to-D converter.

Figure 6.3-5 is a diagram of a sigma-delta A-to-D converter. The input analog signal is first applied to a summing junction which subtracts a feedback signal from the output. The summing junction output is applied to an integrator. The integrator output is digitized with a resolution of 1 bit, the 1-bit A-to-D output is then converted back to an analog form for application to the summing junction.

Among the advantages of this technique are

- Linearity and excellent differential linearity
- No or minimal antialiasing filtering requirements

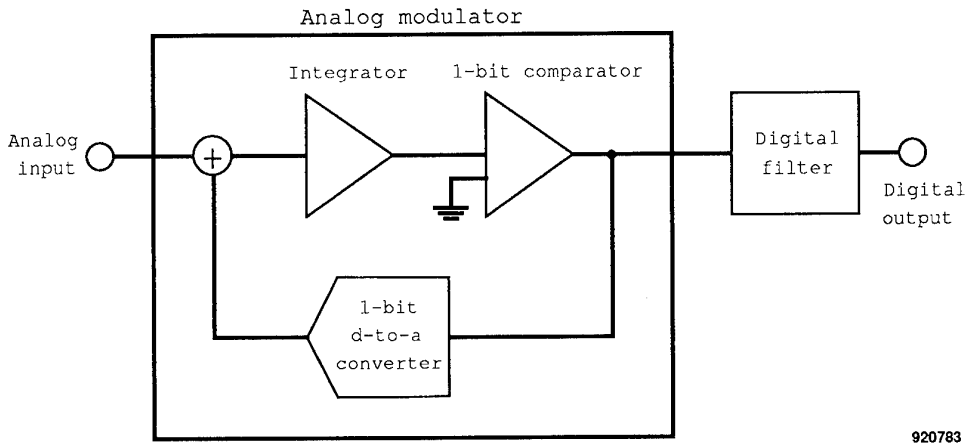

Figure 6.3-5. Sigma-delta A-to-D converter.

- No requirement for precisely matched analog components
- External sample-and-hold circuitry are not required
- Useful tradeoffs possible between resolution and sample rate

Most oversampling A-to-D converters use a 1-bit D-to-A converter in the feedback of the analog modulator. This converter switches between two reference points and the digital filter provides a straight-line interpolation between the two points and the 1-bit D-to-A converter. This technique provides nearly ideal linearity when the remainder of the converter design is of high quality.

The job of the digital filter is the removal of the unwanted out-of-band quantization noise. An attractive byproduct of this process is the removal of aliasing frequencies at multiples of the output sample rate. It is important to note, however, that spectral components in the analog input signal near the oversampled rate or integer multiples thereof are not attenuated by the digital filter. Depending upon the design of the digital filter, the converter may alias input signal components that are greater than half the output word rate. The application requirements combined with the converter characteristics must be fully assessed to determine the antialiasing needs. In some situations, no antialiasing filter is needed, while in other situations a simple resistor-capacitor filter may suffice. When the effects of the oversampling process are considered, it may be understood why the antialiasing filtering requirements may be reduced. As the input sampling rate is increased, the repeated spectrums created are spread out at increasingly higher frequencies and the antialiasing filters (should they be required at all) may have relaxed roll-off characteristics.

The digital filtering process effectively averages many samples taken over a period of time into a single output. Thus, it is not necessary to "freeze" the input signal with a sample-and-hold device (as it is with other A-to-D converter concepts) since the converter output represents an average or an "integral" of the input signal between the converter outputs. The oversampled converters have been described as a signal tracking conversion process, because the output of the D-to-A converter is driven to the value of the summing amplifier.

6.3.5 Digital processes

Digital processes in a flight instrumentation system conventionally have been limited to reformatting data or converting a sequence of coded information to a second sequence using a different code. For example, test information may be converted to a serial telemetry bit stream, or information may be extracted from a 1553B data bus (see Ref. 6.3) and interleaved with a serial PCM bit stream.

6.3.5.1 Code conversion

Code conversion takes place primarily in two situations. The first is where a nonprogressive code (for example, a Gray code from a digital transducer) must be converted to a more usable progressive code (for example, a straight binary code which "progresses" in a normal count sequence). The second situation is where a formatted serial bit stream contains information that must be extracted and merged into a second formatted bit stream. The first situation is a relatively simple and straightforward process, which often can be accomplished by the use of a combinatorial logic network or its equivalent. The second situation is substantially more complex. It may involve the decommutation and interpretation of a serial bit stream (bit, word, and frame synchronizers), storage, and subsequent interleaving into the second data stream.

6.3.5.1.1 Gray code conversion

The Gray code is a member of a class of nonprogressive digital codes which do not progress in a numerical order (either in an up or down counting order). The Gray code is used most often when a mechanical position must be converted into a digital word. The advantage of a nonprogressive code in this situation is that in every case when proceeding from one count to the next, only one bit changes state. This characteristic is useful, for example, in encoding shaft position either mechanically or optically (see Fig. 6.3-6). It is virtually impossible to align an array of mechanical switches or optical sensors so precisely that each switch change of state occurs at the same position. A progressive digital code often changes several bit states when moving from one state to another (for example, when moving from position 011 to 100 all bit states change). Perfect array alignment would find all bits changing simultaneously; however, slight misalignment would offer the opportunity for several incorrect intermediate states to create errors. For example, in moving from 011 to 100, the following sequence may occur: 011, 001, 101, 100. The intermediate states (001 and 101) will create misleading information if no protection is provided.

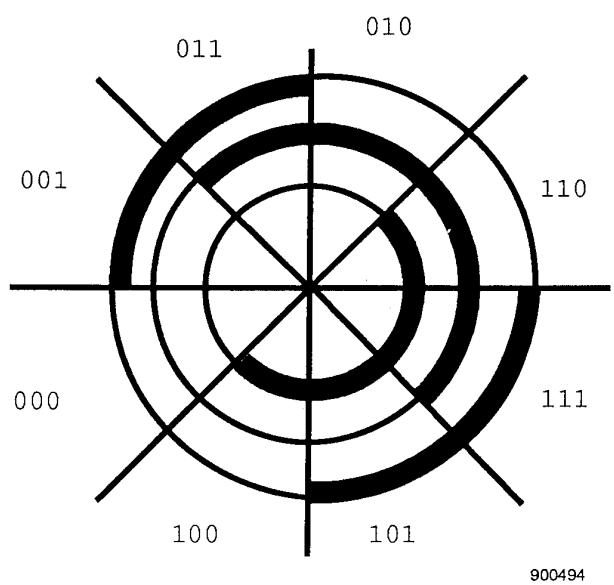

Figure 6.3-6. Rotary shaft encoder.

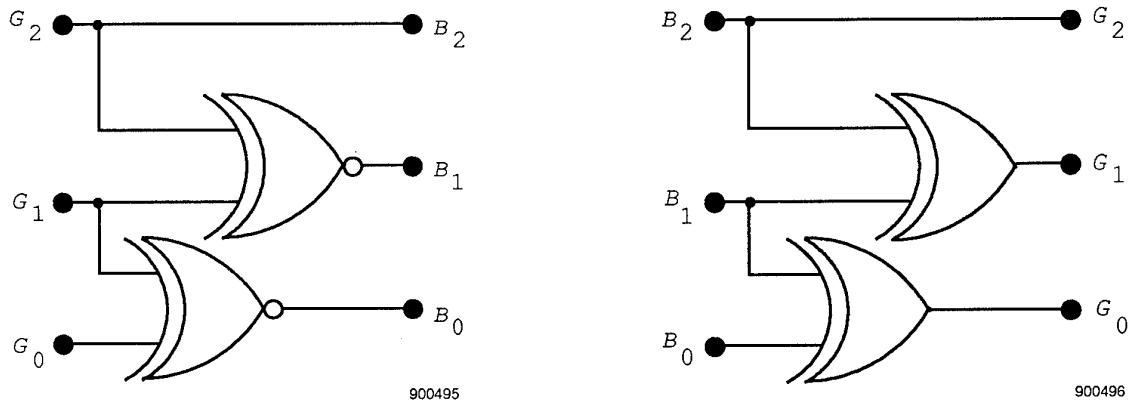

(a) Gray-to-binary code conversion. (b) Binary-to-Gray code conversion.

Figure 6.3-7. Gray code conversion networks.

Figure 6.3-7 illustrates logic networks for conversion of Gray code to binary code and binary code to Gray code. Provided here is an example of a simple 3-bit Gray code along with a corresponding straight binary code.

Gray code	000	001	011	010	110	111	101	100
Binary code	000	001	010	011	100	101	110	111

6.3.5.1.2 System specific to pulse code modulation conversion

A system specific code to PCM conversion is often required when an aircraft system bus contains information that is needed by the real-time telemetry system for ground display of aircraft information, for example, a 1553B (see Ref. 6.3) or ARINC 429 (see Ref. 6.5). In this case, it is necessary to extract the data from the system bus through the use of word identification hardware. This is no longer a trivial conversion and it may sometimes be accomplished most effectively through the use of microprocessor-based systems. In most cases, it is best to allow the conversion to proceed asynchronously, with the PCM system receiving the most recent information for inclusion. If the next PCM data window arrives with no "new" data having been received, the "old" data are supplied. This approach avoids the difficulties of synchronizing the operation of two systems when each has different requirements.

6.3.5.1.3 Encryption

Encryption is a process which is used to deny access to telemetered or recorded information to anyone not having access to the "key" used for the encryption process. The study of a data stream will reveal that it is highly correlated. It is a relatively simple process to determine the word and frame rates using computer-assisted analysis techniques. The encryption process is used to make the data stream appear uncorrelated or make it seem like "white noise" to the unsanctioned listener. The process also frustrates the computer-assisted analysis, or at the very least makes the cost unacceptably high (in terms of clock time and computer resource usage) to the unauthorized listener. It should be noted that it is very difficult to encrypt data in such a way that eventually the data cannot be decoded, given enough time and computer resources. The most common encryption technique is to generate a "pseudorandom" bit pattern by processing the binary data stream with a shift register having feedback to a summing junction. This concept is discussed in detail in Chapter 12. This processing creates a data stream with pseudorandom characteristics. A pseudorandom bit pattern is one that closely approximates the characteristics of white noise and effectively masks the data from the unauthorized listener. Decoding this encrypted bit stream requires that the authorized receiver be given access to the structure of the shift register feedback architecture, along with synchronization timing, so that the encryption process

may be reversed to provide clear code data for analysis. It should be noted that errors in the transmission of the encoded information create multiple errors in the reconstruction process.

6.3.5.2 Data compression

Data compression is an effective technique for "enriching" data streams for the purpose of reducing the bandwidth required for transmission. It is the nature of the compression process that the data no longer appear as regular samples, but emerge from the compression algorithm as intermittent samples separated from one another by random time intervals. It is necessary (usually as a part of the compression process) to provide time information as a part of the data. The inclusion of the "time tagging" in the data stream adds to the volume of data and negates a part of the benefits from the compression. This tradeoff must be assessed carefully during the selection of a compression algorithm, or the advantages of the use of data compression may be seriously compromised. The following data compression algorithms are in common use.

6.3.5.2.1 Pass on change

This is a conservative algorithm that does not sacrifice any data to the compression algorithm. Only data that are different from the prior value are transmitted. This algorithm is effective only where the data are mostly static. Little or no benefit will be realized by using this algorithm on highly dynamic data.

6.3.5.2.2 Floating window

This algorithm effectively reduces the resolution of the data by defining a window (range of data values) and passing only the data for transmission which fall outside the window. When data are transmitted, a new window is created and the process begins again. This algorithm is effective for steady-state data that have a dynamic component of little or no interest to the user.

6.3.5.2.3 Limit exceedance (fixed window)

This algorithm provides data only when the data exceed defined fixed limits. This process is useful when warnings are needed and corrective action is required when a parameter exceeds a preset maximum (or minimum). For example, when overshooting a temperature limit or pressure limit creates a dangerous situation.

6.4 CONCLUDING REMARKS

Signal conditioning is a critical aspect of the overall flight test instrumentation process. It must receive proper consideration to assure that the data quality provided by the transducers is maintained. The design of signal conditioning is not a trivial job, particularly when the accuracy and reliability requirements are of a high level typical of those found in a flight test instrumentation system. As indicated by the title of this volume, only the basic principles and a few illustrative examples are covered in this chapter on signal conditioning.

6.5 REFERENCES

Books:

B1. Malvino, Albert P., and Leach, Donald P., *Digital Principles and Applications*, Fourth ed. McGraw-Hill, New York City, NY, 1986.

B2. Strangio, Christopher E., *Digital Electronics: Fundamental Concepts and Applications*, Prentice Hall, Englewood Cliffs, NJ, 1980.

Technical Papers and Internal Documents:

6.1 Veatch, D.W. and R.K. Bogue, *Analogue Signal Conditioning for Flight Test Instrumentation*, AGARD-AG-160, Vol. 17, 1986.

6.2 Borek, R.W., *Practical Aspects of Instrumentation System Installation*, AGARD-AG-160, Vol. 13, 1981.

6.3 SCI Systems Inc., "Aircraft Internal Time Division Command/Response Multiplex Data Bus," MIL-STD-1553B, *Multiplex Applications Handbook*, Huntsville, AL, Sept. 1978.

6.4 Electronic Industries Association, "Electrical Characteristics of Balanced Voltage Digital Interface Circuits," EIA RS-422, *McGraw-Hill's Compilation of Data Communications Standards*, McGraw-Hill, NY, NY, 1978.

6.5 ARINC, *Mark 33 Digital Information Transfer System (DITS)*, ARINC Specification 429-9, Aeronautical Radio Incorporated, Annapolis, MD, 1985.

Chapter 7

TIME SAMPLED DATA AND ALIASING ERRORS

by

Donald W. Veatch*
21627 Old Town Road
Tehachapi CA 93561
United States

7.1 INTRODUCTION

The purpose of this chapter is to acquaint the reader with the origins of aliasing errors and how to intelligently minimize these errors. Since all time-sampled data are susceptible to aliasing errors, anyone who uses time-sampled data must be aware of the nature of aliasing errors and the techniques used to reduce their effects. Particular emphasis is placed on providing an intuitive understanding of aliasing and guidelines on how the sampling rate and the pre-sampling filter bandwidth are optimized to reduce aliasing errors.

Techniques are discussed which help reduce aliasing errors; unfortunately these techniques must be optimized for actual test conditions. The success of the optimization depends on the extent to which the data and noise spectra are known and since, in most flight test situations, the data and particularly the noise spectrum are not known or sometimes even repeatable, this optimization process must be continually re-evaluated.

The use of detailed mathematical analysis has been avoided since it has been observed that almost all of those who have read such material still have no practical appreciation of how to deal with aliasing errors. Though an attempt is made to simplify terminology as much as possible, engineers and data users should be at least somewhat familiar with Fourier analysis and the nature of frequency spectrums (there are many fine texts on Fourier analysis and spectrum analysis). Some of the other technical terms, e.g., such as those associated with filters, are explained in the cited references.

7.2 DEFINITION OF ALIASING

The dictionary defines an alias as an 'assumed name'. This essentially describes aliasing error. Aliasing errors occur when a periodic wave shape is time sampled and its basic frequency is greater than one-half the sampling rate. Basic frequency is here defined to mean that a 6-Hz sinusoid and a 6-Hz square wave have the same basic frequency. See Section 7.4 for further discussion of basic frequency. For example, a data signal composed of a 6-Hz and a 9-Hz signal is time sampled by a pulse duration modulation (PDM) or a pulse code modulation (PCM) system. If the sampling rate is 10 samples per second output signal reconstructed by the ground station data will be, respectively, a signal composed of 4-Hz and 1-Hz signals.

In other words, the 6-Hz and 9-Hz signals have now assumed new identities, or the aliases, of a 4-Hz and a 1-Hz signal, respectively. Without other sources of identification there is no way to prove that the aliased identity is not the true identity.

These types of error are called aliasing errors. The nature and causes of these types of errors are covered in more detail in the rest of the chapter.

7.3 ORIGINS OF ALIASING

Aliasing errors can be generated in any data which are time sampled. Time sampling of data is presently the most common multiplexing technique for the acquisition of airborne data.

Multiplexing of airborne data permits many channels of data to be mixed on a single recording or transmission channel. Time sampling of data channels is a multiplexing technique and is called time-division multiplexing. There are many ways to perform time-division multiplexing. The IRIG standards presently recognize only two forms of time-division multiplexing, PDM and PCM. Pulse-amplitude modulation (PAM) is no longer recognized by the IRIG standards as a technique for acquiring time-sampled data; however, it is still used for some applications.

Pulse-code modulation is the dominant multiplexing technique used in the acquisition of airborne and deep-space data. Two main advantages of PCM are its immunity to noise and the ease with which the data can be interfaced to modern computerized ground stations and airborne systems. PCM's excellent noise immunity over

* Retired from the NASA Dryden Flight Research Facility, Edwards, CA, USA.

long transmission paths is effectively used in the acquisition of deep-space data. Deep space and flight-test data acquisition systems favor PCM because the data are easily interfaced with modern ground stations which use powerful high-speed computers. The modern PCM systems are highly compact and economical due to the availability and low cost of large-scale integrated digital circuitry.

A source of time-sampled data, which are encountered with increasing frequency, is the data output of an airborne digital computer. The increased use of sophisticated airborne computer systems has made the use of data from these sources a necessity. Digital computer data output is always time-sampled data. While PCM sampling rates are normally periodic in nature, computer outputs are usually aperiodic. This absence of periodicity can lead to additional data reconstruction constraints which are not covered in this chapter.

In the above encoding techniques the time-sampled nature of the data is self-evident; however, data which are not normally considered to be time sampled can produce aliasing errors. This is illustrated, for example, when a frequency modulation (FM) data acquisition system uses zero-crossing detection techniques in the ground station demultiplexers. Normally the carrier frequency is so much higher than the highest frequency passed by the band-limiting filters that aliasing errors are not a problem; however, if an FM discriminator is being pushed to achieve maximum bandwidth and a zero-crossing discriminator is used in the data recovery, aliasing errors can be introduced.

7.3.1 Reduction of aliasing errors through system design

The first step toward minimization of aliasing errors in an instrumentation system is the construction of an instrumentation system that embodies the best possible design practices. To reduce aliasing errors particular emphasis must be placed on designing a data acquisition system which minimizes all noise* sources. These techniques are covered in other chapters of this volume and in the other AGARD Flight Test Instrumentation Series, see Refs. 7.1 and 7.2.

This aspect of aliasing-error reduction cannot be emphasized enough. In many well designed data channels the data information is the dominant signal and by far exceeds all the noise inputs. Of course this is not true for all data channels and, in addition, even in good data channels noise can inadvertently corrupt data. These deviations from desirable data justify the close attention to techniques for reducing aliasing errors.

7.3.2 Sampling rate and filters used as anti-aliasing tools

Once the design of the basic instrumentation system is completed the main tools available to the instrumentation engineer for controlling aliasing errors are the multiplexer's sampling rate, the pre-sampling filter, the reconstruction filter and the ground station data filters. The optimization of these tools for specific data and noise spectra is the main purpose of this chapter.

The most important of the above tools is the selection of the pre-sampling filter and the sampling rate, since these are used to prevent aliasing errors before they occur. The reconstruction filter and the ground station data filters are applied after the time-sampling process and therefore after the aliasing errors have already been created. Any technique used to reduce aliasing errors after they have been introduced into the data has limited usefulness.

The initial pre-flight selection of the sampling rates and the pre-sampling filters are based on reasonable estimates of the data and noise characteristics. This chapter deals almost exclusively with the use of sampling rates and pre-sampling filters as a means of controlling aliasing.

If after a flight where aliasing is known or suspected to have occurred, and before changing the sampling rate or pre-sampling filters, refer back to Section 7.3.1. Section 7.3.1 emphasizes that the basic instrumentation practices should be re-examined before increasing the complexity of the filter or raising the sampling rate. Careless instrumentation practices that permit mechanical or electrical noise to contaminate the data should be eliminated before considering higher sampling rates and more sophisticated pre-sampling filters.

7.4 UNDERSTANDING ALIASING ERRORS

The mathematical model of a time-division multiplexing system can be constructed by multiplying the data of Figure 7.1(a), shown as a sinusoid of frequency f_1, with a Dirac delta function of periodicity f_s (the Dirac delta

*In this chapter noise is defined to be any input to the data sampling device that is not of interest to the designated data requester. This means that the noise could actually be data which is not pertinent to the problem at hand. See Ref. 7.1.

function is a mathematical concept that constrains the sampling aperture to be infinitely short). The resultant series of time-sampled data points is shown in Figure 7.1(b). The wave form of Figure 7.1(b) is a series of infinitely narrow pulses whose amplitude represents the amplitude of the data at the time the sample was taken. In the example of Figure 7.1(a) and 7.1(b) the sampling rate (f_s) is four times the data frequency f_1. Figure 7.1(c) illustrates the wave form (f_{R1}) which is reconstructed by the ground station. In this example the reconstructed frequency, f_{R1}, is equal to the input frequency, f_1.

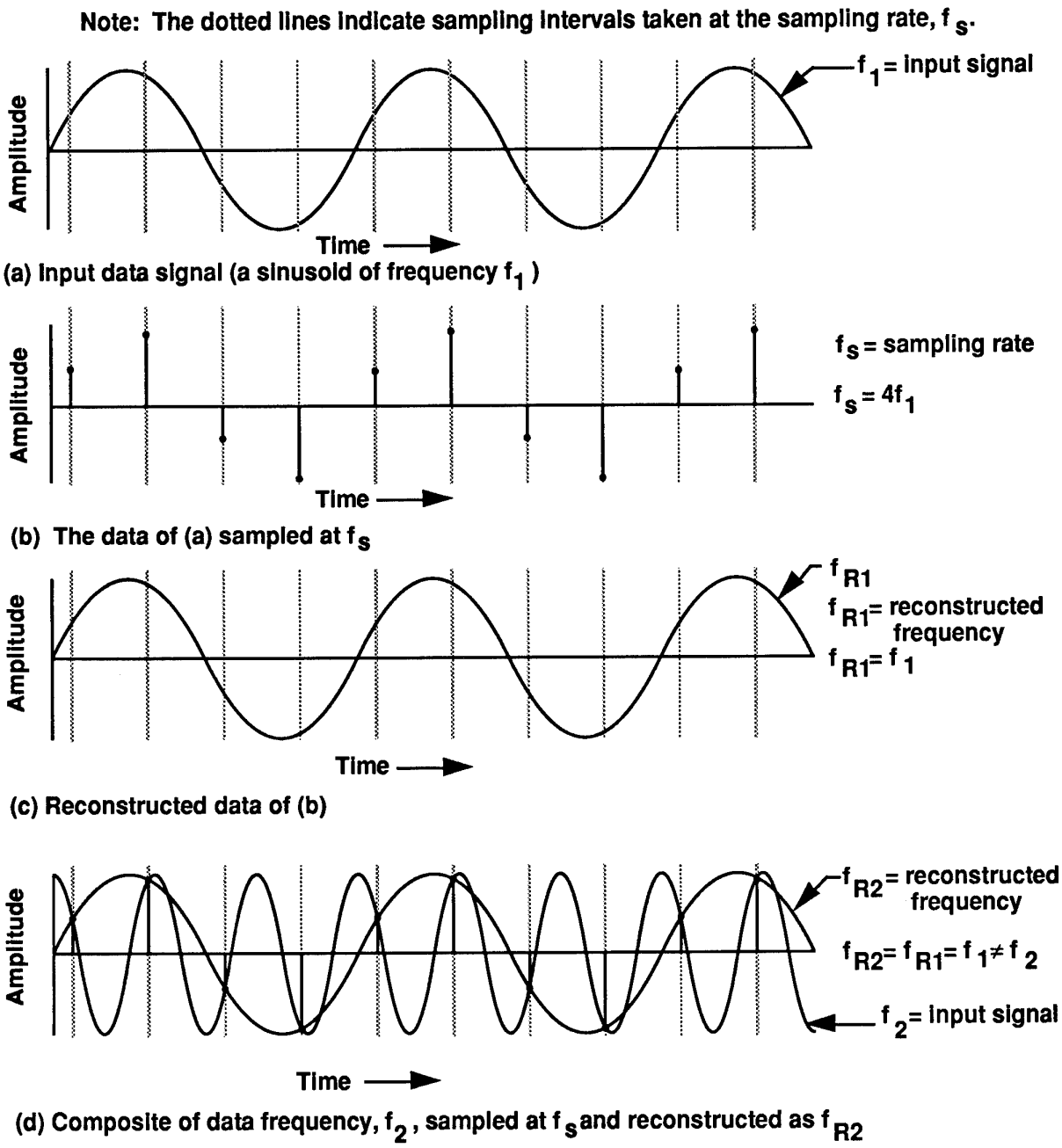

Figure 7.1 Effects of time sampling on two different frequencies.

The reconstruction process assumes that there are certain constraints on what happens between samples. As can be seen from Figure 7.1(b) nothing is known about what happens between the data samples. The constraint

imposed by sampling theory is that there can be no frequencies in the sampled data equal to or greater than one-half the sampling rate (f_s).

Figure 7.1(d) is a composite curve which illustrates what happens when a data frequency, f_2, where $f_2 = 0.75 f_s$, is time sampled. The reconstructed frequency (f_{R2}) is identical to f_1 of Figure 7.1(a) and not the actual input frequency (f_2). Without additional information the actual data frequency (f_2) is irrevocably lost.

When sampling data it is very important to understand the concept of a wave shape's basic frequency. For example Figure 7.1(a) if f_1 had been a square-wave signal of the same basic frequency, instead of a sinusoidal wave form, the reconstructed wave form would have been a square wave signal, f_{R1} (where $f_{R1} = f_1$), with significantly rounded corners. Aliasing of time-sampled data is insensitive to the high-frequency Fourier components of a complex wave form. In the example of the square-wave signal, higher sampling rates would merely more closely define the transition points. This defining of the transition point can be very important for accurately determining the time of occurrence of a step input. Likewise a transient pulse can be completely lost between samples, see Section 7.9.4.

Thus while square waves, step inputs, pulse transient inputs, etc., have extensive Fourier frequency components which can be greater than one-half the sampling rate, these actual frequency components of a complex wave form do not cause aliasing. What does cause aliasing is any periodic sinusoidal, triangular, square wave, etc., signal whose basic (i.e., fundamental) frequency exceeds one-half the sampling rate.

The importance of the previous discussion will become obvious when the anti-aliasing filter is discussed. With filters the high-frequency Fourier components of a complex wave shape are very important and can cause all sorts of mischief if neglected, see Section 7.6. It is amazingly easy, when working back and forth between sampling theory and filter theory, to become confused on these points.

Figure 7.2 is an attempt to help visualize aliasing. In this figure any time-sampled frequency which is above the Nyquist frequency (f_N) is shown to be reconstructed as an output frequency which is always equal to or less than f_N. The Nyquist frequency is defined as one-half the f_s. If the sample width is very small compared to the frequency being sampled, i.e., approaching the Dirac delta function assumed above, the relationship shown is maintained almost indefinitely.

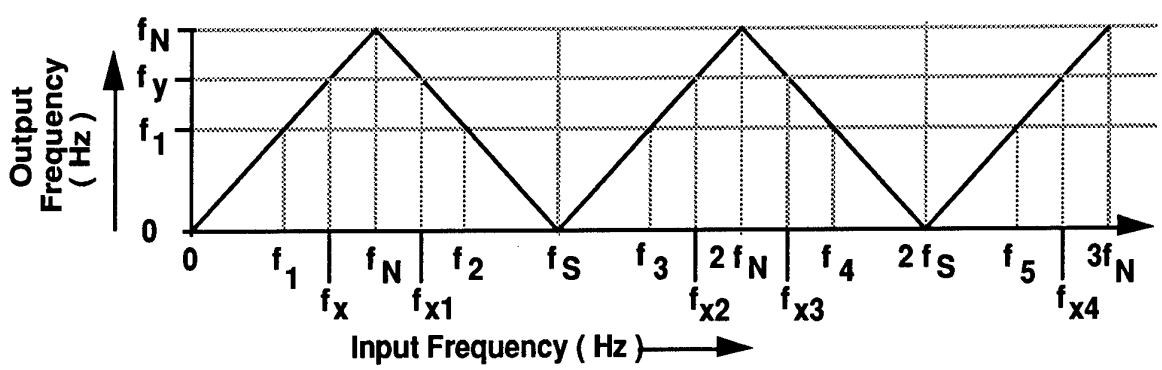

Where: $2f_N = f_s$
f_N is theNyquist frequency
f_s is the sampling frequency

Figure 7.2 Aliasing of a sinusoidal input signal as a function of the sampling frequency.

In Figure 7.2, f_1 is the same data frequency used in Figure 7.1(a) and f_2 is the data frequency used in Figure 7.1(d). As can be seen, Figure 7.2 predicts that both frequencies will be reconstructed as the same output frequency. From examination of Figure 7.2 it can also be seen that there are many frequencies higher than f_1 and f_2, e.g., f_3, f_4 ... , that will also alias to appear as f_1 in the reconstructed data.

In Figure 7.2 an output frequency f_y is shown. This frequency f_y can be any frequency between zero and f_N (where $2f_N = f_s$). If a horizontal line is drawn out from f_y then wherever this horizontal line intercepts the saw-tooth wave form of Figure 7.2 these are the input frequencies that can generate the reconstructed output wave form f_y. The frequency f_x would be an unaliased input frequency, while the frequencies that could generate aliases of f_y would be $f_{x1}, f_{x2}, f_{x3}, f_{x4}, \ldots$. As explained all the aliased frequencies are input frequencies that are greater than f_N.

Figure 7.3 shows how an ideal time-sampled data signal would look in the frequency domain. In this and all spectral plots that follow, the negative half of the frequency domain, a mirror image of the positive plot shown, has been left out for simplicity. In Figure 7.3 all the data and noise are between f_o and f_c and since no data frequencies exist at or above f_N there are no aliasing errors. This figure shows the data images generated by the time-sampling process.

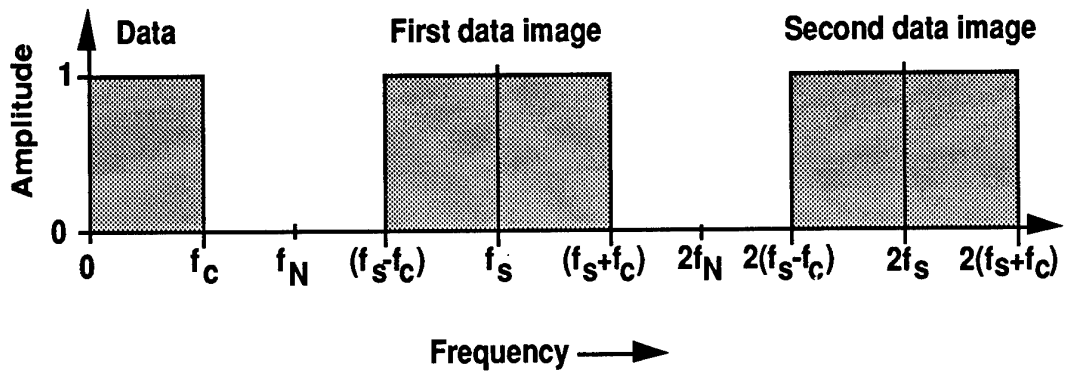

$f_s = 4f_c$ = sampling frequency
$2f_N = f_s$
f_c is the filter cut-off frequency

Figure 7.3 The frequency spectrum of a time-sampled ideal transducer output.

Figure 7.4(a) is the amplitude response of a second-order transducer, such as an accelerometer. All transducers behave like filters and when excited by an acceleration the accelerometer behaves like a second-order filter, i.e., a –12 dB per octave eventual attenuation after its cut-off frequency, and thus is called a second-order transducer.

This accelerometer is now excited by an input acceleration whose spectrum resembles white noise and Figure 7.4(a) is the resulting output frequency spectrum. When these data are time sampled, the frequency-domain plot shown in Figure 7.4(b) is generated. This figure shows the data images generated by the time-sampling process; however, these images overlap each other. This overlap of the data image into the data spectrum, i.e., below f_N, is what produces the aliasing errors.

Figure 7.4(b) shows how the higher order images produce aliasing; any portion of the images which extend below f_N (shown by the shaded areas) are aliased frequencies and contribute only noise to the bandwidth between 0 and f_N. Note that the errors depicted by the shaded areas have not been totaled in with the data bandwidth as yet, but when they are they will change the overall shape of the reconstructed data spectrum.

Theoretically every image contributes aliasing noise to the base band; however, in this example the noise contributions of images higher than the first contribute comparatively little noise when compared to the contributions of the first image. It must be noted here that with other distributions of data and noise, to be discussed later, the higher frequency-domain images can produce significant aliasing noise contributions.

When the data are sampled by a Dirac delta function the higher order images continue, as shown, at the same amplitude out to infinity. When a finite sample width is used the higher order images are reduced in amplitude as the image order increases, which further reduces the aliasing noise contributions of the higher order images.

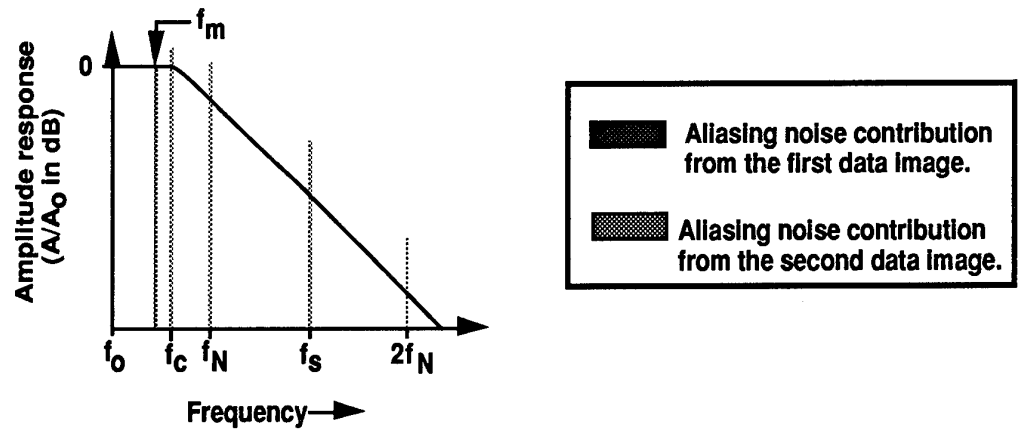

(a) The output amplitude response of an accelerometer excited by a white-noise acceleration. Included are the pertinent sampling and data parameters.

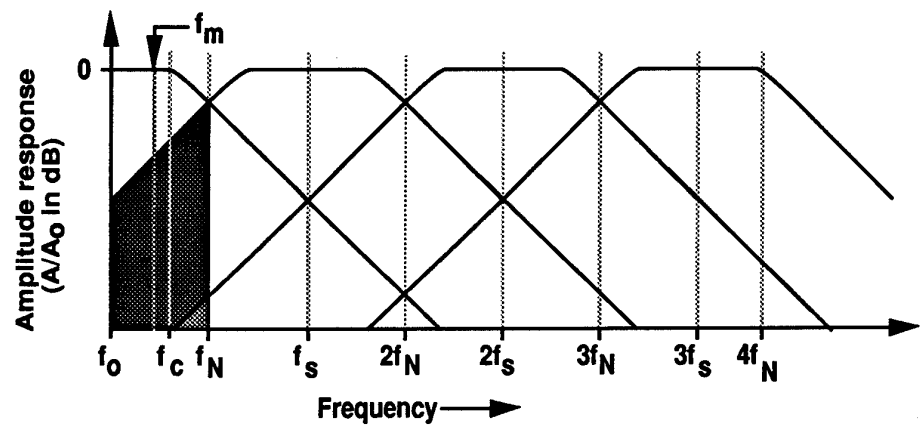

(b) Frequency-domain representation of the sampled data of (a)

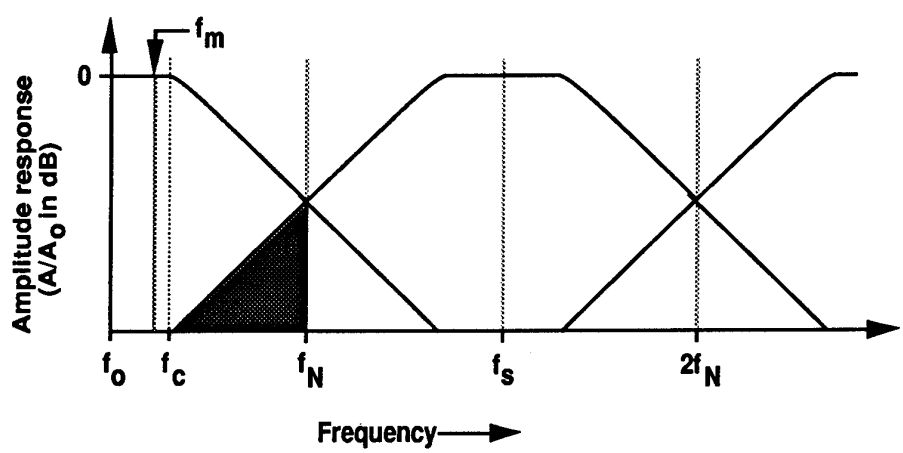

(c) The effects of doubling the sampling rates of (a) and (b) in the above example.

Where: f_m = maximum data frequency of interest

f_c = cut-off frequency of the anti-aliasing filter

Figure 7.4 Using frequency-domain plots to illustrate how aliasing errors are generated.

It is important to notice that when white-noise excitation is used as in the example of Figure 7.4, the greatest aliasing error contributions are at the highest frequencies (as shown in Fig. 7.4(b) by the shaded areas below f_N.). Figure 7.4(c) illustrates how just doubling the sampling rate can significantly reduce the aliasing noise in the data bandwidth. Note that the white-noise model is the model which is often used to derive mathematical models for specifying sampling rates and filter bandwidths. This particular model typically produces much higher sampling rates than other models as will be discussed in Section 7.9.3 when the advantages and disadvantages of various mathematical aliasing models are discussed.

The conditions described in Figure 7.4 are seldom encountered in flight-test data acquisition situations. The main advantage of the white-noise analysis of Figure 7.4 is that it provides one of the best ways to visualize the effects of aliasing noise. Even more importantly, this model can be analyzed mathematically to provide a precise determination of aliasing errors; as precise as the assumptions that have to be made about what constitutes an error in the resulting data will permit.

Figure 7.5 illustrates an unfortunate consequence of the typical sampling rates and the 400-Hz aircraft power frequency. It is an example of how high-order images can contribute significant amounts of aliasing noise to the reconstructed signal bandwidth. The distribution of data and noise depicted in Figure 7.5(a) is used to represent a typical noise distribution in an instrumentation data channel with considerable 400-Hz noise pick-up. In this figure f_s has been arbitrarily selected to be four times the maximum frequency of interest, i.e., $f_s = 4f_m$. A noise spike exists at $2f_s$. This could well be a data channel with an f_m of 50 Hz and an f_s of 200 samples per second. In this case the noise spike could be caused by an inadvertent inductive or common-ground coupling of the 400-Hz ship's electrical power into the data. For a transducer that produces low-voltage output signals, such as produced by strain gauges and many other flight data sensors, a 400-Hz noise spike can be significantly larger than even full-scale data.

Figure 7.5(b) depicts the first image of the time-sampled data channel. Only the information between 0 and f_N will exist in the reconstructed data. As can be seen, the first image contributes some noise which is eventually added to the data channel information in the interval of 0 to f_N.

Figure 7.5(c) depicts the second image of the time-sampled data. Now this illustrates the case where the higher order images can produce significant noise. In this case the noise spike appears as a quasi-static signal in the data output. This type of noise signal can be particularly hard to isolate and identify in corrupted data since the noise can appear to be steady state (or almost so, since most 400-Hz aircraft power is not rigidly frequency regulated). If 400 Hz is likely to be a problem it is desirable to select a sampling rate which causes the aliased frequency to show up as some easily identifiable frequency. Using this precaution alerts the data user to a possible aliasing error problem. The solution to this problem should be to eliminate as much of the electrical interference as is possible before changing filters or sampling rate.

Most of the time noise spikes will not appear at even multiples of the sampling frequency as shown in Figure 7.5. These noise spikes can also produce aliasing errors. On the X-15 rocket research aircraft a structural resonance of 13 Hz was identified as a 3-Hz resonance when the sampling rate of a PDM system was 10 Hz. Fortunately, oscillograph recorders permitted the actual frequency to be identified as 13 Hz.

In several actual cases a center-of-gravity (c.g.) accelerometer was mounted on a shelf which had high-frequency resonances. Even though the amplitude of the shelf displacement was small, an accelerometer amplifies such displacements as the square of the frequency, thus producing considerable output. This output was aliased into the low-frequency c.g. data. The solution was to make the shelves much more rigid.

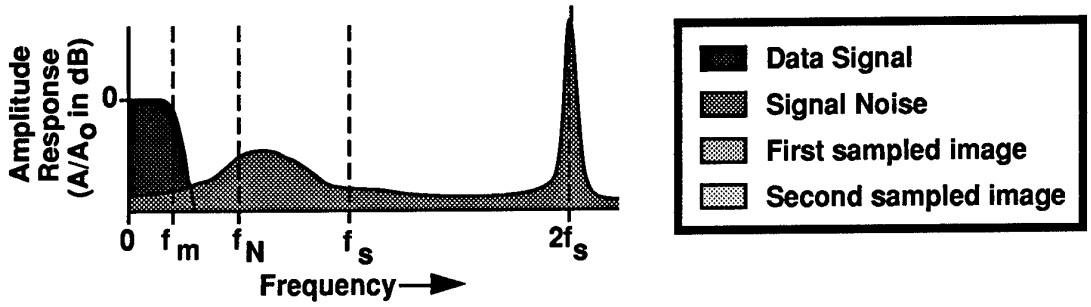

(a) The data and noise spectrum of a data channel.

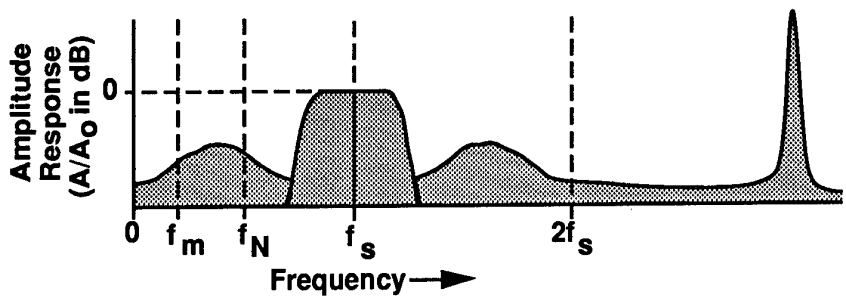

(b) The spectrum of the first image of the time-sampled data channel.

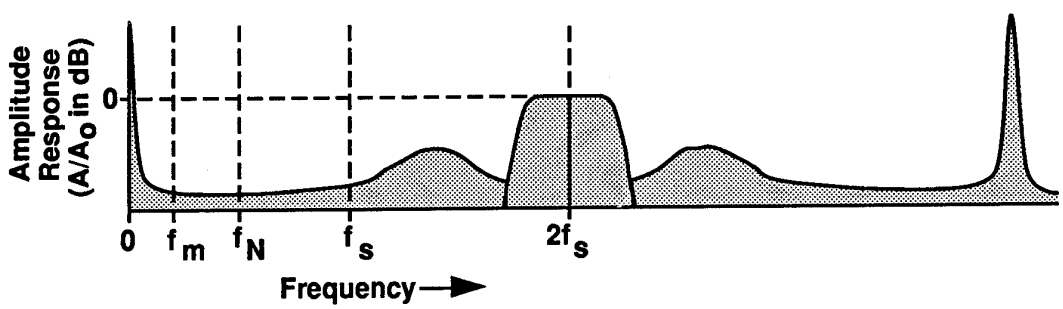

(c) The spectrum of the second image of the time-sampled data channel illustrating how its noise spike can produce a quasi-static signal in the data.

Figure 7.5 How the data images overlap the data channel and produce aliasing.

7.5 SAMPLING RATES AND ALIASING

What is the optimum sampling rate? This has been the subject of much controversy in various texts on aliasing. Information theory sets the lower limit on the sampling rate while system limitations set the upper limit on sampling rates.

Aliasing theory sets the lowest sampling rate, since any frequency above f_N is aliased into the output as a new frequency equal to or less than f_N. Since the Nyquist frequency is defined to be one-half the sampling rate, it is obvious that the sampling rate must be at least equal to or greater than twice maximum frequency of interest to the data user. The maximum frequency of interest to the data user will be called f_m.

Now the term "maximum frequency of interest" to the data user also causes confusion. The maximum frequency of interest (f_m) is often assumed to be synonymous with the cut-off frequency (f_c) of the anti-aliasing filter. In actual practice it would be very undesirable to place the highest frequency of interest at f_c, particularly if there

were really significant amounts of data near f_c. The f_c of a filter is a point where the amplitude response and phase response of the filter are changing rapidly. The filter parameters are not as stable at this point as desired.

As a general rule f_m should be 0.6 to 0.8 of f_c. The selection of the ratio depends how much important data are near f_m and the quality of the anti-aliasing filter. A less stable filter requires more latitude. If important data are near f_m then a greater protection margin must be provided. The unfortunate side effect of this rule is that it produces higher sampling rates than the simple $f_m = f_c$.

Sampling rates are usually specified in terms of f_c and this is appropriate since f_c establishes the point where noise will be decreasingly able to be aliased back into the data. The important thing to remember is that the f_m is not to be carelessly set equal to the filter f_c.

The upper limit on the sampling rate is often a system limit. For example, the bandwidth of the airborne transmission or recording system limits the amount of data and how often it can be sampled. High sampling rates and many data channels can easily overload recording and transmission bandwidths.

On any reasonably large instrumentation system a main consideration is the data reduction time. Using a sampling rate that is 100 or 1000 times the highest frequency of interest produces an intolerable load on the data processing system when many channels are involved.

Some data have justified sampling rates which were two times the highest f_m when the data were to be used for statistical analysis. In the author's opinion this is extremely risky.

Commonly a sampling rate of four to five times the filter f_c is recommended. This recommendation is usually based on the attenuation characteristics of real fairly simple filters and certain assumptions about the data (discussed in Section 7.9.1).

Mathematical analysis based on white-noise type input signals, such as that discussed in Reference 7.3 and an unpublished paper by L. W. Gardenhire, typically recommend sampling rates that are much higher than four to five times f_c.

Gardenhire, for example, recommends a sampling rate in excess of $1000 f_c$ to achieve a 1% accuracy when using a first-order transducer with a fourth-order anti-aliasing filter.* For a second-order transducer used with a fourth-order filter Gardenhire recommends sample rates of about $10 f_c$ to achieve 1% data accuracies.

In actual practice some aircraft data acquisition systems have been flown without any anti-aliasing filters in the majority of the data channels. In many cases flight-test vehicles have been flown with most of the data channels using simple first-order filters and these flight-test programs have been highly successful. On the other hand there are innumerable documented cases which are horror stories of data which have been completely corrupted by aliasing errors.

Then what is the optimum sampling rate? The answer, of course, is that the sampling rate must be based on the nature of the data and noise spectrums. This will be discussed in specific detail later in Section 7.9, Anti-Aliasing Techniques.

7.6 FILTERS AND THE ERRORS THEY INTRODUCE

Filters are one of the main tools used to reduce aliasing errors. Unfortunately filters also introduce errors into the data. These errors are different from those introduced by aliasing and can cause quite significant data errors. The filter parameters that are of the most interest are amplitude response, phase response, and group delay. The terms group delay and time delay are often used interchangeably.

In this chapter only the low-pass filter will be discussed, since it is the most commonly used anti-aliasing filter. A band pass filter is used when it is desirable to remove the dc response of some transducers. Sometimes a band-reject filter will be used in the data band pass to remove a specific noise frequency spike. This is normally an undesirable practice, since the phase distortion introduced by the band-reject filter causes large phase nonlinearities in the data pass band.

* See Ref. 7.1 for a more complete definition of "orders of filters and transducers." For example, a second-order Butterworth filter would approach an eventual attenuation of −12 dB/octave. Each 'order' is equivalent to −6 dB/octave. A transducer also behaves like a filter and therefore can be classified by its order also. Advanced complex filters often are not as simple as in the above examples.

Unlike aliasing errors the errors introduced by filters can theoretically be removed in the ground station if the extra time and effort is justified. This is accomplished by first determining the filter's transfer function and using digital techniques to correct the data. This data correction process will not remove any aliasing errors that have been introduced into the data by the sampling process; therefore, the results will still be in error depending on the amount and nature of the aliasing errors.

To illustrate the nature of the errors introduce by filters, first consider the ideal low-pass filter's amplitude response shown in Figure 7.6(a). This filter has a pass band of 0 to f_c, where the filter's cut-off frequency is f_c. This filter passes all frequencies in its pass band, without amplitude modification, and completely rejects all frequencies outside its pass band.

This ideal filter has a linear phase shift in the pass band, and since it does not pass any frequencies outside its pass band the phase shift outside the band pass is not important. Figure 7.6(b) illustrates the phase response of this ideal filter.

If a square-wave voltage wave form is applied to the filter of Figure 7.6 it provides the reader considerable insight into the distortions that filters introduce into transient data and how best to avoid these distortions if they are important. A square wave is used since it approximates one of the more complex wave forms encountered in flight-test data acquisition, the step input.

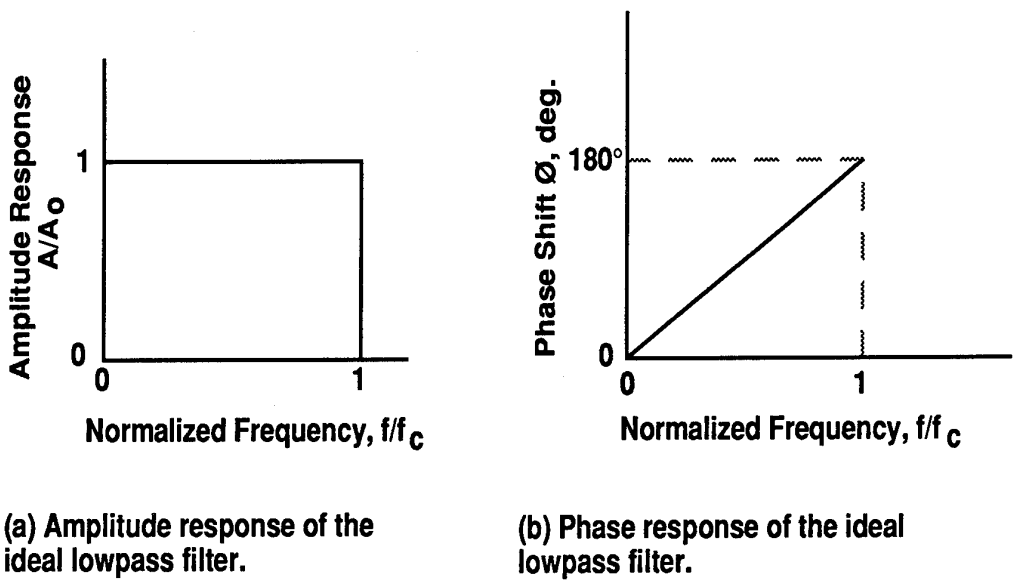

(a) Amplitude response of the ideal lowpass filter.

(b) Phase response of the ideal lowpass filter.

Figure 7.6 A proposed ideal filter.

A square wave can be represented by a Fourier series and is composed of a fundamental frequency and an infinite series of odd harmonics. The mathematical equation for the Fourier series for a square wave is shown in equation (7.1).

$$\text{Square wave} = 2\sum_{n=1}^{n=\infty} \frac{\sin(2\pi nf)}{n} : \text{where all } n \text{ are odd integers} \tag{7.1}$$

A square-wave input signal of 1.0 Hz is applied to the ideal filter of Figure 7.6. For the purposes of this example the filter's cut-off frequency is f_c and the phase shift is 180° at f_c. The resultant output wave shape is shown in Figure 7.7.

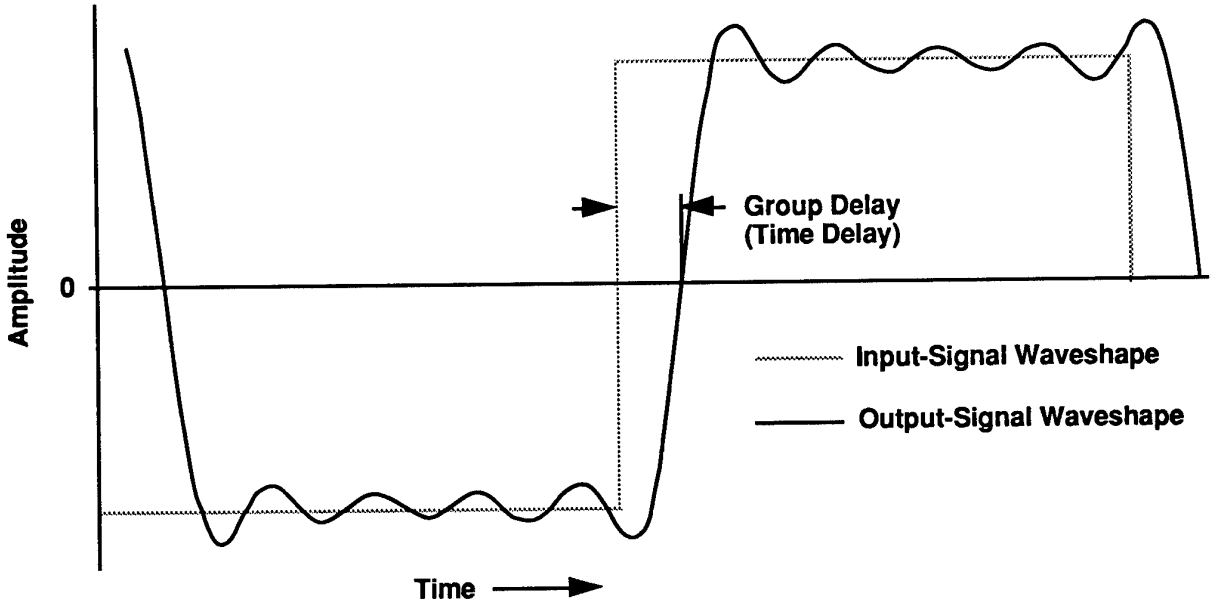

Figure 7.7 A 1-Hertz squarewave input signal (dotted-line curve) and the signal output after passing through the ideal 10-Hertz filter of Figure 7.6.

The filter passes the square wave's fundamental frequency, 1 Hz, and the next 4 odd harmonics, i.e., 3, 5, 7, and 9 Hz. It passes all five of the first Fourier series frequencies unchanged in amplitude, but shifts the frequencies in phase as specified in Figure 7.6(b). Notice that the filtered wave shape differs markedly from the filter's input wave shape and exhibits a group delay relative to the input of 1/20th of a Hertz.

The amplitude characteristic of Figure 7.6(a) produces a loss of high-frequency information, that is, all harmonics higher than 9 Hz, and thus changes the shape of the complex signal. A linear phase shift as a function of frequency produces a constant group delay.

An actual filter has an amplitude response which attenuates the amplitudes of the frequencies in the pass band more and the amplitude of the higher harmonics less abruptly than the proposed ideal filter. See Figure 7.8 for two common second-order filter amplitude responses compared to that of the ideal filter postulated in Figure 7.6(a).

The phase shifts of the Bessel and Butterworth filters of Figure 7.8 are never truly linear in the pass band. This nonlinear phase shift versus frequency characteristic causes wave shape distortion. It shifts the phase of each individual frequency of the Fourier series by a different amount and thus produces a new wave shape (note that an ideal all-pass linear-phase-shift circuit would produce an output which differed from the input by only a constant group delay).

If many data channels are used to compare broad-spectrum input signals then every data acquisition channel must have the same phase characteristic (and, of course, the same amplitude response) or it will make comparisons difficult if not impossible. Different filters with different phase responses, such as a Bessel and Butterworth filter, can make complex wave forms look entirely different. Even if the same type of filters are used, but each of two different orders, the group delays and distortions can be significantly different. This is a very important point when many channels must be compared and is too often overlooked.

$$E_{rms} = \sqrt{\frac{1-(\cos\beta)^2}{2}} \tag{7.2}$$

Reference 7.4 uses equation (7.2) to calculate the maximum error (E_{rms}) of a complex wave form. The term β is the maximum deviation of the filter's phase response from linear phase in the filter's pass band. The equation is used to calculate the maximum observed error and the actual error is dependent on the wave shape.

Reference 7.4 states that the error of a typical complex wave shape is usually about one-half the error indicated by equation (7.2) (note: a simple sine wave is not a complex wave form and therefore does not exhibit the error of eq. (7.2)).

As an example, a sixth-order Butterworth low-pass filter has a maximum phase error in its pass band of 22°. Thus a complex wave form passed through this filter can exhibit a maximum error in observed amplitude, E_{rms}, of 26.4% due to the phase distortions alone.

Equation (7.2) shows that when a complex wave shape, such as a step input, an impulse input, or a doublet, is to be analyzed it is crucial to have a linear phase shift. Furthermore if the effects of this disturbance are to be analyzed on many channels it is important that all involved channels have the same overall transfer function. Often the filter's transfer function is the dominant system transfer function; however, as an example an accelerometer's second-order transfer function can overwhelm that of a simple first-order anti-aliasing filter.

Only the digital finite impulse response (FIR) filters can be made to exhibit a truly linear-phase response in its pass band. FIR filters, for reasons to be covered later in Section 7.8, are difficult to implement for many airborne applications.

The Bessel filter is an easily implemented discrete-component filter which has very good phase response linearity. Reference 7.4 points out that a fourth-order Bessel filter has a maximum phase error of only 0.17° in its pass band. Unfortunately the Bessel filter has a very poor pass band amplitude response. See Figure 7.8 for a comparison of the amplitude responses of a second-order Bessel and a second-order Butterworth filter. Despite its very poor pass band amplitude response the Bessel filter is normally the best anti-aliasing filter for transient data. The explanation for this is that decreasing the amplitude of a broad-spectrum wave form's higher harmonics reduces the sharp detail of the wave form, while a nonlinear phase response actually changes the wave form's shape.

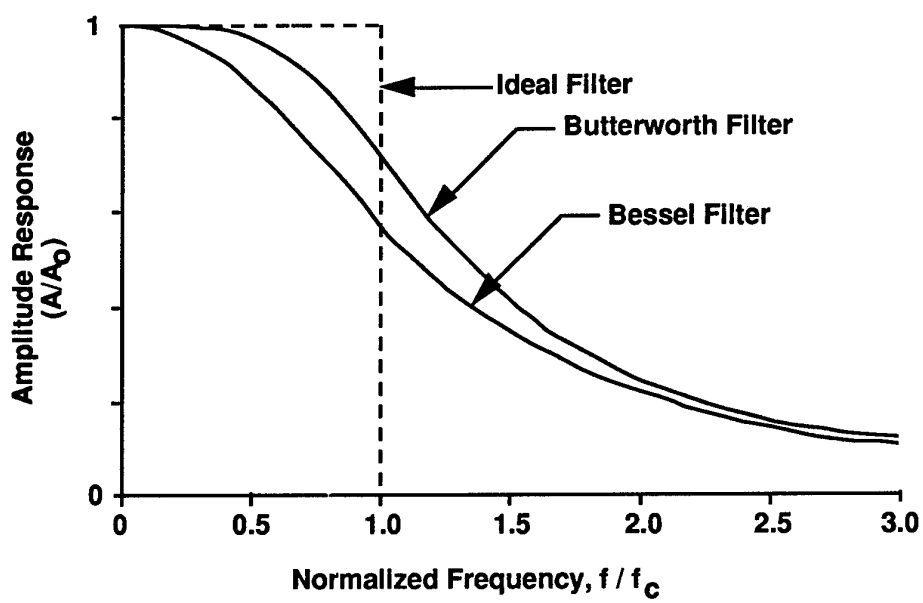

Figure 7.8 An ideal filter, a two-pole Bessel filter and a two-pole Butterworth filter compared.

With classical filters such as the Bessel, Butterworth, and Chebyshev filters, increasing the rate at which the filter attenuates the signal outside the pass band also increases the filter's phase-response nonlinearities. For example the phase error for a second-order Butterworth filter is approximately 4°, a sixth-order Butterworth filter has a 22°-error and an eighth-order Butterworth filter has approximately a 31°-error. For comparison an eighth-order 2-dB Chebyshev filter has a 94°-phase error in its pass band.

Loy, in Reference 7.4, provides a very useful comparison of linear-phase FIR filters and classical filters. He estimates that a Butterworth filter with the same transition width, i.e., the bandwidth required to go from 5%

to 95% attenuation, as a linear-phase FIR filter will require about one-half the time delay. Thus the FIR filter's linear phase is acquired by sacrificing time delay.

For a given level of attenuation per octave the Bessel filter has more attenuation in its pass band than the Butterworth filter, and the Butterworth filter has more attenuation in its pass band than the Chebyshev filter. The phase-shift errors discussed above show that, with these classical filters, decreasing the signal attenuation in the pass band also increases the phase nonlinearities.

Reference 7.4 details two advanced fourth-order filter designs which improve pass band filter response while maintaining reasonable phase errors. These fourth-order filters have good pass band response and phase errors of 1.8° and 4° respectively. The filter with a phase error of 4° has a particularly desirably flat pass band response and is shown in Figure 7.9.

Figure 7.9 shows a filter f_c and a maximum data f_m. In general it is not desirable to place the highest f_m at the filter f_c. The filter parameters are not as stable at this point as is desirable. As a general rule f_m probably should be 0.6 to 0.8 of f_c. This rule unfortunately increases the sampling rate.

Further, as the order of the filter increases the filter components require much closer matching and higher overall accuracies. While ±10% components might be acceptable for a second-order filter, even ±1% resistors and capacitors are often not sufficient for an airborne eighth-order filter.

Airborne filters are usually subjected to wider temperature extremes than ground-based filters. For this reason component matching and accuracies acceptable for ground based systems often are inadequate for airborne applications. A filter which is sensitive to component matching can deteriorate the wave shape accuracy in serious ways. Figure 5.29 of Reference 7.4 shows an example of an eighth-order Butterworth filter which is constructed with of ±5% components. The resultant amplitude response illustrated in that figure shows considerable deterioration of the typical Butterworth filter amplitude response. Reference 7.5 develops techniques for calculating a filter's sensitivity to component variations.

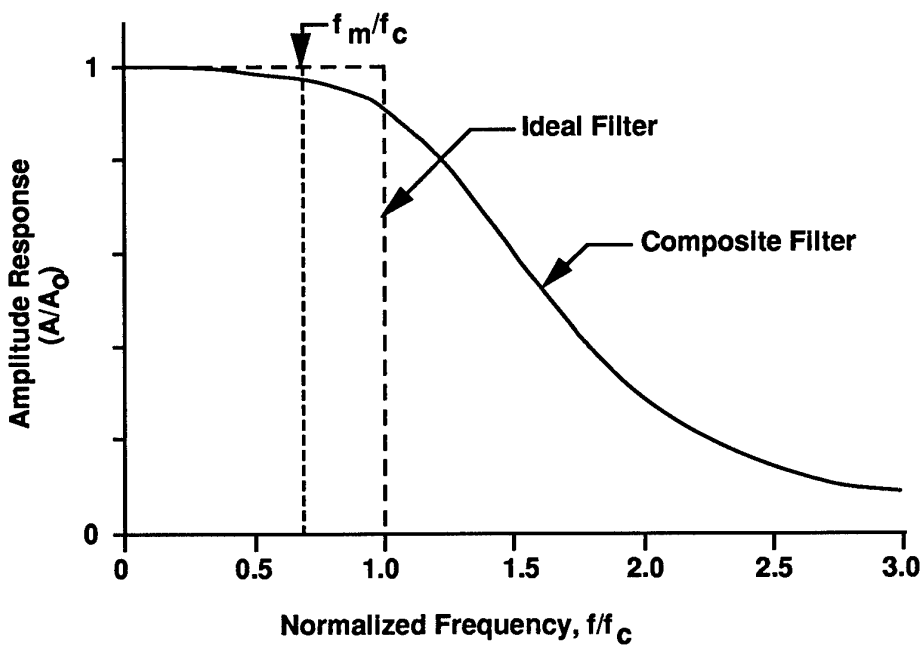

Figure 7.9 A special composite four-pole filter with a maximum passband phase-error of 4°.

Phase-lock-loop tracking filters are special filters that can recover a sinusoidal-type signal when it is buried in noise. They can be indispensable for these types of applications. Phase-lock-loop tracking filters are normally used in the ground station or instrumentation laboratory to recover data.

7.7 RECONSTRUCTION FILTERS

Reconstruction filters are those techniques used to recover the original information from the sampled data points. While this is normally accomplished in the ground station, it is sometimes accomplished in the aircraft as part of a real-time application. Though all the reconstruction techniques discussed provide filtering, some may not at first glance seem to be filters.

Figure 7.10(a) shows a series of time-sampled data points which are the same as in Figure 7.1(b). As mentioned earlier these points can represent one frequency, f_1, in the frequency range of 0 to f_N or many possible frequencies (e.g., the frequencies f_2, f_3, f_4, f_5 ... from Fig. 7.2) above f_N.

A simple sample-and-hold circuit produces the wave shape shown in Figure 7.10(b). If this wave shape is passed through a low-pass filter which has a cut-off frequency of f_c then the high-frequency 'step' information is filtered out and the frequency f_1 is the output shown in Figure 7.10(c). Notice that f_1 has been shifted in time; the original sinusoid passed through the origin. This shift is inherent in the sample-and-hold reconstruction technique and in the subsequent low-pass filter stage.

A reconstruction technique which essentially provides another order of filtering is to join the points of Figure 7.10(a) together with segments of straight lines as shown in Figure 7.10(d). Intuitively this technique provides a closer approximation to the original wave shape. This wave shape can then be filtered to restore f_1 with less group delay than in the previous example.

A much better reconstruction of the original wave shape can be accomplished by using polynomial curve-fitting techniques. If the time-sampled data points are all available to a computer, as they are in the ground station, then a multi-point polynomial-curve fitting approximation produces an excellent match to the original time-sampled data (assuming, of course, that there are no aliasing errors). Figure 7.10(e) illustrates this approach.

To use the multi-point polynomial-curve fitting approximation technique as a 'real-time' data reconstruction technique produces a time delay while the necessary points are accumulated. This delay is not necessarily totally prohibitive when compared to the delays involved in the other techniques.

While the techniques illustrated in Figure 7.10 are analog in nature there are equivalent digital techniques which produce the same results.

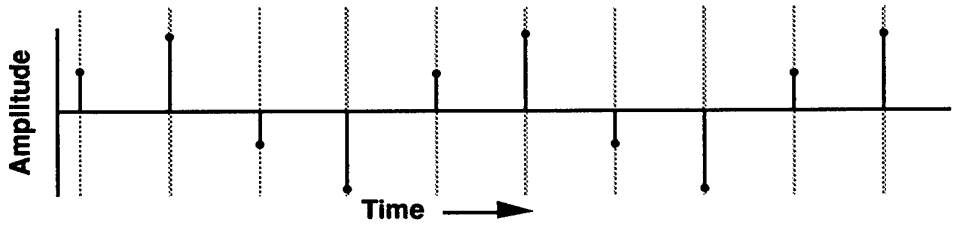

(a) A sequence of time-sampled data points (sampling rate is f_s.)

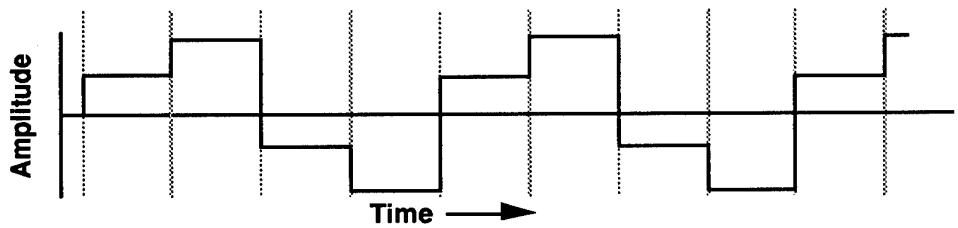

(b) The effects of a sample-and-hold circuit on (a).

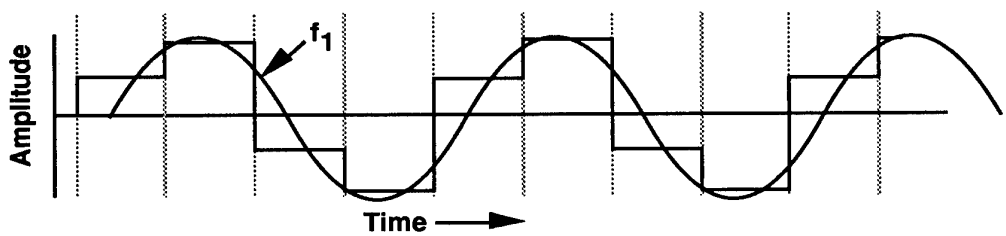

(c) The effects of passing (b) through a low-pass filter.

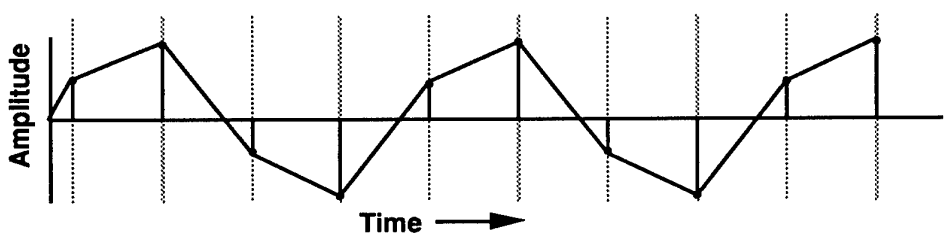

(d) Time-sampled data points of (a) joined by straight line segments.

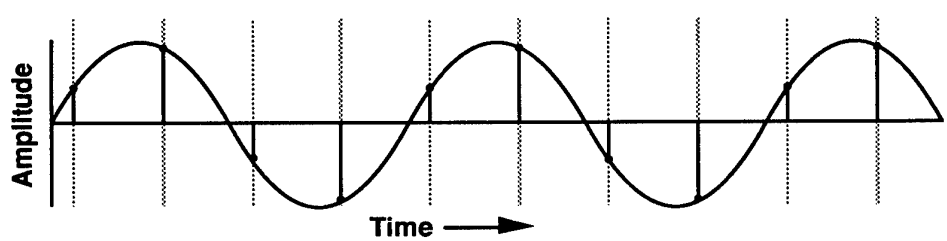

(e) A curve fitted to time-sampled data points by multi-point polynomial curve-fitting techniques.

Figure 7.10 Various techniques for reconstucting time-sampled data.

7.8 DIGITAL FILTERS

Digital techniques provide sophisticated tools to the engineer for manipulating and improving airborne data. The availability of extremely fast and powerful ground-based computers for ground-based data reduction and even 'real-time' support of flight-test programs has forced the flight-test engineer to become familiar with the many advantages that computer techniques provide. In addition, the advent of small, fast airborne computers have opened the way to using airborne digital techniques to improve the data acquisition process.

A digital technique that is obviously applicable to the aliasing problem is the digital filter. Digital filters are often described in texts on digital processing since they are really digital processors. The implementation of a digital filter requires digital multipliers, storage registers, data shift registers, and accumulators. One obstacle to the airborne application of airborne digital filters is that a typical micro-chip digital computer is not optimized for digital filter construction.

Recently digital processors using very large-scale integrated circuitry have been appearing which have their architecture optimized for construction of digital filters, thus making digital filters much easier to construct for airborne applications. Several manufacturers are now making filter units in a single small package. One such unit is a linear-phase eighth-order filter.

The engineer who is well versed in theoretical mathematics and computer techniques might read Reference 7.6 and design digital filters. Even then being able to design digital filters and knowing the pitfalls in applying them are two different things.

The average engineer who has dealt largely with analog filters, and who is not primarily a mathematician, normally will find discussions with the typical digital-filter expert to be a completely frustrating experience. The technical terminology used by the people who design analog filters and digital filters is deceptively similar but only masks the inherent dissimilarities. In some areas there is no common terminology.

A text that successfully makes the digital filter comprehensible to the average engineer is Reference 7.4, Loy's, "An Engineer's Guide to FIR Digital Filters." This reference deals mainly with the FIR filter, but covers the infinite impulse response (IIR) filter to some extent. Not only does it help the engineer understand the strengths and weaknesses of digital filters, it also explains their applicational strengths and weaknesses.

The data user should be aware of a serious difficulty that arises in the application of digital filters as airborne analog-channel anti-aliasing filters. Airborne digital filters cannot be used to eliminate the analog filter. In fact, in an analog data channel, all <u>good</u> digital filters must be preceded by an <u>outstanding</u> analog filter. This is a requirement since all digital filters are sampling devices; therefore, an analog anti-aliasing filter must precede it. This seems to be self defeating, and in many cases it is, even though a digital filter's advantages can be so outstanding that the sacrifice may be warranted. For this reason the use of digital filters as anti-aliasing filters in an airborne flight application can only be justified to meet very special requirements.

Note that a signal that is already in digital form does not have the limitation of requiring an analog anti-aliasing filter to precede it. As an example many of the present applications of airborne filters are in computer channels where the data are already digitized. In these channels the data are assumed to be free of harmful aliasing errors. In any case if aliasing errors exist, they are already incorporated into the data.

The above statement should not be construed to mean that digital filters cannot introduce aliasing errors into the digitized data. Digital filters are also sampling devices and have a sampling rate (f_s) and therefore have a Nyquist frequency (f_N). Special techniques, such as decimation of data, must be used to reduce the number of data points if they exceed the desired amount. Data decimation techniques will be discussed in Section 7.8.3 and are covered in greater detail in Reference 7.4.

Digital filters are already used in many sophisticated airborne applications, such as image enhancement and target acquisition. A general rule would be not to use digital filters in airborne applications unless the extra time, effort, and money are fully justified.

Digital filters can be very effective in ground station computers to help clean up a signal before data processing (Note that ordinary analog filters can do the same thing, but digital filters can do it better. This is particularly true if the data are already digitized as in PCM data.). The digital filter can be used to further reduce some of the high-frequency noise, aliasing, and other types that the airborne filter was unable to eliminate and still introduce very few errors of its own, see Section 7.8.3.

7.8.1 Infinite impulse response digital filters

As far as this chapter is concerned the IIR filter is mainly used to duplicate known discrete-component filters, such as the Bessel, Butterworth, and Chebyshev filters. The advantage of constructing a digital filter which is mathematically identical to a known discrete-component filter is that the digital filter can be a high-order filter without the problem of matching components to a high degree of accuracy and there is no problem with component drift. More importantly, if the data are already in digitized form such as PCM data, then why convert the data to analog form so as to filter it and then digitize the data again?

7.8.2 Finite impulse response digital filters

In this chapter the main emphasis on FIR filters is that they can be constrained to have an absolutely linear phase shift in their pass band. The FIR filter requires more data processing than an IIR filter, but, in addition to its linear phase, it is also absolutely stable and often easier to design.

7.8.3 Ground stations and digital filters

As mentioned earlier the high-order discrete-component analog filter requires high-accuracy components and close matching of these components. Lower order filters take longer to reach a given attenuation and thus permit more aliasing errors to be introduced into the data. Analog filters with maximally flat amplitude response usually have large phase errors.

Digital filters on the other hand can be constructed with very high out-of-bandwidth attenuations and still be stable and drift free. For example, an IIR digital simulation of an eighth-order Bessel filter would have excellent phase linearity and still provide rapid attenuation outside the filters pass band. An FIR digital filter could be constructed with linear phase response in the pass band and still have an excellent amplitude response in the pass band.

Figure 7.11 illustrates how a digital filter can be used in the ground station to reduce aliasing noise. Figure 7.11(a) illustrates the output of a filter excited by a white-noise input signal. This filter is used to band limit the white-noise signal. The only information in the signal of interest to the data user is that in the bandwidth of 0 to f_m. The spectrum of the output of the filter would be that of Figure 7.11(a). If the output of this filter is time sampled by a system whose sampling time is very short, i.e., approaching a Dirac delta function, then a series of data images is created as in Figure 7.11(b). The data spectrum itself is actually not in the sampled data spectrum, but has been included to illustrate how and where the data images contribute noise to the data.

Figure 7.11(c) illustrates the data (0 to f_m), data noise (f_m to f_N), and aliasing noise present in the ground station information. Figure 7.11(d) shows how the standard ground station reconstruction filter (cut-off frequency of f_c) removes some of the aliasing noise. Figure 7.11(e) shows how the noise and aliasing noise can be further reduced by a ground station filter with a cut-off frequency near f_m. 'White-noise' data are particularly amenable to this type of noise reduction.

An example of what a digital filter can do that no analog filter can accomplish is the 'reverse' filter. If, in the ground station, the data are passed 'backward' through an exact digital duplicate of the airborne analog filter, an IIR filter, the phase shift is completely eliminated and at the same time the amplitude attenuation is doubled. This is a particular advantage with some of the maximally flat amplitude response filters such as the Chebyshev and Cauer filters. These filters have very high-phase nonlinearities, but can have very flat amplitude responses. The use of the reverse filter technique eliminates one of the major objections to using these filters for transient data; their very high-phase nonlinearities. Note however that for this technique to work the airborne filter must have a known and stable transfer function.

The reverse filter technique is not a desirable technique for use with a Bessel filter. In this case the phase error is so small that the errors caused by the nonlinear phase are very small. At first glance it might seem to be an advantage to have zero phase shift; however, the Bessel filter has a large amount of attenuation in the band pass and doubling this attenuation at each point in the band pass would produce a major amplitude reduction in the pass band.

As mentioned earlier the only true linear phase filter is the FIR digital filter. This characteristic, unique to the FIR filter, is the major reason for the popularity of the FIR filter, since they require more digital operations to accomplish the same response than an IIR filter. The FIR filter is also always stable, which is not true of the IIR filter.

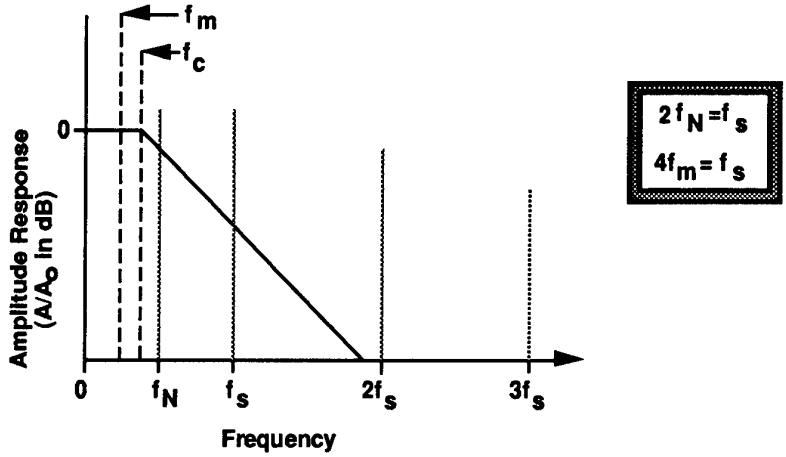

(a) The output amplitude response of a filter excited by a white-noise input signal. Included in the figure are the pertinent sampling and data parameters.

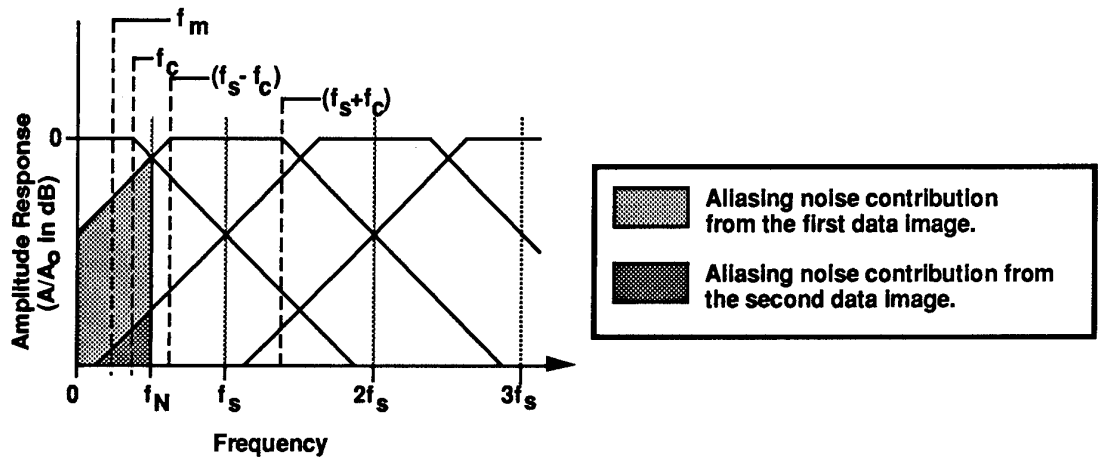

(b) Sampled data images illustrating how the first and second data images can contribute noise to the reconstructed data, i.e., information between 0 and f_N

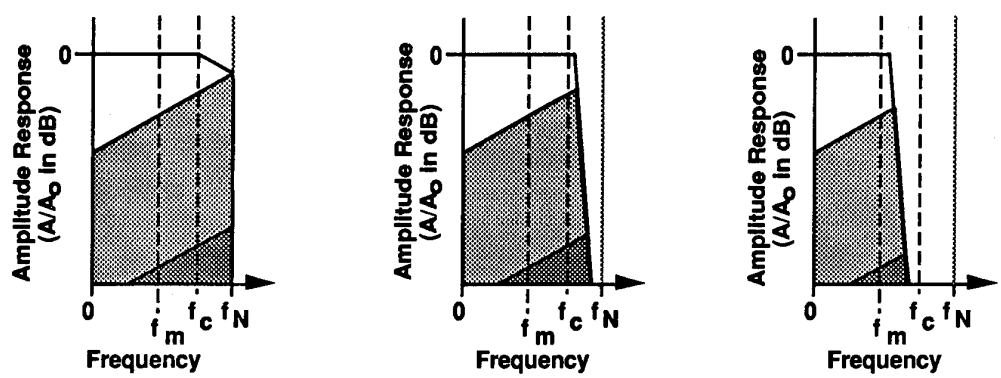

(c) Data, data noise and aliasing noise portion of (b). (d) The effects of the ground station reconstruction filter. (e) A ground station filter used to reduce the noise above f_m.

Figure 7.11 Using ground station filters to reduce aliasing noise contributions.

The IIR filter can be used to design exact duplicates of classical analog filters and, since the filter parameters are specified in common classical filter terminology, a person who is familiar with analog filters can be lulled into a false belief that they understand digital filters. This only masks the actual digital filter from the user. The

linear-phase FIR filter on the other hand has no classical analog filter counterpart. In reading about digital filters there are some differences in terminology. Two particularly confusing points of differing terminology are discussed below.

1. Conventional filters are usually normalized with an f_c of 1 Hz. Digital filters, on the other hand, are normalized at the sampling rate (f_s) which is usually 1 Hz and therefore the Nyquist frequency is 1/2 Hz. Thus the cut-off frequency of the digital filter is always something less than the Nyquist frequency.

2. Conventional analog filter designers usually refer to the order of a filter. The higher the order of a given type of analog filter the higher the stop-band attenuation. Digital designers use transmission width, which is the frequency required to produce an attenuation of 5 to 95%, to define the attenuation of a digital filter. The digital filters are also often defined in terms of the number of coefficients used to define the filter.

A digital filter, as has been mentioned, is very susceptible to aliasing. If a digital filter is used to filter digital data it should not have frequency components above the filter's Nyquist frequency. One way of reducing these frequencies for a low-pass filter is to decimate the data.

In digital filter terminology the word decimation does not mean to reduce by one-tenth, but merely a reduction in the number of data points. A desirable form of decimation is to take the average of a group of n data points. Reference 7.4 points out that the computer's task in taking this average is made much easier if n is a power of 2 (i.e., 2,4, 8...) since a simple computer 'shift' operation then can be used instead of a division operation. This technique reduces the number of data points and significantly reduces the number of operations required by the digital filter. Decimation is a very important digital filter technique. For further reading on decimation an excellent text on this subject is Reference 7.7.

7.9 ANTI-ALIASING TECHNIQUES

The data sampling rate and the anti-aliasing filter are major tools for reducing aliasing errors. The purpose of this section is to present various examples (i.e., cases) which demonstrate the most common data and noise combinations. Strategies for dealing with these cases in an optimum manner will then be discussed.

The following discussions assume that the data user knows the maximum frequency of interest (f_m). As has already been demonstrated any frequency higher than one-half the sampling rate (f_N) will be aliased as a lower frequency; therefore, the highest f_m to the data user must absolutely be less than one-half f_N. In a new flight program this is not a trivial problem. Particularly as an error in this estimation of f_m on the low side can cause loss of valuable data due to aliasing. A much more common mistake is to establish an estimate for f_m which is much too high and thus overload the recording and transmission channels.

7.9.1 Case 1: the good data channel

The most common flight test situation is one where the desired data are by far the most dominant signal in the time-sampled data. Typically the noise is many decibels below the data signal's peak output and does not limit the data accuracy. Many times this noise is a white-noise type of noise "floor." This noise floor limits the accuracy of the data when they are measured in an analog mode. It also limits the accuracy when the data are time sampled.

Figure 7.12(a) illustrates how this noise floor can extend out to very high frequencies. This noise is aliased back into the data bandwidth and even further reduces the data accuracy; however notice if the noise is really white noise, then the error is added in a root-mean-squared (rms) format and not as additive as one might at first suppose. Also, in a real system the higher order images eventually are reduced in amplitude due to the finite sample widths. With the signal distribution shown in Figure 7.12(a), and when there is no filtering, increasing the sampling rate is not a efficient way to reduce aliasing error.

If the noise floor is low enough so that it will not effect the required channel accuracy then there is no reason to worry about the noise. Simple filters are used with these systems in case the noise is not as well behaved at higher frequencies as expected, see Section 7.9.2 below.

Anti-aliasing filters are often constructed using operational amplifiers (Ref. 7.1). This type of filter is called an active filter and often has an inherent noise floor which produces the characteristic of Figure 7.12(b). This produces the same results as in Figure 7.12(a).

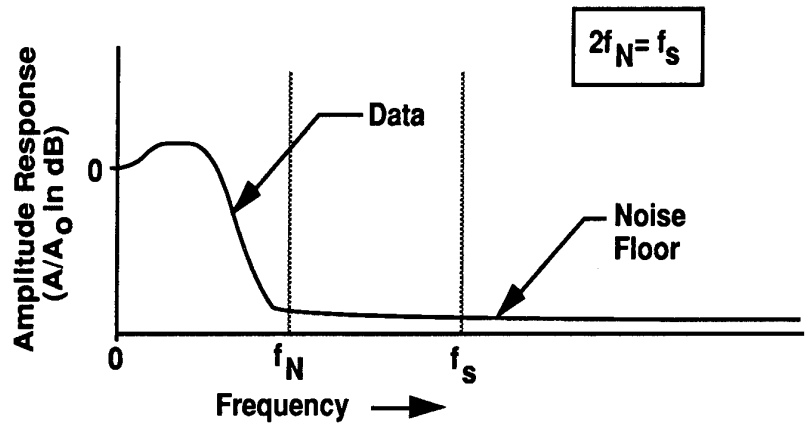

(a) Data which has a white-noise limit to accuracy.

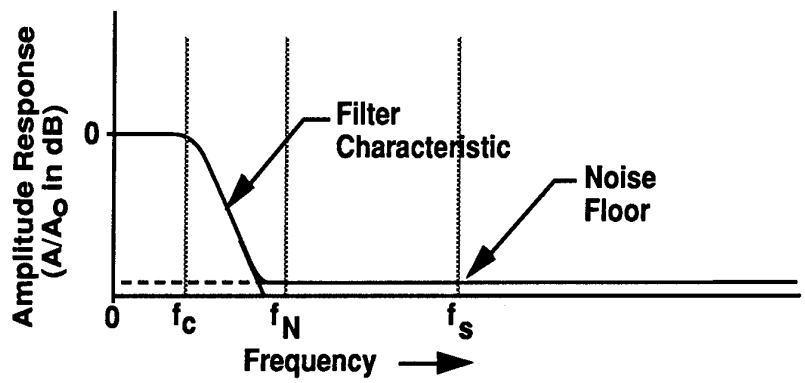

(b) A noise limited active filter.

Figure 7.12 Two examples of noise-floor sources.

In the example involving a data signal with a white-noise floor a filter will reduce the effects of the images folding back into the data. If the filter of Figure 7.12(b) is unacceptably noisy then a quieter filter should be substituted.

In the case where the noise floor does not limit the desired data accuracy there is little advantage in an indiscriminate increase in the sampling rate. Sampling rates of four to five times the maximum f_m can be quite adequate. If f_m is low, e.g., much lower than 400 Hz, then acceptable results can often be achieved when only a simple first-order RC anti-aliasing filter is used to prevent coupling of power-line electrical noise into the data.

For example, a research vehicle which incorporated a great many PCM channels was flown with first-order RC filters as the anti-aliasing filters in the majority of the data channels. One vehicle was flown with no anti-aliasing filters in the majority of the channels. These two vehicles illustrate that many research vehicles do have well-behaved data and that good acquisition of data is possible with minor amounts of filtering.

The selection of a sampling rate that is four to five times the f_m is justified by the assumption that the airborne anti-aliasing filter is a low-order, first-to-fourth-order filter. This permits filter designs which require reasonable component accuracies and matching to achieve reproducible filter characteristics.

7.9.2 Case 2: the good data channel with a remote noise spike

One of the most common sources of aliasing errors in flight test data is a data signal which has a prominent noise spike that occurs at a frequency much higher than the required data information. Probably the single most

common source of this spike is the unintentional electro-magnetic or common-ground coupling of the aircraft power signal, usually 400 Hz, into the signal to be sampled. Another example is an aircraft-body-motion accelerometer which has been mounted on a flimsy shelf with a high-frequency resonance, Reference 7.2. These types of errors could be classified under poor system design, but a few similar examples always seem to occur in any large instrumentation system.

These spikes were never intended to be included in the data signal. If they had been anticipated, an attempt would have been made to eliminate them. They often are at a frequency so much higher than the intended data signal that they are aliased into the data by means of the second or higher signal frequency domain image. See Figure 7.5 for an example of a noise spike that is aliased into the data from the second data image.

Due to the nature of aliased information these spikes appear as lower frequencies and can appear in the data bandwidth. As mentioned earlier these aliased frequencies now are indistinguishable from actual low-frequency noise or data. Without additional information it will be difficult or impossible to determine the aliased origins of the information.

The coupling of aircraft power frequencies into the data can be particularly elusive. Most engineers tend to make the sampling rates in convenient increments, such as 10, 20, 50, 100 samples per second, and therefore the aliased 400-Hz noise appears as a pseudo-steady-state signal, i.e., a dc or slowly varying offset. These types of signals may be particularly difficult or impossible to identify for transducers that have dc response.

In this example the solution is to use an anti-aliasing filter which has attenuated the spike by the desired amount before the data is sampled. This can be a relatively simple filter when the spike is widely separated from the data.

When a large noise spike can exist near the data the first approach should be to eliminate the noise source. If this is not possible then a more sophisticated anti-aliasing filter is required.

If the data are simple signals, such as sinusoid, the nonlinear phase of the filter is not critical and a Cauer filter might be acceptable. A Cauer filter can be constructed which very closely approximates an ideal filter in its amplitude response, Refs. 7.1 and 7.5.

A notch filter can be used to remove a noise spike; however, care must be taken when notch filters are used in or near the data since they introduce considerable phase nonlinearities in their vicinity. If the data have a spike which is slightly higher than f_c, then a Cauer filter has a zero (a point of infinite attenuation) located just beyond its cut-off frequency. This zero is what causes the filter's attenuation just after its cut-off frequency to be very steep. Ideally the filter approaches infinite attenuation at this zero; however, in actual filters this attenuation seldom approaches this ideal attenuation). A Cauer filter rebounds from this zero and thus has ripple in its stop band; however, the zero can be designed so as to function as a notch filter for frequencies near the filter's cut-off frequency. Beware of relying too much on this type of spike filter; the spike may shift frequency, the Cauer high-attenuation point may shift due to filter parameter instabilities, or both.

If the data are a complex wave form then the first approach should be to examine a Bessel filter or the 'linear-phase' compound filters of Reference 7.4. The compound filter shown in Figure 7.9 has good amplitude response and a phase response which is acceptably linearity for most applications.

7.9.3 Case 3: white-noise data

White noise data are rarely encountered in flight test situations. While such data are rare, they do occur. An example of a signal which approximated this case was the output of a fluidic Mach probe used on the X-15 rocket aircraft. The output of this probe was a sinusoidal data signal which was 20 to 40 dB below the noise produced by the probe. The noise spectrum in this case closely approximated white noise. In the vehicle all the noise was filtered out except the frequency range that included the data. The channel was then direct recorded on a wide-band tape channel since the sampling rates would have been too high for the sampling systems available at that time. The signal was recovered in the ground station using a phase-lock-loop tracking filter.

If the white-noise model of Figure 7.4 is used to analyze aliasing noise it is easy to understand why many of the mathematical treatises on aliasing recommend increasing the sampling rate as the primary technique for reducing aliasing errors. Figures 7.4(b) and 7.4(c) illustrates how a simple increase in the sampling rate can significantly reduce the aliasing error for this type of analysis. The results of Figure 7.4 are in stark contrast to those produced by the signals of Figure 7.12.

Unfortunately the most common mathematical models used for analyzing aliasing use white-noise type input signals to determine the sampling and filtering requirements (see Ref. 7.3). This can lead to erroneously high sampling rates if this is not the actual model of the data channel being analyzed.

Since many of the mathematical models used for the prediction of aliasing errors are derived from premises similar to those used to generate Figure 7.4, it is very important to understand this particular model's limitations. The misinterpretation of how to apply this model has caused many airborne data acquisition systems to be grossly over designed with regard to sampling rates. This particular mathematical model should never be applied unless the signal or noise approximates a white-noise input.

Many texts have been written on how to optimize sampling rate versus filter bandwidth if the data signal is of the white-noise variety. Reference 7.3 and the unpublished paper of L. W. Gardenhire provide excellent coverages of the these types of inputs. These models are covered in considerable detail in these papers.

These models lead to very high sampling rates; however, the sampling rates used in the paper by Gardenhire are excessively high. This follows since the mathematical model used in this paper makes the assumption that the information in the bandwidth of Figure 7.4(a), including the information after the filter's cut-off frequency (f_c) is all meaningful data and any modification of this bandwidth produces an error in the final results.

Actually the information above f_m and certainly above f_c (see Fig. 7.4(a)) is expendable and can be removed in the reconstruction process. Since this model produces the highest aliasing errors at the highest frequencies, (see Figs. 4(b) and 4(c)), the reduction of the aliasing errors at these frequencies will significantly lower the predicted desirable sampling rates since the aliasing error has been significantly reduced.

As can be seen this type of data requires high sampling rates. However, the sampling rates for these types of data will be high, even when allowances have been made for some of the original mathematical assumptions. Fortunately these data distributions rarely occur, but when they do occur the recommendations of these analyses are very useful.

7.9.4 Case 4: resolution of a transient event

One of the legitimate justifications for increasing the sampling rate is to increase the resolution of a transient event. An example might be a step input or a transient spike. One of the first questions then becomes how close does the actual transient have to be resolved?

It is the author's personal opinion that too many data users request resolutions and accuracies that are unrealistically high for this type of data. In a couple of actual cases involving reasonably large numbers of data channels, the requested amount of data exceeded the recording, transmission and data reduction capabilities of any reasonable data system. Techniques, other than PCM, exist to handle these types of problems, but too many data users want the resolution and accuracy of a PCM system.

A general rule is to remember that it is almost impossible to justify resolving the amplitude of most aircraft fast transients to accuracies better than the 2% available on FM/FM tape recorders. Hardly ever is it necessary to reproduce the fine detail of a fast transient with the high accuracies provided by most PCM systems.

The most common mistake made in trying to resolve a transient is that the data user assumes an infinitely fast rise time for such inputs and the resolution is determined by some overly idealized resolution requirements. To compound the problem the data user often requests that the amplitude information in these transients be measured to the very high accuracies requested for the channels nontransient data. In actual practice the sampling rate can often be much lower than at first thought, since actual systems on an aircraft do not respond anywhere near a true infinitely fast rise-time transient input.

As an example it was desired to measure the effects of a shock wave produced as a supersonic vehicle passed another vehicle which had been instrumented with pressure transducers. A shock wave has a very fast transition; however, after analysis of the preliminary data the actual required sampling rate was found to be substantially lower that the original estimates. The actual transient was actually an order of magnitude slower than predicted.

Often when the transient detail and highly accurate data are required then the best solution is to use two different types of data channels to record the data. The high-frequency portion of the data can be recorded on a wideband data recorder, such as a tape recorder or oscillograph. The high-accuracy portion of the data can then be filtered and sampled as quasi-static high-accuracy data by a PCM system. Usually when many data channels

are to be recorded which have transient details that require the wide-band recorders, a few well chosen channels will often provide the knowledge required about how the transient appears on the remaining channels.

Only experience and careful analysis of the system under study can establish the optimum sampling rate for these transient types of signal inputs. In these systems the desired resolution determines the sampling rate and the filter must be selected so as to pass the information that must be resolved. Remember that a linear-phase filter will preserve basic wave shapes and rise times; only the sharp detail will be lost. A nonlinear phase delay will distort the data, sometimes beyond recognition.

However, if this transient event occurs once in a flight then the effect is a very high sample rate for a short duration event. If many channels are involved the bandwidths may quickly become prohibitive.

One solution for a predictable transient such as that induced by an electrically explosive device (EED), is to use a dedicated high-speed PCM system which acquires the data in a short burst only at the time the induced transient is initiated and stores the burst of data in dedicated memory. This memory can then be clocked out at a slower rate into another data stream, for example, a PCM data stream or incremental tape recorder.

Another solution, particularly for nonpredictable events is to use a loop tape recorder, and save the transient event when it occurs. The tape recorder can be used with time-sample data, but is often best used with FM/FM techniques.

7.9.5 Case 5: ground station techniques

The ground station can improve the quality of the data. As mentioned earlier a 'reverse' filter can correct for system phase errors and provide additional filtering. This additional filtering reduces the high-end aliasing noise.

The interpolation techniques that are used to reconstruct the data, whether used for analog or digital output, function as filters. As explained earlier an analog interpolation filter can be as simple as sampling and holding each data point and passing these signals into a filter, drawing a straight line between each data point, or using polynomial curve fitting (see Fig. 7.10). Each mentioned technique, in order, is an increase in complexity and in effect adds another 'filter' order to smoothing the output wave form.

As f_m is less than f_c (see Fig. 7.4(a)), sophisticated high-order ground station digital filters can be used to remove noise, aliasing and otherwise, above f_m. The linear phase FIR filter could be used in this case. Remember the time delay introduced by these linear phase filters must be taken into account when comparing two data channels.

Digital techniques, such as the FFT, can be used to correct for various system errors, but not for aliasing errors.

7.9.6 Combined cases

Other cases could be constructed, but most of them are combinations of the above and can be solved by studying the individual cases.

7.10 CONCLUSIONS

Blind faith in any one strategy or single technique to determine the optimum sample rate and filter bandwidth to reduce aliasing errors only leads to nonoptimum results. A reasonable approach is to first construct an instrumentation system which embodies the best instrumentation practices; particular emphasis should be placed on reducing noise. Secondly, protect the bulk of the well behaved low-frequency channels with simple first- or second-order analog filters and reasonable sampling rates, i.e., sampling rates that are four to five times f_c or f_m, to reduce the impact of inadvertently coupled aircraft electrical power frequencies into the sampled data.

Problem channels will require a more detailed knowledge of the noise and signal spectrums. These channels require more sophisticated use of filters and sampling rates.

If certain data channels are absolutely critical and the possibility of aliasing must be completely eliminated then these channels may have to be sampled for accuracy and recorded by some broad-band recording technique. The broad-band recorder for instance could be an oscillograph or tape recorder.

The ground station can be used to further reduce aliasing errors and noise in the data. It is limited in what it can do for data which are already corrupted with aliasing errors; however, it can reduce some of the aliasing noise and correct for certain system problems.

7.11 REFERENCES

7.1 Veatch, Donald W. and Rodney K. Bogue, "Analogue Signal Conditioning for Flight-Test Instrumentation," AGARDograph No. 160, Vol. 17, 1986.

7.2 Borek, Robert, "Practical Aspects of Instrumentation System Installation," AGARDograph No. 160, Vol. 13, 1981.

7.3 Hagenauer, Joachin, AGARD-Crandfield Short Course, Flight Test Instrumentation, May 1979.

7.4 Loy, Nicholas John, "An Engineer's Guide to FIR Digital Filters," Prentice Hall, Englewood Cliffs, NJ, 1988.

7.5 "Operational Amplifiers, Design and Applications," Jerald G. Graeme, Gene E. Tobey, and Lawrence P. Huelsman, editors, McGraw-Hill Book Co., Inc., NY, NY 1971.

7.6 Rabiner, Laurence R. and Bernard Gold, "Theory and Applications of Digital Signal Processing," Prentice Hall, Englewood Cliffs, NJ, 1975.

7.7 "Applications of Digital Signal Processing," Allen V. Oppenheimer, editor, Prentice-Hall, Englewood Cliffs, NJ, 1975.

Chapter 8

CALIBRATION

by

D. R. Crounse
Flight Test Instrumentation Engineer
Air Force Flight Test Center
Edwards AFB, CA
United States

8.1 INTRODUCTION

Calibration of flight test instrumentation is the process of determining the transfer function, i.e., the input-output characteristics. This transfer function can be for either individual components or a channel of a measuring system from beginning to end. Calibration normally involves: 1) application of known input stimuli from traceable standards, under controlled or known conditions, 2) measuring and recording the component or system outputs, 3) analyzing the recorded data and 4) providing the scaled data to a flight data reduction facility. The instrumentation system designer or calibration engineer is faced with three choices to obtain calibration data: 1) have a calibration performed under their guidance as described, 2) utilize data from calibrations performed by the manufacturer of the device, or 3) utilize data derived from theory. Most major flight test facilities either have on site facilities to perform the majority of the necessary calibrations or have access to a nearby facility. National metrological laboratories are often available for specialized calibrations and in addition, many private companies provide calibration services. While this subject sounds simple, there are many considerations that the calibration engineer must satisfy to make the end product of the instrumentation system design-flight test data-acceptable. This treatise will address the general aspects of calibration. Specific processes applicable to particular devices are discussed elsewhere: in the AGARD series, available from manufacturers of instrumentation devices, or are available from manufacturers of calibration equipment.

8.2 BASIC MEASURING CONCEPT

A simplistic view of a measuring device or system would have an input (I), a conversion process (C), and an output (O) (see Fig. 1).

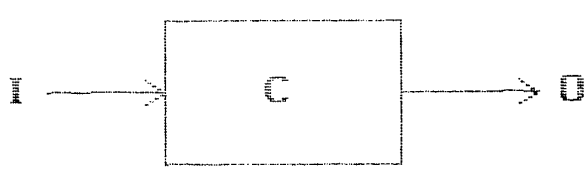

Figure 8.1 Simplistic device.

The transfer function of this simplistic device can be described by equation (8.1).

$$O = f(I) \tag{8.1}$$

8.3 THE REAL WORLD CONCEPT

In the real world, the conversion process is influenced by undesirable outside forces. These forces are such that the output (O) is a function of both the input (I) to be measured and these outside forces. Ernest Doebelin (Ref. 8.1) calls these forces *interfering inputs* or *modifying inputs*. (See Fig. 8.2).

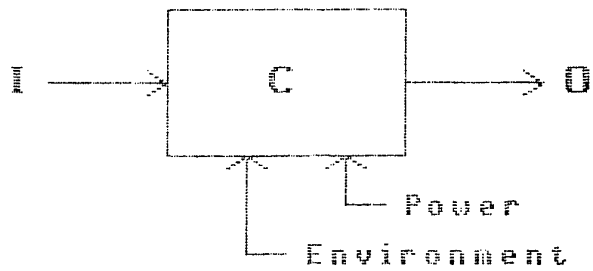

Figure 8.2 Real world device.

Examples of the outside forces are:

Environmental effects:
- Temperature
- Pressure
- Humidity
- Vibration
- Acceleration

Power effects:
- Noise
- Variation
- Electromagnetic interference

The conversion process now is described by equation (8.2).

$$O = f(I, E, P) \tag{8.2}$$

Component designers occasionally attempt to correct the output of their devices through what Doebelin calls *intentionally introduced interfering inputs* (Ref. 2). The intent of these inputs is to be essentially equal to but opposite in sense to interfering input (see Section 8.4.1).

8.4 THE MEASUREMENT SYSTEM

The conversion process described above is applicable whether the conversion is an individual component (i.e., acceleration IN / voltage OUT) or a complete measuring channel (i.e., acceleration IN / PCM counts OUT). A flight test instrumentation system includes both an acquisition portion with sensing/conditioning components (Fig. 8.3) and processing system with decoding/display components (Fig. 8.4). Also refer to Chapter 2, Figure 2.1.

The system concept is reiterated because the system designer must be concerned with both aspects, while the calibration engineer is in most instances concerned with only the acquisition system. As mentioned, the goal of an instrumentation system is to provide data to the customer. A transfer function obtained from calibration of the acquisition system is utilized by the display system to reproduce the input function to the particular data channel. Failure on the part of the system designer to consider the display system in the overall calibration scheme can lead to problems in the interpretation of results and often leads to a "finger-pointing" exercise to place the blame. The system designer must educate the calibration engineer on the nuances of the display system to assure data integrity.

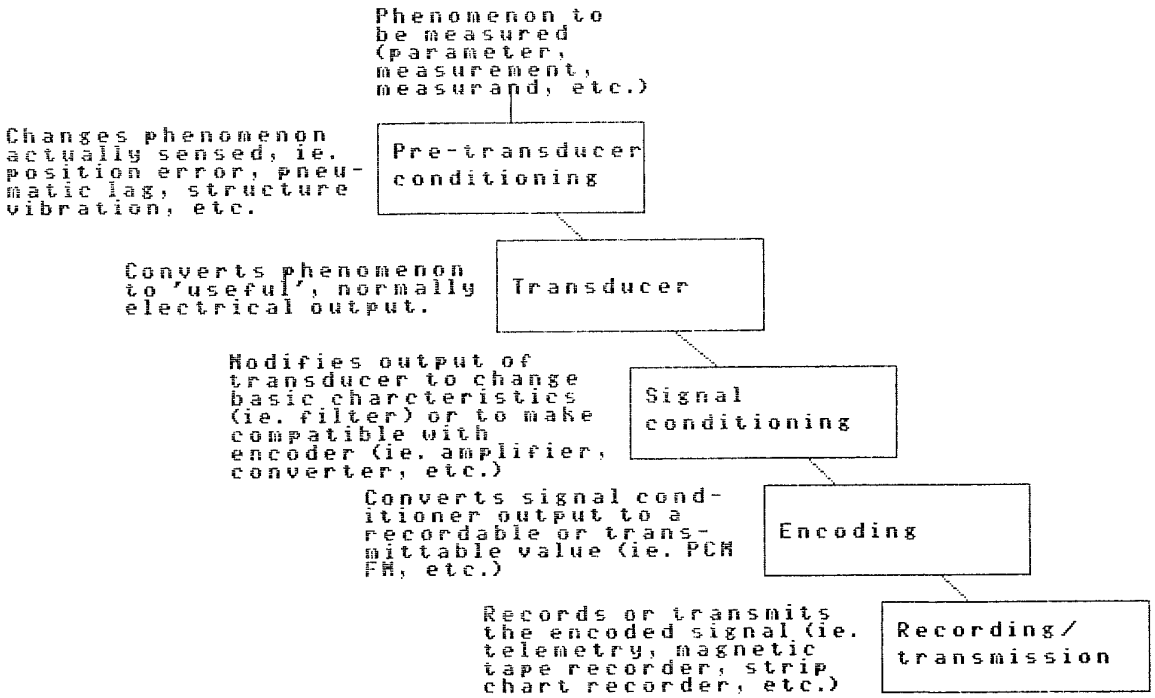

Figure 8.3 Acquisition system.

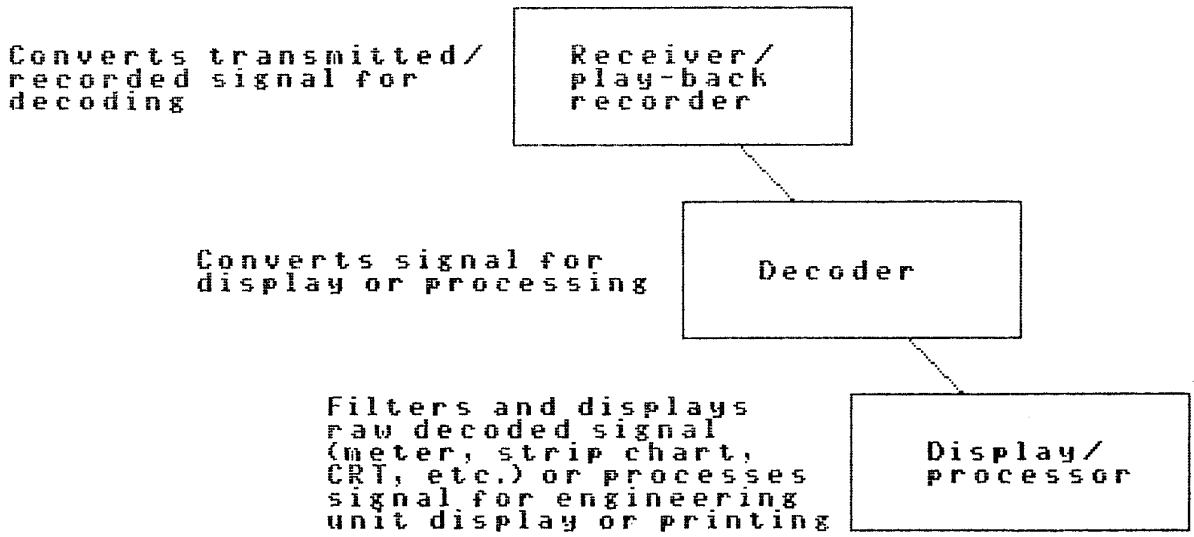

Figure 8.4 Processing system.

8.5 DATA USE

The result of the calibration process, in addition to allowing the display system to accurately provide the information acquired during the operation of a complete system, is data that allow the system designer to determine the acceptability of the acquisition system design. If the calibration data show unacceptable results for a component type, the system designer must: 1) select a different component, 2) change his design to accommodate the component, or 3) inform the flight test engineer of system measurement limitations.

8.5.1 Accommodation

One approach at accommodation was mentioned earlier as *intentionally introduced interfering inputs.* Using this approach, a component within the measuring device modifies the output. Examples of this approach include variable amplifier feedback (e.g., a thermistor as a feedback resistor to correct for temperature effects), filtering, and more recently, digital correction using microprocessors. Another approach is external to the device. Examples of external accommodation techniques include:

Controlling the Environment
- Place the device, or a portion of the device in an oven.
- Orient the device for minimum sensitivity to the environment.

Measuring the Environment
- Perform multiple calibrations.
- Select the proper one during data processing based on the measured environment.

In general, accommodation of the errors that would be induced from a particular device require additional measurements and often require complex display computations to recover the flight data. The system designer must carefully weigh the time and costs for a redesign of the acquisition system or selection of different devices versus the time and costs for addition of measurands to the acquisition system and the potential design of the display system and/or software.

Changes in the system design that occur due to the review of calibration results will normally be very costly, both in resources and time. It is much better to make the right choice of transducers, etc., in the beginning.

8.6 TRACEABILITY

The calibration data must be traceable to acceptable standards. In metrology, traceability is the history of the transfer of standards (length, mass, time, etc.) from the international definition to their final use. Each country has a department or bureau that maintains national standards from the basic physical quantities that define nearly every measurement that an instrumentation system senses. These national standards are called primary standards. Each government agency or private company must have a records system to assure that any data or test results furnished to a customer can be traced back to these primary standards. The predominate system involves a facility that maintains secondary standards. These standards are periodically sent to the national facility for calibration (or are calibrated in-place by traveling standards). The individual users in a calibration facility for instance in-turn send their tertiary standards to the secondary standards location. These tertiary standards are then used to calibrate production standards or in some cases are production standards themselves. The production standards are then used on a daily basis to perform calibrations. Production standards are also used in the manufacture of special mounting fixtures for calibration. Calibrations in a laboratory will normally have well defined traceability but calibrations that must be performed onboard the test vehicle will need careful design and analysis to assure traceability. With the advent of automation of test equipment, including many calibration standards, one subject that becomes part of traceability is the software that controls the equipment. The designer must assure that errors are not introduced in the calibration process due to software "bugs."

Traceability does not address the *quality* of the standard (i.e., accuracy, frequency response, stability, etc.) Traceability only addresses the path from the national standard to the data gathered during the calibration process. The system designer and the calibration engineer must be familiar with the specifications of all the equipment used and the procedures used to transfer the information from item to item. The age-old axiom, "measure with a micrometer, mark with chalk, cut with an axe," can often be seen in the metrology world as a calibration is passed from the universal definition of the phenomenon at a national facility to the production device in an instrumentation calibration laboratory. For example, use of the absolute standard for length to calibrate a wooden ruler (with a dull pencil) and then using the ruler to calibrate a micrometer will be traceable. But using the micrometer to measure distance will produce a measurement with the accuracy of the ruler, not the micrometer.

8.7 UNIT DEFINITION

Both the data user and the calibration facility must be using the same *units definition* of the standard. This is seldom a problem in the classical measurements such as length, mass, time, etc. This definition must be carefully watched in derived measurements such as altitude, fuel flow, etc. The pressure altitude relationship has undergone several changes in the last 20 years (Ref. 8.3) Volumetric fuel flow (i.e., gallons/hour) involves density and viscosity terms to convert to mass fuel flow (i.e., pounds/hour).

8.8 STANDARD INDUCED ERRORS

In general, calibration devices should be approximately 10 times better than the instrument (Ref. 8.4), and the instrument 10 times better than the measurement requirements (other sources quote 5 or even 2). The important point is that the measuring device must be better than the measurement requirements and that the calibration device must be better than the measuring device. This requires that realistic characteristics (see Section 8.9.1) for the measurement be defined and communicated to everyone involved in the calibration process and that any item or action that lowers the ability of the instrumentation system to meet the characteristics be communicated to everyone.

8.9 CALIBRATION PROCEDURES

Written calibration procedures are critical. The procedures must document the equipment necessary for the calibration, the steps to follow, and the data to be recorded. From analysis of the data, the designer must be able to ascertain the acceptability of both the device and the particular calibration and be able to provide the flight test engineer with proof of acceptability. The procedures must assure that sufficient data, under the proper conditions are acquired and that the data are analyzed for the traits of the device that could result in flight test inaccuracies. A properly written procedure will provide for repeating the calibration. The procedure must be sufficiently detailed so that the input-output relationship of the device will only vary due to the device characteristics, not operator or test/calibration equipment characteristics. Doebelin lists the following approach (Ref. 8.5).

1. Examine the construction of the instrument, and identify and list all the possible inputs.
2. Decide, as best possible, which of the inputs will be significant in the application for which the instrument will be calibrated.
3. Procure apparatus that will allow you to vary all significant inputs over the ranges considered necessary.
4. By holding some inputs constant, varying others, and recording the output(s), develop the desired static input-output relations.

Avoid verbal procedures: only written procedures can provide assurance of duplication of the calibration process and help the calibration engineer to, after-the-fact, determine if there is anything in the process or personnel performing the calibration that creates errors.

The majority of calibrations are performed as static calibrations because the device selection process makes the effect of dynamic response insignificant. Static calibrations must provide sufficient *settling time* for the input standard and the device under calibration. Equally important is the time required for any test equipment to stabilize.

Much dependence is placed on the definition of the dynamic response characteristics by the device manufacturer. The system designer must be aware of both the dynamic response requirements for the measurements and the ability of the device to meet those requirements. *Dynamic* calibrations can be performed to either determine or verify the dynamic characteristics. Chapter 4, Section 4.4.2 discusses in detail the dynamic characteristics that the designer must consider. Dynamic electrical signals whether sine, step, or ramp are easy to simulate, particularly with current generation, computer controlled signal generators. Also, current generation pressure, rate tables, etc., have sophisticated computer control systems that allow dynamic simulation. These devices must be carefully chosen as they are often capable of accurate performance only in relatively low frequencies.

Care must be taken to assure that the purity (distortion) of the signal is known; particularly distortion from mechanical calibration equipment. An "almost-sine-waveform" can introduce unwanted frequencies in the calibration. Recording of the instrument output during dynamic calibration is rather complex. Test equipment that acquires data in the time domain must be used to solve the equations in Chapter 4. While signal analyzers are available that directly measure phase shift, their cost and infrequent usage often prohibit their availability in the calibration laboratory.

8.9.1 Characteristics

The measurement "quality" requirement mentioned earlier must be mutually understood by the system designer, the calibration engineer, and the flight test engineer. Standard terminology (characteristics) is used to describe performance so that the various personnel involved in the use of an instrumentation system can communicate their desires and concerns about the performance of the system and its individual components. It is imperative

that all concerned have the same understanding of the terms used. In describing the characteristics, the term *percent* is often used. . . the "percent of what" must be clearly understood. Percent of reading (or value) and percent of full scale are two different values. If the flight test engineer is thinking value while the systems engineer is thinking full scale, someone will have a shock. Chapter 4 covers the definition of characteristics in detail.

8.9.2 Calibration data presentation techniques

The universal presentation technique used to describe the results of a calibration is the calibration curve. The curve involves the following elements:

Vertical and horizontal axes

Individual data points
- increasing
- decreasing
- average

"Best-fit" line through the data points

When environmental conditions require accommodation (see Section 8.5.1), a "family of curves" is required to describe the results at each condition.

The curve allows a quick look at the general quality of the calibration and allows easy spotting of apparent errors. Detailed description of the quality requires a numerical analysis of the data to allow the user to determine the fine nuances of difference between devices or in relation to the measurement requirements. No matter which approach is used, one requirement that must be met is comparison of any particular calibration with previous calibrations on the device, previous calibrations of devices of the same model but different serial numbers, or previous calibrations on similar type devices. Failures in test equipment can occur, devices can change characteristics, a modification to software can create a "bug" elsewhere, etc. These problems can create a condition where a data set by itself looks good but has subtle errors. Comparison of calibration data can point to errors that can be corrected before flight data is compromised.

Refer to the appendix for figures A1, A2, A3, A4, and A5 with their associated tables of values for examples of typical transducer calibration data and resultant data plots used for this purpose.

8.9.3 Visual instrument calibration

One area that is often overlooked in training new instrumentation engineers is the use of readings from production, visual instruments for quick, limited data acquisition. This can be done either through voice transmission of readings, hand recording of readings or photographic/video recording of readings (see Chapter 3). The accuracy of the data gathered can be improved through a process of instrument correction of the indicated values. Data for the calibration of the visual instrument is gathered as described before but the results are presented in a slightly different manner. The instrument error at each data point is calculated using equation (8.3).

$$C = T - I \tag{8.3}$$

Where
C = Correction - to - Add
T = True Value
I = Indicated Reading

The analysis of the data involves plotting the correction versus the indicated reading and determining the reasonableness of the hysteresis and shape of the curve. The final curve used for correction of the test recorded data is a plot of the average value at each data point. To instrument correct the test recorded data, the curve is entered with the instrument reading to determine the correction-to-add and then using equation (8.4) to determine the actual value.

$$T = I + C \tag{8.4}$$

Where
T = True value of the reading
I = Indicated reading
C = Correction from the calibration

8.9.4 On-vehicle calibration

For many measurements, laboratory calibrations are either impossible or impractical. Examples are surface positions, control positions (throttle, control stick, actuators, etc.), yaw and pitch vanes, etc. In these cases the system designer and/or calibration engineer must acquire or design and construct mechanical devices to provide the input function. Care must be taken to assure that the input device has traceability (see Section 8.6) and that it is periodically re-calibrated. The design must address environment differences between manufacture and use (machine shop versus flight line) that could cause errors. The calibration procedure must also address the potential difference in qualifications between laboratory and flight line technicians. Fixture alignment, settling time, etc., that are normal procedures for laboratory personnel might not be normal for flight line personnel.

Use of on-vehicle calibrations can also point to other problems such as electromagnetic interference (EMI), dirt or water in pressure tubing, anomalies in installed wiring, etc. (Ref. 8.6).

8.9.5 Environmental calibration

To properly describe the characteristics of a device or system, the designer may additionally require that the calibration be performed under various environmental conditions that the device will undergo in operation. Temperature, altitude, and acceleration are the most common conditions but the system designer and the calibration engineer must consider all potential factors in both selection of devices and the calibration procedure. In Section 8.2 the concept of intentionally introduced interfering inputs was presented. If the device utilizes this approach, care must be taken to assure that the desired correction occurs over the environmental range the device will experience in use.

8.10 SYSTEM VS COMPONENT CALIBRATION

The interface between various components of an acquisition system may be sufficiently defined that individual item calibrations can be combined to provide a system calibration. Conversely, the interface may be so undefined that all the components, including the installed wiring, must be used to provide accurate data. Many factors must be considered in making the decision of which approach to use, including organization policy, personal or organizational experience with the individual components or systems, cost and time involved, availability of a calibration facility, access to portable/traceable standards, size and complexity of the installed acquisition system, computational capabilities to combine many individual calibration data sets, the data presentation approach used, accuracy requirements, and the ability to repeat the test mission.

8.10.1 Individual component calibration

Even if a system calibration approach is planned, each component should always be individually calibrated. This allows the designer to allocate the error budget for the measurement and if it is insufficient, see which device is the most likely target for improvement. The overall error for the channel can be estimated by statistical combination of the individual device errors. Since the data processing system usually requires a single calibration for each data channel, the task of merging the several individual calibrations must be performed by the designer. If all the individual calibrations are linear and can be described by a first order equation ($y = mx + b$) the process is relatively easy. When one or more calibrations are not linear, the mathematical process becomes more complex. One large advantage to individual calibrations is that when one item in the string fails, it can be replaced immediately (assuming that a calibrated spare is available) and the test mission can proceed on or near to schedule.

One big disadvantage to individual calibrations is that the bookkeeping task becomes larger to assure that the data processing system has the current combined calibration for each measurement channel. System calibrations reduce this task. This bookkeeping task can also be reduced when devices such as multiplexers, amplifiers, filters, and even transducers have *standardized* calibrations.

The calibration procedures discussed so far simply involve determining and documenting the current condition of the device. In the standardizing approach, a defined specification is used by the calibration facility as an adjunct to the requirement. Any deviation of the device from that requirement is adjusted out before final release of the device. While this sounds simple, often components that allow adjustment are affected by the aircraft environment, particularly vibration, and the useability of the device is reduced.

Two other considerations of system calibrations are accuracy limitations and the ability to compare data with previous data sets. Often the *standard* measurement device in system calibrations is the encoder. If it is used, it may become the limiting device in the overall accuracy obtainable for the calibrations. Also since the

measurement string will seldom have the same serial numbered devices installed for a statistically significant number of calibrations, comparison of calibrations to spot subtle changes is almost impossible.

8.10.2 System calibration

A system calibration allows the designer to know the overall performance of the measurement string. No mathematical combination of calibrations is necessary as only the end-to-end data are gathered. But if any one device in the string fails, a complete recalibration is required. If the failure is in a component at the measured phenomenon end of the string, the recalibration may not be a serious problem. If the failure is in the encoder end of the string, the recalibration of a multitude of channels could cause significant delay in test missions. Again, if standardized calibrations are used, replacement will only cause small errors.

Another consideration on system calibration is similar to finesse. The term finesse relates to the effect of the transducer on the measurand. Another effect that must be considered in the calibration process is the effect of the measurement on the transducer. For example, turbine type flowmeters are susceptible to turbulence in the fluid. Manufacturers recommend "flow straighteners" and lengths of straight pipe be placed ahead of the device. Often this is not possible so calibration of the flowmeter must be done using production tubing. Other examples of similar effects include: lag effects of pneumatic piping on pressure measurements, resonance of structures on vibration and acoustics measurements, bending of structures on acceleration, and rate or position measurements. While system calibration can find (or mask) some of these effects, others must be considered. To perform a proper calibration, parts of the aircraft may need to be included in the procedure. If the procedure can not be performed on the aircraft, the parts will need to be removed and included in the laboratory calibration. (see Chapter 4).

8.10.3 Combination component/system calibration

It is often impossible to physically separate the various portions of the measurement string for individual calibrations. For example, a linkage to translate control surface positions to an angular or linear motion may be easier to calibrate using the transducer that measures the linkage motion (Ref. 8.7). In that case, a calibration of the transducer in the laboratory to ascertain its acceptability followed by a field calibration using the complete acquisition system to read the information would be an appropriate approach. Another reason for combined calibration approaches is to determine once, prior to the first flight, the overall performance of the measuring system. The results of the systems calibration can be compared to the statistical combination results to provide confidence in the design. A number of critical measurements may be selected for this purpose and the appropriate input equipment obtained to calibrate them. Once these calibrations are completed and the designer has confidence in the approach, any subsequent calibrations are performed as individual component calibrations and combined mathematically.

8.11 AUTOMATED CALIBRATION

Many calibration facilities are now becoming automated. The input function, output reading, data reduction, and even the insertion of results into the flight data processing system can and are being done automatically. This places more burden on the instrumentation engineer as he is forced to depend on the talents of the computer programmer to interpret both the engineer's requirements and the capabilities of the equipment that performs the calibration.

This automation greatly improves the ability to handle the necessary record-keeping. Easy access to calibration histories of individual items or like items provide the designer with an early look at the capabilities of items he can use in his design. The histories also provide a means of predicting the recalibration interval. Additionally, these histories provide a source of back-up data in the event the designer's personal filing system or the data processing facility's files fail.

8.12 PRE/POST/IN-FLIGHT CALIBRATION

The emphasis of this section is on periodic calibration. One area that must not be overlooked is actions that can be taken before, after, or during each flight to insure the integrity of each data channel. The system designer, in conjunction with the test engineer, can utilize known inputs from either the air vehicle or the environment to verify operation. Measurement of ambient temperature and pressure conditions, performing preflight or post flight activities at a known latitude/longitude, etc., will allow related measurements to be verified. Movable surfaces can be rigged or set to known positions for verification. Specific flight maneuvers can be conducted to exercise transducers and allow flight-by-flight comparison of specific channels or comparison of the relationship of several channels. Transducers can be disconnected manually or through the use of relays from signal

conditioning and a precision voltage substituted, calibration resistors can be inserted to incrementally change transducer output values or signal conditioning inputs can be shorted to verify the operation of the remainder of the devices in the channel. While breaking a connection will allow some information on the operation to be determined, it must be tempered with the knowledge that reconnection might not be performed properly, resulting in the loss of data (Ref. 8.8). Addition of components for voltage or resistor insertion or shorting inputs must be tempered by the additional complexity of the system and its higher potential for failure.

8.13 PLANNING

Planning for calibrations is often the most overlooked requirement. The designer needs to consider that time is required to:

- acquire the necessary calibration equipment (particularly that needed for dynamic calibrations),
- have the equipment calibrated by a standards organization,
- prepare and validate calibration procedures (as well as software),
- train operating personnel and provide the space and utility connections in the calibration facility.

Failure to coordinate calibration requirements ahead of time often leads to schedule slips, poor quality data, or excessive resource expenditures to compensate for the lack of planning. The system designer must not assume that just because his organization has a particular device on hand, that the calibration facility has the capability to routinely calibrate it and routinely provide data to the customer. As each device is selected for the instrumentation system, the designer must assure that it can be calibrated.

8.14 REFERENCES

8.1 Doebelin, E.O., "Measurement Systems, Application and Design," McGraw-Hill, New York, 1983, p. 20.

8.2 ibid, p. 30.

8.3 Gracey, William, *Measurement of Aircraft Speed and Altitude*, NASA RP-1046, 1980.

8.4 Doebelin, p. 39

8.5 ibid

8.6 Borek, R.W., "Practical Aspects of Instrumentation System Installation," AGARDograph No. 160, Vol. 13, 1972, p. 123 and 132.

8.7 vander Linden, J.C. and H.A. Mensink, "Linear and Angular Position Measurement of Aircraft Components, AGARDograph No. 160, Vol 8, Jan. 1972, p. 38.

8.8 Borek, R.W., "Practical Aspects of Instrumentation System Installation," AGARDograph No. 160 Vol. 13, p. 27.

8.15 APPENDIX

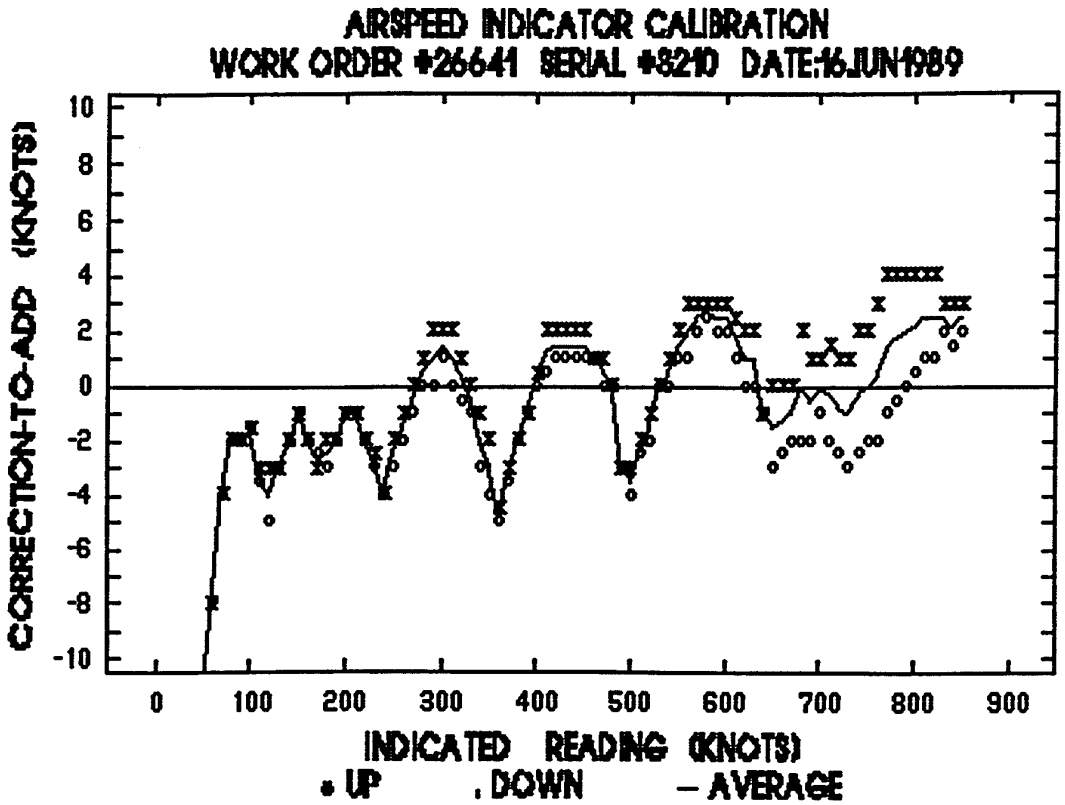

Figure A1 Airspeed Indicator Calibration.

INSTRUMENT CALIBRATION DATA REDUCTION
6510 TEST WING / TSIS
EDWARDS AIR FORCE BASE, CALIFORNIA
(805) 277-3600
AUTOVON 527-3600

Nomenclature : AIRSPEED
Type / Model : MOD-850
Part Number : E0739110059
Serial Number: 3210
Manufacturer : KOLLSMAN

Work Order # : 26641
Requestor : MCMILLAN
Calibrated By: NAKATA
Press.Amb : 27.758
Temp.Amb : 22.78

DATE CAL : 16 JUN 1989
REMARKS : CAL PER TPS SPECS

**** RAW DATA LISTING ****

Input Units : KNOTS
Output Units : KNOTS

POINT	Input	Reading(up)	Correct(up)	Reading(dn)	Correct(dn)	Hysteresis
1	50.0	61.000	-11.000	62.000	-12.000	1.000
2	60.0	68.000	-8.000	68.000	-8.000	0.000
3	70.0	74.000	-4.000	74.000	-4.000	0.000
4	80.0	82.000	-2.000	82.000	-2.000	0.000
5	90.0	92.000	-2.000	92.000	-2.000	0.000
6	100.0	101.500	-1.500	101.500	-1.500	0.000
7	110.0	113.000	-3.000	113.500	-3.500	0.500
8	120.0	123.000	-3.000	125.000	-5.000	2.000
9	130.0	133.000	-3.000	133.000	-3.000	0.000
10	140.0	142.000	-2.000	142.000	-2.000	0.000
11	150.0	151.000	-1.000	151.000	-1.000	0.000
12	160.0	162.000	-2.000	162.000	-2.000	0.000
13	170.0	173.000	-3.000	172.500	-2.500	0.500
14	180.0	182.000	-2.000	183.000	-3.000	1.000
15	190.0	192.000	-2.000	192.000	-2.000	0.000
16	200.0	201.000	-1.000	201.000	-1.000	0.000
17	210.0	211.000	-1.000	211.000	-1.000	0.000
18	220.0	222.000	-2.000	222.000	-2.000	0.000
19	230.0	232.500	-2.500	233.000	-3.000	0.500
20	240.0	244.000	-4.000	244.000	-4.000	0.000
21	250.0	252.000	-2.000	253.000	-3.000	1.000
22	260.0	261.000	-1.000	262.000	-2.000	1.000
23	270.0	270.000	0.000	271.000	-1.000	1.000
24	280.0	279.000	1.000	280.000	0.000	1.000
25	290.0	288.000	2.000	290.000	0.000	2.000
26	300.0	298.000	2.000	299.000	1.000	1.000
27	310.0	308.000	2.000	310.000	0.000	2.000
28	320.0	319.000	1.000	320.500	-0.500	1.500
29	330.0	330.000	0.000	331.000	-1.000	1.000
30	340.0	341.000	-1.000	343.000	-3.000	2.000
31	350.0	352.000	-2.000	354.000	-4.000	2.000
32	360.0	364.500	-4.500	365.000	-5.000	0.500
33	370.0	373.000	-3.000	373.500	-3.500	0.500
34	380.0	382.000	-2.000	382.000	-2.000	0.000
35	390.0	391.000	-1.000	391.000	-1.000	0.000
36	400.0	399.500	0.500	400.000	0.000	0.500
37	410.0	408.000	2.000	409.500	0.500	1.500
38	420.0	418.000	2.000	419.000	1.000	1.000
39	430.0	428.000	2.000	429.000	1.000	1.000
40	440.0	438.000	2.000	439.000	1.000	1.000
41	450.0	448.000	2.000	449.000	1.000	1.000
42	460.0	459.000	1.000	459.000	1.000	0.000
43	470.0	469.000	1.000	470.000	0.000	1.000

Figure A1 Continued.

Work Order # : 26641
Serial # : 3210

RAW DATA LISTING
Input Units : KNOTS
Output Units : KNOTS

POINT	Input	Reading(up)	Correct(up)	Reading(dn)	Correct(dn)	Hysteresis
44	480.0	480.000	0.000	480.000	0.000	0.000
45	490.0	493.000	-3.000	493.000	-3.000	0.000
46	500.0	503.000	-3.000	504.000	-4.000	1.000
47	510.0	512.000	-2.000	512.500	-2.500	0.500
48	520.0	521.000	-1.000	522.000	-2.000	1.000
49	530.0	530.000	0.000	530.000	0.000	0.000
50	540.0	539.000	1.000	540.000	0.000	1.000
51	550.0	548.000	2.000	549.000	1.000	1.000
52	560.0	557.000	3.000	559.000	1.000	2.000
53	570.0	567.000	3.000	568.000	2.000	1.000
54	580.0	577.000	3.000	577.500	2.500	0.500
55	590.0	587.000	3.000	588.000	2.000	1.000
56	600.0	597.000	3.000	598.000	2.000	1.000
57	610.0	607.500	2.500	609.000	1.000	1.500
58	620.0	618.000	2.000	620.000	0.000	2.000
59	630.0	628.000	2.000	630.000	0.000	2.000
60	640.0	641.000	-1.000	641.000	-1.000	0.000
61	650.0	650.000	0.000	653.000	-3.000	3.000
62	660.0	660.000	0.000	662.500	-2.500	2.500
63	670.0	670.000	0.000	672.000	-2.000	2.000
64	680.0	678.000	2.000	682.000	-2.000	4.000
65	690.0	689.000	1.000	692.000	-2.000	3.000
66	700.0	699.000	1.000	701.000	-1.000	2.000
67	710.0	708.500	1.500	712.000	-2.000	3.500
68	720.0	719.000	1.000	722.500	-2.500	3.500
69	730.0	729.000	1.000	733.000	-3.000	4.000
70	740.0	738.000	2.000	742.500	-2.500	4.500
71	750.0	748.000	2.000	752.000	-2.000	4.000
72	760.0	757.000	3.000	762.000	-2.000	5.000
73	770.0	766.000	4.000	771.000	-1.000	5.000
74	780.0	776.000	4.000	780.500	-0.500	4.500
75	790.0	786.000	4.000	790.000	0.000	4.000
76	800.0	796.000	4.000	799.500	0.500	3.500
77	810.0	806.000	4.000	809.000	1.000	3.000
78	820.0	816.000	4.000	819.000	1.000	3.000
79	830.0	827.000	3.000	828.000	2.000	1.000
80	840.0	837.000	3.000	838.500	1.500	1.500
81	850.0	847.000	3.000	848.000	2.000	1.000

Figure A1 Concluded.

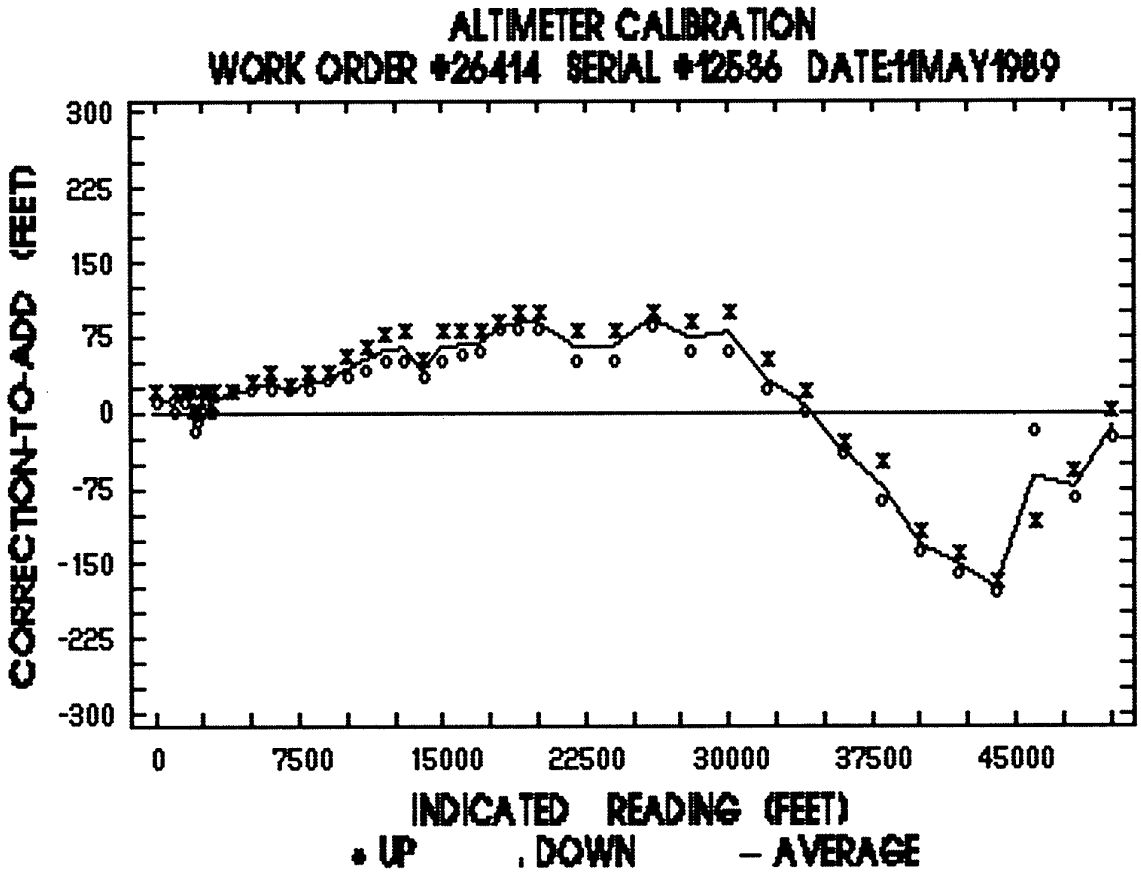

Figure A2 Altimeter Calibration.

INSTRUMENT CALIBRATION DATA REDUCTION
6510 TEST WING / TSIS
EDWARDS AIR FORCE BASE, CALIFORNIA
(805) 277-3600
AUTOVON 527-3600

Nomenclature : ALTIMETER
Type / Model : AAU34
Part Number : 3252022-0101
Serial Number: 12536
Manufacturer : KOLLSMAN

Work Order # : 26414
Requestor : KAISER
Calibrated By: NAKATA
Press.Amb : 27.758
Temp.Amb : 22.78

DATE CAL : 11 MAY 1989
REMARKS : CAL PER TPS SPECS IN PNEU MODE

**** RAW DATA LISTING ****

Input Units : ALT FEET
Output Units : ALT FEET

POINT	Input	Reading(up)	Correct(up)	Reading(dn)	Correct(dn)	Hysteresis
1	0.0	-20.000	20.000	-10.000	10.000	10.000
2	1000.0	980.000	20.000	1000.000	0.000	20.000
3	1500.0	1480.000	20.000	1490.000	10.000	10.000
4	1600.0	1580.000	20.000	1580.000	20.000	0.000
5	1800.0	1780.000	20.000	1780.000	20.000	0.000
6	2000.0	2000.000	0.000	2020.000	-20.000	20.000
7	2200.0	2200.000	0.000	2210.000	-10.000	10.000
8	2400.0	2380.000	20.000	2400.000	0.000	20.000
9	2600.0	2580.000	20.000	2580.000	20.000	0.000
10	2800.0	2780.000	20.000	2800.000	0.000	20.000
11	3000.0	2980.000	20.000	3000.000	0.000	20.000
12	4000.0	3980.000	20.000	3980.000	20.000	0.000
13	5000.0	4970.000	30.000	4980.000	20.000	10.000
14	6000.0	5960.000	40.000	5980.000	20.000	20.000
15	7000.0	6975.000	25.000	6980.000	20.000	5.000
16	8000.0	7960.000	40.000	7980.000	20.000	20.000
17	9000.0	8960.000	40.000	8970.000	30.000	10.000
18	10000.0	9945.000	55.000	9965.000	35.000	20.000
19	11000.0	10935.000	65.000	10960.000	40.000	25.000
20	12000.0	11925.000	75.000	11950.000	50.000	25.000
21	13000.0	12920.000	80.000	12950.000	50.000	30.000
22	14000.0	13950.000	50.000	13965.000	35.000	15.000
23	15000.0	14920.000	80.000	14950.000	50.000	30.000
24	16000.0	15920.000	80.000	15945.000	55.000	25.000
25	17000.0	16920.000	80.000	16940.000	60.000	20.000
26	18000.0	17910.000	90.000	17920.000	80.000	10.000
27	19000.0	18900.000	100.000	18920.000	80.000	20.000
28	20000.0	19900.000	100.000	19920.000	80.000	20.000
29	22000.0	21920.000	80.000	21950.000	50.000	30.000
30	24000.0	23920.000	80.000	23950.000	50.000	30.000
31	26000.0	25900.000	100.000	25915.000	85.000	15.000
32	28000.0	27910.000	90.000	27940.000	60.000	30.000
33	30000.0	29900.000	100.000	29940.000	60.000	40.000
34	32000.0	31950.000	50.000	31980.000	20.000	30.000
35	34000.0	33980.000	20.000	34000.000	0.000	20.000
36	36000.0	36030.000	-30.000	36040.000	-40.000	10.000
37	38000.0	38050.000	-50.000	38090.000	-90.000	40.000
38	40000.0	40120.000	-120.000	40140.000	-140.000	20.000
39	42000.0	42140.000	-140.000	42160.000	-160.000	20.000
40	44000.0	44170.000	-170.000	44180.000	-180.000	10.000
41	46000.0	46110.000	-110.000	46020.000	-20.000	90.000
42	48000.0	48060.000	-60.000	48085.000	-85.000	25.000
43	50000.0	50000.000	0.000	50025.000	-25.000	25.000

Figure A2 Concluded.

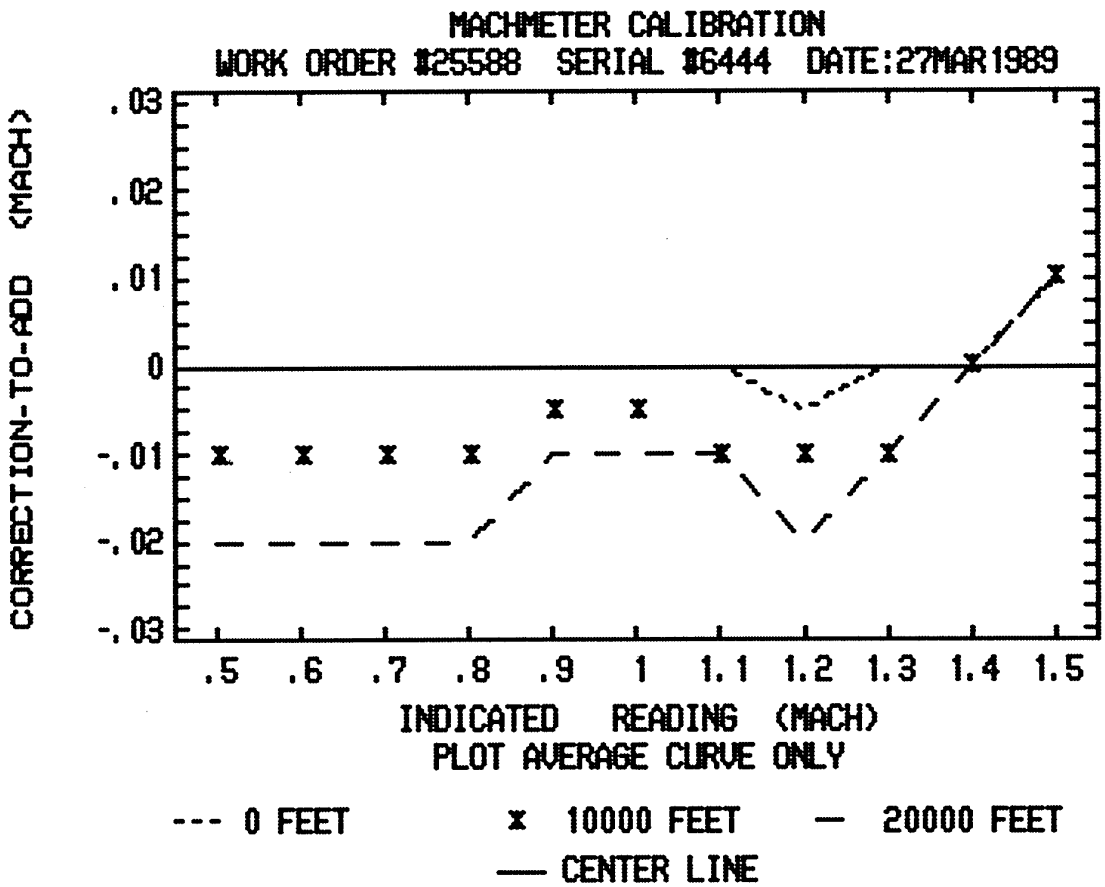

Figure A3 Machmeter Calibration: 0–30,000 ft.

INSTRUMENT CALIBRATION DATA REDUCTION
6510 TEST WING / TSIS
EDWARDS AIR FORCE BASE, CALIFORNIA
(805) 277-3600
AUTOVON 527-3600

Nomenclature : MACHMETER
Type / Model : 950EX-4-03
Part Number : N/A
Serial Number: 6444
Manufacturer : KOLLSMAN

Work Order # : 25588
Requestor : MCMILLAN
Calibrated By: NAKATA
Press.Amb : 27.758
Temp.Amb : 22.78

DATE CAL : 27 MAR 1989
REMARKS : CAL PER TPS SPECS

**** RAW DATA LISTING ****

Input Units : MACH
Output Units : MACH
Readings for 0 feet altitude

POINT	Input	Reading(up)	Correct(up)	Reading(dn)	Correct(dn)	Hysteresis
1	0.5	0.500	0.000	0.500	0.000	0.000
2	0.6	0.600	0.000	0.600	0.000	0.000
3	0.7	0.700	0.000	0.700	0.000	0.000
4	0.8	0.800	0.000	0.800	0.000	0.000
5	0.9	0.900	0.000	0.900	0.000	0.000
6	1.0	1.000	0.000	1.000	0.000	0.000
7	1.1	1.100	0.000	1.100	0.000	0.000
8	1.2	1.200	0.000	1.210	-0.010	0.010
9	1.3	1.300	0.000	1.300	0.000	0.000
10	1.4	1.400	0.000	1.400	0.000	0.000
11	1.5	1.490	0.010	1.490	0.010	0.000

Readings for 10000 feet altitude

POINT	Input	Reading(up)	Correct(up)	Reading(dn)	Correct(dn)	Hysteresis
12	0.5	0.510	-0.010	0.510	-0.010	0.000
13	0.6	0.610	-0.010	0.610	-0.010	0.000
14	0.7	0.710	-0.010	0.710	-0.010	0.000
15	0.8	0.810	-0.010	0.810	-0.010	0.000
16	0.9	0.900	0.000	0.910	-0.010	0.010
17	1.0	1.000	0.000	1.010	-0.010	0.010
18	1.1	1.110	-0.010	1.110	-0.010	0.000
19	1.2	1.210	-0.010	1.210	-0.010	0.000
20	1.3	1.310	-0.010	1.310	-0.010	0.000
21	1.4	1.400	0.000	1.400	0.000	0.000
22	1.5	1.490	0.010	1.490	0.010	0.000

Readings for 20000 feet altitude

POINT	Input	Reading(up)	Correct(up)	Reading(dn)	Correct(dn)	Hysteresis
23	0.5	0.520	-0.020	0.520	-0.020	0.000
24	0.6	0.620	-0.020	0.620	-0.020	0.000
25	0.7	0.720	-0.020	0.720	-0.020	0.000
26	0.8	0.820	-0.020	0.820	-0.020	0.000
27	0.9	0.910	-0.010	0.910	-0.010	0.000
28	1.0	1.010	-0.010	1.010	-0.010	0.000
29	1.1	1.110	-0.010	1.110	-0.010	0.000
30	1.2	1.220	-0.020	1.220	-0.020	0.000
31	1.3	1.310	-0.010	1.310	-0.010	0.000
32	1.4	1.400	0.000	1.400	0.000	0.000
33	1.5	1.490	0.010	1.490	0.010	0.000

Figure A3 Concluded.

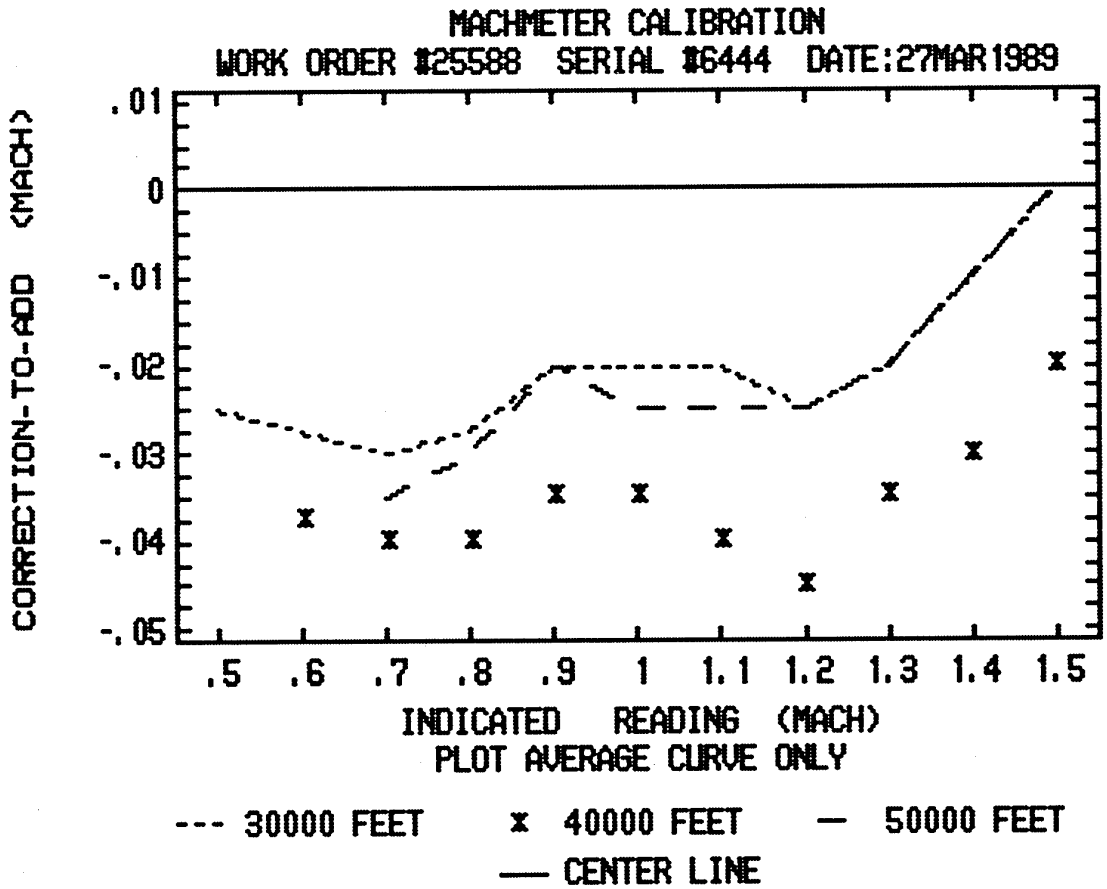

Figure A4 Machmeter Calibration: 30–50,000 ft.

Work Order # : 25588
Serial # : 6444

RAW DATA LISTING
Input Units : MACH
Output Units : MACH
Readings for 30000 feet altitude

POINT	Input	Reading(up)	Correct(up)	Reading(dn)	Correct(dn)	Hysteresis
34	0.5	0.520	-0.020	0.530	-0.030	0.010
35	0.6	0.625	-0.025	0.630	-0.030	0.005
36	0.7	0.730	-0.030	0.730	-0.030	0.000
37	0.8	0.825	-0.025	0.830	-0.030	0.005
38	0.9	0.920	-0.020	0.920	-0.020	0.000
39	1.0	1.020	-0.020	1.020	-0.020	0.000
40	1.1	1.120	-0.020	1.120	-0.020	0.000
41	1.2	1.225	-0.025	1.225	-0.025	0.000
42	1.3	1.320	-0.020	1.320	-0.020	0.000
43	1.4	1.410	-0.010	1.410	-0.010	0.000
44	1.5	1.500	0.000	1.500	0.000	0.000

Readings for 40000 feet altitude

POINT	Input	Reading(up)	Correct(up)	Reading(dn)	Correct(dn)	Hysteresis
45	0.6	0.635	-0.035	0.640	-0.040	0.005
46	0.7	0.740	-0.040	0.740	-0.040	0.000
47	0.8	0.840	-0.040	0.840	-0.040	0.000
48	0.9	0.930	-0.030	0.940	-0.040	0.010
49	1.0	1.030	-0.030	1.040	-0.040	0.010
50	1.1	1.140	-0.040	1.140	-0.040	0.000
51	1.2	1.240	-0.040	1.250	-0.050	0.010
52	1.3	1.335	-0.035	1.335	-0.035	0.000
53	1.4	1.430	-0.030	1.430	-0.030	0.000
54	1.5	1.520	-0.020	1.520	-0.020	0.000

Readings for 50000 feet altitude

POINT	Input	Reading(up)	Correct(up)	Reading(dn)	Correct(dn)	Hysteresis
55	0.7	0.730	-0.030	0.740	-0.040	0.010
56	0.8	0.830	-0.030	0.830	-0.030	0.000
57	0.9	0.920	-0.020	0.920	-0.020	0.000
58	1.0	1.020	-0.020	1.030	-0.030	0.010
59	1.1	1.120	-0.020	1.130	-0.030	0.010
60	1.2	1.220	-0.020	1.230	-0.030	0.010
61	1.3	1.320	-0.020	1.320	-0.020	0.000
62	1.4	1.410	-0.010	1.410	-0.010	0.000
63	1.5	1.500	0.000	1.500	0.000	0.000

Figure A4 Concluded.

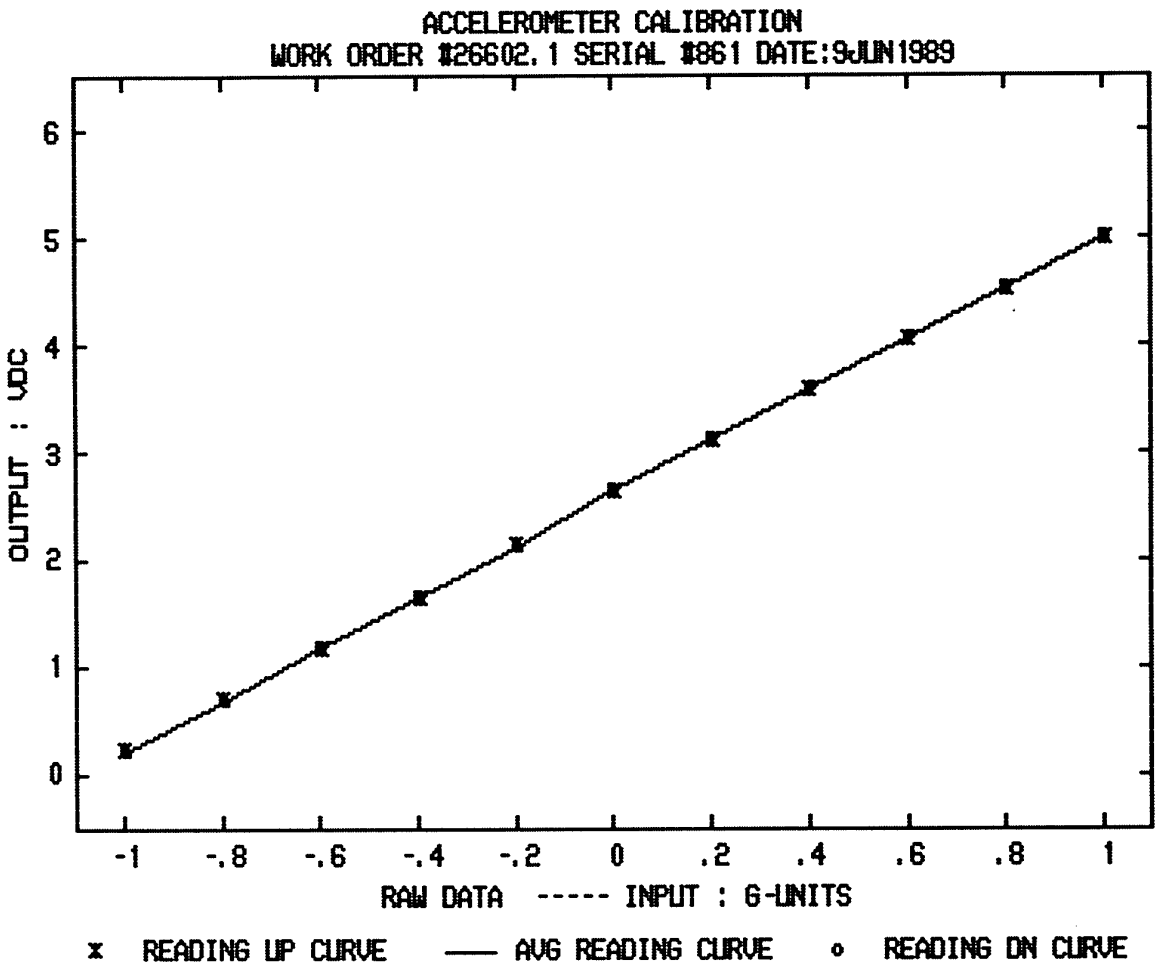

Figure A5 Accelerometer Calibration.

INSTRUMENT CALIBRATION DATA REDUCTION
6510 TEST WING / TSIS
EDWARDS AIR FORCE BASE, CALIFORNIA
(805) 277-3600
AUTOVON 527-3600

Nomenclature	: ACCEL	*Work Order #*	: 26602.1
Type / Model	: 971-4193-001	*Requestor*	: MC MILLAN
Part Number	: N/A	*Calibrated By*	: SHARPE
Serial Number	: 861	*Press. Amb*	: 27.526
Manufacturer	: SUNDSTRAND	*Temp. Amb*	: 22.22

DATE CAL : 9 JUN 1989
REMARKS : Y-AXIS 28VDC EXT.

**** RAW DATA LISTING ****

Input Units : G-UNITS
Output Units : VDC

POINT	*Input G-UNITS*	*Reading(up) VDC*	*Reading(dn) VDC*	*Avg_Reading VDC*	*Hysteresis VDC*
1	-1.000	0.2064	0.2064	0.2064	0.0000
2	-0.800	0.6839	0.6839	0.6839	0.0000
3	-0.600	1.1650	1.1650	1.1650	0.0000
4	-0.400	1.6450	1.6450	1.6450	0.0000
5	-0.200	2.1220	2.1220	2.1220	0.0000
6	0.000	2.6370	2.6370	2.6370	0.0000
7	0.200	3.1110	3.1110	3.1110	0.0000
8	0.400	3.5810	3.5810	3.5810	0.0000
9	0.600	4.0560	4.0560	4.0560	0.0000
10	0.800	4.5310	4.5310	4.5310	0.0000
11	1.000	5.0030	5.0030	5.0030	0.0000

LINEAR MODEL : Y=A+B*X

A=-1.086459
B= .4158144

Source	Df	SS	MS	Ratio
Regression	1	4.399766	4.399766	169129.9
Residual	9	2.341271E-04	2.601412E-05	
Total	10	4.4		

Figure A5 Concluded.

Chapter 9

TECHNICAL ASPECTS IN THE DESIGN OF MULTICHANNEL DATA COLLECTION SYSTEMS

by

Helmut Bothe
German Aerospace Research Establishment (DLR)
PO Box 3267
38108 Braunschweig
Germany

and

René Crabié
Electronique Serge Dassault
78, Quai Marcel Dassault
92214 St Cloud
France

9.1 INTRODUCTION

Chapters 4 to 8 have presented a discussion of design and calibration aspects of individual measuring channels. In actual flight test instrumentation systems a number of such channels are combined. That number can range from a very few for simple ad-hoc tests to several thousands for prototype tests of large and complex aircraft. This chapter discusses the methods by which these channels are combined into one multichannel flight test system.

The design of a multichannel data system must begin by a specification of the test objectives and by establishing a first measurements list. Then the basic set-up of the system can be decided upon. This must be done in close cooperation among management, flight test engineers, data processing specialists, and instrumentation engineers. In Section 9.2 aspects of this phase are discussed. When the main set-up has been defined, the system must be designed, built and prepared for installation in the aircraft (Section 9.3). During this phase a large number of tests must be executed. The nature of those tests is discussed in Section 9.4.

The specification of a multichannel data collection system must be developed by an iterative process, in which the requirements of the individual channels must be weighed against those of the overall data system. The compromise reached in this way will often be a digital system with one basic data sampling frequency, which can in a limited way be adapted to the frequency requirements of the individual channels by supercommutation and/or subcommutation. If a few channels require much higher sampling rates than the majority of the channels, it is often useful to accommodate these in a separate analog system. Such composite systems need not be completely independent: the power supplies and many of the signal conditioners can be used by both systems, their data can usually be recorded on different tracks of the same tape recorder and most of the test equipment can be used by both.

It is in principle possible to use transducers which already function in the operational system of the aircraft for flight test purposes too. That can appreciably reduce the cost of the flight test system, but there are two important requirements: the transducer must meet the requirements of the flight test system and adequate measures must be taken to ensure the integrity of the essential aircraft systems, even if a failure in the flight test system should occur.

Often the flight test system must be designed in such a way that existing ground facilities for data demultiplexing, processing, evaluation and presentation can be used without or with only minor additions. This can be an important limitation in the development of a new system.

No simple rules can be given for these and many other problems with which the instrumentation engineer is confronted when designing a flight test data collection system. It is the engineer's task to select the best compromise which satisfies the requirements of the flight test program within the limits of the available resources.

Reliability and accuracy are the leading considerations in the choice of the components and of the design methods for the system and its wiring. The final system must prove itself during intensive testing in the course of the construction and the flight test operations, and the test equipment must be designed as part of the overall system. The efficiency of these tests will to a large degree depend on the knowledge and experience of the people who maintain and operate the system. The selection and training of these personnel, which must often work under difficult circumstances on the ground or in flight, can have an important influence on the success of the data collection operation.

9.2 SYSTEM CONCEPT

9.2.1 System modification versus new development

Updating an existing data system is generally more economical and requires less lead time than the development of a completely new system. One important aspect is that much experience will be available on the operation (and weak points) of the existing system. The existing system must then meet the requirements of the new test program without or with little change. Such characteristics as size, weight, and capacity usually cannot be changed economically.

If the encoder is programmable, it is often possible to modify an *existing system* to a considerable extent. New transducers and signal conditioners can then be incorporated. Sampling rate, frequency response, and accuracy can often be increased to a limited extent. Sampling rates can be increased or decreased by supercommutation or subcommutation. Higher frequency response can be obtained with continuous-trace recorders by using faster galvanometers and higher paper speeds, with FM recording by using higher sub-carrier frequencies and higher tape speeds. If the existing system can meet the accuracy requirements of all but a very few channels, it may be possible to use coarse-fine techniques or variable word length.

If the test program is relatively small and the data rates are low, the use of photo-panel recording or continuous-trace recording may be adequate. If a computerized ground station is available, it will usually be more economical to use onboard recording on tape or static memories or telemetry even for small-scale tests. The advantages of computer processing, such as reduced turn-around time, less manual processing, and better presentation of the results will often outweigh the higher cost of preparation and installation of the flying equipment, and of the computer programming.

Though many data systems have a considerable growth potential, if the flight test programme differs significantly from those previously made with the data system, it may be necessary to develop a completely *new system.* The development time and the cost of such a new system will often be considerable, but if the growth potential of the new system is sufficient for several future applications, it may be the most economical solution. For larger systems, the possibilities of extensive *automation* should be carefully considered.

9.2.2 Choice of the major components

An important decision that must be made before the instrumentation system can be specified, is whether *online data processing* will be required. Real-time processing has the following advantages:

- Flight safety is increased by monitoring calculated and processed parameters by the test team.
- Results acquired in real time can enable more tests to be performed in the course of a given flight.
- Health monitoring of the test installations becomes possible during flight, hence the turn around time is decreased.
- The availability of test results allows a more efficient postflight debriefing.

Online processing can, in principle, be applied in two ways:

- Online processing of a certain number of parameters carefully selected for the flight considered.
- Online processing of all data, so that a complete analysis of the results is available by the time the aircraft lands.

The first method has been in use for a long time. It has been found that the flight time and the number of flights required for testing advanced aircraft can be considerably reduced if a number of important parameters can be continuously observed in real time by specialists. In systems for small aircraft this is achieved by telemetering these data to the ground, where they are displayed after online processing in a computer, but for large aircraft, systems using onboard computation and display are also beneficial. The need for such a system should be stated early in the development program, as it will have considerable effect on the general layout of the instrumentation system.

The second method, i.e., online processing of all data, is technically possible using telemetry and a powerful ground computer station. Another approach only possible for large aircraft is sometimes accomplished by the installation of a complete onboard computing system together with the necessary peripheral equipment. It would seem, however, that these approaches will, in some instances, not be economically justifiable. Especially for the comparison of results against complex math models requiring a very extensive data processing installation, off line processing is usually preferred.

A measurements list defines the characteristics required of each individual measuring channel. On the basis of an analysis of all these requirements and of the equipment available on the market, it will then have to be decided whether they can be handled by one system or whether a composite system is necessary, what kind(s) of system(s) will be used, and which parameters will be handled by each system. Eventually a choice will have to be made from (a combination of) the following possibilities:

- Onboard recording (for details see Chapter 11)
  - photo panel recording
  - trace recording
    - analog strip chart
    - digital printer
  - magnetic tape recording (for details see Chapters 2 and 11)
    - video
    - analog FM
    - analog direct
    - digital direct (PCM)
    - digital computer compatible
    - digital noncomputer compatible
- Telemetry (for details see Chapter 12)
  - analog
  - digital
- Onboard cameras or closed-circuit television (for the observation of external events such as flow patterns, external store release, ice accretion)
- Onboard cameras for photogrammetric measurements (aircraft trajectories, position fixing)
- Ground based equipment (photo theodolites, laser trackers, radar, telemetry ground station, etc.) (for details see Chapter 13)

Except for small single-purpose tests, it is almost inevitable that more than one type of data collection system will be used during a flight test program. The unique capabilities of each system and the broad spectrum requirements usually make it impossible for one system to handle all the data. For a typical flight test program a *composite data collection system* may be required which involves the simultaneous use of the following systems:

- A digital system for basic airplane and engine performance data
- An FM system for vibration and acoustic survey
- Fuselage-mounted cameras for recording wool-tuft patterns on the wing

- A continuous-trace recording system for quick-look purposes
- Photo theodolites, laser trackers or radar for trajectory measurements during takeoff and landing tests
- A timing system for the synchronization of data from different sources tests

Details on most of these systems are given in Chapters 11 to 13. A few words can be said here about the application of cameras. Film or photo cameras are used for flow investigations with wool tufts, investigations on the shape of ice formations on the wing, control surfaces, and engine intakes, measurements of wing and fuselage bending, observation of external store release, etc. Closed-circuit television is also used for some of these tasks, either for real-time monitoring by observers in the aircraft or on the ground (if video radio transmission is possible), or for playback of video magnetic tapes after a flight. Photo cameras are also often used for the measurement of aircraft trajectories, both from the ground (photo theodolites) and from the aircraft as in some methods for takeoff and landing measurements.

9.2.3 Onboard recording and/or telemetry

One of the first choices that must be made is whether telemetry or onboard recording, or both, will be used. Even if telemetry is used during part or during the whole program, the data will, in most cases, also be recorded on board the aircraft. The choice of the telemetry is based on one or more of several specific reasons. The most important are:

- Hazardous flying, such as high-speed and flutter testing to expand the operational envelope of an airplane. This requires evaluation of data on each condition before going to the next, without exposing the crew any more than necessary to the hazardous conditions.
- Participation of qualified specialists in critical decisions. The data are also protected in the event of an accident. In this type of testing, only a limited number of critical parameters need be telemetered.
- Testing of a small vehicle. The fact that a telemetry transmitter usually is much smaller than a recorder with adequate data capacity may lead to the choice of a telemetry system.
- Online processing of telemetered data. This has been discussed in Section 9.2.2.

Telemetry has, however, certain disadvantages:

- The aircraft must be operated within "line of sight" of the receiving antenna. This may seriously restrict the area in which flight tests can be made unless the operational range of the telemetry link is considerably extended by the operation of a second relay aircraft.
- The radiation pattern of the onboard antenna many times suffers from deep nulls in certain angular areas which deteriorates the continuous data transmission. A second antenna for space diversity can reduce this problem.
- The radio link is susceptible to interference from other transmitters and man made noise. The resulting loss of data can have a very serious effect on the progress of the flight testing, especially if online processing is used. For this reason onboard recording is generally used as a back-up.
- The total system is more complex and therefore more liable to malfunctioning. System checking is more complicated for this reason and also because it must include both the airborne and the ground equipment, and the radio link between them.
- Data security is compromised because others can also receive the signal unless advantage is taken of techniques for signal hiding like, e.g., spreading the spectrum.

Detailed discussions of onboard recording and telemetry are given in Chapters 11 and 12.

If the use of telemetry is envisaged, the number of parameters to be transmitted and the sampling rate must be selected first since this can have a considerable impact on the choice of the onboard data acquisition equipment. In many cases the most economical solution is to use the same data acquisition electronics for recording and telemetry.

In many flight test programs there is a requirement for *protection* of at least a limited part of the flight data *in the case of a crash.* As mentioned before, this can be done by telemetry. If no telemetry is available, crash-proof containers can be used for the recording medium. This approach is applicable to cameras, magazines of continuous trace recorders, and for tape recorders. In most cases, a separate crash-recording system of the commercially available type adopted by airlines is used. These have still limited data recording capacity, but new technology has resulted in high-capacity static memories (16 Mbits), and the use of data-compression systems with ratios lying between 6 and 12, depending on the type of aircraft and type of flight, has remarkably improved the performance of crash recorders.

9.2.4 Methods of onboard recording and telemetry

Analysis of any set of flight test parameters will show that a division into three main categories is possible with respect to required frequency spectrum and accuracy:

- Low-frequency data (up to about 5 Hz); these are aircraft and system analog parameters, parameters obtained on data buses and discrete pulses. For some of these data a high accuracy may be required (e.g., 0.1% full-scale error), but for other low-frequency data a high accuracy will not be important.
- Medium-frequency data (up to about 30 Hz); these are again aircraft and system analog parameters, especially from control systems, where proper phase transmission is important. For this type of data errors of about 1% full scale will usually be tolerated.
- High-frequency data (up to several kHz); these are acceleration parameters for flutter tests and parameters to measure stress and vibration. For these data a relatively low accuracy (2 to 10% full-scale error) is usually acceptable.

The first two categories are suitable for digital systems, and the third is usually handled by analog systems. In the case of a high-capacity system it may be possible to accommodate high-frequency parameters by cross-strapping a number of input channels, i.e., supercommutation, and low-frequency channels by subcommutation (Section 9.3).

Digital tape recording and telemetry (see Chapters 11 and 12) are mostly preferred in all large flight test programs. The principal reason for this is that as soon as the signal has been digitized, there is no further loss of accuracy during the data manipulation, transmission, and storage. Digital recording and telemetry are therefore especially suitable for high-accuracy data.

At first thought it would seem to be advantageous if the tapes recorded on board the aircraft could be read directly by a standard digital computer, i.e., if the onboard system produced a computer-compatible tape or disc. In practice, this has a number of disadvantages which are:

- The tolerances of standard digital computer tapes with respect to bit density and skew are so close that even good flight recorders often cannot remain within these tolerances when subjected to the linear and angular accelerations normally encountered during flight tests.
- Disc drive systems usually do not meet the onboard acceleration and vibration requirements.
- Standard digital computers require half-inch tapes with data recorded in parallel on either seven or nine tracks at closely specified bit densities. At the bit densities achievable in parallel recording, the number of data points per tape is relatively low. In order to achieve a better utilization of the tapes, other formats are often preferable, for instance one inch wide tapes with 14, 16 or 31 tracks or serial recording with extremely high bit densities.
- Standard digital computers require "inter record gaps" after a certain number of data words. During these gaps no data must be recorded. The flight test data are, however, generated continuously. Some kind of buffer storage is then required which involves a considerable increase in the complexity of the airborne equipment.

Because in most data preprocessing stations a special computer is available for quick look and editing, it is generally possible to use this computer also for converting the flight tapes to a computer-compatible format. Engineering unit conversion of data can be included also at this stage.

Analog data collection systems are primarily used for recording and for transmission of high-frequency signals. Interpretation of these data is often more conveniently done using traces showing the time histories of the measured parameters. Analog tape recording can also be more convenient if analog data processors are to be used, as for instance in some types of frequency analysers.

Analog systems can produce *continuous data or sampled data*; digital systems always produce sampled data. Analog sampled data systems include photo panels, and pulse amplitude modulation (PAM) methods. Continuous-trace recorders and direct-recording tape recorders produce continuous data. For all sampled systems it must be kept in mind that the sampling frequency must always be higher (2x times and often appreciably higher) than the highest frequency which is of interest for the measurement, in order to reduce the effect of aliasing errors (see Chapter 7).

The advantage of analog tape recording over trace recording and photo panels is that the signals can be reproduced in electrical form when the tape is replayed. This makes it possible to use automatic or near-automatic data processing, including digitizing on the ground. Direct recording and FM modulation techniques are generally used for analog tape recording and, after modulation on an RF carrier, also for telemetry. These modulation techniques are described in Chapters 11 and 12.

Combinations of different systems using the same tape recorder can be very efficient. PCM and FM data can be recorded on different tracks of the same tape recorder as long as there is a suitable tape speed for both systems. For telemetry transmission of these signals usually two different carrier frequencies are required, unless the spectral distribution of both signals allows–in case of additional filtering or multiplexing–a linear mixing of the signals on one channel (Chapter 12).

In many systems slow analog sampled data after conversion to digital format are mixed with digital data from avionics data buses or onboard computers (see Section 9.3.2.3). The composite PCM message is then usually organized after the world-wide used IRIG Standard (Ref. 9.1), where the messages are arranged in long and short cycles. These are of fixed length and the data channels are placed in assigned positions. There are known other special systems with different organization, like the Daniel Standard (France, Ref. 9.2) which is organized in long cycles. Data of analog origin and digital data are allocated in different zones, and the length of the digital zone varies with the volume of data to be acquired.

Photo panels are still used occasionally because of their extreme flexibility (which is an important advantage in small ad-hoc tests) and because many types can be used for visual monitoring during the recording. Continuous-trace recorders can record up to 50 parameters at moderate cost and are still occasionally used for the recording of dynamic data, especially if the measurements involve the phase relationship between two or more variables. This type of recorder is useful for those types of tests where the interpretation can be made directly from the recorded time histories.

9.3 TECHNICAL DESIGN AND DEVELOPMENT CONSIDERATIONS

9.3.1 Introduction

At a certain point of time, the system concept has been sufficiently finalized after discussions among aircraft designers, flight test engineers, data processing specialists, and instrumentation engineers to permit the initiation of the detailed development of the new components. It should be realized that all future possibilities are determined by the constraints of these choices.

The design of the individual channels has been discussed in some detail in Chapters 4, 5, and 6. Some general and organizational aspects have been dealt with in Chapter 2. It is the intention of this chapter to discuss in general terms some topics relevant to the design and development of a complete system and also to discuss some of the problems which arise when the constituent parts of an instrumentation system are brought together (integrated) and when the complete instrumentation system is installed in the test aircraft. Some of these interface problems will be dealt with in separate sections.

It should be noted that instrumentation engineering has progressed a long way in the last few years. Attempts to "connect a few components together" will almost surely result in a system that is inadequate for even the most rudimentary measurements. Adequate attention must be given to inter-element effects, including

impedance matching, frequency response, ground loops, and shielding. The analytical determination of overall system operating characteristics requires an intimate knowledge of the detailed, quantitative descriptions of the characteristics of each element in the system. Instrumentation engineering is a profession, and a well-equipped, trained, and experienced team is an absolute requirement for the successful completion of a flight test program.

The range of requirements of the various programs and system capabilities is so diversified that it is very difficult to buy a complete, off-the-shelf system that satisfies all needs of a particular flight test program. As a consequence, program requirements are met in one of three ways, depending upon the in-house resources and capabilities available:

- The complete design and construction is done in-house.
- The components are procured and their integration is done in-house.
- The complete system is procured on contract.

Except for the number of people required, the involvement of the user's organization is about the same. Even if the total system is procured, competent staff is needed to prepare the detailed technical specifications, monitor the design and construction phases, and, after delivery, perform acceptance tests and then maintain and operate the equipment.

9.3.2 Multiplexing and normalization of input signals

9.3.2.1 Continuous data channels

For data collection systems which do not use commutated data, such as continuous trace recording systems and systems using single-channel FM, each channel can more or less be designed separately. The main constraint is that all channels have to be recorded at the same recording speed. For data collection systems with multiplexing the general layout of the multiplex system must be determined at an early stage in the design.

The basic principles of multiplexing are described in Chapter 12. In systems with *frequency-division multiplexing* the main concern is to divide the channels over the available (sub)carrier frequencies so that each channel obtains its best frequency response. If the frequency spectra of all channels are similar, a constant-bandwidth system will often provide optimal results. If the spectra of the signals differ and a few of the channels have frequencies above about 300 Hz, a proportional-bandwidth system must be used.

9.3.2.2 Sampled data channels

Most modern flight test data collection systems mainly rely on *time-division multiplexing*. This is used in all digital and pulse modulation systems, and can be used in FM and direct recording and FM and AM telemetry. The first step in designing such a system is to determine the required *basic commutation rate*. This is, in principle, the highest sampling rate required for any channel, though supercommutation may be used if a few channels require a higher sampling rate than all others. It must be stressed here again that the required sampling rate is always higher than the frequency range mentioned in the measurements list. It is determined by the acceptable aliasing error in the channel. The methods to determine the required sampling rate for a given frequency spectrum are described in Chapter 7.

Once the basic commutation rate has been fixed, the *number of measurements per commutation cycle* must be determined. It is often possible to reduce the required number of channels by selecting only those which are essential for a particular flight by means of a patchboard. The number of measurements per cycle is determined by the highest number of channels required on any flight and by the amount of supercommutation and subcommutation required.

The basic commutation rate and the number of measurements are primary factors determining the design of the data collection system. They not only determine the commutation speed itself, but also the speed of the analog-to-digital converter and the signal conditioning units. When designing a new system, they should be considered very carefully because they have a large influence on the growth potential of the system.

For the design of a data collection system a parameter sampling plan is very helpful. The number of the required (e.g., 12 bit-) channels, if possible including future requirements, is plotted versus the individual

desired sampling rate. This figure usually exhibits at what sampling rates a concentration of channels occurs and hence at what sampling rates main-, sub- and supercommutation rates are at all useful. The lowest possible bit rate is achieved, if all channels are sampled exactly with the desired sampling frequency. But this usually leads to a very complex commutation system. It is the ability of the design engineer to select the sampling rates such that only one or two subcommutation rates are necessary, and at the same time the lowest possible bit rate is not exceeded by more than a factor of about 1.5 in order to keep the bandwidth of recording and transmitting equipment low.

As an example the parameter sampling plan of the DLR test aircraft ATTAS is shown in Figure 9.1. All parameters including future extensions are illustrated according to the requirements of the applications, and the lowest achievable bit rate would be 127.0 Kbit/sec including two channels for synchronisation. In this example supercommutation is not recommended due to the considerable number of channels with high sampling rate. The different possibilities of subcommutation are listed in Table 1. It makes no big difference if a subcommutation rate of 32, 20 or 16 samples/sec per channel is chosen; the lowest bit rate is exceeded by about 1.35 only. This bit rate versus lowest bit rate factor comes down to 1.2, if a second subcommutation rate is applied, and goes up to 1.9 without subcommutation. In this particular example a programmable commutating system is available, and as long as the future expansion channels are unused no subcommutation is programmed, the bit rate being 148.2 Kbit/sec.

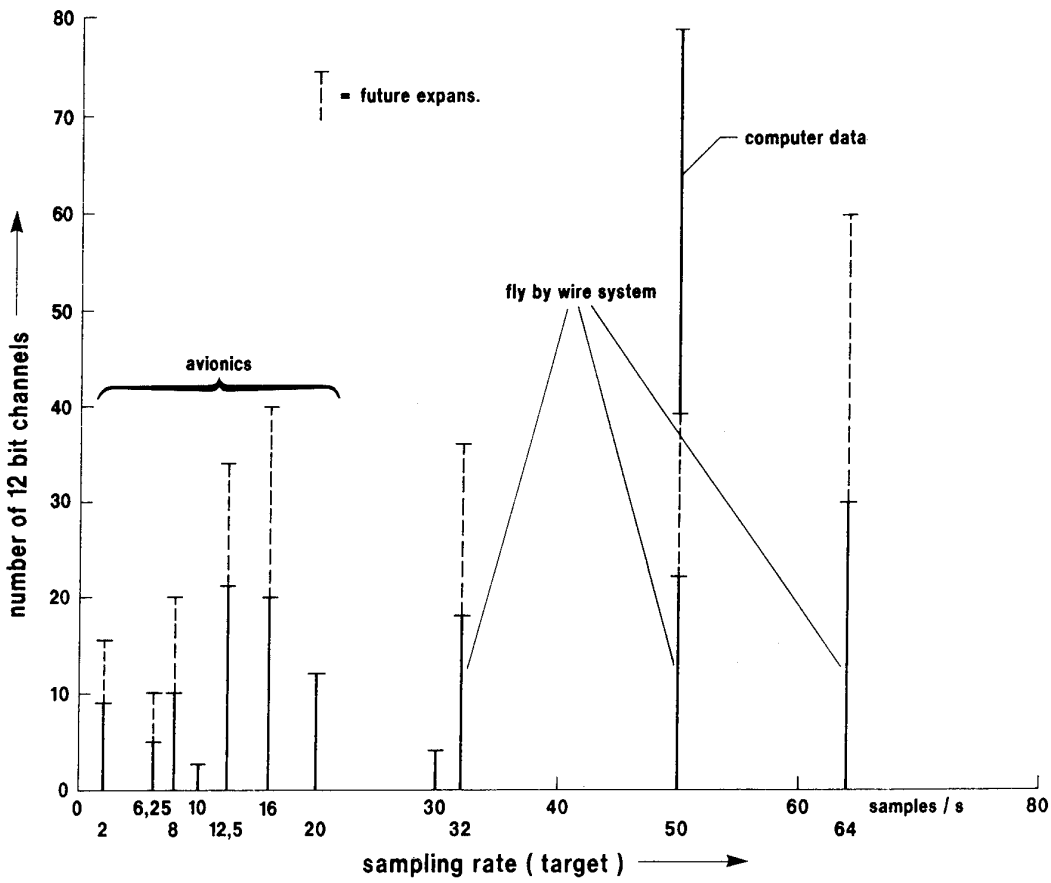

Figure 9.1. Parameter sampling plan of the DLR test aircraft ATTAS.

Table 1. ATTAS subcommutation and total bit rates (BR).

Commutation rate (samples/sec)	64	64	64	64	64	Each channel as required
Subcommutation rate (samples/sec)	32 ---	20 ---	16 ---	32 16	--- ---	--- ---
Total BR (Kbit/sec)	175.0	171.4	172.0	152.0	241.1	127.0
Actual BR versus lowest BR	1.38	1.35	1.35	1.2	1.9	1

At the present state of the art, electronic switches are used almost exclusively in the commutators, even for low-level signals. Electronic commutators are extremely versatile and can be made very small as several switches can be incorporated in one integrated circuit. Their design requires a few precautions. The resistance of the switches in the closed condition is not very low (in the order of 100 ohms), and they produce a small leakage current in the open position (in the order of 10 nanoamperes). In a properly designed circuit these characteristics will, however, hardly effect the measuring accuracy. Crosstalk, i.e., changes in the signal level of one channel caused by the signal level in another channel, can cause difficulties, especially when integrated circuits are used with many switches. This problem must be solved by proper grouping of the input channels. Notwithstanding all these effects, good results can be obtained with well-designed electronic commutators, even with low-level signals. In order to overcome in a more general manner the technological problems inherent in this type of component, time isolation of channels with the reading of quiescent values (self-calibration) between interrogations solves all the problems mentioned.

9.3.2.3 Bus data channels

The avionics equipment of civil and military aircraft nowadays is linked together by data buses for the exchange of sensor, computational or instructional information. For flight testing of the avionic systems the access of the flight test data collection system to this information is essential. Moreover many of the sensor parameters available on the buses like acceleration, velocity, and attitude information from inertial platforms, airdata from digital airdata computers, and navigational data from radio navigation systems, are also very useful for other flight test purposes. By picking up these parameters from buses the integration of many additional sensors for flight testing purposes can be avoided.

There are high-frequency digital buses (operating at 1 to 3 Mbits/sec), medium speed digital buses (100 Kbits/sec), and low speed operation buses (12–14.5 Kbits/sec). Two types of protocol have been adopted: (1) Buses of the "message" type, such as the MIL-STD-1553 bus (Ref. 9.3), constituting several messages with a header followed by data words (2) Buses of the "label" type on which each word possesses its own address. The ARINC 429 bus is of the label type (Ref. 9.4). A *digital bus acquisition unit* is capable of acquiring and multiplexing the digital parameters of several high-frequency buses and up to some 10 medium speed and slow buses.

In the case of a bus of the message type, a recognition table contains the various headers to be acquired and a selection table takes from the message the data words relating to the programmed test. In the case of a bus of the label type, data recognition and acquisition are simpler, since each parameter has its own address. System management and the acquisition and processing of parameters are possible only by the use of micro processors distributed in the various units.

9.3.2.4 General layout of the data collection system

When the basic commutation rate, the number of measurements per cycle, and the type and number of bus parameters have been selected, the general layout of the data collection system can be planned in more detail. An important factor is at which stage the signals are commutated. The most straightforward method in a digital system with analog inputs is to place the commutator directly before the analog-to-digital converter (Fig. 9.2). Then each channel has its own signal conditioner, which transforms the transducer output signal into the type of signal required by the analog-to-digital converter. This is usually a dc signal, either high-level (e.g., 0 to 5 V) or low-level (e.g., 0 to 30 mV). Other types of input signals have been used in the past (for instance pulse duration modulated (PDM) signals), but these are not very common nowadays.

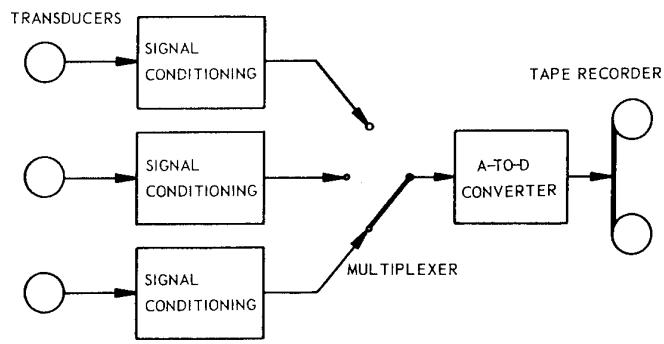

Figure 9.2. Data acquisition system with separate signal conditioners.

The method illustrated in Figure 9.2 is ideal, since each channel is independent, the only common point being the analog-to-digital converter. Its major disadvantages, however, are its cost and above all its size. The signal conditioning circuits are not applied in a very economical fashion, as each one is only used during a very brief time period of each commutation cycle. Therefore a common signal conditioner is often used for all signals of the same type. A simple example of such a system is shown in Figure 9.3. The multiplexer connects the signals from transducers with the same type of output to the associated signal conditioner, and thus the number of signal conditioners is equal to the number of types of signals. As this number may still be quite large, simple "preconditioning" circuits are sometimes provided to further reduce the number of signal conditioners. These preconditioners can include filters for individual channels, cold junction compensation for thermocouples, amplifiers or voltage dividers which adapt the electrical range of the signal, etc. The final choice of what should be included in "preconditioning" and what in "conditioning" will depend on the number of transducers of each type.

The system of Figure 9.3 still has the disadvantage that each commutation switch is connected to a predetermined signal conditioner and that, therefore, the possibilities of replacing a transducer by one with a different type of output are limited. Moreover, the problems of cost and size are not completely solved either. It is for this reason that modern systems use input multiplexing with a single conditioning and encoding channel.

An example of such a system is shown in Figure 9.4. The sequence in which the channels are scanned, and the scanning rate of each channel can be programmed separately for each flight. The single central signal conditioner will be adapted to each incoming type of signal by the program control. Automatic gain control allows the conditioning of any input signal.

This method requires high performance of components with regard to reliability, measurement repeatability, reproducibility, etc. The bandwidth of the channel must be broad to allow satisfactory stabilization of circuits between measurements. But with much care, an accuracy of the order of 3×10^{-4} can be achieved.

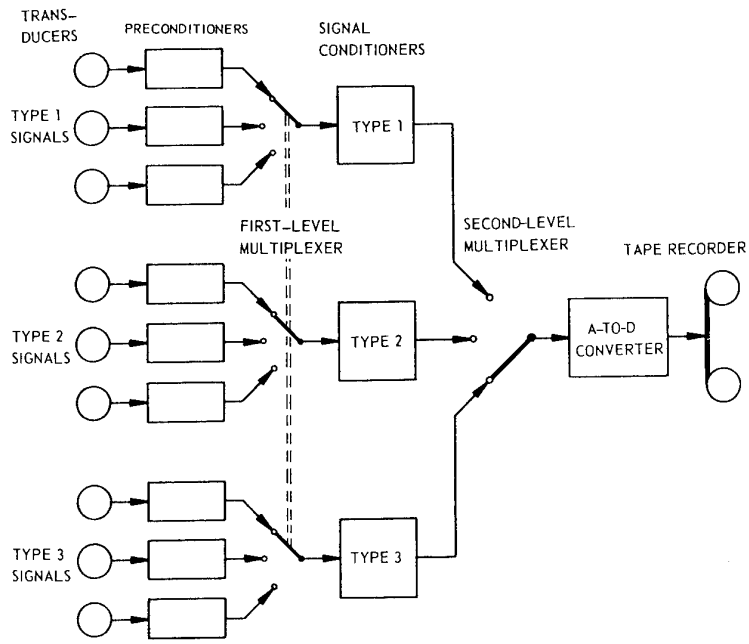

Figure 9.3. Data acquisition system with common signal conditioners.

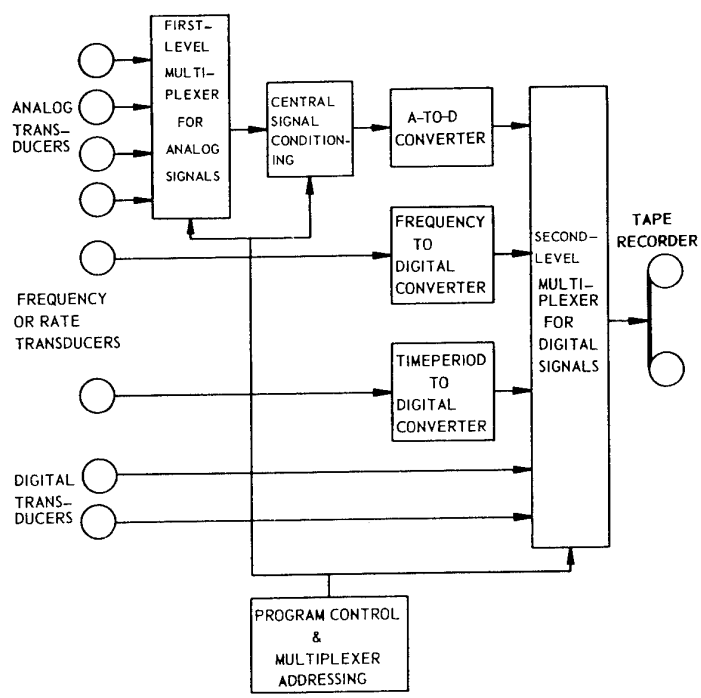

Figure 9.4. Data acquisition system with a computer-assisted multiplexer and signal conditioner.

In each system, there are a number of channels which cannot be handled by the normal commutation system. This is, for instance, the case for those pulse-rate or frequency signals whose period is much longer than

the sampling time available for each channel (for example, engine tachometers and fuel flow meters). The measurement of such signals must have a duration of at least two periods of the lowest frequency that can occur, and integration over a still longer period may be required. Such channels must have a separate analog-to-digital converter, which is sampled by the second-level multiplexer, as shown in Figure 9.4. Signals which already have the digital format are also scanned directly by this second-level multiplexer.

For large and complex flight test systems, the weight of the wiring for instrumentation can become prohibitive. This weight can be markedly reduced by *remote multiplexing*. Several systems like that of Figure 9.3 are then mounted at locations in the aircraft where large numbers of transducers are concentrated. They are controlled by a single program control unit. The digital output of each remote multiplexing unit can then be transmitted to the recording system by a single pair of wires, and only relatively few wires from the central program unit to each remote multiplexing unit are required.

In order to facilitate problems of installation in the aircraft and make use of available information on avionics data buses, especially in military aircraft, systems based on the principle of a distributed configuration are of considerable importance. Their architecture is directly derived from that of modern avionics mentioned earlier.

Designed around a data bus known as the system bus, these systems interconnect different types of units performing the following functions:

- Management
- Analog acquisition
- Digital acquisition

The installation block diagram is shown in Figure 9.5.

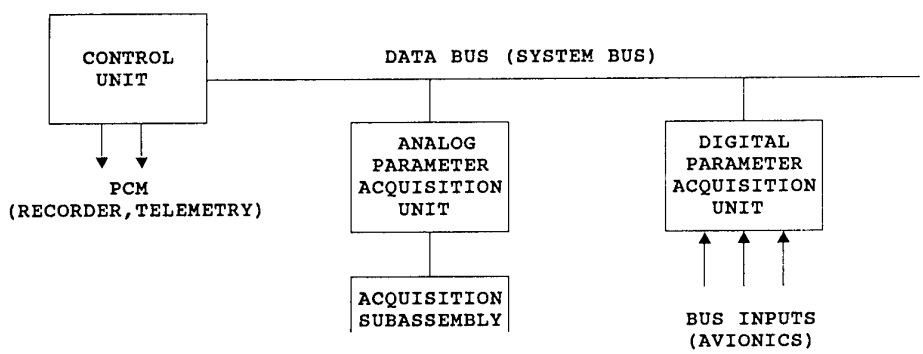

Figure 9.5. Distributed data acquisition system.

In this example the *control unit* performs the following main tasks:

- Management of the system bus providing the link to the various acquisition units by means of a microprocessor whose operation has been microprogrammed. This microprogram contains the protocols for transferring data over the system bus between units coupled to this bus.
- Distribution of acquisition programs defined by the test engineer, system initialization, information dating, reading of parameters acquired by the acquisition units by means of a processing unit controlled by a microprocessor.
- Generation of output messages for transmission to the telemetry or recording circuits by means of a microprocessor whose task is to control and format the output signals.

All these microprocessors perform different tasks by means of specific microprograms, overall coordination being provided by the processing unit microprocessor.

The *analog parameter acquisition unit* is also controlled by a microprocessor. A processing unit board controlled by a microprocessor performs the functions:

- Loading of the acquisition program sent by the management unit
- Transmission of data acquired over the system bus
- Management of the whole unit

An additional microprocessor controls information obtained from the analog parameter conditioning and digitizing subassemblies.

The *digital parameter acquisition unit* has the same microprocessor-based processing unit board as the previous unit for:

- Loading of the acquisition program sent by the management unit
- Transmission of data acquired over the system bus
- Management of the whole unit

But the acquisition and processing of digital buses on which data appear in a random manner require much more care than the analog parameter acquisition previously mentioned. The recognition tables and read tables relating to each bus input are managed by a microprocessor.

The use of microprocessors and dialoguing interfaces such as dual-access transfer memories requires much more rigour in microprograms. But this makes the whole system highly flexible with regard to operation, modifications, and development.

9.3.3 Maintenance and performance monitoring of the data collection system

Maintenance and performance monitoring are required to prevent and to correct failures and performance degradation. During the design phase measures must be taken to prepare for maintenance and performance monitoring. The overall flight test schedule must allow specific periods for routine checkout and maintenance of the instrumentation system.

Test connections necessary for a quick and efficient maintenance must be carefully planned. It is very difficult to determine in advance precisely what will have to be checked and where the weak points of the system are. Experience and familiarity with the performance of the components will provide a good basis for determining what test points must be available and what test procedures must be used. As systems often give problems at points where they were not expected, it is advisable to design the maintenance system so that every conceivable function can be tested. During the operation it will be found which checks can be omitted or can be done at longer time intervals. It is, however, very difficult to add test points or test equipment during the operational phase.

Closely related to maintenance is the aspect of performance monitoring, either on the ground or in flight. The requirements for special equipment for *performance monitoring on the ground* during preflight and postflight checks depend on the time available between flights. Less time between flights means more sophisticated checkout equipment.

A valuable aid for monitoring the performance of the instrumentation equipment is BITE (Built-In-Test-Equipment), which is often incorporated by the manufacturers of major component parts. BITE, however, only tests the functioning of that specific component. Efficient overall monitoring of magnetic tape systems can be achieved by the "read after write" method, i.e., the data are read from the tape immediately after recording. This data can then be displayed directly or can be used to check parity, code, timing, level, etc. A simpler method, which provides only slightly less coverage, is monitoring the data stream to the recorder write heads. Another effective technique is the use of calibration signals. Comparison of the measured values with the known calibration input values provides a fairly comprehensive check of the data acquisition process.

Another approach is the implementation of a health and fault management system. This is possible if a large number of parameters is acquired by the instrumentation system and is then made available in a powerful

onboard or ground computer system. By computer software the redundancy of the acquired parameters can be utilized to detect errors in the instrumentation system. For example, the information of an inertial navigation system can be checked against the data supplied by radio navigation equipment.

In-flight performance monitoring should be seriously considered. Both from a standpoint of instrumentation checking and in-flight data interpretation it is desirable to be able to monitor in flight at least some of the measurements being recorded. In most cases, some level of monitoring soon becomes cost effective, because valuable flight time can be saved in case of a failure in the instrumentation equipment. The complexity of monitoring and the method of presentation depend on the attention which can be provided by the flight test crew. In a one-pilot aircraft a single go/no-go light is about the maximum that can be allowed. This light can, however, be the output of a comprehensive self-check system. In an aircraft carrying flight test observers the necessity for such a fully automated system is less, as there is much more opportunity for improvisation. Even onboard repairs may then be feasible.

9.3.4 System integration

9.3.4.1 Integration of main components into a complete system

For the part which is common to all channels the main components (commutators, encoders, sub-carrier modulators, recorders, telemetry transmitters, etc.) are usually bought as complete units. They are available in a relatively large variety from specialized manufacturers. If special requirements exist which cannot be satisfied by commercially available units, these manufacturers can usually modify standard equipment to provide acceptable performance. If the different modules have not been especially designed to be used together, interface problems may occur even though the specifications seem to indicate that the output characteristics of one unit are matched to the input of the other unit. This is mainly because specifications are never complete in all respects. A test system must be designed to be modular as far as possible such that changing an input module does not affect system control and application programs. Sometimes characteristics not mentioned in the specifications can be the cause of interface problems. Usually these problems have something to do with radiated or conducted noise, grounding, and shielding.

Ample time should be allowed for matching the different modules, transducers, etc., followed by adequate testing. This is especially the case with components obtained from different manufacturers, or if special equipment has been built in-house.

Early in the design stage, a decision must be made regarding the packaging of electronics constructed in-house. There is no need to dwell upon the advantages of standardization in this respect. In small aircraft, however, it may be difficult to adhere to existing standards for equipment boxes and racks. Often ad-hoc solutions will have to be found to mount boxes in small corners. In combat aircraft, the sophistication of which is continuously increasing, it is increasingly difficult to solve the compromise between equipment performance and equipment size even if the dimensions of components are continuously decreasing.

In systems involving more than one recorder time synchronization between the different recording systems is very important. It is desirable to utilize the same time base and format if at all possible, to simplify data correlation. If this is not possible, as in some non-automatic systems, it becomes necessary to provide additional event marks on all systems, which can be used for time correlations between the individual time bases of the recorders. When airborne and ground based systems are used simultaneously time correlation may require the use of a radio link, unless the required accuracies are low. On the other hand the application of atomic frequency standards exempts the transmission of a continuous timing signal.

9.3.4.2 Integration into the aircraft

Some factors influencing system design relating to the integration into the aircraft are:

- Accessibility
- Weight and size of boxes and wiring
- Unwanted interaction between instrumentation systems and the aircraft

Accessibility of the instrumentation equipment is an obvious requirement for maintenance. It is sometimes unavoidable that sensors and cabling are mounted in places which will not be accessible later. They are for instance mounted during assembly of the (prototype) aircraft or during a major overhaul. This must be avoided as much as possible because considerable time and effort will have to be spent, should they become unserviceable. It is useful to provide very simple display systems enabling types of failure to be identified in the event of malfunction like shorted sensor, sensor circuit open, etc., thereby simplifying disassembly.

Weight and size of boxes and wiring can constitute a problem in many aircraft especially in small fighter aircraft. Sometimes it is possible to install instrumentation equipment in locations normally occupied by standard aircraft equipment if this is not essential for the specific flight test. For instance, if armament and ammunition boxes can be removed, much space can become available. Another solution similar to that presented in paragraph 9.3.2.4 consists in using a system divided into several functional units, thereby distributing tasks and improving volume-to-performance ratios. If no space is available inside the aircraft, or if the equipment must be easily exchangeable between aircraft of the same type, the instrumentation system can be installed in an externally mounted pod. In large aircraft a considerable amount of cabling is required to connect all transducers to the instrumentation equipment. Apart from the weight of the cabling, which can become excessive, long signal wires tend to decrease system accuracy. Remote signal conditioning and multiplexing, which has been treated in Section 9.3.2, can provide an improvement in both respects.

Unwanted interaction between instrumentation and aircraft systems and vice versa can be caused by faults in the electrical circuits or by electrical noise.

The system must be designed so that *faults* originating in the instrumentation equipment cannot degrade aircraft systems performance. This is especially important, if basic aircraft equipment is tapped to pick off information for the flight tests. In particular, it is necessary to pay attention to the input impedances of monitoring circuits to ensure they do not affect an aircraft system whether they are operating or not. A test installation is often provided with a separate power supply and switching off the latter must not result in significant load changes on aircraft circuits.

Electrical noise can be defined as the unintentional and unwanted influence which one electrical circuit can have on another by means of radiation or conduction. The instrumentation system should be designed so that it will not cause interference by radiation or conduction. On the other hand, it should not be susceptible to such interference emanating from the aircraft and its systems. Several civil and military documents give guidance and state requirements regarding this matter (Refs. 9.5 to 9.11).

Radiation can have a predominantly magnetic or electrical character. A conductor carrying a large current will mainly produce a magnetic field; a conductor with a high voltage will mainly produce an electrical field. In general, it can be said that the higher the frequency, the more problems can be expected from radiation. The effect of radiation can be minimized by:

- Shielding
- Proper grounding and bonding techniques
- Increasing the distance between conflicting circuits and lines
- Twisting wire pairs or using coax cables
- Avoiding the use of unnecessarily high frequencies and very sharp pulses
- Avoiding leaks in radio-frequency transmission lines
- Limiting the bandwidth of the instrumentation system as much as possible
- Using differential amplifiers to minimize common mode noise
- Using fiber-optic connections for sensitive data buses

The routing of wires through an aircraft should be carefully planned to separate as much as possible the susceptible circuits from the circuits which cause interference. In principle three categories of wiring can be distinguished:

- Wiring that may cause interference, for instance: power wiring, transmitting antenna cables, wiring for the operation of inductive devices, wiring carrying pulsed energy
- Wiring that is susceptible to interference, for instance: amplifier inputs, low-level high-impedance circuits, receiving antenna cables
- The category in between, which is neither causing serious interference nor very susceptible to interference, for instance: low-impedance wiring, low-energy wiring, low-voltage power, and lighting circuits (except fluorescent lighting)

Wires belonging to different categories should be kept apart as much as possible, unless it has been established that no interference occurs (Ref. 9.12).

Conduction of electrical noise mainly takes place through power leads. It can be minimized using filters, voltage stabilizers, dc-to-dc converters or rotating inverters. The application of static inverters especially for the generation of line voltages is problematic. In extreme cases it may be necessary to use separate batteries. Some more details are given in Sections 9.3.5 and 9.3.6.

9.3.5 Grounding

Ideally, "ground" in an electrical or electronic system is a conductor with zero impedance throughout, which is used for all return currents. In practice, however, small impedances exist in all ground conductors. If several circuits, which are otherwise independent, share a common ground conductor, the current of each circuit contributes to a voltage across that conductor. It is clear that the current from each circuit will affect the currents in other circuits. It is therefore advisable to separate power currents from signal currents whenever possible.

Inside the instrumentation boxes this leads to the use to three distinct types of ground, i.e., power ground (dc and ac possibly separated), chassis ground, and signal ground.

Power ground is used for all return currents from power supplies and loads such as relays, heaters, motors, etc. The power ground must be brought out of the box on a separate connector pin, which must be tied to the aircraft structure with a low impedance lead or to a distinct ground point at the aircraft structure.

Chassis ground or case ground is safety ground which connects the metal structure of the equipment to the aircraft structure to protect personnel against electrical shock hazards in the event of a short circuit between a high voltage and the equipment structure. The chassis ground must also be brought out of the equipment on a separate connector pin which must be tied to the aircraft structure by a low impedance lead. If properly designed for that purpose, the cases can also provide radio-frequency shielding. The chassis ground connection must then have a low RF-impedance.

The *signal ground* is a high-quality ground. No return currents from power supplies are allowed through a signal ground, only small signal return currents. In more complex instrumentation systems it is advisable to specify galvanic isolation between the signal ground and the power ground inside the boxes. The power supply unit of the instrumentation equipment must then contain a transformer in which the secondary winding is isolated from the primary. This is normally the case when the instrumentation equipment receives its power from the ac supply of the aircraft. If the instrumentation system receives its power from 28-V dc supply of the aircraft, a dc-to-dc converter which contains such a transformer can provide galvanic isolation between power and signal ground. The signal ground is also brought out of the equipment on a separate connector pin.

All aircraft electrical power systems use the aircraft structure as a return. This implies that each point of the structure has a different potential, which is not only dependent on currents but also on the resistance of a large number of mechanical joints, which, in spite of electrical bonding straps, have unpredictable and varying electrical characteristics. The potential difference between two points on the structure may consist of a dc component, a 400-Hz component, switching transient spikes, radio-frequency noise, etc., up to a total

rms-value of several volts. It is clear that error voltages of this nature cannot be allowed to enter a signal path. This can be avoided by connecting all signal grounds of the instrumentation system with each other and connecting this common signal ground to the aircraft structure at one point only.

In practice this cannot always be realized. In some transducers and usually all antennas, RF transmitters, and receivers the signal ground is connected to the case, and the instrumentation system may have to be connected to operational circuits which are grounded elsewhere. Then ground loops occur, which can cause large errors in the signal voltages. This can be avoided by using differential amplifiers (see Chapter 6), where a voltage difference between the input and output signal grounds is rejected as a common mode voltage.

Even if all signal grounds are interconnected and grounded at one point, common mode voltages can occur due to capacitive coupling with the aircraft systems. This can be reduced by shielded and/or twisted wire pairs with properly grounded shields and by using differential amplifiers.

9.3.6 Electrical power

Whenever possible the 28-V dc power supply of the aircraft should not be used for instrumentation systems except for the least sensitive devices, such as heaters, motors, etc. This avoids a lot of trouble as the 28-V dc supply is a notorious source of interference. Reference 9.9 gives a characteristic of its properties. Electric equipment that must be powered from this source should include very adequate voltage stabilization and filtering circuitry. Most aircraft have a three-phase, 115/200-V, 400-Hz ac supply which can be used for instrumentation equipment; 28-V dc instrumentation equipment should be powered from the ac supply via a separate transformer-rectifier unit only used for the instrumentation equipment.

Airborne computers and microprocessors incorporated in the instrumentation system require precautions to protect the memory during power interruptions or transients. Interruptions of about 50 msec in the ac power supply are quite common during bus transfer in electrical systems. Battery buffering will normally be provided for essential dc buses.

In electrical ac power systems with more than one generator and one bus, two versions are possible:

- The generators have been coupled electrically (voltage, frequency, and phase) and are feeding all buses in parallel.
- Each generator is feeding its own bus and is running independently of the others with its own voltage, frequency, and phase.

All these considerations will affect the instrumentation system design. In general, it is best to feed the system from one bus. The system designer should be aware of the possibility of a beat frequency if the generators are not coupled. Furthermore, he should take care that in the case of ac ratio signals the reference voltage is taken from the same phase from the same bus. This also applies to synchro and servo circuits.

In large systems there are usually subsystems with more or less important functions. It is then advisable to install an emergency power bus with backup-power supply driving only very important equipment like tape recorders and telemetry transmitters.

It is almost needless to say that the available power source must have adequate capacity to carry all possible simultaneous loads.

9.3.7 Data analysis requirements of the instrumentation engineer

During design, realization, and operational stages, close cooperation among flight test engineers, instrumentation engineers, and data processing specialists is necessary. Primary topics of discussion should include:

- Routines for data processing
- Project definition in terms of number and schedule of flights
- Amount of data and required turnaround time per flight
- Definition of flight data formats

- Data presentation requirements
- Data routines for instrumentation checking

The data processing equipment must be compatible with the requirements of the instrumentation engineers concerning quick look and instrumentation checking (see also Chapter 12).

Typical requirements of a large instrumentation system are:

- Quick-look facilities for postflight instrumentation check which can produce graphs or tables
- Facilities for the printout of selected digital values in the code in which they were recorded (binary, octal, binary-coded decimal or hexadecimal) as an aid in error detection
- Capability to observe the signals coming from the read amplifiers of the flight tape playback unit for troubleshooting of the airborne recorders
- Immediate access to the preprocessing facility in case of a failure in any part of the instrumentation equipment
- Software for instrumentation checking (comparison of in-flight calibration values with the known reference values, counting incorrect parities and other irregularities in the recorded codes, etc.) and for maintenance and development tests such as described in Sections 9.4.1 and 9.4.2 — access to computer stored calibration files.

9.4 THE TESTING OF INSTRUMENTATION SYSTEMS

9.4.1 Environmental testing

At various intermediate stages during the development and construction of an instrumentation system it is necessary to check the hardware produced so far for proper functioning under the anticipated environmental conditions. General information about the environmental conditions at different locations in aircraft is given in literature (e.g., Ref. 9.5). The actual conditions must, however, be checked for each specific aircraft. In case of unusual applications or locations of the instruments, for instance, if they are mounted in a pylon tank of a military aircraft, the environmental parameters will have to be decided at the earliest possible moment. Procedures and equipment for environmental tests are described in References 9.5 to 9.11.

The errors which the environmental conditions can be allowed to produce must be determined from the overall accuracy requirements. The environmental conditions can also cause effects which are not directly related to accuracy. Extreme temperatures or vibration can make the operation of certain components so marginal that failures will occur too often.

The objective of environmental testing is to obtain a high degree of confidence in the capability of the equipment to operate within its specified limits in the actual aircraft environment during its entire service life (MIL-STD-810, Ref. 9.6).

Depending on the application and location of the equipment in the aircraft a choice of the following tests or combination of tests should be considered (some relevant topics are mentioned between parentheses):

- Altitude (maximum, rapid decompression)
- Temperature (low, high, shock, cycling)
- Vibration (resonance search, resonance dwell, vibration cycling, fatigue)
- Acceleration (linear and angular, frequency range, amplitude)
- Shock
- Humidity (condensation, corrosion, leakage paths)
- Explosive atmosphere
- Rain
- Power input (voltage variations, transients, frequency variations, harmonic distortion)

- Radio frequency susceptibility (radiated and conducted)
- Hydraulic fluids
- Sand and dust
- Fungus resistance
- Salt spray
- Acoustic noise

9.4.2 Functional testing

The realization phase is characterized by a continuous flow of small functional tests and resulting debugging. The electronic engineers will test the detail circuits they designed. The instrumentation engineers will test the modules and major components as they come in from the manufacturers or from their own workshops.

Printed circuit boards are brought together in boxes. Boxes are connected together and to transducers, recorders, transmitters, cameras, etc. Each time a new part is added a functional test should be executed, for, no matter how meticulous the preparations of the specification and fabrications have been, problems are liable to occur. They may arise from inadequate noise suppression, missing ground-wires, capacitive or electromagnetic coupling, self-heating effects, mechanical or electrical tolerances, spurious signals, transients induced in power lines, misinterpretation of specifications, plain mistakes, negligence or poor workmanship.

Integration of a number of measuring channels into a system implies that one channel is physically brought into proximity with others, which may result in electrical interactions. Signals fed to the same multiplexer may interact (cross talk) due to defects or a non-ideal insulation resistance. Residual charges in sample and hold circuits or signal conditioning amplifiers may affect the next measurements.

To check interchannel cross-talk the subsequent procedure can be followed:

Each data channel is provided with a constant input signal, the value of which can be varied. The electrical properties of the signal sources should preferably be identical to the electrical properties of the transducers. The magnetic tape recorder is then switched on, and the constant signals of all channels are recorded. Then the input signals are varied, one at a time. The resulting tape can be processed using a special program. For each channel all values which are beyond a predetermined limit from the intended value should be displayed.

Another functional test is the determination of system accuracy. The static calibration of the data channels must be verified repeatedly over a longer period of time and under various environmental conditions, especially temperature and vibration. A considerable improvement of accuracy is sometimes possible by the implementation of reference channels which control automatic calibration systems.

It has often been found that a system which performed well under all kinds of tests in the laboratory failed when used under actual flight conditions. There can be technical reasons for this, which are often difficult to predict, but an important factor can be the human element. In the laboratory the equipment is usually operated by engineers closely associated with the development. When it is installed in an aircraft it will be operated by the people involved in the flight test operations. Experience has shown that it is necessary to test as great a part as possible of the equipment in flight before the complete system is finally installed. These flight tests need not be done in the aircraft in which the instrumentation system is to be used. Apart from the technical checks on the equipment, such flight tests provide a very good opportunity for training the people who will have to operate it. It is desirable to make a flight test with the total instrumentation system after its final installation. This may, however, not always be possible, e.g., with prototype aircraft.

9.4.3 Total system check-out in the aircraft

When environmental and functional tests have given sufficient confidence in the system, the complete system is installed and a total system check-out is made. That will provide the basis for a final judgment of the functioning of the total system. It is the last phase before the system is used in the flight test program.

The first step is to check the stability and accuracy of all outputs. Stability checks can be done by recording the data under several conditions and to process them as described for the cross-talk tests in Section 9.4.2. Any instability should be traced and remedied. Accuracy of the channels which have already been calibrated in the laboratory can be checked by overall calibration checks at one or more points of the measuring range of each input parameter. This is a very important check, and the input stimuli used should be as accurate as possible. Small, but significant, errors may otherwise remain undetected. Such errors can be caused, for instance, by wrong grounding connections, errors due to wrong matching of components or errors in the combination of component calibrations. In this phase also those calibrations must be performed which can only be done in the aircraft, such as control surface deflection measurements.

A second important step is the investigation of the *interactions between the instrumentation system and the aircraft systems.* The effect of noise in the flight test equipment produced by the aircraft systems can be detected by the method described in Section 9.4.2, but now all instrumentation input signals are kept constant and the aircraft systems are operated. Recordings can be made when the engines are running and when radio and other aircraft equipment are switched on. Influence of the flight test instrumentation equipment on aircraft systems can be detected by visual and aural monitoring the standard aircraft instrumentation and communication/navigation equipment while operating the flight test instrumentation equipment, as, for example, switching cameras, recorders, telemetry transmitters, blowers, heaters, power supplies, and disconnecting and connecting the data acquisition and processing units.

Once the equipment has been pronounced ready, it is almost guaranteed that somebody will initiate a request for a change to the measurements list. The danger here is that too little concern will be given to the effect this might have on the system performance. Small last minute changes are frequently made without proper checking for interactions and interference. The possibility exists that the qualification tests will be invalidated, and this will perhaps not be noticed until the first flight. Actually, appropriate tests should follow each alteration.

9.4.4 Preflight and postflight checks

If the instrumentation equipment successfully passes the final total system check out, the equipment enters its operational stage. From now on it will be in the hands of the engineers who operate and maintain it. An important part of their work is to prepare the equipment for each flight. An almost mandatory requirement is the use of a preflight checklist for all projects, whether big or small. An aborted flight caused by the fact that some small preflight item was overlooked can in no way be justified.

The preflight check should start with the following items: tie down of equipment, all connectors in place, mechanical condition of transducers, boxes, cameras, recorders, cabling, tubing, and other equipment, check of BITE output, etc. Then the cameras and recorders must be reloaded. Each channel output should be checked for proper indication with all inputs in a known condition. This can either be done manually using the onboard displays or by making a test recording (possibly by means of telemetry) which can be analyzed in the data processing station. The preflight check should then be continued with a short functional test of the whole system. Finally, all switches and other controls must be put in the correct position.

A postflight check is advisable to ensure that the system has performed all over the flight and is still functioning properly.

If the results of the flight test become available well before the next flight a postflight check may not be necessary.

After a flight, both the flight test engineer and the instrumentation engineer want to know, as soon as possible, the results of the flight test. For the instrumentation engineer no test can replace the output from the preprocessing phase as this will contain the ultimate evidence of proper functioning or failure.

9.5 REFERENCES

9.1 U.S. Army, "IRIG Standard 106-86, Telemetry Standards," Secretariat, Range Commanders Council, US Army White Sands Missile Range, New Mexico 88002, May 1986, Rev. Sept. 1988.

9.2 Digital Systems, "Daniel 90 System, Electronique Serge Dassault," 92214 St-Cloud Cedex, France, 1987.

9.3 U.S. Department of Defense, MIL-STD-1553B, "Digital Time Division Command/Response Multiplex Data Bus," Sept. 8, 1986.

9.4 Airlines Electronic Engineering Committee, "Mark 33 Digital Information Transfer System (DITS), ARINC Specification 429-9," Sept. 30, 1985.

9.5 U.S. Department of Defense, "Environmental Conditions and Test Procedures for Airborne Electronic/Electrical Equipment and Instruments," RTCA Document DO-138. (Note: This document has been superseded by RTCA-DO-160.)

9.6 U.S. Department of Defense, "Environmental Test Methods and Engineering Guidelines," MIL-STD-810E, July 14, 1989.

9.7 U.S. Department of Defense, "Electronic Equipment, Aerospace, General Specification for," MIL-E-5400T, Aug. 14, 1992.

9.8 U.S. Department of Defense, "Environmental Testing, Aeronautical and Associated Equipment, General Specification for," MIL-E-5272B. (Note: This document has been superseded by MIL-STD-810.)

9.9 U.S. Department of Defense, "Aircraft Electric Power Characteristics," MIL-STD-704E, May 1, 1991.

9.10 "Guidance for Aircraft Electrical Power Utilization and Transient Protection," ARINC Report No. 413.

9.11 U.S. Department of Defense, "Electromagnetic Emission and Susceptibility Requirements for the Control of Electromagnetic Interferences," MIL-STD-461C, Aug. 4, 1986.

9.12 Borek, R.W., "Practical Aspects of Instrumentation System Installation," AGARDograph No. 160, Vol. 13, Paris, France, 1981.

Chapter 10A

DATA PROCESSING

by

R. Pozmantier
Ridley Mission Control Building
Air Force Flight Test Center
Edwards AFB, CA 93523
United States

10.1 INTRODUCTION

The scope of data processing in flight testing has continued to expand in conjunction with advances in airborne and ground data acquisition systems (DAS) and with processing systems that are continually advancing and evolving. The traditional division of data acquisition in the air (or on the test range) and data processing at a fixed location is no longer the "norm." Digital computers which were once large, relatively limited in processing power, and very costly, have now advanced to the point that they can be used anywhere airborne DAS are located. The process of computer data "processing" now occurs onboard single-seat fighter aircraft, in addition to the large multi-engine aircraft of the past. Data processing has proliferated into the smallest portions of some instrumentation systems (signal conditioning, digital filtering, onboard data scaling, time tagging, and data compression). Range sensors now preprocess their outputs or provide analyses-quality data by using dedicated computers as their central control.

Tasks which were predominantly manual, (for example, selection of DAS channel assignments and formats, calibration of sensors on and off the aircraft, and preflight instrumentation checks) are more often handled with computers as are the transfer of selected data to data processing centers.

With the proliferation of data processing and the attendant increase in complexity and scope of work, it is imperative that engineering managers give most of these multiple areas as much as or more attention than the design of the system themselves. Since it becomes more difficult to observe individual processes when they are done with a computer (rather than manually or within discrete hardware), checking for validity of information products from these various systems must also be considered. Self testing and checkout procedures/validation procedures are essential and must be built into the affected system.

New disciplines of project mathematician (programmer), data engineer/data production, and real-time data engineer are added to the traditional flight test engineer/instrumentation engineer team. Good coordination and recognition of the interdependence of each team member is imperative if a successful flight test program is to be conducted in a timely manner.

The scope of data processing is too large to be covered in detail even in a full text devoted to this topic. It is the intent of this chapter to identify major aspects of data processing with the goal that they will act as a focus to flight test and instrumentation engineers to make data processing concerns an integral part of their requirements definition and design efforts.

10.2 GENERAL

10.2.1 Types of data input

A flight test data center receives several types of data:

- data measured and recorded in the aircraft or from ground-based range sensors,
- information from the flight test engineer on the required amount and kind of data to be processed (real time/post flight), and
- information from the instrumentation department on the configuration of the recording system and on the calibrations which have to be applied to each parameter.

The recorded data can be of many types. The most important are:

- analog magnetic tapes which may carry continuous or sampled data, using one or more modulation techniques such as pulse code modulation (PCM), frequency modulation (FM), pulse amplitude modulation

(PAM), or pulse duration modulation (PDM). The PCM tapes may be magnetic tapes with parallel or serial recordings in several different codes,

- "predetection" recorded telemetry data (that is, still modulated on a carrier frequency or at least before separation of the subcarriers),
- data from ground-based installations such as cinetheodolites, radars including real-time telemetry and range-time space positioning information,
- computer-compatible media such as disks, 7- and 9-track tapes, memory (bubble, magnetic, EEPROM, etc.),
- photo-panel data (manually processed and not in general use), and
- continuous-trace recordings (usually manually processed).

These data formats must be defined well before the start of the flight test, so that the processing, software, and equipment can be developed or configured. The information used to compile the required database includes the code or modulation method, the number of channels, data formats, calibration data, etc. The most automated the handling of the database, the easier it is to alter these parameters and the closer to flight test one can finalize inputs. Note that some software development or new hardware acquisitions can take over two years and that the definition of a schedule for when each type of information must be received is part of the data processing planning.

The information from the flight test engineer must indicate:

- which parameters have to be processed and what operations have to be done on these parameters (both real time and post flight) and
- which parts of the recorded data have to be processed.

The first is usually coordinated with the data processing center some time before the flight, on a flight-by-flight basis, so that the data processing personnel can make preparations to begin data processing as soon as the flight test begins. As the decision on the type of flight test to be executed may depend on considerations such as weather conditions and status of the airframe, this information cannot be finalized at a very early stage. The data processing software and the storage of the data such as calibrations must therefore be designed in such a way that the program and calibrations required for each type of test can be made available quickly.

The decisions on which portions of the recorded data are to be processed can only be made after the flight has been completed. It will include conclusions drawn by the pilots and by observers (who were onboard during the flight) from on-line telemetered data, and often from observed quick-look data runs on preprocessing computers.

The information from the instrumentation department should include the following items:

- the data formats of the DAS for which each parameter can be found: tape track assignments, etc., and
- the calibrations of each parameter (measurand).

Often a portion of this information becomes available only after the aircraft has taken off, because of last minute changes during instrumentation checkout just before the flight. In many cases in-flight changes may be made in the instrumentation. The calibration data may be given in two ways:

1. (a) A listing of the components used in measuring each parameter,

   (b) The calibration data for each component,

2. As an aggregate calibration for the parameter (end-to-end).

For some real-time applications, changes in calibration data may not have to be incorporated unless they significantly affect the data value. As a late delivery of the calibration data can have a strong influence on the turnaround time of the real-time processing and post flight processing, a rather sophisticated administration system is required.

With large test projects that include multiple users (contractors, subcontractors, government), it is imperative to plan data processing systematically. Hopefully a feasible set of requirements can be developed several months before start of testing so that validation of processing capabilities can be made. Provisions for updates of selected data should be part of the implementation.

10.2.2 Functional analysis of data processing

Previous standard data processing systems can be broken down into three operational areas and two support areas.

Operational areas are:

1. preprocessing, the task of reading the data from its media and writing it onto computer-compatible media,
2. computation, (usually in many "generations") the task of reducing data to useful values, and,
3. data presentation, the task of reformatting that data and outputting it in a useful form (listings, plots, etc.) on various media (CRT, paper, or microfiche).

Support areas:

1. instrumentation checkout,
2. database creation/maintenance

These divisions are useful as a conceptual view of the sequence of events which occur in data processing. Many types of systems now accomplish all of the above operations. A more current data processing functional task list could be broadened to include the following:

database
instrumentation programming/setup,
instrumentation checkout - checkout data presentation,
real-time processing (onboard/ground),
quick look,
post flight data processing,
post flight data presentation

Note that these task areas are not tied to hardware or systems configuration and may be performed by the same systems or many different systems.

10.2.3 Quick-look and instrumentation checking

These two operations must be completed as quickly as possible after the flight, before the main data processing is started. They have many requirements in common and are sometimes regarded as a single operation even though they are needed by different people. The quick-look data provide the flight test engineer with the information needed to determine whether the test objectives have been met and what parts of the flight data are most suitable for final processing. The engineer uses this information to decide on the final data processing instructions for the data from the flight which has just ended and to plan the next flight. The instrumentation check data are used by the instrumentation engineer to identify any failures or deteriorations in the data collection system which must be repaired before the next flight can start. Many engineers accomplish quick-look analysis during real-time presentation of the telemetered data in a ground-based control room, or using data products produced during real-time monitoring onboard the aircraft.

The quick-look information can usually be obtained from the analysis of selected parameters. it can be obtained on-line or off-line. Interactive data terminals which allow extensive manipulation of the data by the engineer are beneficial to both online and off-line techniques.

Online quick-look information can be obtained from onboard observers who follow the time history of the essential parameters on instrument panels, continuous-trace recorders, digital displays on CRTs, or airborne printer/plotters, and telemetry of the essential parameters to the ground, where they can be displayed in real time in a control room.

If the essential parameters have to be calculated from the measured data, additional computation can be done either by an onboard computer or on the ground prior to being displayed. With today's aircraft carrying

significantly more instrumentation and doing concurrent, multidisciplinary testing, the use of real-time processing and display is the norm. Essential real-time information can also be obtained from reports by the pilot, real-time video telemetry, or processing of range sensor data.

Off-line quick-look information is obtained from a preliminary post flight analysis of the essential parameters recorded during the flight. This is relatively easy to do from strip chart recordings. Quick-look analysis from magnetic recordings requires more sophisticated equipment and more planning to decide which "time slices" need review.

Quick-look data can also be used for checking the functioning of the instrumentation; a failure or partial failure will become immediately apparent from the analysis. If all data are recorded on continuous-trace recorders, the instrumentation check and the quick-look information can usually be obtained simultaneously when the flight test engineer (who knows how the aircraft should have flown) and the instrumentation engineer (who knows how the instruments should react) examine the recordings together. For multiparameter systems recording on magnetic tape, failures in channels are difficult to find without an exhaustive review. Aircraft or data center post flight, checkout using automated programs for limit checking, and testing measurement reasonableness are making this task much easier. It is also not uncommon for instrumentation engineers to have their own control room console with displays to access instrumentation health before a particular test point is flown. The instrumentation engineers may require more detailed information than the flight test engineers.

10.2.4 Preprocessing

The division of data processing, or at least of automatic data processing, is in two parts: preprocessing and computation are generally accepted. There is, however, less agreement on the division of the different processes between these two parts. This is mainly because the division is usually made from the hardware point of view. The data collection subsystem of an automatic flight test instrumentation system usually provides the data on magnetic tape in analog form or in digital format which cannot be fed directly into a computer. The data processing equipment then usually consists of two parts: the preprocessing equipment which has as its output a computer-compatible data format, and a general purpose computer. The division of the different data processing tasks between these two systems depends on many considerations such as speed and memory, capacity of each of the two systems, and availability of the general purpose digital installations. In this chapter the division is made from a more functional point of view: "preprocessing will include all installations and processing operations which are applied to each parameter individually in the same sequence as the information was acquired; "computation" will be used for operations which involve the combination of information from more than one parameter and for operations on one channel which does not follow the original time sequence (such as frequency analysis and statistical operations). In general, this division conforms with the functions of the preprocessing and computation hardware systems (though more and more preprocessors are being introduced with significant computational capabilities).

In nonautomatic data processing the processing functions are roughly similar to those in automatic processing, though differences occur because the operations are performed by human operators. Sometimes transitions between nonautomatic and automatic processing occur in the automatic systems, when complex processing requires determination of reasonableness of results at intermediate stages.

The main preprocessing functions are:

copying of the original data recordings,
selection of the parts that must be processed,
analog-to-digital conversion, if required (FM, PAM, etc.),
elimination of errors,
filtering and smoothing,
reduction of the sampling rate, data compression,
applications of calibrations,
time correlation between data sources and individual parameters, and
conversion to computer-compatible media

These functions will be briefly characterized in the following material (in Section 10.3 a few of these functions will be discussed in more detail). It must be stressed here that these functions are not always executed in the sequence given above and that, as stated before, they are not always executed by the preprocessing equipment. Filtering and smoothing, and the application of calibrations, for instance, are often part of the processing in a

general purpose computer, but as they functionally belong to the preprocessing as defined above, they will be mentioned here.

The first preprocessing operation may be the copying of the original data recordings. It is extremely important to ensure that the valuable information can under no circumstances be destroyed or lost. Magnetic tapes are often copied immediately after they enter the data processing center and the original tapes are stored in archives. All further operations are then done with the copy.

It is usually not necessary to process all data that have been recorded. An important part of the preprocessing is, therefore, the selection of the parts that must be processed. This selection can be made during the quick-look processing. For both purposes it is necessary to examine all channels on which the main parameters for the test have been recorded. If the preprocessing system is capable of processing all data in an efficient manner, there is an advantage in preprocessing all the data to a computer-compatible disk format so that is can be easily processed further (quick look, analysis) without having to read the analog source tape.

Analog recordings will either be demultiplexed and displayed on strip charts or will be converted to digital form. For the analog-to-digital conversion of analog recordings on magnetic tape, most preprocessors have standard peripheral equipment, which usually will require a special interface unit for demodulation of the signal. Analog recordings from continuous-trace recorders and photo-panel recorders are rarely used and are processed manually.

The operations which now follow must be applied to each channel individually. They are intended to convert the data into such a form that they can be more easily processed. The first step must be to edit errors. If errors are left in, serious difficulties in the final interpretation can occur, especially since the influence of these errors is obscured in the final results. Several types of errors can occur. Some can be due to failures in the DAS acquisition. Others can be errors of significant bits in a digital word. They can be detected by putting limits on the jumps that can be allowed to occur between successive measurements of the same parameter. This process if often combined with smoothing (the elimination of random errors in the individual measurements). Computer smoothing is an intensive process which must be tailored to the *a priori* statistics of the specific parameters to be smoothed. It is very important that the errors are removed before the actual smoothing process is executed; a single outlying blunder can cause large errors in the final smoothed curve. Though some filtering is done in the data collection system, at least in sampled systems, it may be necessary to do some additional filtering in the ground station. Filtering also plays an important part in the interpolation and reconstruction of sampled data. In some cases channels have been over sampled. For those channels a reduction of the sampling rate can be made to reduce the work to be done. This reduction of the sampling rate should be done after all smoothing and filtering operations have been finished.

10.2.5 Data compression

In general, data compression was initially used to remove redundancy from data in a manner that retained all pertinent information needed to reconstruct a time history of the data.

Examples of this type of compression would be a zero-order-prediction algorithm which defines a "window" of some number of bits changed in a digital data word (e.g., PCM). If the last sample value transmitted compared to the current sample value is less than the window, that sample is not used (i.e., don't transmit, don't write to tape). Other criteria have been used, such as define min/max values and use samples only within window (gives data only when one exceeds predefined limits). Many compression techniques and algorithms are available in modern preprocessor systems. It is sometimes necessary to chain (cascade) compression methods to achieve the desired results. As with "smoothing," one must be aware of the effects of the order in which compression is done. Also, the entire downstream portion (after compression) of the data processing system must be designed to read the compressed data and restore the samples, if necessary. Data compression yields more efficient storage of data, but requires overhead data for time tagging so that it can be event correlated.

The most important operation on each individual parameter is the application of the calibrations, which converts the data to engineering units (EU). See Chapters 8 and 10B.

If the time difference between events in different parameters must be exactly known, time correlation may be necessary. The relative timing of the value in two channels may be shifted in the recordings because:

- different lags or phase shifts occurred in the measuring channels of the two parameters,

- the two parameters were sampled at different times,
- the two channels were recorded on different recorders, these may have had different time bases, and
- different sources of data (airborne, ground) had different time bases.

The final operation in preprocessing usually is the conversion to a computer-compatible medium which can be read by a general-purpose computer. As the data at this stage are usually already digitized, only a digital format conversion is required which can include one or more of the following operations:

- conversion from serial to parallel (or the reverse),
- change of the number of tracks of a parallel recording,
- digital code conversion (e.g., bi-phase/NRZL),
- arranging the data in standard-length blocks, separated by inter-record gaps (magnetic tape), and
- formatting of a disk.

As already stated, the preprocessing functions previously mentioned do not always coincide with the actual operations done in preprocessing equipment: in many data processing stations some of the preprocessing functions (such as digital filtering and applications of calibrations) are done in the general-purpose computer, but it is also possible that some of the simpler computation functions (such as the calculation of Mach number from static and total pressure) are done in a preprocessing computer. The conversion to computer-compatible media, though functionally the last step in preprocessing, is sometimes done at the very beginning to facilitate the other operations that have to be performed by the preprocessing computer. The hardware considerations of the preprocessing station are discussed in more detail in Section 10.3.

10.2.6 Post processing

The computation functions in post processing are aimed at transforming the corrected time histories supplied by the preprocessing into quantities which are more readily adapted to interpretation. They may involve simple operations such as the determination of a minimum value of a certain parameter or a very complicated operation such as the determination of stability derivatives from simultaneous partial differential equations, or the statistical analysis or frequency analysis of a number of parameters.

Often computation is not necessary at all: if all required information can be read directly from the time history, post processing does not go beyond the preprocessing stage. Computation can be done by hand or by computing devices. Computation by hand is still a universal method because the computation can be adopted to the interpretation which goes on simultaneously. Such things as the determination of the maximum value of a signal, or the analysis of a pulse waveform in an electronic device, are easily done manually. Automatic methods are used if the quantity of data is very large, or if too much calculation is involved.

Analog computers once were useful in online computation processing because they often were faster than their digital counterparts. They also had advantages in some computations involving models, and in some fields of computation such as frequency analysis. For some tasks hybrid computation systems, involving both analog and digital computers connected by analog-to-digital and digital-to-analog converters are still used. The digital computer in use today will do 99% of the computing required.

The computation stage requires careful planning. A computer can easily produce a large quantity of numbers which will require enormous manual labor when they have to be interpreted, as well as producing data which will never be rad. The planning should be done in three stages:

- the computations should be carefully prepared to ensure that the objectives of the flight tests can be derived from the results,
- the quantities which must be presented for interpretation and their form of presentation should be selected. Too much information will hamper the interpretation; however, overlooking a single parameter may result in a costly rerun on the computer, and
- the method by which the quantities will be calculated should then be chosen in accordance with the characteristics and the capacity of the available computer. If this method and the corresponding computer

programs have not been carefully planned, the required memory space and calculation time can become too large.

The planning should be done at an early stage, as it may cause additional requirements for the parameters to be measured and for the preprocessing work to be done before the data are entered into the processing computer. Ample time must be allowed for the actual programming and for the testing of the programs. If possible the programs should be tested using suitable simulated inputs. During the actual programming, close contact between the programmer and the flight-test engineer should be maintained. Even though many facilities use general purpose programs for computation, they usually require reconfiguration and tailoring for the specific flight testing. Thus, one should approach the use of existing software in the same manner as new programming, with appropriate planning.

10.2.7 Presentation

The presentation of the results of the computations can be in tables or on graphs. Tables are the easiest format for the flight-test engineer. They can be produced by standard peripheral units. With line printers, moderate output speeds can be obtained; for example, 2000 lines per minute, each line consisting of 132 characters. An advantage of using a table is that the full accuracy of the results can be retained. From the point of view of the engineer who has to do the interpretation, graphs are often easier to use. The automatic plotters which were previously used with digital computers were slower than line printers, and required careful planning of the scale values if sufficient accuracy was to be retained. Electrostatic mosaic printer/plotters, which are in general use now, are much faster. They require digital inputs and can be accurate to 0.1% or better and can also print characters. Laser printers and other advanced printers now offer the production of tables and graphs with equal speed (70 pages per minute).

Presentation of tabular data on microfiche as a direct computer output (no paper product) makes handling and storage of tabular data much easier. Another interesting method of presentation is provided by interactive computer graphic display systems. The observer can operate the computer or terminal; the results of these operations are immediately displayed. The computer results can thus be modified before the final graph or table is produced. The introduction of capable personal computers and engineering workstations have made this technique even more attractive as data can be manipulated off-line from the mainframe computer in some cases. The layout of the tables and figures should be programmed in such a way that they can be directly published in test reports.

10.2.8 Validation and interpretation

The task of the data processing department is not completed when the computer has produced an impressive amount of data files, tables, and graphs. Before delivering these to the flight-test engineers, the data processing department should check all output data for errors and should determine whether the requested accuracy has been achieved. This process of validation of applied computer operation is, however, often neglected. If this occurs, then this work has to be done by the flight-test engineers who are often less well prepared for understanding what could have gone wrong in computer processing.

The interpretation can, in fact, be considered to be a continuation of the validation. The flight-test engineer usually knows (from theoretical or simulation studies) what to expect from the test. Ideally, the test results will validate the theoretical models which were used. If the results differ from the predications, either the physical phenomenon investigated was different from what it was though to be, or there has been some error in the measurements or in the data processing. Then the theoretical background of the predictions should be reconsidered, and the test and data processing procedures should be checked until the discrepancy has been found. The investigation of unexpected results is often more difficult if automatic data collection and processing systems have been used. During manual processing, the human operator conscientiously follows every step in the data processing and will often find that something unpredicted has occurred long before the final result has been calculated. In automatic systems the human interpreter often sees only the final results. It may be necessary to repeat the processing and to have outputs at intermediate stages before the reasons for an unexpected result can be found.

Even if after interpretation the operation has been judged to be satisfactory, one final step should be taken before the results are published in a test report. The flight-test engineer should reconsider any remaining uncertainties in the conclusions of the text rather than have them discovered later by others.

10.2.9 Short description of a few processing techniques

Application of calibrations

The calibrations are used to convert the measured data from the units in which it was recorded (e.g., millimeters on a continuous-trace recording or counts from 0 to 1023 in a ten-bit digital recording) into the engineering units in which they must be interpreted.

When setting up the sequence of preprocessing operations, it should be kept in mind that large errors or inaccuracies can occur if the wrong sequence is chosen. Procedures should be checked to see whether or not the resulting errors can be neglected.

In Chapter 8, it was mentioned that the overall calibration of a measuring channel is usually determined from the individual calibrations of several components. The combination of these component calibrations must be done with care and on the basis of a good understanding of the characteristics of each component. The number of calibration points must be carefully chosen by the calibration engineer in relation to the required accuracy.

When preparing the calibration data for application during data processing, individual channels may have special requirements due to the following reasons:

- the instrument has hysteresis,
- in-flight calibration points (standardization) have to be taken into account,
- the final calibration may depend on a variable which is measured in another channel. Such variables may be the supply voltage, temperature, or a parameter which causes cross-axis errors, and
- the parameter is measured by a coarse-fine method on two channels.

These aspects will be separately discussed in the following paragraphs.

In case of hysteresis, the calibration will usually be made first by increasing the input parameter slowly to the desired values and then decreasing it in the same way. The same values of the input parameter will be used during the increasing and the decreasing part of the calibration, though often not all values are taken during the decreasing part (see Fig. 10.1A). The final calibration is usually determined by the average of the "increasing" and "decreasing" values of the input parameter. The points where no decreasing values have been taken are interpolated. Usually the average calibration, so obtained, is sufficiently accurate. Only in cases where extreme accuracy has to be obtained will it be necessary to use special calibration data which have been measured during a simulation of the expected flight conditions (see Chapter 8). In some instrumentation systems in-flight calibration points are taken. Usually these are used to verify whether the calibration has changed and do not affect the calibration values to be applied during data processing. Sometimes they are, however, used to adjust the zero points and/or the sensitivity of the original calibration. If that is necessary, the computer program for the application of the calibrations can be adapted to make these corrections.

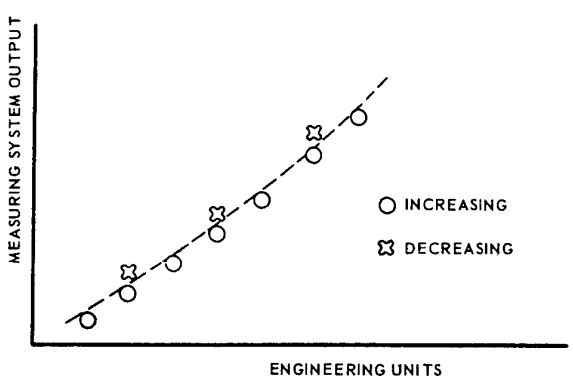

Figure 10.1A Example of a calibration curve showing hysteresis.

If the calibration depends on a value measured in another channel (supply voltage, temperature, or a cross-coupling parameter) the values of this other parameter must be determined before the calibration is applied. This will usually mean that the calibration of this other parameter has to be applied first. When the other parameter is the supply voltage or temperature, a constant value can often be used for part of the flight or even for a complete flight. For effects such as cross-coupling, the calibration must be adjusted at each point.

In some cases where the accuracy obtainable by a single channel is not sufficient, a parameter is recorded on two channels, a coarse and a fine channel (see Fig. 10.2A). The coarse channel, which is single-valued for the complete range, is only used to determine which of the fine-channel calibration curves has to be used. A calibration can be stored in the computer by many methods; two heavily used methods were the polynomial method and the table "look-up" method.

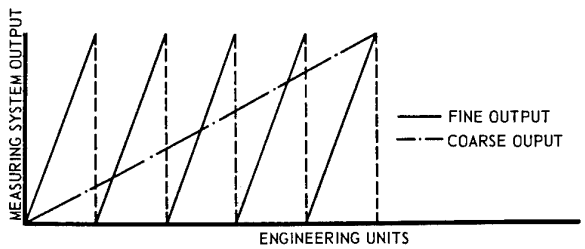

Figure 10.2A Calibration curve of a coarse-fine system.

Using the polynomial method the calibration curve is approximated by a polynomial function. The advantage of this method is that only the coefficients of the polynomial have to be stored in the computer memory, which requires little memory space. The coefficients of the polynomial can be determined in a separate computer program which calculates the polynomial of the lowest degree which fits the calibration points within specified limits (see Section 10.5). The degree of the polynomial should not be made too high, because then there can be anomalies between the calibration points. Usually most calibrations can be approximated sufficiently by a third-degree polynomial, though fifth-degree polynomials are used. If extreme nonlinearities occur (as for instance in the lower range of normal pointer-type airspeed indicators) it may be necessary to display the calibration curve, together with the calibration points, to the calibration engineer before it is approved for data processing) (see Fig. 10.3A).

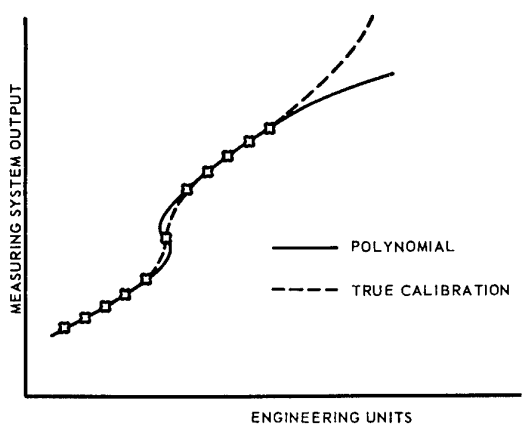

Figure 10.3A Examples of errors that can occur by interpolation and extrapolation using the polynomial method.

When the table method is used, the complete table of calibration points is stored in the memory of the computer. Generally, linear interpolation is used to determine the values between these points. This method requires more memory space and the actual computation may also take more time than with the polynomial method.

A careful check of the calibration must be made by the calibration engineer before it is released for use in data processing. Whenever possible, this check should include the calibration data that are entered into the computer, as well as the form in which the application programs will use them, as discussed in Chapter 8.

Smoothing and filtering. As stated in Section 10.2.4, the term "smoothing" is used for reducing random fluctuations in the measurements, while filtering denotes modification of the frequency spectrum. These two concepts are, however, closely related and smoothing can be done by means of a low-pass filter. The cutoff frequency of the filter should be below the sampling rate of the signals to be smoothed, but well above the frequencies of interest, because otherwise errors of omission (as defined in Chapter 7) will occur in the result. Both analog and digital filters can be used.

Smoothing and filtering are especially important if the data processing involves differentiation. The functioning of filters has been discussed in Chapters 4 and 8. For sampled data the discussion in Chapter 7 is of great importance. Frequencies higher than half the sampling frequency introduce aliasing errors. These cause spurious signals at lower frequencies which cannot be eliminated. The sampling frequency in the data collection system should therefore, be chosen with care and additional pre-sampling filters should be applied in the data collection system where necessary. Aliasing errors can, however, also be introduced during data processing if the data rate from a channel is reduced before filtering is applied.

Digital filters have, as do analog filters, an amplitude and a phase characteristic and the filters should be chosen so that the errors of omission as defined in Chapter 7 do not become significant. Digital filters are based on convolution, either by means of time-domain algorithms or by means of the fast Fourier transform. Implementation can be done with special-purpose hardware or in software for general-purpose computers. The advantages of digital processing are the flexibility and the accurate drift-free operation, although quantization effects in both signal and coefficients must be taken into account. There are also adaptive filtering methods in which the filter characteristics automatically adapted to the frequency of the low-frequency part of the signal (see Refs. 10.1A, 10.2A, and 10.3A).

Time correlation. Time correlation is required when the values of two parameters must be determined for the same time interval when relative phases of two parameters must be determined. As in each individual measuring channel a lag or phase shift can occur, it is necessary to reconstruct the original curve from available data on the dynamic characteristics (see Chapter 4) before the time correlation can be established. In practice, three types of time correlation can be distinguished:

- the signals have been recorded by the same recorder or by different recorders with the same time base. If the signals have been recorded continuously, the measurements in both channels can simply be read at the same time. If the signals have been sampled, one of the signals has to be interpolated at the time at which the other was sampled as described in Chapter 7.
- the signals have been recorded by different recorders which do not have the same time base. This often occurs when one recorder has been used on the ground (for instance with a cinetheodolite system) and the other has been used for making measurements in the aircraft at the same time, and
- most modern time code generators can be synchronized to a common time before the test begins. If they cannot, a "delta" time can be measured and used as a constant to correct each time source to standard time.

Linear or higher interpolation can be used as described in Chapter 7. In general the frequency of the common time base can be less if higher order interpolation are used for obtaining the same accuracy. The computations are, however, more time consuming.

When data from different recorders have to be synchronized, it is often difficult to find out which time-base on the one recording can be correlated with those on the other recording. The use of coded time-base signals has become universal, and the correlation can be established by reading the code. The time code must be selected to have the required resolution (e.g., 1 msec or 0.1 msec). Many preprocessing systems can create finer timing intervals that are available in the code by dividing the code intervals. The ability of the time processing routines to handle timing anomalies, such as time "drop outs," noisy timing code which cannot be accurately decoded,

or re-initialization of the time at midnight, is one of the most critical items in allowing automated data processing to work without excessive manual intervention. If the normal correlation has failed, it is often possible to restore it by finding particular events, such as conspicuous maneuvers of the aircraft on both recordings and to start counting pulses from there (see Chapter 13). This requires special features in processing software to accommodate the time corrections.

10.3 PROCESSING HARDWARE CONFIGURATION

10.3.1 Computer types

The major division between computers in the 1960's and the early 1970's was between analog computers and digital computers. While both these technologies still exist, the intervening 20 years has seen the computer's size, interfacing capabilities, speed, and memory capacity make tremendous improvements. There are many computer workstations which have much more processing power than mainframe computers of only ten years ago. However, as one progresses to more capable computers, increased capabilities become readily apparent. For example:

- multi-programming, executing more than one program at a time,
- multi-processing, servicing more than one user at a time,
- ability to support a large number of peripherals, large disk formats, and a variety of printer/plotters and displays,
- increased processing speed, and
- hot off-the-shelf software, eliminating the need for software redevelopment.

There is no "one" computer that is right for a program. A small personal computer may be sufficient to process all data for a report, but may not be easily interfaced with appropriate media produced by the pre-processing system. Not only must one select or use single computers to get the job done, but one must consider how to interface data products from multiple computers doing distributed tasks. Interfacing computer media/systems is not a trivial task. Many testers have fallen into the trap of thinking that because it "ought to be easy, straightforward, etc.," it will be. It is the author's experience that data systems integration is one of the most challenging jobs for flight testing. Although most organizations do not go out and acquire more computers for each flight-test program, they may end up interfacing many different computer systems.

Acquisition of new computers should be thoroughly planned, (hopefully by experienced data processing personnel) so that they fit in with the current requirements. If all current requirements can be met and future requirements can also be provisioned for, so much the better. However, emphasis should be on satisfying the current requirements.

Special-purpose computers are usually more limited in their architecture and therefore, their applications, Some examples of special-purpose computers are onboard computers such as those embedded in avionics systems (bus controllers, flight-control computers). For ground applications integrated pre-processors for telemetry front ends, graphics workstations, and PCM system controllers and frequency analyzers are typical special-purpose computers. These special-purpose computers may be a prime source of processed data from the test aircraft although some modifications of standard protocol may be required to access this data. It offers the potential for acquiring "engineering units" data in a computer-compatible form onboard the aircraft.

When selecting a computer system, the first choice is between a special purpose computer and a digital computer. Few, if any, data processing stations are without a digital computer at the present time. But often there are, besides this digital computer, some special computing devices which may be either standard digital computers of special-purpose type such as frequency analyzers, etc. The main advantage of special computers is their inherent speed. For this reason, they can sometimes be used in online operations for which the general purpose digital computers are not suitable. Examples are frequency analysis and computations with models which have nonlinearities. As the speed and capacity of digital computers have increased, these advantages have become less and less apparent. The present trend is toward the replacement of analog devices by digital computers.

The choice of digital computer depends heavily on the amount and kind of work which must be done in the required turnaround time. For computations involving a small amount of data, a desk computer or terminal to a large general-purpose computer system may be sufficient. For more demanding flight-test programs, a general-purpose computer may be shared with others or even one or more computers may have to be reserved for this purpose. The main aspects to be considered in the choice of a computer are:

- The hardware system. Even if a pre-processing computer is used for data reduction, the number of input/output (I/O) operations of the computer is usually larger for data processing than for many other computer applications. Modern computers can have separate processors for peripherals such as tape-units, discs, drums, printers, plotters, etc., which can operate simultaneously with the central processing unit.
- The memory cycle time. This gives a general indication of the speed of the computer.
- Multi-programming capacity. Because of the large number of relatively slow I/O operations required in flight-test data processing, the central processor of the computer is rather inefficiently used. This can be improved if the computer has multi-programming capability. In such computers several programs are stored in the memory and the computer will start working on the program with the highest priority until an input or output has to be done for that program. Then the computer will switch to the program with second priority while a separate controller takes care of the input or output for the first program. When this has finished, the computer will switch back to the first program while an I/O controller takes care of the input and output for the second program, etc. If the number of simultaneous programs is small, this can considerably improve the efficiency of the computer. If the number of simultaneous programs becomes too large, excessive memory capacity and too long a turnaround time for the low-priority programs will defeat the purpose.
- Online processing suitability. Online processing is used to a larger extend in modern real-time systems. The main problem from the point of view of computer technique is that the processing must on the average be as fast as the input data coming in. This gives additional requirements on the programming of the data processing, and in some cases it may be necessary to do the programming in machine or assembly language because this will decrease the program execution time.
- The operating system. This is the total of all software programs which executes and monitors the computer operations. It includes programs for management and arrangement of data streams, the drivers for various peripherals, programs for protection, testing, and intervention. It performs all functions that a programmer will use in the execution program.
- Compilers. Different programming languages can be used for programs such as online programs, programs with much I/O, programs for certain complicated numerical calculations, etc. The compilers for these languages are not yet available for all computers.
- Compatibility. There are several compatibility problems which can influence the choice of a computer system. In the first place, it has been noted that a "computer-compatible" tape produced by one computer (for instance, a pre-processing computer) often cannot be read by other computers because of the extremely narrow tolerances in tape readers. Also, there may be differences in compilers, even if they have been made nominally for the same computer language. This may require extensive and often difficult rewriting on already existing and proven programs.
- Access to the computer system. If the same computer is also used for other applications, the priority assigned to the flight-test processing programs may heavily influence the turnaround time, and
- Possibility of human intervention. Though many imperfections in the test data can be foreseen and programs to solve them can be made, it still happens that human decisions have to be taken during the execution of the program. For this purpose, the computer should be equipped with displays so that these decisions can be made without too much delay.

A short discussion of data processing equipment follows.

10.3.2 Equipment for quick-look and instrumentation checking

The task of this type of equipment is discussed in Section 10.2.3 and can be summarized by saying that generally for quick-look a rough trace of a few channels is necessary; for instrumentation checking it is necessary to

verify whether all channels have produced outputs which vary within predetermined limits and whether the calibrations have not changed. As described in Chapter 8, a number of these instrumentation check requirements can be fulfilled by counters and warning lights in the aircraft and by pre-flight and post-flight checks which can be recorded on the same tape as the data. In some cases, in-flight calibration data have also been recorded on tape.

While strip chart review is still a prime quick-look data source, the trend in quick-look checking is to do review and analysis on graphics workstations using history files created with real-time telemetry data. The same systems can be used with a quick run through the onboard tape. Avionics testing also will use video recordings to review test results for quick-look.

In most cases the pre-processing equipment is used for obtaining quick-look and instrumentation check data. It is usually done in a preliminary run of the tape through the equipment and is often combined with the selection of parts of the tape that must be further processed.

Special problems occur when the flight testing and the data processing are performed at different locations. Special transportable equipment is then used for quick-look and instrumentation checking, often mounted in a van. The equipment will generally be built along the same lines as the pre-processing equipment and will often use the same components. With modems and satellite communications systems, transmittal of remote data to the data center can easily be accomplished.

10.3.3 Pre-processing equipment for magnetic tapes input

The equipment of a pre-processing ground station must be able to handle magnetic tapes which may vary in the following aspects:

- Tape width and track arrangement. Tape widths from 1/8 in. and 1/4 in. (in commercially available cassettes) to 2 in. are in use in both airborne and ground equipment. Flight-test standards have been made by the Inter-Range Instrumentation Group (IRIG), (Ref. 10.1A) for 1/2 in. tape with 7 or 14 tracks and for 1 in. tape with 14 or 28 tracks. Mot tape recorders specially manufactured for airborne applications are constructed according to these IRIG standards,

- Modulation methods for analog recording. The signals are recorded on tape by direct recording or FM. Several types of FM recording are in use (see Chapters 11 and 12). IRIG has only tape recording standards for single-carrier FM for several combinations of carrier frequency and tape speed. The multi-subcarrier systems standardized for telemetry are also used for tape recording. These include proportional-bandwidth and constant-bandwidth systems,

- Modulation methods for PCM digital recording. Digital tapes can be recorded in parallel or in serial by several modulation methods (for example, NRZ or bi-phase). Parallel recordings can have different numbers of bits per character. Serial recordings can have different word and frame synchronization methods. The detection of words and frames can be done by either hardware or software. The hardware methods are normally faster, software methods are more flexible. New preprocessors offer both techniques in a method transparent to the user, and

- Different types of telemetry tapes. These may be recorded in the telemetry ground station with a carrier (pre-detection recording) or after detection (post detection recording). In analog and digital telemetry most of the modulation methods mentioned for analog and digital flight tapes may occur, though sometimes in other variations than are used for flight tapes by the same flight-test center.

Important design characteristics of the pre-processing station are:

- The degree of versatility. Will the center have specialized pre-processing equipment for each of the variants mentioned above, or should all types be handled by one versatile piece of equipment? Although there is a tendency toward less specialization in this respect, it has in some cases been found that significant delays can occur because the pre-processing equipment is engaged in time-consuming processing of other inputs, and

- The degree of automation. In early quick-look and pre-processing computer systems it has been found that the manual preparation of these systems and manual test procedures and fault detection require considerable time. In modern systems, a high degree of automation of these functions is normally specified.

In most modern flight-test data processing stations separate "pre-processing" and "computation" computers are used. The main reason for this is that many of the pre-processing functions (such as copying of flight tapes, channel selection, data reduction within each channel, digital format conversion, and the production of computer-compatible tapes) require relatively long computer I/O time but only very little computation time. As small computers with the same I/O speed as the large computers have become relatively inexpensive, the best cost effectiveness is obtained if these functions are done by such small computers. The large computers, which are often used for many purposes, other than flight-test data processing, are then more efficiently utilized. The division of the pre-processing functions between the two computers depends on many considerations, such as the availability of the large computer, the turnaround time required, etc. In some cases, all pre-processing functions mentioned in Section 10.2.4 are executed in a pre-processing computer, if necessary, in several consecutive runs. In other cases the more complex pre-processing functions, such as filtering and the application of calibrations, are done in the large computer.

As the flight tapes usually do not have inter-record gaps, the input tape unit to the pre-processing computer has to run continuously. This means that the pre-processing computer functions in an "online" mode even if further processing is not online. The problems mentioned for online operation in Section 10.3.1, therefore, always apply to pre-processing computers. This online operation need not, however, be done at the same speed as the data were recorded. It is possible to read the tapes at a higher or lower speed than they were recorded.

10.3.4 Equipment for analyzing photo-panel recordings and continuous-trace recordings

The reading of photo-panel recordings is a purely manual process. The film frames are projected one by one and the relevant instrument dials have to be read in a pre-determined sequence. Channel selection is possible, that is, the operator only reads the instruments which are necessary for a particular analysis. The data read from the film can be collected in tables or can be manually entered for further analysis in a computer. It is possible to read about 50 data points per hour.

Many attempts have been made to automate the reading of continuous-trace recordings, but without much success. Semi-automatic equipment is now generally used which provides a desk with a film transport mechanism, on which the film can be laid or projected. The operator can move cross hairs to the point to be measured. When the cross hairs coincide with the point, the operator pushes a button and the coordinates of the point are automatically recorded on paper or magnetic tape. These devices make it possible to read 1000 to 2000 points per hour. Similar devices are also used for reading cinetheodolite film (see Chapter 13).

10.4 SOFTWARE SPECIFICATIONS AND DEVELOPMENT

This section will deal with issues in the specification development and applications of software and firmware (for microcomputers). The assumption made in the following is that the hardware suite to be used is already finalized. There is nothing more difficult than trying to do software and hardware concurrently.

Software development really is the writing of a set of computer programs to accomplish the goals of the project. Systematic or structured programming is needed to thoroughly define the input variables, the output variables, and the intervening algorithms to be executed by the program. Because the measurement lists for test programs are constantly evolving in the early stages of a program, and test teams are being formed, it is often difficult to get the previously mentioned items defined. Usually the projects are well enough organized to discuss broad classes of measurand types and resulting data products required. For example, one may know that performance and flying qualities testing is to be done. Thus, one can estimate that certain standard data products associated with performance testing (for example, drag polars) will be produced.

For most average or larger programs, the planning of the data processing warrants the attention of a program manager, who should be assigned the responsibility for gathering requirements, identifying significant milestones, proposing and managing schedules, etc. The manager should manage an iterative process which works to refine the definition of the available data sources (airborne and range instrumentation and simulations) of the flight-test maneuvers to be flown (test plan) and obtain from the flight-test engineers the data products required. This program manager must perform requirements control, validating requirements and not allow casual, unofficial changes in them. At some point, the requirements must be "frozen" and development of detailed software requirements completed. The project mathematicians, data engineers, data production analysts, etc., must form a cohesive team to work on the software development.

No distinction has been made here between use of already existing software programs and new development because existing software must be reviewed against the requirements to see if it will do the job. If the

modification is required, is it worthwhile or is new software required? Validation of modified software represents the same challenge as for new software. In any case, there must be effective communication between the instrumentation engineer, the flight-test engineer and the software development team if adequate software is to be developed and delivered to meet test schedules. Changes in requirements must be treated as "new" until its effect on the development effort can be assessed.

Pre-processing software may be straightforward, with completion easily attained, when the aircraft data format is identified. If, however, the format is unique, new routines may be required to demultiplex the data. If unusually accurate time correlation is required (for example, for navigation systems testing) the new method or modified software may be required.

10.5 DATA FILES AND ARCHIVING

A related problem is the long-term storage of data. For some types of flight tests, such as an investigation of ad-hoc problems in operational aircraft, the raw data can be destroyed when the data processing and interpretation is finished. Only the essential processed test results are retained in a test report. However, most flight-test data have to be stored for longer periods, especially those from prototype flight tests and tests with experimental aircraft. When unexpected characteristics of the aircraft or of its systems are found, it is usually less costly to look for corroborative evidence in the data of previous flights than to make a series of new flights. When the nonsteady flight-test techniques mentioned in Chapter 1 are used, the availability of earlier flight-test data is even an essential characteristic of the data analysis procedures. many manufacturers keep their flight-test data as long as aircraft of that type are flying; they can often be of great assistance when a solution has to be found for problems that only become apparent after the aircraft are in operation. The data (which are kept) are always the original flight data because they contain the maximum amount of information. New mass storage systems will soon offer the potential for converting original flight data to computer-compatible form, which is safer to store than magnetic tapes, and is more easily accessed.

Data file/archive management is a unique task that is often unplanned and many times occurs by default. Past (and present) practice was to archive the original analog tapes and test reports. When one needed to reference old data, one either had to read through stacks of test reports or try to process the raw data tapes. Unfortunately, if the old calibration databases were not maintained in historical order or were unavailable, one could not process the data. With aircraft staying in inventory longer and longer, these practices lead to expensive, unnecessary re-flys of tests to recover data or to redefine the baseline.

The time to determine data file management and archiving requirements and to formulate an approach to meeting them is well before flight testing begins. A focal point organization must be selected to do this task. Users of the data must identify their requirements for access (amount, frequency, data products required, contingency plans, etc.). It would be desirable to preprocess the entire suite of data collected on a flight, along with database information, so that it was available to engineers via random access time. Any time one needed to access data one could call it up and process it on a workstation or a computer. Even though mass storage technology has made gigabyte disk storage a reality, one cannot store much more than one full flight's data on a disk. Storage of raw data rather than EU data can potentially double the capacity, but a 200-flight program still would use a prohibitive amount of disks. A reasonable compromise would seem to be to store all data which was processed post flight on disk (or tape), and keep the analog tapes for bulk storage. Large data processing facilities are having significant problems with this approach since it still generates large numbers of digital tapes as well as retaining all the analog tapes. However, since new technologies such as optical disks are maturing and acknowledging the storage problems discussed above and making provisions to deal with them is a double task. In the near future optical storage techniques and other tape media (special cassette juke-box storage) offer some relief to the archiving problem. However, new DAS and increased instrumentation data rates and requirements (for example, 50 Mbit/sec avionics data bus) may outpace the growth in storage capacity/density.

10.6 CONCLUDING REMARKS

Only the basic principles of the operation of a data processing station for flight testing could be reviewed. The main emphasis has been on medium-sized and large stations with a relatively large amount of automation, though many of the principles also apply to small-scale tests.

A successful operation can only be realized when the planning of the data processing is started at a very early stage and when there is good cooperation between the flight-test engineer, the instrumentation engineer and the computer specialist.

10.7 REFERENCES

10.1A. Nowak, D.J. and P.E. Schmid, Introduction to Digital Filters, IEEE Trans. on EMC, Vol. 10, No. 2, June 1968.

10.2A. Oppenheim, A.V. and C.J. Weinstein, Effects of Finite Register Length in Digital Filtering and the Fast Fourier Transform, Proc IEEE, Vol. 60, No. 8, Aug. 1972.

10.3A. Gold, B. and C.M. Rader, "Digital Processing of Signals," McGraw-Hill, NY, 1969.

10.4A. Telemetry Standards, document 106-71, Inter-Range Instrumentation Group, Range Commanders Council, White Sands, Missile Range, NM.

10.5A. Cameron, Bruce T., "General Calculation Capability in a Production Data Reduction Environment-Batch Processing," Society of Flight Test Engineers (SFTE) sponsored symposium on computer aided flight testing, Oct. 1970.

10.6A. Stinson, J.J., "An Automatic Telemetry Data Acquisition System," presented at ISA Aerospace Instrumentation Symposium, NV, 1971.

Chapter 10B

DATA PROCESSING

by

Stan Yount
NASA Ames Research Center
Dryden Flight Research Facility
PO Box 273
Edwards AFB, CA 93523-0273
United States

10.8 OPERATIONAL SUPPORT DATABASE

10.8.1 Introduction

Data are collected for flight research and test programs during flight activities for subsequent analysis and report purposes. The instrumentation installed on a test vehicle collects the data for ultimate recording on a computer legible medium such as magnetic tape or disk. Software systems that are generally user specific have been developed for the analysis requirements. The analysis requirements have become more complex because of the increasing numbers of parameters and associated data that are measured by airborne data acquisition systems (DAS). The software systems developed to handle this data tend to consist of two distinct functional elements. The first, or processing element converts sampled data to engineering units (EU), then analyzes the resulting information. The second, or support element consists of the collection, organization, and management of the data required to support those functions performed by the processing element. Some software systems of 25 years ago combined the processing and support elements into a single processing package. This was caused in part by the technology in airborne DAS. Older systems incorporated recording devices such as oscillographs, whose bulk and weight alone limited the numbers of parameters recorded. Today's technology, which includes pulse code modulation (PCM) data encoding, transmission, and recording techniques, enables the recording of parameters and their data many times over that of the earlier systems. The increased data handling capacities of PCM and other technologically similar airborne DAS have brought about growth in the support function. This growth includes complexity of the support function that may make it desirable to separate it from the processing function. This separation may involve a computing system dedicated solely to accomplishing the support function. This section will provide guidance in developing an operational support database (OPSDB) function that serves as the support element in flight-test data processing activities.

10.8.2 General

The essential elements in the processing of data measured during flight-test operations are vehicle calibration, parametric, DAS definition information, and parameter lists (lineups). With these essential elements, the OPSDB enables the location, identification, and EU conversion of data collected during flight-test activities into meaningful results. One additional element in an OPSDB system is the ability to reconstruct the calibration, parametric, DAS, and lineup information data sets as they existed for any given operation. An OPSDB system essentially consists of

(1) calibration information to enable EU conversions,

(2) parametric information which defines the parameters measured by the DAS,

(3) specifications defining the functional characteristics of the DAS,

(4) instrumentation schemes, or parameters lists, which locate and identify measured parameters associated with each DAS, and

(5) history information to reconstruct calibration, parametric, DAS, and lineup configuration for specific operations.

The OPSDB data sets are derived from information originating with the instrumentation engineer and from calibration data applicable to the instrumentation installed on a test vehicle. The instrumentation engineer develops the DAS specifications in response to user requirements. Instrumentation is installed and interfaced to the DAS on a test vehicle, and is later calibrated for data reduction purposes.

The OPSDB system is a key element in the conduct of any flight project. The organization, content, and data management functions of the basic OPSDB should be determined by a development team familiar with end-to-end

data flow: an instrumentation engineer, a calibrations specialist, real-time and post-operative software developers, and a data management specialist. Utility functions to be applied to the OPSDB system should be developed based on requirements not only from the development team, but from a broader cross section of OPSDB information users as well.

10.8.3 System objectives

This section presents three objectives to consider when developing a general purpose OPSDB. These are general objectives and are not intended to include all of those one might wish to satisfy with an OPSDB.

10.8.3.1 Information consolidation

The first objective is to consolidate the calibration, parametric, DAS, and lineup information required for test data reduction onto a single computer system. Consolidating existing OPSDB functions will require planning to limit problems that may occur during the transition from current to OPSDB system. Test projects originating after OPSDB development is complete will be consolidated by design.

10.8.3.2 Elimination of redundant information

The second objective is to eliminate redundant information. Unconsolidated systems often maintain similar information in various locations which may allow discrepancies in data processing. Consolidation helps eliminate redundant information. In addition, if transcribed ledgers are seen as a form of redundancy (for example, hand written parameter lists developed during the buildup phase of a project) it is possible to provide an OPSDB system that limits data transcription by allowing users to perform those transcriptions electronically where the results will be more readily accessible to other users.

10.8.3.3 Limiting manual data entry

The third objective is to reduce, and where possible, eliminate the manual entry of data into an OPSDB system. Automating the data collection and distribution procedures will help satisfy this objective. For example, the calibration function could be done under computer control with results stored in machine readable form. This would eliminate transcribing the calibration data to data sheets for manual entry into the OPSDB system. If the OPSDB system were a computer other than the calibration controller, required data transfers could be accomplished through hard media (for example, magnetic tape and hard or floppy disk) or electronic link.

10.8.4 Calibration information

Calibration information, in the OPSDB context, falls into one of the two following general categories, laboratory calibrations, and hangar calibrations. Laboratory calibrations are performed on a new instrument for acceptance purposes and to establish a health profile of the instrument. The instrument's profile is updated when it is returned to the laboratory and recalibrated. The primary purpose of this monitoring is to reaffirm the instrument's flightworthiness. Laboratory calibrations may be used for data reduction purposes while performing spot checks or to check calibrations of the instruments after they are installed on a test vehicle to verify the instruments' condition.

Hangar calibrations are conducted in the static environment of the hangar and consist of information collected from instruments installed on a test vehicle. Stimuli applied to the instruments over a predetermined range of test points are recorded for later use in data reduction activities. Check calibrations, as noted in the previous paragraph, may also be periodically performed on instruments. Malfunctioning instruments are returned to the laboratory for more stringent testing and disposed of properly thereafter. The hangar calibration technique is how calibration data are collected and processed to yield results applied later in the EU conversion of test data.

For OPSDB purposes, calibrations consist of:

(1) polynomial coefficients derived through curve-fits of recorded test points, or direct inputs to accommodate predetermined equations (for example, strain gages and thermocouples).

(2) interpolation tables consisting of data points from the calibration process, and

(3) look-up tables for discrete bit and digital word decoding (collectively referred to as "discretes").

Using these EU conversion processes in data reduction software would then depend on determining the type of calibration information being represented and invoking a corresponding conversion algorithm.

10.8.5 Parametric information

Parametric, or parameter information pertains to the data being measured by the DAS and consists primarily of information specific to parameters themselves and is noncalibration in nature. Examples of parametric information include:

(1) parameter description (ASCII text),

(2) names of other parameters used to apply voltage or temperature corrections values to the parameter being defined, and

(3) information enabling the chaining, or concatenation, of parameter components to yield a single parameter (a method used to measure parameters whose bit resolution exceeds the word size of the DAS, necessitating the use of two or more DAS words).

These examples do not represent all the information pertaining to parameters that should be included in this area. The developers of the OPSDB system should work closely with the instrumentation engineer, other data reduction software developers, and the end-users to determine what information is required to satisfy overall project objectives.

Parameter information should be viewed separately from calibration information, since all parameters on a DAS need not be calibrated. For instance, parameters measured using unique instrumentation could have their conversion algorithms embedded in data reduction software, thereby eliminating the need for that information in the calibration area.

10.8.6 Data acquisition system information

The DAS information, in the OPSDB context, consists of specifications which define the onboard data system(s) (OBDS) or commutator(s). For example, OBDS specifications consist of data elements that can be used to set up ground station equipment for the decommutation of PCM bit streams, or identifying constant/proportional bandwidth channels for FM/FM data processing. The OBDS specifications for a PCM DAS would include such data items as bit rate, word and frame sizes, subcommutator information, etc. The OBDS information could also be used to develop a parameter list, or lineup, to identify parameters, their locations, and associated calibrations. (A PCM DAS is the type of DAS implied by the acronym "DAS" in the OPSDB context).

10.8.7 Lineup information

Lineups consist of parameter lists whose order is determined by the instrumentation engineer, usually by frame word position and frame number, or alphabetically by parameter name. Frame word position is the numeric sampling sequence value of a data channel within a DAS cycle. Frame number is the numeric value of the frame cycle containing the word in which a specific measurement appears. Frame number is meaningful only for DASs that include one or more subcommutators.

Figure 10.1B is a block diagram of the frame word position and frame number concept. A DAS consisting of a mainframe and one subcommutator that measures a total of 14 parameters, P1 though P14, is shown. The mainframe consists of eight data sampling positions and two sync words. The subcommutator is four deep and consists of two subframes (occupying frame word positions 1 and 2) which are used to measure parameters P1 though P8. Parameters P9 through P14 are measured in frame word positions 3 through 8, respectively. Using the frame word position/frame number technique to locate parameters, parameter P6 would be at frame word position two, frame number two. Parameters confined to the mainframe (that is, P9 through P14) would always be referenced by their frame word position and frame number one.

The lineup identifies parameters appearing in the various positions based on DAS specifications and calibration to be applied to the identified parameters. Lineups enable both real-time and post-operative data reduction functions to locate specific parameters and provide identifiers for calibration information required to perform the EU conversions of those parameters.

10.8.8 History information

History information is the archival/retrieval mechanism of OPSDB information. As operations occur, information regarding each DAS and lineup used, including parameter and calibration associations with each lineup, is uniquely identified and retained. This identification enables those configurations to be specifically reconstructed by locating the history for a desired operation and assembling the information into a prescribed format for follow-on use.

FRAME WORD POSITION →	1	2	3	4	5	6	7	8	9	10
FRAME NUMBER 1	P_1	P_5	P_9	P_10	P_11	P_12	P_13	P_14	SYNC_1	SYNC_2
2	P_2	P_6								
3	P_3	P_7								
4	P_4	P_8								

Figure 10.1B. Sample frame map.

10.8.9 System considerations

The OPSDB software system can take any of several forms. One key to implementing an adaptable system is the establishment of a requirements team whose members have a thorough understanding of the flight-test activities that will be supported by the following OPSDB software system. Some of the factors this team might consider are discussed in the following subsections.

10.8.9.1 Hardware system considerations

The hardware system available for OPSDB support will probably have the greatest influence on the OPSDB system to be developed. The characteristics and features of the hardware system will impact such items as:

(1) operating system software and utility software subsystems capable of being used for OPSDB support,

(2) the amount of OPSDB information capable of being maintained on-line and in the form in which that information can be maintained off-line,

(3) communication techniques that may be used to effect data transfers between the OPSDB system and other systems in the overall processing chain, and

(4) the number of users that can be supported concurrently.

The OPSDB functional capabilities could be influenced and, possibly, limited if an existing hardware system was chosen to implement the OPSDB system. Ideally, OPSDB system development would take place on a computing system whose existence was based on specifications designed to satisfy overall OPSDB design requirements.

10.8.9.2 Operating system considerations

The operating system (OS) on the OPSDB computer can influence the amount and complexity of user developed software required to support the OPSDB system. The OS also determines at what level software routines can be and need to be developed. An OS that provides limited user interface capabilities and minimal utility functions will require more applications software development to accomplish required tasks. A larger, more sophisticated OS, on the other hand, will provide extended capabilities that can minimize and simplify applications development. Developing procedures that use the capabilities of an extensive OS is also time consuming, however.

10.8.9.3 Number of computing systems involved in the collection and distribution of OPSDB information

It should be emphasized that the OPSDB information set should be generated and maintained in a manner as simple and straightforward as possible, regardless of computing system configuration. Some projects may have

access to limited computing resources for performing both OPSDB functions and data processing tasks (similar to the configuration implied by Fig. 10.2B). Other projects may consist of multiple computing systems where OPSDB functions can be separated from other data processing tasks (Fig. 10.3B). The methods by which data are acquired and distributed by the OPSDB system should be considered here also, taking care to allow for alternate means of data acquisition and transfer.

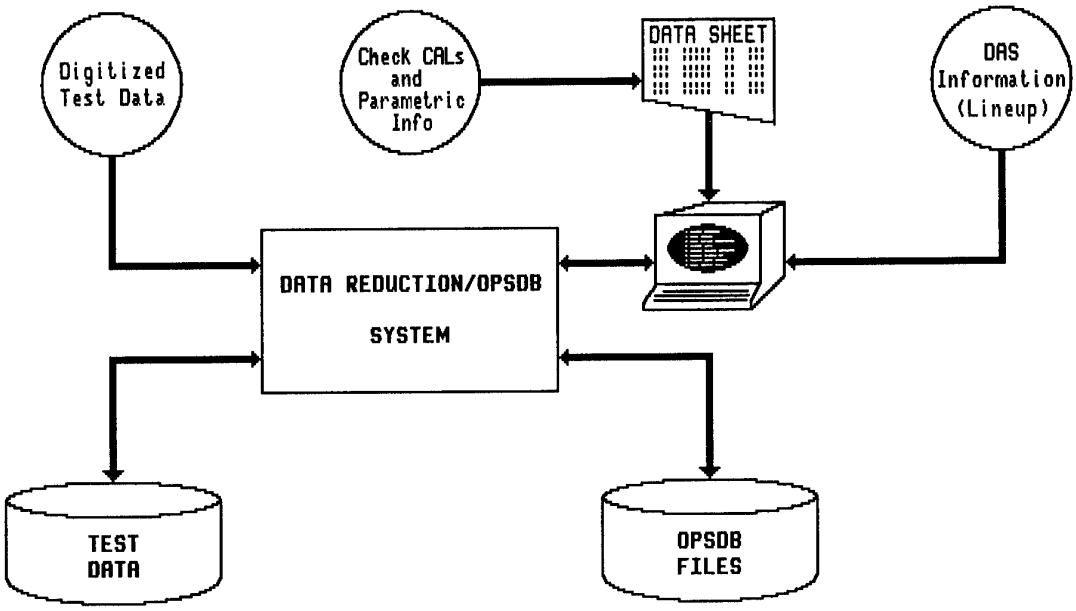

Figure 10.2B. OPSDB system with limited resources.

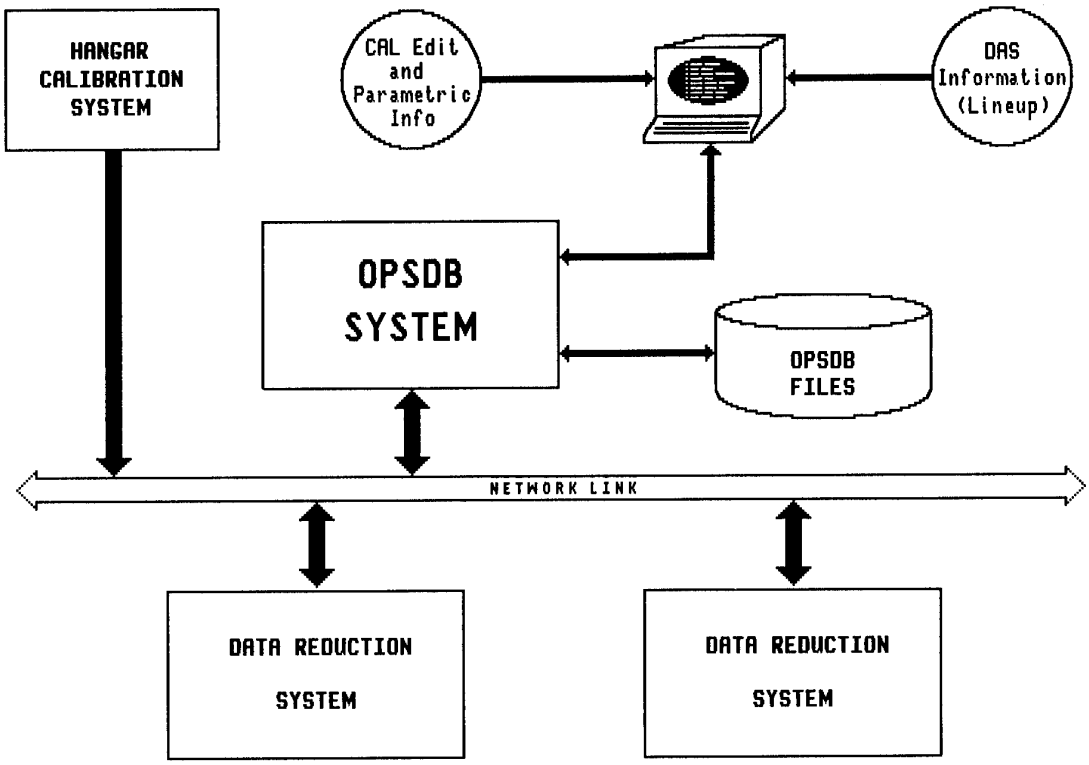

Figure 10.3B. Stand alone OPSDB system.

10.8.9.4 Operational and functional characteristics of end-to-end data handling

The operational and functional characteristics of end-to-end data handling should be considered to help develop OPSDB system specifications. This exercise can help scope the desired OPSDB by identifying: (1) OPSDB functions currently performed by other system components, and (2) additional functions to be handled by the OPSDB system. Ideally, the OPSDB system should function similarly on single and multicomputer configurations. The input/output interfaces required to process information collected from and distributed to other system components will work regardless of configuration with proper planning and design. Inter-computer information transfer problems can be minimized by adopting interface standards applicable to all system components (for example, generation and delivery of ASCII data files regardless of transfer medium, allowable record lengths and blocking factors, etc.). ETHERNET is a desirable networking medium for satisfying inter-computer communications and file transfer requirements. The Telecommunications Protocol/Internet Protocol (TCP/IP) and DECNet are communications protocols that handle inter-computer tasks well.

10.8.9.5 Archival and retrieval requirements

The ability to retrieve or reconstruct configurations applicable to various test operations is necessary to any OPSDB system. At one extreme, OPSDB information files generated and maintained using a text editor can be archived on magnetic tape using a filing convention for easy location of the physical media and information thereon. There are off-the-shelf filing systems that will do such archival/retrieval tasks, or they may be developed as a part of the OPSDB system using utility functions available on the computer's OS. At the other extreme, OPSDB systems using a commercial database management system (DBMS) for file generation and maintenance can be developed with archival and retrieval functions inherent in the system.

10.8.9.6 Project life expectancy and operational frequency

Project life expectancy and operational frequency should be considered. There may be no need to create a large, sophisticated OPSDB software system for a projected short-life project. At the same time, long-term projects scheduled to conduct test operations frequently will accumulate large quantities of OPSDB information. The OPSDB software should be designed to simplify information retrieval and reconstruction of information relevant to operations conducted at any time during the project.

How information is collected, handled, and exchanged between the OPSDB system and other system elements can be a limiting factor to operational frequency. The keyboard input of information from transcribed forms and data sheets would more adversely impact operational frequency than would higher speed, machine-readable inputs of that same data through magnetic tapes, disks, networks, or other peripheral devices.

10.8.9.7 Possibility of supporting additional projects with OPSDB software, current and future

It is important to consider supporting other projects with the OPSDB software system. An evaluation of the types of information required to support other projects should be performed when it is expected that ongoing and future projects would benefit from a tailored OPSDB system. Calibration and parametric information is fairly static in structural form and content regardless of project, as is history information. However, DAS capabilities and specifications may vary between projects and, over time, may change entirely. The DAS changes may also influence the structure and content of the lineup. The DAS and lineup areas, therefore, require particular attention during the OPSDB design.

10.8.9.8 Data items required to be maintained in each of the OPSDB categories

It is important to develop a list of data items to be maintained in the OPSDB before design efforts begin. The list will consist of items relevant to data collection and reduction activities. Construction of the data item list by the requirements team will give all members a better understanding of the organization's end-to-end test data handling, which will benefit OPSDB system development. The data items identified by the team should be categorized as calibrations, parameters, DAS, lineup, or history, A definition of each data item is required to explain its function within the OPSDB. The number of data items identified during this process will influence the choice of OPSDB maintenance mechanism (text editor or commercial DBMS) and help determine the amount of utility software that will be required.

10.8.9.9 Complexity of the DAS (commutation schemes, instrumentation, and lineups

The DAS characteristics, instrumentation, and influence on ensuing lineups should be considered in detail. The DAS complexity (for example, number of prime commutators, subcommutators and subcommutation techniques, and supercommutation) is a critical factor. The OPSDB must be able to accommodate any DAS configuration and

instrumentation encountered. In turn, lineup definitions reflecting a DAS specification must be attainable and supportable.

Lineups are based on the data sampling characteristics of the DAS. It is through the lineup that data reduction activities are made possible. Lineup maintenance in the OPSDB should be as simple and error free as possible. There are several ways to maintain lineup information, ranging from the use of text editors (usually simple, but not error free) to commercial DBMS which require special software development but permit a high level of data reliability. Lineup functionality should be a major factor in determining the means used to support and maintain an OPSDB.

10.8.9.10 Number of calibrated and discrete/digital parameters

The number of parameters to which calibrations will be applied, including discrete/digital parameters, and the quantity of information expected to be required for individual calibration and parameter definitions should be considered. Using a text editor to maintain OPSDB information becomes more cumbersome and unreliable as the number of calibrations, parameters, and their data quantities increase. A DBMS becomes a likely candidate for OPSDB maintenance when these data quantities are expected to periodically increase.

10.8.9.11 Expected frequency of parametric changes, calibration checks, and project operations

The frequency of changes expected in the OPSDB and operational schedules should be considered. Rapid turnaround in operations performed on a test vehicle may involve minimal changes in the calibration, parametric, and lineup configurations in which case maintenance activity on the OPSDB would be almost nonexistent. On the other hand, such changes performed during periods of rapid turnaround may require short response times in terms of OPSDB maintenance. The lack of error checking and data validation capabilities make text editors a poor choice for maintenance purposes in stressful situations. However, the ability to perform and provide for error checks and reasonable levels of data validation are standard features of DBMSs, making them reasonable candidates for incorporation into an OPSDB software system.

10.8.9.12 Database management system considerations

Database management systems can be grouped into three types depending on the characteristics of the data structure supported by the DBMS:

(1) hierarchical – consists of record sets structured in one or more hierarchies, or areas, stored and accessed in a top-down manner,

(2) networking – similar to hierarchical but capable of establishing links between other records in the same or different hierarchies, simplifying both data correlation and access, and

(3) relational – consists of records viewed logically in a two-dimensional sense by row (to establish record relationships) and column (to differentiate between relationships).

The type of DBMS to use for OPSDB support is a significant concern if a DBMS will be used to control the entry, modification, and access to OPSDB information. Any of the DBMS types previously noted could be used to implement the database. The choice of DBMS type will depend on previously mentioned system considerations and the desired functional capabilities of the overall OPSDB system.

The separation of information types (for example, calibrations, parameters, DAS, lineup, and history) is a desirable feature of the OPSDB system and can be done with a hierarchical DBMS. However, the limitations of a purely hierarchical DBMS might make this type of DBMS less desirable than one of the other types (that is, the inability to establish relationships between records of the same or other hierarchies, except through applications software routines).

A networking DBMS can also separate information types. Additionally, the networking DBMS enables links to be established between records in different areas. This capability enables the correlation of data from one record with current data in one or more other records (for example, associating the latest parameter and calibration specifications with a specific lineup location). The networking DBMS is a good choice for OPSDB information management. Figure 10.4B shows an OPSDB system based on a networking DBMS. Information in one data area is linked to information in another data area based on dependency information in one of those areas. Link-dependent information resides in the area from which a line is extended to a link (circle) on another area (refer to Fig. 10.4B). Once established, the links are bidirectional and can be used to traverse various paths through the database.

The OPSDB data structure associated with the system in Figure 10.4B could be defined in terms acceptable to a relational DBMS. All necessary relationships could be established giving the same result. The relational DBMS would be more flexible in that new records and their associations could be added to the database without impacting current applications software. Also, unanticipated uses of the database could be simplified. Like the networking DBMS, a relational DBMS would be a good choice for OPSDB information management because of its ability to establish relationships among records in various functional areas of the database.

The factors listed in the previous paragraphs are a few of the considerations that should be used in determining the characteristics of the OPSDB and software support system to be developed. Individual organizations may have other considerations. "No stone should go unturned" when developing design specifications for an OPSDB system.

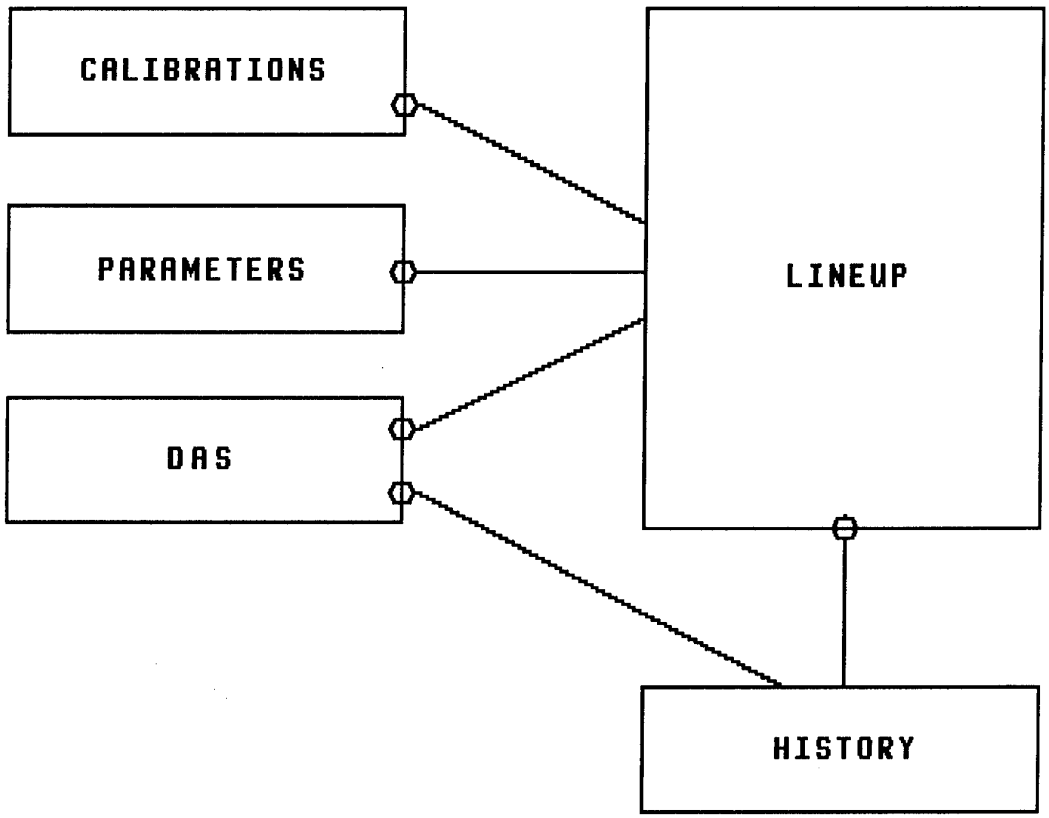

Figure 10.4B. OPSDB data structure.

10.8.10 Design alternatives

Two design alternatives are presented here. The first alternative uses a text editor to enter and maintain OPSDB information for project support purposes. The second alternative uses a commercially available DBMS for data entry and maintaining the OPSDB. Data transfers between systems feeding and retrieving information to and from the OPSDB system will most likely be accomplished by one or more of the following methods:

(1) terminal keyboard input of data from one computer into another from transcribed data sheets or hardcopy summaries,

(2) hard media (for example, tapes, disks/floppies, other peripheral devices), and

(3) network data transfers.

Keep in mind that OPSDB systems using features of both alternatives may be developed.

10.8.10.1 Text editor alternatives

Test data and OPSDB information for a project might be resident, managed, and accessible on a single computer as in Figure 10.2B with data reduction and OPSDB functions being distinctly separate. In this example, calibration procedures are performed on the instrumentation system of a test vehicle and results are transcribed to data sheets. The transcribed information is then input, along with complete sets of parametric and lineup information, into one or more OPSDB files. The means used to build and subsequently maintain the OPSDB files is a text editor or more simply, an editor.

Some means of correlating the data entries between files will be required when separate OPSDB files are generated for the various types of information. A data key identifying the information type must be included in each record where more than one type of information is stored in any one OPSDB file. In addition, assuming an 80-character record length (for editing convenience), it should be expected that more than one line, or record, of editor output will be required to fully define specific OPSDB entities. When multiple editor lines are required to define an OPSDB entity, collating information must be included in each record to identify the occurrence sequence of the data for the entry.

Calibration data would be handled in two phases. The first phase would be the entry of the transcribed data into a raw data file for subsequent processing. The second phase would involve the processing of that raw data file to generate EU conversion information. (For example, equation coefficients and lookup tables). Output of the calibration second phase processor would be an editor-compatible ASCII file. The file would include the necessary EU conversion information along with information type identifiers and data keys, and would be merged with any existing calibration file to reflect the current state of calibrations. Any existing calibration file could provide current information by making an editing pass to eliminate inactive entries.

A parametric data file would be generated and maintained solely with the editor. This file would include specifications pertinent to each parameter along with information type identifiers and data keys. Parameter records would be added, modified, and deleted as necessary to maintain currency with respect to the lineup.

An editor-compatible initial lineup file for each DAS would be generated using a specially developed software routine. Each initial lineup would be empty except for mapping information (frame word position and frame number), information type identifiers, and data keys. The lineup would be completed by editing the initial lineup (as often as necessary) to insert or modify calibration and parametric information in the appropriate frame word and frame number positions. The amount of information required to be inserted or modified in the lineup records will have been determined during the OPSDB requirements specifications process and must satisfy real-time and post-operative data reduction needs. If separate files of information exist for the calibration, parametric, and lineup information, then only identifiers might be required to be inserted in the lineup file to establish correlations between DAS measurement locations, parameters measured, and calibration information pertinent to the measured parameters. Conversely, a lineup file containing all of the required calibration, parametric, and DAS information could be correlated by design.

Use of the OPSDB information by real-time and post-operative support functions is simplified when calibration, parametric, and lineup information are correlated by DAS and consolidated into a single file. A correlation problem will not exist if the OPSDB system is designed to maintain information in a single file. However, if the OPSDB system consists of separate files (to simplify OPSDB data maintenance), information from the various files might require a correlation pass prior to use. Setup and processing functions performed by the real-time and post-operative systems would then access a correlated file to determine data tagging values for parameter identification purposes (lineup-parameter correlations) and EU conversion algorithms.

Consolidating the OPSDB information also simplifies data archiving. The information can be retained for near-term use on mass storage for rapid retrieval, or it can be saved on a more permanent medium such as magnetic tape for long term retention.

10.8.10.2 Database management system alternative

The second alternative consists of a computer system dedicated to OPSDB data management (Fig. 10.3B). Calibrations in this example are gathered through one or more smaller systems (noted as the hangar calibration system). Information is collected by the OPSDB system over an electronic link as well as through interactive terminal inputs. An electronic forms system is used to control the interactive inputs while network file transfers from the hangar calibration system to the OPSDB system use commercially available protocol software.

Each hangar calibration system can maintain a substantial amount of information in addition to the data obtained during the calibration processes. However, it is the data gathered during the calibration processes that is relevant to the OPSDB system. The OPSDB information consists of raw data points, their corresponding EU values, applicable parameters (instruments), and background information relating to the process itself (for example, equipment used, data, time the procedure was conducted, who conducted the procedure). Only pertinent data is transferred to the OPSDB system.

As noted, this alternative uses a commercially available DBMS to maintain OPSDB information. The DBMS is a networking system which enables data records in hierarchical data structures to be linked with data records in other structures defined within the database. Figure 10.4B is a diagram of a database structure that could be used in OPSDB development. There are five major data structures, or areas, in the database which include information pertaining to

(1) calibrations,

(2) parameters,

(3) lineups,

(4) OBDS specifications, and

(5) operational histories.

The design shown in Figure 10.4B will accommodate one or more projects for each database. A single database is defined for each test vehicle. Multiple projects can be supported by a single database when more than one project uses a single test vehicle.

The calibration and parametric information areas are designed and used as pools for relevant data storage and access. There are three basic hierarchical levels to both the calibrations and parameters areas which enable

(1) identification to each set of calibration and parameter information,

(2) periodic updates (revisions) of calibrations and parameters,

(3) post operative corrections of calibration and parametric information.

The OBDS area consists of records defining physical characteristics of a DAS (for example, bits/frame, bits/word, subframe information) that can be used in setting up ground station equipment. The OBDS information for a DAS is also used to construct a dummy lineup that will later be edited to assign parameters and applicable calibrations to measurement slots within the DAS. (A dummy lineup contains no parameter or calibration information and consists primarily of sync word locations, ID subcom counters, frame word position, and frame number entries initialized to predetermined status values).

The lineup area is edited to contain calibration and parameter identifiers associated with measurement slots within the DAS. The calibration and parameter identifiers are entered using specially written editing routines that accept inputs through the electronic forms system. Data are checked for consistency and validated before they are stored, and specified calibrations and parameters are linked to the slots. The lineup area is a dynamic area that reflects the current state of a DAS configuration. The lineup is placed on hold for support of a test operation by reproducing a limited version of its current state in the history area (see the following). Updates are disabled on the lineup while it is in hold status.

The history area contains reproduced lineup information pertinent to test operations. Each reproduced lineup in the history area is a subset of the lineup that existed in the lineup area when placed on hold. The reproduced lineups contain accounting information applicable to the related operation and minimal OBDS information. A partial set of accounting information relevant to an operation is generated during the lineup hold process and completed during an operation log process. Operations logged complete cause the release of lineups to further update activities. The history area provides the archival capabilities for operations internal to the database. Each operation will have a history entry.

User developed software required to maintain this database would typically include routines to

(1) enter/edit and check calibration and parameter data, performing curve-fits that result in equation coefficients or construction of lookup tables for calibrations,

(2) enter and check OBDS specifications for relevant DASs,

(3) generate and edit lineup specifications for defined DASs, establishing data links between OBDS, lineup, calibrations, and parameters,

(4) construct history entries with data links to OBDS and lineup areas, provide history area editing capability, and generate a consolidated setup file containing information required for data reduction activities,

(5) provide summary and status information pertinent to each database area, and

(6) perform special functions outside routine entry and editing capabilities (for example, database build, database load/unload, special data manipulations, and other OPSDB utility functions).

The data links mentioned in 3 and 4 in the previous paragraph provide the archival mechanism of the database (Fig. 10.4B). When a lineup is held, a link is established between each of the slots in the history area and its counterpart in the lineup area. When the lineup is later edited to reflect changes for future operations, information in the lineup that is attached to the history area is removed from the current lineup but not deleted from the database. The edited position, filled with updated information, is then inserted into the lineup and becomes current. Note that an archival link has been established with the OBDS information area. The OBDS link enables access to operational support information in a top-down manner, whereas the lineup links provide a means for bottom-up access.

10.8.11 Utilization philosophy

The usage philosophy for OPSDB systems patterned after either of those presented in the design alternatives would be similar. Functionally and procedurally, such systems would be identical for all practical purposes. Operationally, however, the systems would differ because of the software mechanisms (DBMS or text editor based) used. This section is concerned only with the procedural aspects of such systems and can, therefore, be equally applied to either.

Generation and maintenance of OPSDB information could begin early in a project with the entry of parametric specifications into the OPSDB as they become known. This can be one of the most time consuming functions in OPSDB data management because the information is obtained only through human input. Once a complete set of parameter specifications has been established in the OPSDB, this activity will settle to more reasonable levels with respect to other OPSDB maintenance activities.

The DAS configurations can be defined to the OPSDB once they are known. Defining these configurations will enable the construction of dummy lineups which can be edited to include parametric and calibration information as they become available. Redefinition of a DAS will be necessary only when structural changes in the DAS occur (for example, addition/deletion of a subcommutator, relocation of frame words in which subcommutator data appears). A redefined DAS must be accompanied by another dummy lineup which is edited to reflect parameters and calibrations associated with the new DAS definition.

Calibration data are entered into the OPSDB system and processed appropriately as the data become available. As with the entry of parametric data into the OPSDB, calibration data entry can be time consuming if keyboard input through a data terminal is required. Hangar calibration systems used to collect calibration data and transfer the information to the OPSDB by way of network link or hard media would minimize data entry time, reducing it to that required to monitor the process and obtain summary information.

The lineup requires only minimal inputs for each measurement location. The required inputs consist of identifying appropriate revisions of both parameters and calibrations and the bit group (within the related data word) associated with the identified parameter. Once parameters and calibration have been defined within the OPSDB, it is a simple matter to build a fully functional lineup. (A lineup complete with parametric and calibration identifiers can be created before parameter and calibration specifications are entered in the database, but it would not be functional).

Once all necessary lineups are functional, the information associated with the current state of those lineups can be collected and distributed for real-time and post operative data reduction. The information distributed for real-time support use is identified and archived for future reference. It can be retrieved immediately for DBMS based systems and nearly as quickly for text editor based systems.

Instrumentation changes and recalibration operations will be performed on a test vehicle. This type of activity will require changes in the OPSDB to reflect the current state of the vehicle's instrumentation system. Specifications for new parameters and calibrations will be entered into the OPSDB just as they were during project build up, while updates or revisions will affect existing specifications. Lineup modifications reflecting the updated state of parameters and calibrations are performed just as they were during project build up.

The new set of current information that reflects instrumentation and calibration changes can be held and distributed to users for subsequent operational support use. The OPSDB information is then made available for further update activities as the subsequent operations are logged complete.

The update-and-use cycle continues for the life of the project, becoming fairly routine once the project is underway. Major perturbations should be expected only during periods where vast changes in the instrumentation occur.

Many summary reports are required of OPSDB information. Lineup (parameter) list summaries are commonly requested as are summaries of calibration and parameter specifications. These summaries and others that will be required can be accommodated by applications routines developed using language compilers or utility functions that are a part of the OS and, if used, the DBMS.

10.8.12 Appendix

Description of an operational support database

This appendix describes a functional OPSDB. The OPSDB diagram, Figure A-1, shows the database, which is a networking database. It was developed on a Digital Equipment Corporation (DEC) VAX-11/780 using DEC's Database Management System, Common Data Dictionary, and FORTRAN Compiler with Data Definition Language option software packages.

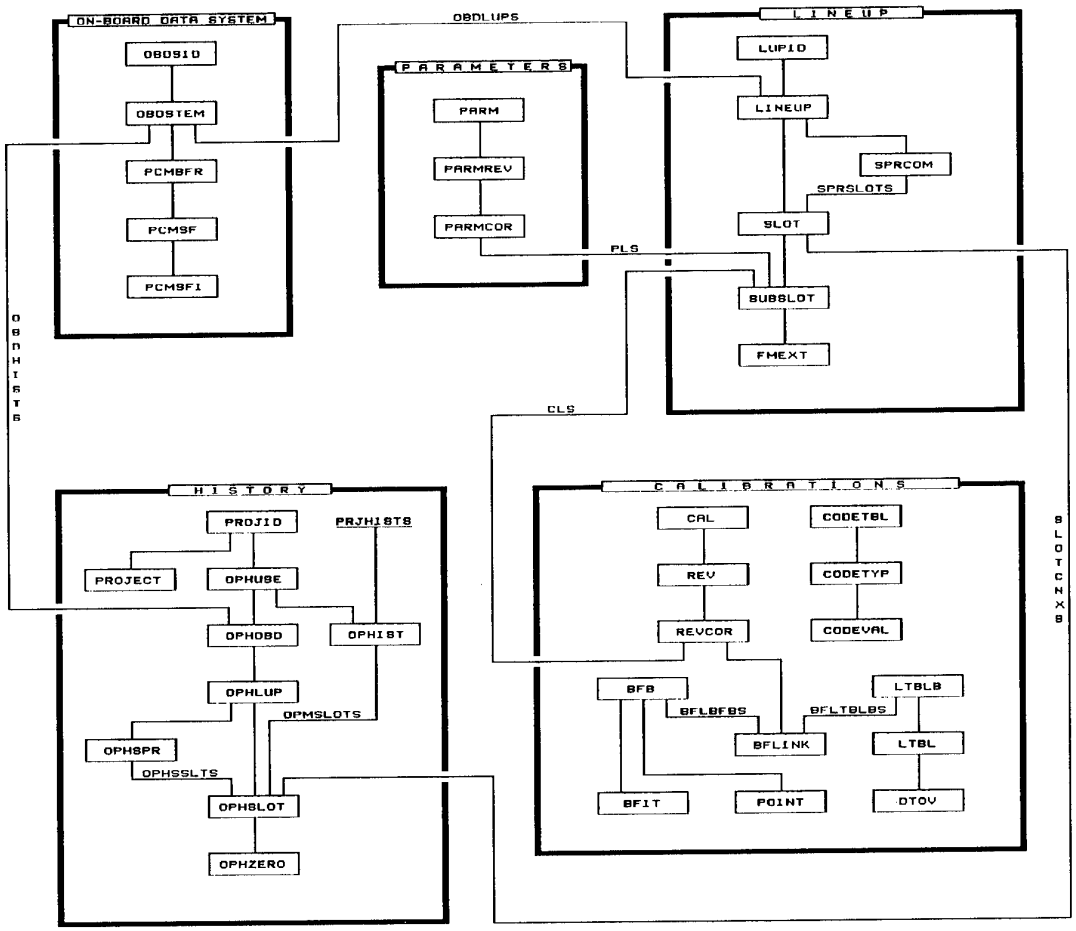

Figure A-1. Functional OPSDB.

General content

The OPSDB consists of five major data areas. These areas and their content are

(1) calibrations (CALS) – contains information to enable the EU conversion of measured parameters (that is, equation coefficients and lookup tables),

(2) parameters (PARMS) – contains information describing a parameter measured by a DAS,

(3) onboard data systems (OBDS) – contains information describing a DAS that can be used to set up ground station equipment and is used to construct a dummy lineup,

(4) lineups – describes each channel, or slot, in a lineup ordered by frame word position and frame number, and

(5) history (HIST) – contains information relevant to each project that uses the calibrations and parameters defined in an occurrence of the OPSDB, and maintains a reduced version of each lineup as it existed when used for operational support.

The OPSDBs are generally created on a one-for-one basis with respect to the projects they support. However, one OPSDB can support multiple projects when those projects are conducted using the same test vehicle and drawing on essentially the same parametric and calibration specifications.

Calibrations and parameters are collected in "pools" and are available to one or more projects sharing a single database. Calibration and parametric information need not be project specific for multiple projects conducted on the same test vehicle.

The OBDS, lineup, and history information is project specific. For projects using the same test vehicle, these types of information are collected in hierarchical sets beginning with records identifying and separating projects within each of these areas. The OBDS, lineup, and history information is related to specific projects through the OBDSID, LUPID, and PROJID records, respectively.

Interpreting the OPSDB diagram

Each of the data area blocks in the OPSDB diagram contains a group of labeled blocks which represent names of data records that appear in that data area, or area. Lines connect the blocks in a hierarchical manner. Records are collected in named sets, with a set of records belonging to, or owned by, the record appearing above it in a hierarchy. Records at the top of the hierarchy also occur in named sets but are considered owned by the system (the DBMS). Note that some records in an area (for example, LINEUP) own more than one type of record set (for example, the LINEUP record can own both SLOT and SPRCOM records), while other records occur in more than one set (for example, the SLOT record can occur in sets owned by both LINEUP and SPRCOM records). [The diagram does not indicate the criteria used for storing records in specific sets (for example, access order of records within a set, sets in which a record automatically becomes a member as a result of storage, and sets to which a record must be connected before becoming a member of that set)].

Networking of the areas takes place where lines connect records between areas in a hierarchical manner. The networking hierarchy is interpreted in a top-down manner for records with lines extending from the underside of one record into the top side of a record in another area. Conversely, a bottom-up hierarchy is assumed for records with lines extending from their top sides into the undersides of records in another area.

The general set naming convention is that set names are the plural of the records names which occur in, or are members of, the set (for example, the REV record appearing in the CALS area is a member of the set REVS). When a record is a member of more than one set, the names of the set(s) other than those following the general naming convention appear on the hierarchical connecting line(s) between the subject record and any record(s) that may own a set in which the subject record can be a member. For example, the SLOT record in the LINEUP area belongs to the set SLOTS (owned by the LINEUP record), and may also belong to the set SPRSLOTS (owned by the record SPRCOM and identified on the hierarchical connecting line).

Note that PRJHISTS occurring in the HISTORY area is to be interpreted as a set name. The OPHIST records occurring as members of the PRJHISTS set are directly accessible as members of a system level set (that is, top of the hierarchy). This enables a more direct path to specific operation histories than when database entry is through the PROJID record.

Database definition and creation

The database portion of the OPSDB is defined using a text editor. The definition, or schema, conforms to specification guidelines associated with the DBMS being used. The schema is compiled and stored in a data dictionary. The information thus stored is used to generate a database consisting of files required for data storage and maintenance. The OPSDB is ready for data loading and maintenance activities once database generation is complete.

Data area structure and content

The OPSDB consists of five major data areas. This section describes the general structure and content of each area.

Calibration area

The calibration area supports calibrations, revisions to calibrations, and corrections to those revisions. This is done through three basic levels of record-set hierarchy (that is, CAL, REV, and REVCOR). Calibrations are identified numerically in the CAL record. Revisions and corrections are identified numerically also, and collected in sets owned by calibrations (CALs) and revisions (REVs), respectively. Additionally, each correction (REVCOR)

contains information common to all calibration [for example, EU name, number of bits in calibrated range, data type (offset binary, floating point, twos complement, ones complement, sign magnitude), calibration date, and time].

Next in the calibration hierarchy is the BFLINK record. The BFLINK record may indicate the EU conversion information in the form of equation coefficients has been generated from calibration data. Alternatively, the BFLINK record may indicate that calibration data reside in a lookup table for EU conversion purposes. A BFB record is created to which the BFLINK record is connected when equation coefficients are derived. For lookup tables, an LTBLB record is created to which the BFLINK record is connected.

Equation coefficients hierarchy

The BFB record is the top of the hierarchy for calibration data used to derive coefficients for EU conversions of raw test data. The BFB record contains overall information on the equation derived (for example, counts and EUs range, and extrapolated counts and EUs range). The BFB record also owns information sets composed of records that: (1) specify equation coefficients for segmented curves; and, (2) contain raw calibration data consisting of the point pairs (EU data as a function of counts) obtained from the calibration process.

The number of BFIT records is equal to the number of segments into which the calibrated points for an instrument are divided for coefficients derivation. A BFIT record contains minimum and maximum EU data values, minimum and maximum counts data values, number of coefficients derived, and coefficients for an individual segment. The BFIT records are ordered 1 through "n" with segments being defined and processed consecutively over the counts and EU ranges specified in the BFB record.

The number of POINT records is equal to the points measured during the calibration of an instrument. The point records contain counts and equivalent EU data with an ordering sequence the same as that used during the calibration process.

Lookup table hierarchy

The LTBLB record is the top of a hierarchy for lookup table information. The LTBLB record contains flags used to identify the type of information in the table and the number of input (raw data) values defined in the table. The lookup table being defined may be used for interpolation purposes. The primary use of lookup tables in the described OPSDB, however, is for the conversion of data values to ASCII strings. For example, a two-bit data measurement describing landing gear status may assume the following values

Binary data	Interpretation
00	Gear up
01	Gear down
10	Gear locked
11	In transit

There is one LTBL record for each input data value being defined. Each LTBL record contains the input data value to which its information applies, and the number of output values that may be associated with it. There is generally only one output value for each input value as in the previous landing gear status example. Some applications may require a list of outputs based on a single input, however. An example of this would be the identification of a group of parameters currently being sampled by a multiple or ganged scanivalve.

One or more DTOV records exist for each LTBL record. Each DTOV record contains an ASCII value to be associated with the input value specified in the owner LTBL record.

The REVCOR record can also be the owner of SUBSLOT record occurring in the LINEUP area. This association is discussed more thoroughly in the lineup area description.

An "information only" set of data is available in the CALs area (CODETBL–CODETYP–CODEVAL record series) to aid in the assignment and interpretation of codes required in the calibrations specification. The CODETBL record contains the name to be associated with a code word or group of bits. Each CODEVAL record defines a code as a numeric value and the ASCII data assigned to that value.

Parameters area

The parameters area supports parameters, revisions to parameters, and corrections to those revisions. This is done through three levels of record-set hierarchy (that is, PARM, PARMREV, and PARMCOR). Parameters are identified using ASCII values in the PARM record. Revisions and corrections are identified numerically and collected in sets owned by parameters (PARMs) and revisions (PARMREVs), respectively. Additionally, each correction (PARMCOR) contains information common to all parameters (for example, parameter definition, multiplexer information relevant to the parameter, accuracy requirements, alternate parameter name, reference parameter name(s), concatenation information, data compression algorithm identifications, and filtering information).

The PARMCOR record can also be the owner of SUBSLOT records occurring in the LINEUP area. This association is discussed more thoroughly in the lineup area description.

Onboard data system (OBDS) area

The OBDS area supports OBDS specifications. The hierarchy in the OBDS structure consists of a maximum of five record levels (that is, OBDSID, OBDSTEM, PCMBFR, PCMSF, and PCMSFI). An OBDSID record is constructed for a project when the first OBDS for that project is generated. Additional OBDS specifications for the project are created in that project's OBDS hierarchy. Information in the OBDSID record consists of a project identifier and flags word used for status indicators.

The remainder of the OBDS hierarchy is used to define features and characteristics of each DAS used by a project. The OBDSTEM records identify and separate OBDS specifications. Each OBDSTEM record numerically identifies an OBDS, designates the OBDS type (that is, PCM or FM/FM), and contains a revision number applicable to the remainder of the OBDS specification. Format count, status indicators, and accounting information are also included in the OBDSTEM record. The OBDSTEM record is at the bottom of the hierarchy for FM/FM systems.

The OBDSTEM records may own LINEUP records (in the lineup area) and OPHOBD records (in the history area). These associations are discussed in the lineup and history area descriptions.

For PCM systems, each format supported by an OBDS requires a PCMBFR record and PCMSF and PCMSFI records when subcoma exist. The PCMBFR records contain information specific to a particular OBDS (for example, TM frequency, bit rate, PCM receiver code, data polarity, frame size, word size, sync word information, data parity, and subcom count). Subcoms designated in the PCMBFR records are defined by information in PCMSF records [for example, subcom type, number of mainframe words occupied by the subcom (subframe count), synchronization scheme (for example, ID or recycle)]. The mainframe word positions (subframe locations) occupied by subcoms and subframe depths are specified in PCMSFI records.

Lineup area

The lineup area supports lineup specifications. Lineups are generated and initialized based on information from existing OBDS specifications. A LUPID record is constructed for a project when the first lineup for that project is generated. Additional lineups for the project are created in that project's lineup hierarchy. Information in the LUPID record consists of project identifier and a flags word for project related lineup status indicators.

The number of LINEUP records is equal to the format count specified by the OBDSTEM record whose hierarchy was used to generate the lineup(s). The LINEUP record is connected to the LUPID record for its project and to the OBDSTEM record in the generating OBDS hierarchy when a lineup is generated. The LINEUP–OBDSTEM connection links the lineup and the appropriate OBDS. The LINEUP records contain OBDS relevant information [for example, related OBDS type (that is, PCM or FM/FM), OBDS number, and OBDS revision number], accounting information, and status indicators.

The SPRCOM records accommodate two specialized instrumentation schemes: (1) supercommutated, or supercommed, data (parameters sampled multiple times in the mainframe); and, (2)scanivalve data. An SPRCOM record is created for each supercommed parameter and scanivalve appearing on an OBDS. The SPRCOM record supplies configuration information and serves as a collection point for SLOT records in the supercommutation or scanivalve scheme. The SPRCOM records contain information specific to a supercommutated parameter or scanivalve definition [for example, slot identifier from SLOT records, function (that is, supercom or scanivalve), frame word count used to satisfy function, frame word position of scanivalve data, frame word position of first in supercom, frame word sampling frequency of supercommed parameters, and function status flags)].

The SLOT records correspond to slots in the OBDS and are ordered by frame word position and frame number within a lineup. They contain sampling frequency location (frame word position and frame number), slot parameter count, and other control information. The SLOT records are connected to LINEUP records and, while connected, are considered active within the lineup. Those SLOT records taking part in supercommed data or scanivalve schemes will also be connected to the appropriate SPRCOM record. Inactive SLOT records within a lineup are disconnected from the LINEUP and SPRCOM record as necessary, but remain active within the OPSDB if connected to an OPHSLOT record in the history area.

A SLOT can hold a portion of a parameter (for example, a concatenated parameter spread over two or more slots), a single parameter, or multiple parameters (that is, discrete bits or bit combinations). The SUBSLOT records are created to define parameters, their calibrations, size, and locations within a slot. One or more SUBSLOT records occur in sets owned by SLOTs for those slots containing measured data destined for processing. A parameter identifier (for example, parameter name, revision, and correction numbers) is stored in the SUBSLOT record, as in any related calibration identifier (for example, calibration, revision, and correction numbers). The parameter and calibration identifiers are used to connect SUBSLOT records to the designated parameter and calibration information, thereby enabling rapid access of that information during operational support data builds.

The FMEXT records exist only for lineups defining FM/FM systems. Minimal use is made of SLOT and SUBSLOT records in the lineup hierarchy for FM/FM systems. Each channel on an FM/FM system is described by the contents of an FMEXT record [for example, channel ID, channel type (constant or proportional bandwidth), minimum and maximum EUs and deviation, parameter description, and status flags word].

History area

The history area supports project descriptions and history information on an operational basis. A PROJID record is constructed for a project when an OPSDB is created and when additional projects are added to that OPSDB. Information contained in the PROJID record consists of a project identifier and a flags word for project related lineup status indicators.

The PROJECT records contain information describing a project (for example, project start and completion dates, engineering personnel responsible for test data activities, and brief project description). One PROJECT record may be updated over the life of a project to show changes, or additional PROJECT records may be added as information changes to create an historical account of those changes.

The OPHUSE records are generated for the first group of lineup configurations held for operational support purposes, and later when differing lineup configurations are held (that is, different revisions of similar lineups or different lineup groupings). The OPHUSE records contain a count of the number of operations that use the associated configurations, date and time the configurations were initially held, identification of the user who performed the hold, and the number of OBDSs involved.

The OPHIST records are generated for operations made known to the OPSDB. Each OPHIST record is initially stored in the PRJHISTS set and then connected to an OPHUSE record. The OPHUSE record to which the OPHIST record is connected will already exist if the required configuration has been previously defined; only the "use counter" in the OPHUSE record is updated in addition to the record connection that is established. An OPHUSE record must be generated for OPHIST connection when new or modified lineup configurations are held.

The OPHOBD records identify the OBDSs used for operational support. This record contains OBDS number, OBDS revision number, and format count. It is connected to the OBDSTEM record in the OBDS area through which, hierarchically, additional OBDS information may be obtained.

The OPHLUP record is a copy of the LINEUP record (associated with the OBDS specified in the owner OPHOBD record) that existed when the lineup was held. One OPHLUP for each format of related OBDS will be written.

The OPHSPR records serve the same purpose in the history area as do SPRCOM records in the lineup area. The OPHSPR records are copies of the SPRCOM records from those lineups where supercoms or scanivalves exist.

The OPHSLOT records may be copies of corresponding SLOT records in the associated lineup, or may contain a subset of SLOT information. The function of OPHSLOT records is to define slots for a lineup as they exist at the time the lineup is held. This is accomplished by copying all, or a portion of, a lineup's SLOT records to the history area as OPHSLOT records. The copied OPHSLOT record is connected to the correct OPHLUP record and to an OPHSPR record if it measures supercommed or scanivalve data. The OPHSLOT record is then connected to the

progenitor SLOT to recover all parameters and their calibrations associated with the slot. As previously noted, SLOTs to which OPHSLOTs are connected may be removed from an active lineup but will remain in the lineup area of the OPSDB to enable the reconstruction of lineup configurations which are no longer current.

The OPHSLOT records connected to OPHIST records (as members of the OPMSLOTS set) are used to make post operative changes in a lineup (for example, redesignation of parameter and calibration specifications). This is done by creating an appropriate SLOT record in the lineup area and creating the corrected SUBSLOTs with links established to designated parameters (PLS) and calibrations (CLS). An OPHSLOT record is created based on the revised SLOT information and connected to the new SLOT. The OPHSLOT is also connected to the OPHIST record for the operation to which the change applies, but it is not connected to the OPHLUP or OPHSPR records. Lineup reconstructions applicable to "as flown" conditions are obtained through the normal hierarchy (OPHIST to OPHUSE–OPHOBD–OPHLUP–OPHSLOT). Corrected lineups are constructed in the same manner but use OPHSLOT information from an operation's OPMSLOTS set to replace corresponding OPHSLOT information in the original hierarchy.

Zero correction information is accommodated for post operative data processing activities through OPHZERO records owned by an OPHSLOT record. The OPHZERO record contains the name of the parameter to which zero correction information is to be applied and the zero correction information. A parameter specified in an OPHZERO record must be defined in a SUBSLOT owned by the SLOT to which the OPHZERO's owner OPHSLOT is connected. Zero correction information can exist globally for all operations using a specific configuration, or selectively through a post operative correction specification.

10.9 Bibliography

1 Aeronautical Radio Inc., "Mark 33 Digital Information Transfer System, DITS," ARINC-SPEC-429, ARINC Airlines Electronic Engineering Committee.

2 Code of Federal Regulations, Title 14, Aeronautics and Space. Part 23 Airworthiness Standards: Normal Utility, Acrobatic and Commuter category of airplanes. Part 25 Airworthiness Standards: Transport category airplanes.

3 IRIG Telemetry Standards, IRIG Standard 106-86, Secretariat, Range Commanders Council, U.S., Army White Sands Missile Range, NM, USA, May 1986 (revised Sept. 1988).

4 JAR, Joint Aviation Requirements, published by the Civil Aviation Authority, Print and Publications Services, Cheltenham, U.K.

5 Lyddane, G.H., "The Impact of Automation on Flight Test," Conference Paper Issue 19, Society of Automotive Engineers, Proceedings of the Aerospace Congress and Exposition, Warrendale, PA, Oct. 1982.

6 Mackall, Dale A., Marlin D. Pickett, Lawrence J. Schilling, and Charles A. Wagner, "The NASA Integrated Test Facility and its Impact on Flight Research," NASA TM-100418, 1988.

7 Maine, Richard E. and Kenneth W. Iliff, "Identification of Dynamic Systems—Applications to Aircraft, Part I: The Output Error Approach," AGARDograph 300, AGARD Flight Test Techniques Series, Vol. 3, 1986. (Contains 18-page bibliography on parameter identification subjects).

8 Manders, P.J.H.M., "The On-board Computer System for the Fokker F-29 Prototype Flight Tests," NLR MP 81034U, 1981.

9 MIL-STD-1553B, "Aircraft Internal Time Division Command, Response Multiplex Data Bus," 1978.

10 MIL-STD-1553B, G. Vitalone, E.T.C., "Decommutation Techniques and Their Integration into Post Flight Analysis Systems," 1987.

11 MIL-STD-1553B, "Multiplex Applications Handbook," U.S. Air Force Systems Command, 1982, (available from SCI Systems, Inc., Huntsville, AL, USA).

12 MIL-STD-1553B, S. Cattunai, E.T.C., "Acquisition and Recording on AMX A/C, Aeritalia Experience and Present Trends," 1987.

13 Murata, Hirosi, "Handbook of Optical Fibers and Cables," 1988.

14 Personick, S.D., "Fiber Optics: Technology and Applications," Plenum Publishers, 1985.

15 Posner, J.M. and R.A. Kitchen, "AFFTC Instrumentation System: An Introduction for Flight Test Engineers and Managers," Society of Flight Test Engineers, 18th Annual Symposium Society Proceedings, Lancaster, CA, USA, 1984, pp. 24.1–24.11.

16 "Principles and Components, Optical Fibers Sensors," J. Dakin and B. Culshaw, editors, published by Artech House, Vol. 1, 1988.

17 Schweikhart, W.G., "Flight Test Planning from the Bottom Up—An Alternative Approach to Flight Testing," *Cockpit* (ISSN 0742-1508), Jan–Mar 1985, pp. 5–14.

18 Strock, O.J., "Telemetry Computer Systems—the New Generation," published by the Instrument Society of America, 1988.

19 Tappan, M.W., T.C. Dull, C.A. Hughes, and G.M. Tadych, "Integration of Flight Test Data into a Real-Time Simulation," AIAA 84-0552, 22nd Aerospace Sciences Meeting, Reno, NV, USA, Jan. 1984.

20 van de Leijgraaf, R., W.A. van Dorp, S. Storm van Leeuwen, and R. Udo, "Measurement System for Production Flight Tests of New Aircraft," NLR TP 89222L, 1989.

21 van Doorn, J.T.M, P.J.H.M. Manders, O. van Teunenbroek, H. Riebeek, and A. Voskes, "MRVS-System for Measuring, Recording and Processing of Flight Test Data," NLR MP 88034U, 1988.

22 van Nunen, J.W.G. and G. Piazzoli, "Aeroelastic Flight Test Techniques and Instrumentation," AGARD Flight Test Instrumentation Series, AGARDograph 160, Vol. 9, 1979.

Chapter 11

ONBOARD DATA RECORDING SYSTEMS

by

L. A. Whalley
Flight Test Instrumentation Department
British Aerospace Defence
Military Aircraft Division
Warton Aerodrome
Preston, Lancs. PR4 1AX
United Kingdom

C. J. Brain
Aircraft & Armament
Experimental Establishment
Instrumentation Section
A&AEE Boscombe Down
Salisbury, Wiltshire SP4 0JF
United Kingdom

Rex Grant
SPARTA, Inc.
43210 Gingham Avenue, 221
Lancaster, CA 93535
United States

11.1 INTRODUCTION

In general, data obtained onboard an aircraft during flight test operations are delivered to the users and analysts in one of three ways: real-time data transmission from the aircraft to the ground facility through the use of down-link telemetry with redundant onboard recording, by the use of onboard recorded data which is hand-carried to the ground facility after landing, and by real-time data transmission to the ground facility without any onboard recording of any kind. It is the intent of this chapter to address the first two considerations which involve onboard recording systems.

The need for onboard recording has arisen from the advancing complexity of aircraft structures, systems, engines, and the flight test engineers insatiable demands for more information to validate flight performance during prototype development, trend characterisation and condition monitoring during production service.

The developing requirement to study trend characteristics such as "in-service" structure and engine fatigue analysis and maintenance data recording has been justified by economic and safety benefits. To satisfy these requirements efficiently, low cost, reliable data acquisition and recording systems are necessary. These systems will be operated in a production or in-service environment as opposed to the flight test instrumentation used in a development aircraft environment only.

11.2 CRITERIA FOR THE SELECTION OF THE RECORDING SYSTEM

The optimum choice of an onboard recording system for the aircraft flight test program is determined by a wide range of factors. Generally, these factors are: environmental considerations, the type of data to be recorded, the data rate, required data record time, program duration and economics, and weight/size form factor constraints of the record system hardware.

11.3 THE MAJOR TYPES OF RECORDING SYSTEMS

In general onboard data gathering can be viewed as existing of two types: the first is data that must be "observed" so that continuous measurement analysis can be made of the occurrence. This is done through the process of the ciné/pulsed camera and video. The second type of data is electrical in nature and is generated by an analogue or digital transducer. It is interesting to note that over the years these two types of data have evolved into data outputs suitable for magnetic tape recording, thus, in some respects simplifying the onboard complexity of recorder type instruments. Accordingly, it will be noted that the bulk of this chapter is devoted to the intricacies of the magnetic tape recorder.

Historical perspective

The early flight testing of aircraft relied upon the pilots' five senses as data sensors, his knowledge and experience for real-time analysis and his memory to store data for post-flight analysis.

Because of the limitations in human observation and memory, pilots' aids quickly grew from thigh-strapped note pads to the use of dedicated transducers and automatic methods as listed here:

Photo panel recorders/ciné cameras	circa 1930
Continuous trace recorders	circa 1940
Analogue magnetic recorders	circa 1950
Digital magnetic recorders	circa 1960
Video magnetic recorders	circa 1975
Solid-state recorders	circa 1985

All of these methods are in current use, justified by a combination of economics, technical performance, and lead-time available.

11.3.1 The photo panel

The use of a specially designed enclosure to create ideal lighting conditions for the use of photographing a group of "pointer type instruments" was still in use until the late 1960's. As with most data gathering techniques the concept was developed to a very high degree of refinement.

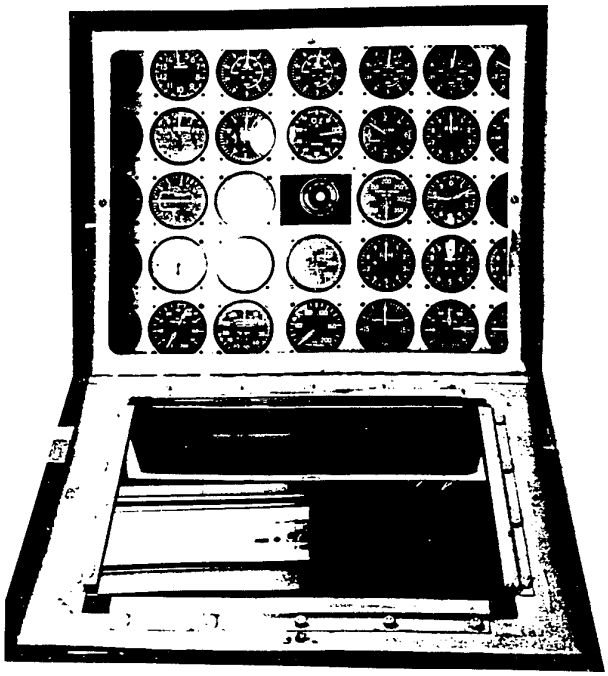

Figure 11.1. Typical photo panel.

Figure 11.1 illustrates one type of photo panel commonly used. A panel of sufficient size to accommodate the required number of panel indicators of various display functions is housed in an appropriate cabinet and illuminated sufficiently to support photographing with a 35-mm movie camera modified to provide the desired number of frames per minute. In this figure a mirror arrangement is employed to reduce the space requirements.

As shown in the figure the instruments are reflected in a mirror and when photographed will appear reversed. Some sophisticated systems actually manufactured instruments that worked in reverse (with reverse numbering) so when photographed they appeared to be "normal" when reflected and viewed on film. The figure also shows the problem of light reflection from the instrument glass. This problem was alleviated when nonglare spray and

eventually nonglare glass was developed. Data analysis was labor intensive and archival storage required considerable space as well as environmental considerations (Ref. 11.1).

11.3.2 The film camera, pulsed and ciné

The use of the film camera has long endured and is still considered a part of today's instrumentation inventory. However, it is slowly being replaced by the video technology.

Some examples of current applications are:

- Stores carriage, launch, and jettison
- Stores trajectory tracking
- Chaff dispenser dispersion patterns
- Gun cartridge ejection
- Chase aircraft observation
- Reconnaissance system performance with large format film
- Air flow over wool tufts
- Ice accretion

Frame rates and duration

Dependent upon the rate of movement on the image, the accuracy required from the analysis and the test duration, a suitable frame rate and film capacity can be chosen.

Typical cameras provide frame rates pulsed at intervals determined by an intervalometer or ciné rates from 5 frames per second (fps) to 500 fps. Duration from several hours of recording, to less than a minute are available with 16-mm film and a 200-ft magazine.

Lenses

A variety of lenses are available, selection involves consideration of object distance, field of view, acceptable distortion, and ability to accept automatic exposure controls, e.g., linear iris control.

Shutter speeds

Current generation of medium speed cameras (5–500 fps) use rotary shutters that are specified in degrees of arc such that the shutter speed is a function of frame rate, e.g., 160° shutter at 16 fps gives 28-msec exposure or a 9° shutter at 500 fps provides 50 μsec.

Film type

Medium and medium-high speed airborne ciné cameras mostly use 16-mm colour film. Larger formats are not generally desirable because of the bulk and power requirements.

For particular applications such as reconnaissance testing larger formats (typically 70 mm) at relatively low speeds (up to 12 fps) are used. Infrared film is also available for ground thermal imaging.

Film developing

The bulk of film development is now automated, there being specific machines for each film process. The processing speed is fixed typically at 35 ft/min for 16-mm Electroframe process and 6 ft/min for 70-mm FP4 monochrome film.

Power

Most pulse/ciné cameras place a very heavy demand on aircraft power supplies.

Some factors to be considered are:

- Camera/film heater requirements
- Blower requirements to maintain a "nonfoggy" lens

- Surge currents during start-up and pulsed operation
- EMC, line filters, separate routing of cables, separation of power/signal/grounding references
- Maintain short power supply cable runs

Control

Multi-camera systems may require pilot control to provide start-up and stopping of groups of cameras and may require indicator lamps depicting camera/film status.

Time correlation

Instrumentation camera design incorporates a frame synchronization capability whereby an intervalometer or master clock controls the instant of frame exposure. An interesting use of pulse synchronization (phase locking) is the 100% coverage of an event by using 3 cameras having 120° shutters driven in a phase lock mode 120° out of phase with each other.

Analysis

Film viewers are available for frame-by-frame analysis as are tele-ciné systems that have the advantage of allowing computer assisted trajectory analysis (Ref. 11.2)

Development

Although wet film with ciné photography is still superior to video in resolution of the image and the range of film speeds available . . . both of these advantages are gradually being overtaken by video techniques in specialized applications.

Onboard recording of visual imagery shows an advantage for the replacement of ciné photography with magnetic tape video recording. Some of these advantages are:

- Real time and/or immediate post-flight viewing thus avoiding the processing delay of wet film. Video cameras permit onboard display or transmission to a ground facility for display, recording and real-time analysis.
- Smaller installation volume is required for video cameras permitting more remote installation separation of camera "head" and electronics.
- Video cameras do not require access in the way that ciné cameras do for film magazine changing.
- Power requirements for video cameras and video tape recorder (VTR) systems are less.
- The VTR data are more compatible with computer data processing for analysis than film.

11.3.3 Trace recorders

Trace recorders (oscillographs) provide an economical means of recording a relatively small amount of data to a modest accuracy.

Pen or photographic (light beam), trace records provide a 'time history' by the continuous scribing of a line along a strip/roll of paper or film with the lateral excursion of the line being proportional to the amplitude of the signal. A time base normally generated by an internal clock mechanism may be projected onto the edge of the paper with the photographic recorder or inscribed by pen.

The paper/film feed speed and the photographic emulsion speed of the film or paper is chosen to delineate an input signal in time and amplitude in a readable manner, compromised only by the duration of recording.

The main attribute of continuous trace recording, is to provide an easily understood time history of amplitude variation or a signal which can quickly be compared with other parameters recorded at the same time. If several recorders are used in a system a common time base is usually used.

Trace recorders suffer from a limitation in the number of channels that can be discerned on a multi-trace recording of large amplitude signals. Identification can be difficult even though trace identifiers/trace interrupts or colour have been used.

The earlier photographic paper and films required post-flight developing which delayed the analysis, later types of ultra-violet sensitivity paper alleviated the delay and could be used in larger aircraft. Some types of recorders also used a "real-time" developer take-up magazine which unfortunately was prone to clogging during the developing of the emulsion.

The photographic elements or pens also suffer from acceleration sensitivity particularly those electro-magnetic elements responding to micro-ampere signals. The more robust elements generally required large current signals to provide sufficient deflections of a 'stiff' suspension.

These electro-magnetic elements could generally be characterized by a 2nd order differential equation where the damping term is provided by the electro-magnetic coil or moving iron galvanometer, each having a mirror attached to the suspension. The mirrors reflect the light source onto a slit past which the paper/film traverse at a constant speed. See Chapter 4.4.2.

Typical features of a photographic trace recorder are:

Accuracy:	0.5 to 3% of full-scale deflection, the finer accuracy being achieved by coarse/fine multi-mirror devices particularly used for airspeed and altitude.
Bandwidth	Usually of the order to 70 Hz but stiffer suspension galvanometers are available for several kHz recording.
Data channels	36 or 50 traces.
Physical size	13 in. high/15 in. wide/27 in. long, 145 lb (with 250-ft magazine).
Magazine size	250-ft paper or film.
Paper size	12-in. wide paper/film.
Record speed	16 speeds from 0.1 to 100 in/sec.
Power	Either 26 V dc or 115 V ac.
Timing	Timing lines at 0.01-sec intervals.
Magnet blocks	Two, thermostatically heated.

It is interesting to note that the record time of low-frequency data signals can still be best achieved by a trace recorder. The NACA-designed Airspeed, Acceleration, Altitude Recorder, circa 1940 was still being used up into the 1970's. Its advantage was a 200-ft long roll of recording film with a speed of 2 ft/hr.

Airspeed	0 to 350 mph
Acceleration	–2 to +4 g
Altitude	0 to 30,000 ft

Overall weight was 20 lb, including acceleration transducer. Power requirement was 24 V, dc, 1 amp (Ref. 11.3).

11.3.4 Evolution of magnetic recording

The traditional systems using magnetically coated tape, heads, and longitudinal magnetization have dominated since the late 1940's. The first major application was for audio recording which was founded on linear analog methods based on ac biasing. Many instrumentation applications have also used ac bias. The requirements for providing high signal-to-noise ratios while increasing recording densities have kept instrumentation applications at the leading edge of high-density magnetic recording technology.

Extensions of tape recording to the storage of digital data were developed using unbiased nonlinear recording (Ref. 11.4). New tape devices were required to operate at high tape speeds and provide fast access to stored data. Even after 40 years, tape drive systems continue to be the primary removable storage technology for digital data. Attempts to extend stationary-head tape machines to video recording failed because they required excessive tape speed to record the very high frequencies involved. This problem was solved in 1956 with the

introduction of the scanning-head machine. This major innovation was initially applied to video recording using high-speed transverse scanning of a slow moving tape. Subsequent evolution of helical scanning techniques expanded the application to lower cost drives and resulted in a world-wide acceptance of video recording.

Another significant development was the introduction of the rotating rigid disk in 1957 for digital storage of data. This rigid disk innovation has become the ubiquitous "diskette" used by every personal computer.

The combination of higher linear density, greater head-medium velocity, and multi-track recording has provided an increase in the upper limit of recording bandwidth of 9 orders of magnitude over the last 35 years. Progress in providing faster access to the stored data has also been impressive, particularly in rigid-disk systems. Further improvements in accessing by providing more heads, for example, a head per track on a disk, are no longer competitive with low-cost large-scale integration (LSI) electronic memories. Magnetic bubble stores are superior in access speed to fixed-head disk files but, in general, are also not cost-performance competitive with LSI memory. The combination of high-performance memory and moderate-performance direct access disk storage is preferred for on-line data storage.

Some of the difficult challenges for heads and media are circumvented in the emerging optical-beam storage technology (Ref. 11.5). Laser beam writing and reading on magnetic media provides a significant improvement in narrow-track operation.

11.3.5 Instrumentation recording

Instrumentation recording covers the broad field of data recording in which analog or encoded information is stored in other than standard audio, video, or computer formats. In the United States the practice was initiated in the early 1950's when flight test programs required capacities and rates beyond those possible with oscillographic recorders, and the national security effort required ever-increasing surveillance bandwidths. The earliest instrumentation recorders were adapted from professional audio machines to accommodate frequency modulation (FM) and other higher-than-audio-frequency electronics. The bandwidth of the audio reproducing heads was increased by replacing the center conductor of the coaxial head cables with fine piano wire, thereby reducing the parallel capacity and raising the resonant frequency. After a time, the audio equipment manufacturers developed recorders specifically for the requirements of the instrumentation users, and standards evolved such as those of the Inter-Range Instrumentation Group (IRIG) (Ref. 11.6).

Although some instrumentation recording is done on disks, (floppies and optical) the dominant formats at this time still utilize tapes. Fixed-head recorders are usually multi-track and use wide tapes, typically 1 in., although some are as wide as 2 in.

Rotary head machines allow the highest packaging density and are now primarily of the helical-scan configuration. Early rotary-head machines for wide bandwidth analog signals were adapted from transverse-scan broadcast video recorders, with signal processing to provide time alignment of the signal overlap where it was interrupted at the end of one headscan and the beginning of another. Rotary-head machines today use high density digital recording and the interruption is easily accommodated by digital buffering.

Various modes of recording are used for instrumentation, depending upon the type of data accessed. Pulse code modulation (PCM) is probably the dominant technique for telemetry, satellite downlink, and laboratory type measurements, in many cases replacing FM recording.

Instrumentation recorders differ from other recorders in a number of ways, particularly in the method of optimizing the record current and in equalizing the reproduced signals. In analog machines, the record head and reproduce head are separate and each is optimized for its function. The value of the ac bias is optimized at band edge, the highest signal frequency of interest, to obtain the maximum bandwidth. Bulk erasure is commonly used in instrumentation recording since the necessity for overwriting is seldom used. Linear densities up to 3000 frames/mm (wavelength of 0.67 μm) are achieved with partial penetration recording of the relatively thick magnetic tape coating. Small record gaps of fractions of a micron create little phase shift during the record process and are increasingly being used as their advantages become better understood. Tape speeds can be very high with multi-track recorders having the capability of storing data at gigabits per second. Burst-efficient error-detection and -correction codes such as the Reed-Solomon code, are used to correct errors down to 10^{-12}.

11.3.5.1 System components

All magnetic recorder/reproducer systems consist of five essential elements:

1. Fixed magnetic heads
2. Magnetic tape
3. Tape transport
4. Record amplifier
5. Reproduce amplifier

The fixed magnetic head

The fixed magnetic head may be divided into three categories:

- record head
- reproduce head
- erase head

The record head

The function of the record head is to change the current produced by the record amplifier into magnetic flux. As record current varies, so also will the magnetic flux. The change will be affected by both the amplitude and the direction changes of the record current. The changing current through the head produces a proportional changing magnetic force in the head. The magnetic force in turn produces magnetic flux in the tape. As may be expected there are some losses to be considered in the conversion process. These are (1) the hysteresis effect of the head and tape materials, (2) eddy-current losses in the record head, and (3) partial demagnetization. Accordingly, there will always be less magnetic flux left in the tape than was originally produced by the magnetic force.

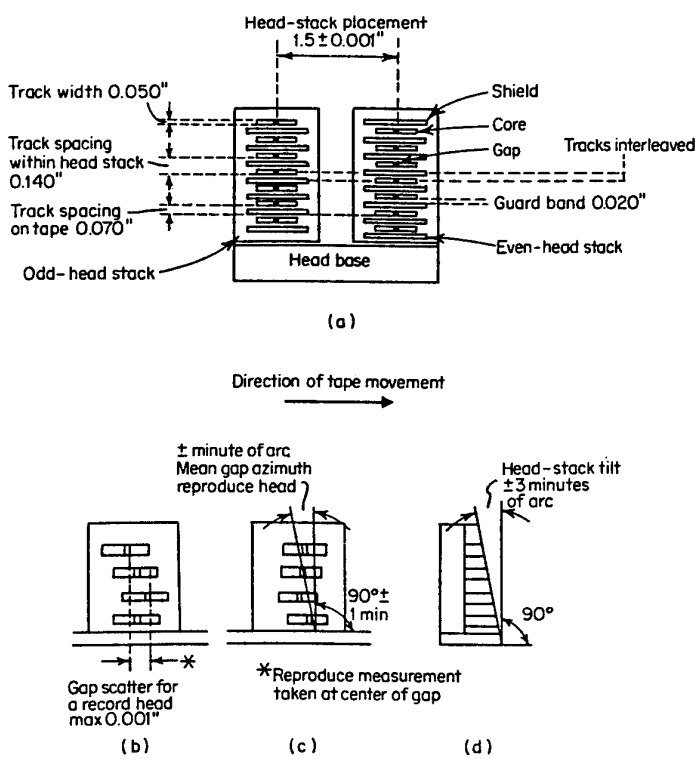

Figure 11.2. Instrumentation head-stack parameters.

Figure 11.2 illustrates some of the head stack parameters for instrumentation recorders. Figure 11.2(a) shows that the heads are not in line, but are mounted so that the heads in the odd stack are opposite the shields of the even stack (and vice versa). This type of head construction is called interleaving. It permits the heads to be

spaced farther apart in the individual stacks. In this way crosstalk is reduced. Standard instrumentation longitudinal heads contain 50-mil tracks spaced 140 mils apart, thus track spacing on the tape will be 70 mils.

Some of the other head-stack parameters are gap scatter, gap azimuth, and head-stack tilt. These are shown in Figure 11.2(b), (c), and (d).

Gap scatter is defined as the distance between two parallel lines that enclose the trailing edge of the record-head gaps or the center lines of the reproduce-head gaps, between which all the gap edges or centerlines fall. It can be seen from Figure 11.2(b) that if a number of data signals were recorded simultaneously, some signals would be physically positioned on the tape ahead of others. Thus resulting in timing errors in the data signals upon reproduction since the time correlation would be incorrect.

In Figure 11.2(c), if all the center lines of the reproduce heads are not perpendicular to the movement of tape, signals which were recorded simultaneously on magnetic tape would be reproduced with a time difference. Wideband heads are fitted with azimuth-adjustment screws that are used to compensate for this type of error. Figure 11.2(d) shows the amount of forward or backward tilt permitted in any instrumentation head. This parameter is controlled during the manufacturing process.

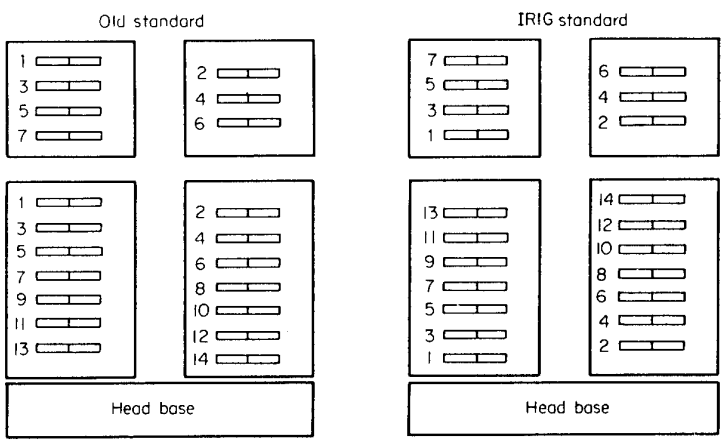

Figure 11.3. Instrumentation head-numbering systems.

Figure 11.3 shows the two instrumentation head-numbering systems in general use. Until about 1962, heads using the old standard numbering system were in use. Today, the IRIG Standard numbering system is used. It is obvious from the two different numbering patterns that some confusion could exist.

The reproduce head

The basic function of the reproduce head is to change the magnetic field pattern found in the magnetic tape into a voltage. The reproduce head acts as a miniature generator following Faraday's law. The voltage created in the reproduce head "approximates" a 6-dB/octave curve. That is, as the frequency doubles, so will the value of voltage output from the head. Thus, if a constant level of input were fed to the reproduce amplifier at increasing frequencies, the output of the reproduce head would not be constant, but would increase at a 6-dB/octave rate. The approximation is caused by losses associated with head construction, magnetic tape characteristics, the speed of tape movement, and other factors (Ref. 11.7). It is sufficient to state that most of the correction needed to "straighten out" the reproduce curve to one comparable with the record curve will be done by circuits called equalizers, which are mounted in the reproduce heads.

The erase head

The purpose of an erase head is to demagnetize the magnetic signal on tape. A very high-frequency alternating current (100 mA or more) is fed through the head. This current drives the tape into saturation first in one direction and then in the other. As the tape is pulled away from the head, a slowly diminishing cyclic field is presented to the tape. This field leaves the magnetic vectors on the tape in a completely random state, resulting in demagnetizing or degaussing of the tape. The erase head is usually not a part of the instrumentation tape

transport although some high-density digital recording machines show excellent overwrite capabilities. The complication arises when the leakage field from unerased portions of tape is anhysterectically (magnetization that occurs without hystereis effects) recorded by the decaying field from the erase head. This re-recording effect can cause some major undulations in a partially erased signal spectrum (Ref. 11.8). The use of double-gapped erase heads and a sufficiently high erase field is the practical solution.

Magnetic tape

In general, the medium for magnetic recording is a tape consisting of a backing coated with particles of the gamma form of ferric oxide. The backing material, an acetate or polyester film, provides the base to which the magnetic particles are fixed with a resin binder. Each particle forms an elemental magnet. The north and south poles of these magnets lie along some axis of the iron oxide crystal lattice, which axis depends upon the crystalline structure of the oxide used. There will be specific types of oxides used for specific bandwidths of data signals and types of recording techniques, i.e., analog, digital, and video.

Like the heads, magnetic tape has often been taken for granted. Yet, the manufacturing processes of magnetic tape are full of contradictions. Many of the design considerations appear to be in direct conflict with each other. For example, magnetic tape should be strong and pliable. Strength is generally associated with thickness and stiffness and pliability is associated with thinness and limpness. In order for magnetic tape to have high recording (and reproduce) resolution, the magnetic particles should be in intimate contact with the head. For good headwear, however, the magnetic particles which are extremely abrasive should not contact the head. In order to have a high signal-to-noise ratio, the tape should have as many magnetic particles per unit volume as possible (high density); whereas, to have good pliability the tape should have few magnetic particles per unit volume. These conflicts tend to explain why many of the techniques and materials used by the tape manufacturers are classed as proprietary.

The tape transport

The tape transport must move tape across the record and reproduce heads at a constant linear velocity, with the least amount of disturbance to tape motion. It must also provide some means of tape storage, either in a form of loop, bin, reel, magazine, or cassette. If speed or tension of tape varies, dynamic time-base errors will be introduced into the system. These will adversely affect the amplitude, phase, and frequency response of the magnetic recorder.

The design of the tape transport is directed toward instantaneous and long term speed control of the magnetic tape. Instantaneous tape-speed errors (flutter and wow) and long term errors (drift) are introduced by inaccuracies of the drive system and are usually expressed as percentage variations from absolute selected speed.

In general, eight criteria should be followed when selecting a tape transport mechanism:

1. Cost: does it fit the budget?
2. Performance: will it record (and reproduce) without error?
3. Bandwidth: is there sufficient bandwidth for the data?
4. Reliability: will it perform for reasonable periods without failure?
5. Compatibility: is it compatible with existing systems?
6. Standardization: Is it an industry standard? Are spares, tapes, and cassettes readily available? Does it have standard speeds, tape widths, reel, and cassette sizes?
7. Flexibility: can it be expanded, modified, or upgraded?
8. Maintenance: what level of expertise is required?

Transport components

The baseplate assembly

In order to move the magnetic tape across the heads at exactly the right angle, the components that are used to guide the tape and mount the head assemblies must be referenced to some form of precision surface. In general it is provided by a precision ground plate or a series of reference points established by milling and/or grinding. This provides for easy interchangeability of tapes between machines without introducing guiding errors.

Some of the components that are mounted on the baseplate are the capstan assembly, pinch-roller assembly, turnaround idlers, tape guides, and magnetic heads. Where zero-loop and optimum-loop drive systems are used, pinch rollers and turnaround idlers are not included in the tape path.

Longitudinal drive systems

The most common types of drive systems used to move the magnetic tape recording medium across the heads are the open-, closed-, optimum-, and zero-loop drive systems, as well as the rotating-head (transverse-scan), helical scan, and disc-recorder drive systems.

Each of these drive systems is used in one or more of the audio, video, instrumentation, or digital recording fields. Each has its advantage and disadvantage.

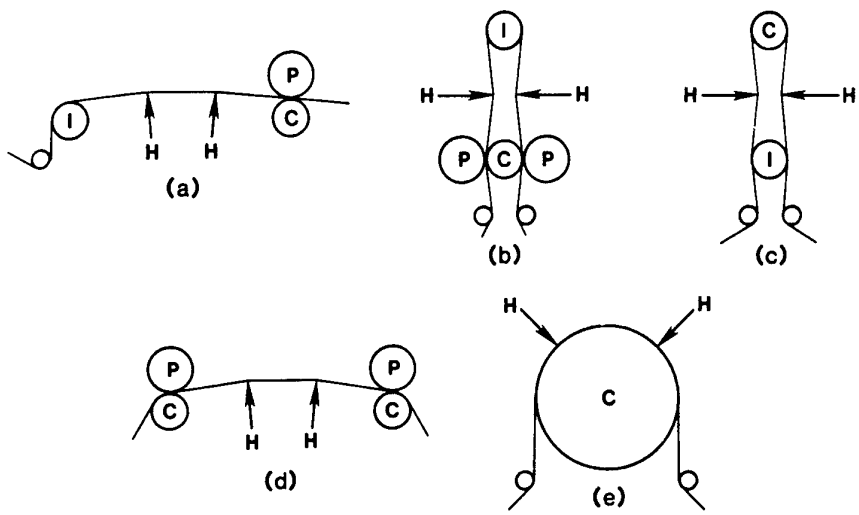

Figure 11.4. Common tape-drive configurations.

H = head, C = capstan, I = idler, P = pinch roller.

The professional audio configuration of Figure 3.4(a) isolates the head from the take-up reel disturbances, but the tension variations from the supply reel are magnified since the tension at the input to the capstan is increased by the wrap around the heads. The friction at the head-tape interfaces increases the tape tension over a combined head-wrap surface area. For typical wrap angles of 10° per head and a friction coefficient of 0.2, the input-reel tension disturbances are increased by about 15% across the head stack.

Figure 11.4(b) shows the closed-loop approach developed as an attempt to isolate the heads from reel disturbances by clamping the tape to the capstan surface by two pinch rollers. Variations of this approach used a stepped capstan and pinch rollers to establish a fixed-tension differential.

Figure 11.4(c) has no pinch rollers since the capstan has a large wrap angle. The free idler is coated with a high-friction layer so that there is no slippage between it and the tape after the tape is up-to-speed.

Figure 11.4(d) shows a two-capstan drive with differential speed between the two capstans to maintain tension at the heads. Usually, pinch rollers are used to prevent tape slippage. Figure 11.4(e) shows a typical capstan arrangement designed to permit high-speed servoing of the tape speed for time-base error correction. Various devices for achieving compliance have been interposed between the capstan-head region and the reels, including vacuum columns and moving arms. Often, the reel speed is servoed from compliance structure to maintain constant tape tension.

Handling open-reel tapes

Many magnetic tape problems can be avoided if the user follows a few simple guidelines: do not rewind the tape after recording or replay and store it immediately in its container, standing on edge. Many tape failures and dropouts are a result of not following these practices. When winding or rewinding a tape, the recorder may produce an uneven "wind" with protruding layers which are subject to damage in handling. By holding the reel the flanges are quite often squeezed against the tape and protruding layers may be nicked, torn, or permanently deformed.

A transport winding mechanism may also wind the tape without sufficient tension. Later handling will then cause the pack to shift from side to side against the flanges leading to tape edge damage. A loose pack is also subject to tangential slippage between layers, called cinching. Cinching is likely to occur in a reel of tape with one or more regions of too low tension, especially if subjected to a rapid angular acceleration or deceleration which occurs during starting and stopping of a tape handler. During such slippage the tape may actually fold over on itself so that permanent creases form immediately or perhaps later when tension is applied and the tape attempts to return to its original position. Creases cause dropouts by introducing a separation between tape and heads.

For storage of tape the following is suggested:

- Tape should always be stored in its container with the reel on edge rather than in a flat position. This will tend to eliminate the sideways shifting of the pack up against the flanges.
- Tape should be stored under controlled environment conditions. It is desirable to maintain temperature between 40 and 90 °F and the relative humidity between 20 and 80%. In addition, sudden changes in this environment should be avoided.
- Tape which has been stored under less than ideal environmental conditions should be conditioned by allowing it to remain in a suitable environment for at least 24 hours prior to use.
- When large changes in temperature cannot be avoided, the probability of damage to the tape can be minimized if the reel hub has a thermal coefficient of expansion similar to that of the base film. Most plastic reels have a thermal coefficient about twice that of the polyester base film, while the thermal coefficient of aluminum is nearly equal to that of polyester.

The record amplifier

The record amplifier must change the incoming data signal into a form that is suitable for recording on magnetic tape. That is, the amplifier must change the incoming data signal voltage into a current which, when fed to the magnetic heads, will be converted into magnetic flux. The magnetic flux will be used to magnetize the tape so that a given amplitude, a given polarity, a given point on the tape represents the data signal voltage at a given instant of time.

Direct recording

The direct record amplifier will produce current that is analogous to the frequency and amplitude of the incoming ac data signal (the exception to this being the audio record amplifier, where pre-emphasis is added to increase the low- and high-frequency current so that when the tape is reproduced, the sound is more compatible to the human ear which is nonlinear).

Bias must be added to the record signal to place it in the linear portion of the magnetic tape response curve. Both ac and dc bias are used with audio recorders, but in almost all cases ac bias only is used with instrumentation and video recorders. Direct recording uses the maximum bandwidth capability of the recorder and tape, but is limited in low-frequency response due to the reproduction losses that cannot be compensated for.

Frequency-modulation recording (FM)

The function of the FM record amplifier (FM modulator) is to convert the input data into a series of frequencies (carriers and sidebands). A particular frequency is selected as the center (carrier) frequency corresponding to a zero data input signal. A +dc signal will deviate the carrier frequency a given percentage in one direction, while a –dc signal will deviate the carrier frequency a given percentage in the opposite direction. An ac signal will deviate the carrier alternately on both sides of the center frequency at a rate equal to the frequency of the input signal. The amount of deviation is controlled by the amplitude of the input signal, while the rate of deviation is controlled by the frequency of the deviating signal.

Pulse-type record amplifiers

Recording processes that use coding techniques are somewhat different from direct and FM recording. In these systems the pulse-type amplifiers produce pulses of current or frequencies that are used to designate one of two binary states, 1 or 0, or the beginning and end of a pulse of definite length.

Some of the pulse type record amplifiers used are:

1. Frequency-shift modulation (FSM)
2. Pulse-duration modulation (PDM)
3. Time-sharing modulation (TSM)
4. Nonreturn-to-zero (NRZ) digital
5. Return-to-zero (RZ) digital
6. Pulse-code modulation (PCM)

Digital data and direct recording combine to make up an indispensable technology within the fields of instrumentation and video recording. Digital recording provides the ultimate in signal-to-noise ratio, accuracy of signal waveforms and freedom from tape transport flutter.

The criteria for digital recording is not a larger dynamic range and linearity, but the ability to distinguish between recorded pulses. The NRZ/RZ systems are basic to digital recording.

Rather than recording and reproducing a signal that continuously varies in amplitude and duration (analog), the signal is changed in an "analog-to-digital" (A/D) converter so that the record signal has discrete levels only. The output signal from an A/D converter is, by definition of digital logic circuitry, a PCM signal (pulse code modulation) in the NRZ format (nonreturn-to-zero). This implies that all "1"s are high voltage and all "0"s at a zero voltage. This NRZ signal contains a strong dc-component and it is partly or completely removed by recoding the signal by using such codes as the Miller or Miller-squared (Ampex), Enhanced NRZ (Bell & Howell), NRZI (Honeywell) and Randomized NRZ (Sangamo-Schlumberger).

PCM recording has several advantages over analog and FM recording-playback:

- High degree of linearity.
- Theoretical limitless signal-to-noise ratio.
- Immunity against data degradation due to changes in the overall tape flux level which occur after repeated playback passes or duplication.
- Errors caused by single drop-outs can often be corrected.
- Immunity against crosstalk.
- Excellent phase and transient response.
- Complete removal of flutter by clocking the PCM data out of the buffers.
- Computer compatible format.
- Few operational adjustments.

These advantages however, have a penalty. High-density digital recording (HDDR) often exceeds the bandwidth of existing instrumentation recorders. The problem is solved by converting the serial bit stream into parallel streams and the number of tracks required can be determined once the bit rate per channel has been determined.

The reproduce amplifier

The reproduce amplifier should provide an output that is the same as or similar to that fed to the record amplifier. The present trend for airborne record-only applications is to eliminate these amplifiers in preference for

weight and form factor. The magnetic tape is played back in the ground facility where laboratory quality amplifier systems can be used.

The following reference is suggested for source material concerning reproduce amplifiers: Ref. 11.9.

11.3.6 Video recording

In 1956, Ampex Corporation announced their newly developed rotating head video recorder using 2-in. wide tape (Ref. 11.10). Rotating head technology afforded a high head-to-tape speed of about 1500 in/sec, which made it possible to record sufficient bandwidth of the video by using super high band FM recording.

The rotary-head recorder used a transverse format in which recording was done by four heads mounted on a rotating drum; this was called the quadraplex head. However, experience with the transverse-scanning system revealed some difficulties that required horizontal synchronization switching during reproduction of the recorded signal. As a consequence, helical-scan systems were proposed as a solution.

In the beginning stages helical scan was conceived of as using a single video head in the drum and wrapping the tape around the drum in such a manner that the signal is recorded in a slanted or diagonal locus on the surface of the tape.

11.3.6.1 Typical color video systems

Initially it was necessary for television transmission equipment to be synchronized with commercial main power frequency. In countries such as the United States and Canada, 30 frames (pictures in Europe) are transmitted each second at the vertical scanning rate of 60 Hz, while 25 frames are transmitted each second in Europe, Australia, China, and other 50-Hz countries. Japan has both 50- and 60-Hz systems. The rate of 25 frames per second is rather close to the minimum number of frames that the eye will accept as a continuous picture without flicker. This presents a serious dilemma because the frame rate should be kept as low as possible in order to keep the bandwidth narrow.

The number of horizontal lines determines the bandwidth of the television signal as well as the vertical definition of the television picture. Following a lengthy history of development, unified standards of 625 lines and 50 fields per second were established for western Europe color transmissions, including the United Kingdom. The other countries including the United States and Japan using 60-Hz power adopted 525 lines (Ref. 11.11).

Color television systems can be classified into three main types: NTSC (National Television System Committee), PAL (phase alternation line), and SECAM (sequential color and memory). The major differences among these variations are in the specific modulation processes used for encoding and transmitting chrominance signal. Refer to the comparisons in table 11.1.

NTSC

The basic idea of color television derives from the NTSC system developed by RCA in 1953, it has been used in the United States since 1954 and in Japan since 1960. In order to transmit the three primary R, G, B color signals, a frequency bandwidth three times wider than that needed for monochrome is required. However, the NTSC system can transmit the luminance signal Y and the chrominance signals C within the same frequency band as monochrome and is thus compatible with monochrome television signals. This composite system uses two carriers of the same frequency, 3.58 MHz, having a phase displacement of 90 degrees, amplitude-modulated by color-component signals. These two color signals are represented by two vector signals I and Q. Color hue is determined by the phase of the combined color subcarrier signal, and color intensity is determined by the amplitude of the color subcarrier.

PAL

The PAL system, developed by Telefunken in 1962 is similar to the NTSC system, with the exception that the color-difference signals are represented by U and Y, which have equal bandwidths and are transmitted on a 4.43 MHz subcarrier, with the V signal reversing in phase on alternate lines. In the NTSC system, phase distortion causes an incorrect color transmission, but in the PAL system the V color-difference signal reverses in every other line. The reproduced color signal distortion can be averaged out by means of a single-horizontal-line delay line. Or in the case of cheaper receivers it is averaged out by the viewers eye.

SECAM

The SECAM system was first developed in France in 1967. This method of color transmission is quite different from NTSC and PAL. The color difference signals are transformed into frequency modulation signals with different subcarriers and transmitted successively on alternate lines. Simultaneous color-difference signals are reproduced using a horizontal scanning period delay line in the television receiver, thus, the system is not influenced by phase distortion in transmitted color signals.

High-definition television systems

The amount of information which can be transmitted over the television system has increased dramatically in recent years. Future needs indicate the necessity for pictures of higher definition than NTSC, PAL, and SECAM. The development of high-definition television has been guided by dictates of the three main parameters: picture size, number of scanning lines, and visual impact. The major characteristics are compared in table 11.1.

Table 11.1. Comparison of the major television systems.

	NTSC	PAL	SECAM	High definition
Fields, per second	60	50	50	60
No. of horizontal lines	525	625	625	1125
Aspect ratio	4:3	4:3	4:3	16:9
Subcarrier, MHz	3.58	4.43	4.25 4.40	
Luminance bandwidth Y, MHz	4.2	5.0	6.0	20
Chrominance bandwidth C, MHz	I: 1.3 Q: 0.4	U: 1.3 V: 1.3	D_R: 1.3 D_B: 1.3	C_W: 7.0 C_N: 5.5
Color system	AM by two-color signals having 90° phase displacement	(Similar to NTSC) U and V color-difference signals reverse in phase on alternate lines	Color-difference signals (R – Y and B – Y) are transmitted by FM on alternate lines	Color-difference signals (C_w and C_N) are processed by component

Development of video tape

In the early stages of development, standard audio tape was used for the recording of video signals. When video recording became commercially feasible it was necessary to develop a special video tape. The standard audio tape was not well adapted to the relative high head-to-tape speed of rotary equipment nor to the necessity of recording short-wavelength signals on an extremely narrow track. Increasingly stringent requirements were added to the video tape with the adoption of helical scan. The complex tape path also required the tape to be extremely smooth and with the development of miniaturized cassette-loading mechanisms the conditions to which the video tape was to be subjected were very severe.

The type of magnetic tape that eventually was developed was the result of many compromises . . . a well-balanced solution to conflicting demands.

Video tapes must meet the requirements of both instrumentation and computer tapes. They must have a high signal-to-noise ratio and few drop outs. An often highlighted feature of helical-scan video recorders is their still-frame capability. With the tape motion stopped, the rotating head assembly will scan a particular portion of the recorded tape and display it. A very high temperature is generated in the contact area between the rapidly moving head and the tape (in the order of several hundred degrees C) and this may wear out the tape or cause clogging of the head gap. Some tapes have a still-frame capability of only a few seconds and are rated "poor" while others will last in excess of one hour. As a consequence the still-frame test is usually used as a figure of merit for video tape.

Tape loading mechanisms

In general, a container with two reels is called a cassette and one with only a single reel, a cartridge. Video cartridges have all but disappeared from use. When the tape is in a cassette, it is necessary that the tape be physically pulled out from the container and wound around the rotary-head drum. The two disadvantages of the cartridge are that the tape cannot be removed from the machine until the rewind is completed and there is a risk of damaging the exposed tape if not fully rewound.

As magnetic recording technology developed, reel size diminished and two reels could be put into a single container. Thus the cassette gradually came into use. There are two types of cassettes: one is the tandem cassette in which the two reels are stacked one over the other coaxially; the other is the parallel two-reel cassette. Since the supply and take-up reels in the tandem cassette are on different levels, the tape obviously has to travel in a diagonal path from one reel to the other. Although this diagonal tape path is easily adapted to wrapping around the head drum, as required for helical-scan recording techniques, the more complex tape path here necessitates a correspondingly more complex reel drive mechanism. This tandem cassette is now obsolete.

Rotary heads

The primary advantage of rotary-head transports over fixed-head transports is their greater areal information packing density. For tape-noise-limited systems, the signal-to-noise ratio is reduced 3 dB for each track-width halving, but the bandwidth is doubled since two tracks can be accommodated in the same area. The net gain is 3 dB in information handling capacity each time the track-width is halved. Rotary head transports can handle well over 6×10^5 bits per square millimeter, and can theoretically handle densities beyond optical limits. They are, however, restricted by head constraints in the bandwidth they can handle in one track. Bandwidths beyond 300 Mb/s per track are rather difficult to achieve and will most likely require multiple rotary heads. Rotary head-tape machines are now primarily of the helical-scan configuration similar to those used for professional video recording. HDDR is in general use and the track interruption is easily accommodated by digital buffering.

Digital video recording

Conventional analog devices record the video signal by means of frequency modulation, and the analog information is converted to differences in distance between the zero-crossing points of the FM signal. The most commonly used coding method in digital video recording is PCM. For a number of reasons, digital recording is the ideal recording method for use in magnetic recording (see pages 11–17), but it does have two disadvantages. First, HDDR is required because of the wide frequency range involved. Second, a great number of circuits are required for digital encoding and decoding, as well as for error correction.

The home video tape recorder

The history of home video recording is a series of significant reductions in both head drum and tape sizes. In 1964, 1/2-in. wide tape was first used to record a 1-hr program on a 7-in. reel of tape using the two-head helical scan method. In order to solve the playing time problem, azimuth recording was developed. This technique involves the use of two heads with different inclined gaps. This produces an azimuth loss of sufficient magnitude to enable the guard bands between tracks to be eliminated. The result was a black-and-white video recorder developed by Panasonic that provided 90-min. playing time on a 7-in. reel.

The Beta format was then introduced by Sony in 1975, followed by JVC VHS format in 1978, the V-2000 by Phillips for the European market, and then in 1984 the 8-mm video format was introduced by international agreement at the 1984 "8-mm Video Conference." As a result, the tape cost of video recording per hour has become less than that of audio recording on tape. The development of new recording media, improved heads and solid-state electronics has produced a complete color quality video camera/record product that when ruggedized is worthy of use in most flight test applications. Recorder data are shown in table 11.2.

Table 11.2. Recorder comparisons of the cassette video systems.

	VHS			Beta			8-mm video	
	SP	LP	ELP	β-I	β-II	β-III	SP	LP
Recording time, min	120	240	360	60	120	180	120	240
Tape speed, mm/s	33.3	16.7	11.1	40	20	13.3	14.3	7.2
Track pitch, μm	58	29	19	58	29	19	20	10
H-Alignment difference (α_H)	1.5H	0.75H	0.5H	1.5H	0.75H	0.5H	1.0H	0.5H
Head drum diameter, mm	62			75			40	
Luminance FM carrier, MHz	3.4–4.4			4.0–5.2‡ 3.6–4.8 (4.4–5.6)§			4.2–5.4	
Color-under carrier, MHz	0.63			0.69			0.74	
Cassette dimensions, mm	25H×188W×104D			25H×156W×96D			15H×95W×62.5D	
Tape length, m	240			150			108	
Tape thickness, μm	20			20			10	
Relative tape speed, m/s	5.8			7.0			3.8	
Tracking method	Control signal			Control signal			4 Freq. pilot signals	
Azimuth, degrees	±6			±7			±10	
Track angle (running)	5°58′99″			5°01′42″			4°54′13.2″	
Fixed-head audio channels	1 or 2			1 or 2			1	
Audio track width, mm	1.00 or 0.35×2			1.05 or 0.35×2			0.6	
Rotary-head audio channels	FM 2 (Double component)			FM 2 (Freq. division)			FM 1 (Freq. division) PCM 2 (8-bit with noise reduction)	

	VHS	Beta	V-2000	8-mm video
Recording time, min	180/360	130	360 (both ways)	90/180
Tape speed, mm/s	23.4/11.7	18.7	24.4	20/10
Cassette size, mm	25H×188W×104D	25H×156W×96D	26H×183W×62D	15H×95W×105D
Head drum diameter, mm	62	75	65	40
Luminance FM carrier, MHz	3.8–4.8	3.8–5.2	3.3–4.7	4.2–5.4
Color-under carrier MHz	0.63	0.69	0.63	0.74
SECAM color-recording method	Color-under	Color-under	Color-under	PAL/SECAM Trans Coder
Tape length, m	258	150	260	108
Tape thickness, μm	20	20	15	10
Track pitch, μm	49/24.5	33	23	34/17
H-alignment difference (α_H)	1.5H/0.75H	1.5H±0.5H	1.5H	2H/1H
Relative tape speed, m/s	4.8	5.8	5.0	3.1
Tracking method	Control signal	Control signal	4 freq. pilot	4 freq. pilot
Azimuth, degrees	±6	±7	±15	±10
Track angle (running)	5°57′50.3″	5°00′58″	2°63′50″	4°54′58.8″
Fixed-head audio channels	1 or 2	1 or 2	1 or 2	1
Audio track width, mm	1.00 or 0.35×2	1.05 or 0.35×2	0.65 or 0.25×2	0.6
Rotary-head audio channels	FM 2 (double component)	FM 2 (double component)	...	FM 1 (freq. division) PCM 2 (8-bit with noise reduction)

The ruggedized 8-mm cassette recorder

The first PCM data recorders using helical scan appeared about 1980, and by 1985 the digital audio tape (DAT) machines were being marketed. During the next two years the standard DAT was modified to record PCM data, analog, MIL-STD-1553, voice, and IRIG timing. This technology, including the magnetic tape, has continued to be improved to the point that now it is quite common place to be able to select an 8-mm record format from a variety of off-the-shelf recorders readily capable of providing storage for up to 5 gigabytes of formatted data.

In the rotary head digital audio tape recorder (R-DAT) format, a recording density of 129 Mb/in^2 has been achieved by a combination of azimuth recording and track following-servo. This permits 2 to 3 hours of recording. Typical vendor specifications are shown in table 11.3.

Table 11.3. Typical vendor specifications.

FEATURES

- ☐ Flight Qualified
- ☐ 8 mm Digital Helical Scan Technology
- ☐ 5 Gbytes of Storage
- ☐ Multi-Stream PCM Inputs to 4 Mbps
- ☐ Compact Size and Light Weight
- ☐ 68340 Microprocessor for Flexible Control
- ☐ IRIG A/B Time Tag
- ☐ Optional Interface Types Include:
  - » Voice »
  - » MIL-STD-1553 »

Record/Reproduce System: Multiplex PCM providing analog input and output
Tape: Conforms to DAT standards. Recommended tapes: Maxell DM120 (tape length: 60m) Maxell DM60 (tape length: 30m)
Recording Format: Helical scanning R-DAT
Quantization: 16-bit
Recording Data Length: Upper 14 bits
Record/Reproduce Head: 4 (record/reproduce heads × 2, heads for error-checking × 2) (erasure is by overwriting)
Error Correction Method: Double Reed-Solomon
Tape Speed & Drum Rotation: 16.3mm/sec (5/8"/sec), 4000rpm; 8.15mm/sec (5/16"/sec), 2000rpm
Recording Time: 1hr (16.3mm/sec, DM120); 2hrs (8.15mm/sec, DM120)

The 8-mm tape cassette differs somewhat from the standard VHS/Beta cassettes due to built-in tape guides. See Figure 11.5.

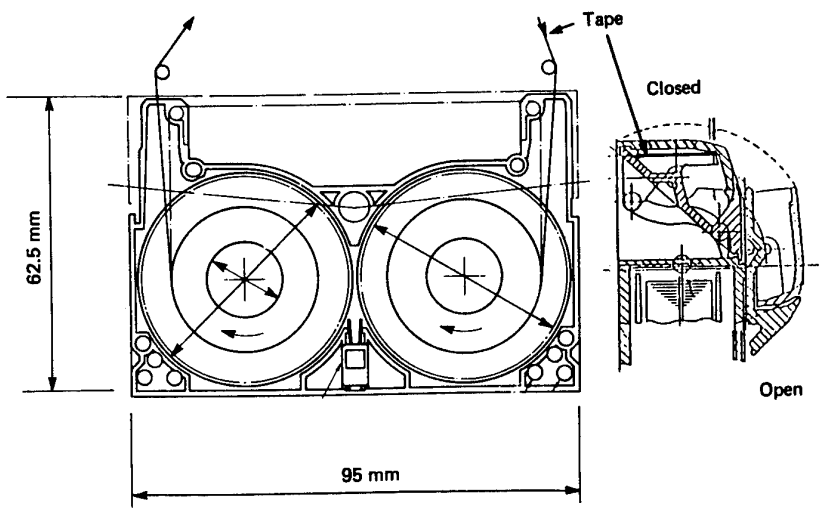

Figure 11.5. The 8-mm cassette.

11.3.7 Magneto-optical recording systems

An alternative type of magnetic recording system uses an optical beam read-write device instead of an inductive or flux-sensing head. Writing is achieved via a change in the magnetic properties of the media when heated by the beam. Reading is accomplished with a lower intensity beam using the magneto-optical rotation of the plane of polarization. Very high recording densities are possible. This recording method has the advantage of avoiding close proximity between heads and media, while offering a higher record density than currently achievable in magnetic recorders.

The basic concept of the optical head and disk are shown in Figure 11.6. The focusing and tracking lens above the disk can be mechanically accessed with a small electromagnetic actuator of the type used for magnetic recording on disks. Writing is achieved by modulating the beam in the presence of a perpendicular magnetic field applied from a current carrying coil underneath the disk. Recording takes place in physically pre-grooved tracks molded into the substrate. Reading of the magnetized track is achieved at reduced beam power and without the field applied.

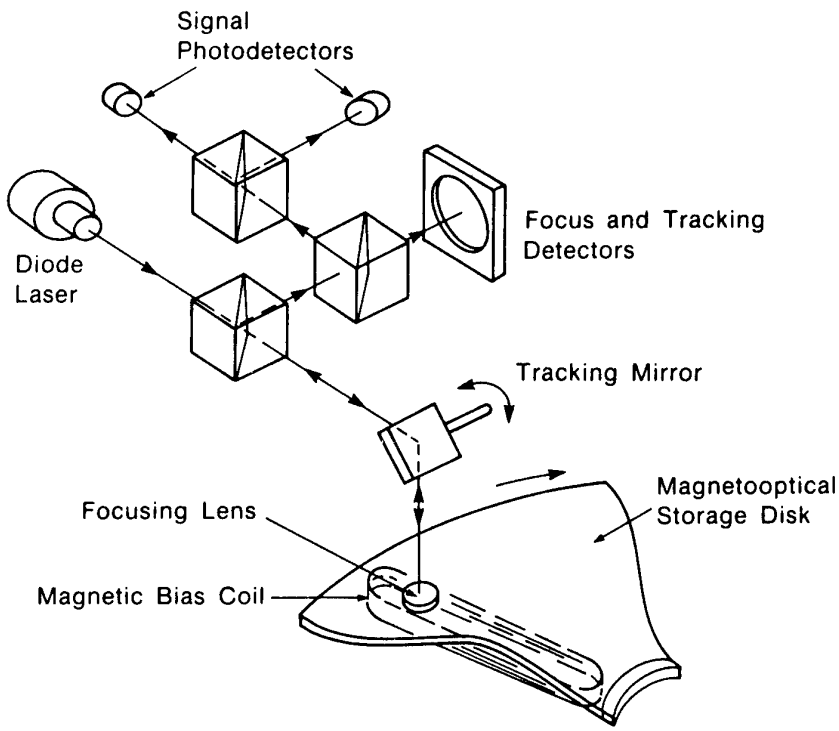

Figure 11.6. Optical read-write head used with magnetic media.

Magneto-optical recording combines very high storage density, low cost, random access, erasability, and removability. The areal storage densities of 0.5×10^6 b/mm^2 that are easily attainable with magneto-optical recording are one order of magnitude greater than most currently available magnetic recording products.

The ability to read and write small bits with a large mechanical clearance leads to many favorable attributes of magneto-optical systems. First, it enables second-surface operation, which greatly improves immunity to surface dirt and scratches, and allows good isolation of the active film from the atmosphere. This in turn permits the removal of media, consequently enabling the drive to be used with any medium (erasable, nonerasable, and read-only). Removability requires little additional servo performance because embedded servos are in any event required at high track densities. Second, there is no possibility of data-destroying head "crashes" and magneto-optical drives should be relatively immune to shock and vibration. A shock large enough to cause loss of focus would only delay disk I/O by a fraction of a second.

Again, as with audio and video, the technological drive for magneto-optics originated with the commercial consumer. The commercial success of these drives required the development of inexpensive diode lasers, optics, actuators, servos, photo-diodes, VLSI error correction, and preformatted substrates. Some of these were currently available from digital audio players (compact discs) and were incorporated in magneto-optical systems with very little alteration.

Ruggedized magneto-optical systems have already been developed for airborne applications and are presently being flown on high-performance fighter type aircraft.

11.3.8 The solid-state memory

The types of recorders discussed so far are electro-mechanical machines that move the recording medium past a stationary optical system or a static or rotating magnetic head assembly. These machines require careful fitting, operation, and servicing, and can easily be damaged by mishandling. In contrast, solid-state recorders have no moving parts and are engineered to withstand a more severe environment. This form of recorder is not restricted by mechanical delays and can therefore record data at a higher rate. The data capacity for this type of recorder is typically less than 10 Mbytes which is rather low when compared to magnetic tape recording systems.

There are three basic types of solid-state recorders which are defined by the type of memory used:

a. Random access memory (RAM), static random access memory (SRAM) and dynamic random access memory (DRAM).

b. Electrically programmable read only memory (EPROM), and electrically erasable EPROMs, (EEPROM).

c. Magnetic-bubble memory.

The circuit elements used to build the first two types of solid-state recorders are undergoing development by several manufacturers. Encouraged by competition in the microcomputer field it is expected that the capacity/volume ratio will continue to improve. In comparison the magnetic-bubble memory has minimal support, due in part to the extensive external circuitry required for its support.

All forms of the solid-state recorder are usually constructed so that the memory elements mounted on their printed circuit cards are detachable for transporting to the replay facility.

The random access memory

This type of storage device will accept the highest data rate, 300 Mbits/sec for a system organized 2 bytes wide, the device requires constant power during the storage of data. On some systems a backup battery is provided for the integrated circuits to provide a practical storage duration. Each data bit is stored in a separate bi-stable circuit for which a standby mode of operation is often provided for a typical SRAM package of 4 Mbits of memory in less than 1.3 in^3.

DRAMS require refresh circuitry, and refresh operation slightly restricts memory access. Typical is the synchronous DRAM since it is still composed of dynamic cells that lose their charge. But another option, self-refresh, appears on many of the newer byte wide DRAMs. This new, simpler refresh mode is completely controlled on the chip and retains data in a low power mode. The self-refresh option is expected to be available on all synchronous DRAMs. It is reasonable to assume that the DRAM, once considered too slow for high-performance applications, will replace the more costly SRAM.

For example, these types of memory storage devices have been used for the following purposes:

- Aircraft wheel hub temperature measurements (4 Kbytes).
- Man-carried parachute performance (4 Kbytes to 912 Kbytes).
- Aircraft computer dumps (4 Kbytes to 64 Kbytes).

The erasable programmable read-only memory

This type of device is slower than the RAM, but has the advantage of being nonvolatile. Data rate is about 1000 bits/sec. Each bit is stored as an electrical charge on a miniature capacitor. As the name implies, erasure is possible, either by exposing the EPROM to an ultra-violet lamp or electrically erasing the EPROM with a voltage. EPROMs will only accept a finite number of read-write cycles. With continuous improvement this life span is being improved. This is unlikely to be a future problem except in applications where the same memory units are used repeatedly. A further problem with the EPROM is that its ceramic package with a quartz window for erasure significantly adds to the cost.

EEPROM technology was introduced as an improvement to EPROM. The main advantage of the EEPROM over the EPROM is system flexibility since it can be programmed and/or erased while in position. The disadvantage is that its cell size is larger than the EPROM. Flash EEPEOM technology offers nearly the same cell size as EPROM and also provides electrical erasure. FLASH refers to the entire memory, or a large block of it, being

erased at the same time. This can be advantageous, but, it can also be a disadvantage because single bytes cannot be erased.

The magnetic-bubble memory

The magnetic bubble stores its data in a solid piece of magnetic material. Complicated electronic management and control is required to use this technique. Data is stored in a nonvolatile way. Both its maximum data rate and its operating temperature range are narrower than the RAM. The data rate for a typical storage device of this form is 75 Kbits/sec. Each magnetic structure has a data capacity of 4 Mbits. Construction uses integrated circuits for the control system and the magnetic bubble memories mounted on printed circuit boards.

Playback process

A small, cheap microprocessor can provide the necessary replay for solid-state memories, but this is not a requirement. This type of storage device can be examined by a simple LED array, however, some form of special interface electronics is usually necessary for replaying solid-state memories.

The erase and test modes are carried out as part of the replay process. Data may be archived on the computer's standard nonvolatile storage system. For replay of a magnetic bubble memory the control circuitry can be arranged to present the data as a serial bit stream or in a byte wide form, but the data will always be in sequential order.

11.4 CONCLUSIONS

A brief review of existing airborne recording systems has been presented. Although some of the technology reviewed is considered by some to be obsolete it is never-the-less still being used by flight test agencies where economics is the prime concern. These techniques are still highly valid and are only limited by the minimal number of data channels recorded and by the labor intensive data reduction requirements.

Present trends indicate a nearly universal acceptance of magnetic recording of onboard data with the data recording media migrating from the open reel to the cassette.

Although relatively new to airborne applications, magneto-optical recording will probably replace magnetic tape recording in the future.

In a few circumstances solid-state recording is employed but it is presently limited because of data rate and capacity, although weight and size make it useful for some applications.

11.5 REFERENCES

11.1 NATO AGARD Flight Test Manual, Instrumentation catalog, Pergamon Press, Oxford London, U.K., Library of Congress Card No. 59-13097. Section C-2. December 1961. Revised 1962.

11.2 NLR MP 86010 U, "Trajectory Measurement of the Fokker 100 Aircraft During Auto-Land Testing," date.

11.3 NATO AGARD Flight Test Manual, Instrumentation catalog, Pergamon Press, Oxford London, U.K., Library of Congress Card No. 59-13097. Section C-1. December 1961. Revised 1962.

11.4 Harris, J.P., W.B. Phillips, J.F. Wells, and W.D. Winger, "Innovations in the Design of Magnetic Tape Subsystems," IBM J. Res. Dev., Vol. 25, 691, 1981.

11.5 Kryder, M., "Magneto-Optic Recording Technology," *J. Appl. Phys.*, Vol. 57, 3913, 1985.

11.6 IRIG Standards.

11.7 Lowman, C.E., "Magnetic Recording," McGraw-Hill Book Co., New York, New York, 1972.

11.8 McKnight, J.G., "Erasure of Magnetic Tape," *J. of Audio Eng. Soc.*, Vol. 11, Oct. 1963, pp. 223–223.

11.9 Mee, C.D. and E.D. Daniel, "Magnetic Recording, Vol. III Video, Audio, and Instrumentation Recording," McGraw-Hill Book Co., New York, New York, 1988.

11.10 Howard, J.A. and L.N. Ferguson, "Magnetic Recording Handbook," Hewlett Packard Application Note 89, Palo Alto, CA, 1970.

11.11 Ginsburg, C.P., "Development of the Video Tape Recorder," in Videotape Recording, Ampex Corporation, Redwood City, CA, 1986.

11.6 BIBLIOGRAPHY

1. Kalil, F., *Magnetic Tape Recording for the Eighties*, NASA RP-1075, U.S. Government Printing Office, Washington, D.C., 1982.

2. Kalil, F., *High-Density Digital Recording*, NASA RP-1111, U.S. Government Printing Office, Washington, D.C., 1985.

3. Newby, P.S. and J.L. Yen, "High Density Digital Recording Using Videocassette Recorders," *IEEE Trans. Magn.*, MAG-19, 2245, 1983.

4. Weber, P.J., "The Tape Recorder as an Instrumentation Device," Ampex Corporation, Redwood City, CA, 1967.

5. Carasso, M.G., J.B.H. Peek, and J.P. Sinjou, "The Compact Disc Digital Audio System," Phillips Tech Rev., Vol. 40(6), 151, 1982.

6. Hunt, R.P., "Magneto-optics, Lasers and Memory Systems," *IEEE Trans. Magn.*, MAG-5 700, 1969.

7. Sugaya, H., "The Videotape Recorder: Its Evolution and the Present State of the Art of VTR Technology," *J. SMPTE*, Vol. 95, 301, Mar. 1986.

8. Kihara, N., F.Kohno, and Y. Ishigaki, "Development of a New System of Cassette Type Consumer VTR," *IEEE Trans. Consumer Electron.*, Vol. 22, 1, 1976.

9. Givone, Donald D. and R.P. Roesser, "Microprocessors-Microcomputers, An Introduction," McGraw-Hill Book Co., New York, 1980.

Chapter 12

TELEMETRY

by

Alfred Becker
DLR/FF-FL
PO Box 3267
38108 Braunschweig
Germany

12.1 INTRODUCTION

A telemetry measuring system in general makes use of the following components and functional blocks (see Fig. 12.1)

- on board the aircraft:
  - transducers for conversion of physical data into electric signals (see Chapter 5)
  - signal conditioners for matching the transducer output signal to the normalized inputs of the multiplexer (see Chapter 6)
  - a multiplexer for combining the *N* normalized data signals to a single output signal in a reversible process
  - an onboard magnetic tape recorder for recording the multiplexed data signal (optional)
  - a radio frequency transmitter for transmitting the multiplexer output signal by means of a modulated RF carrier
  - a transmitting antenna for radiating the modulated RF carrier

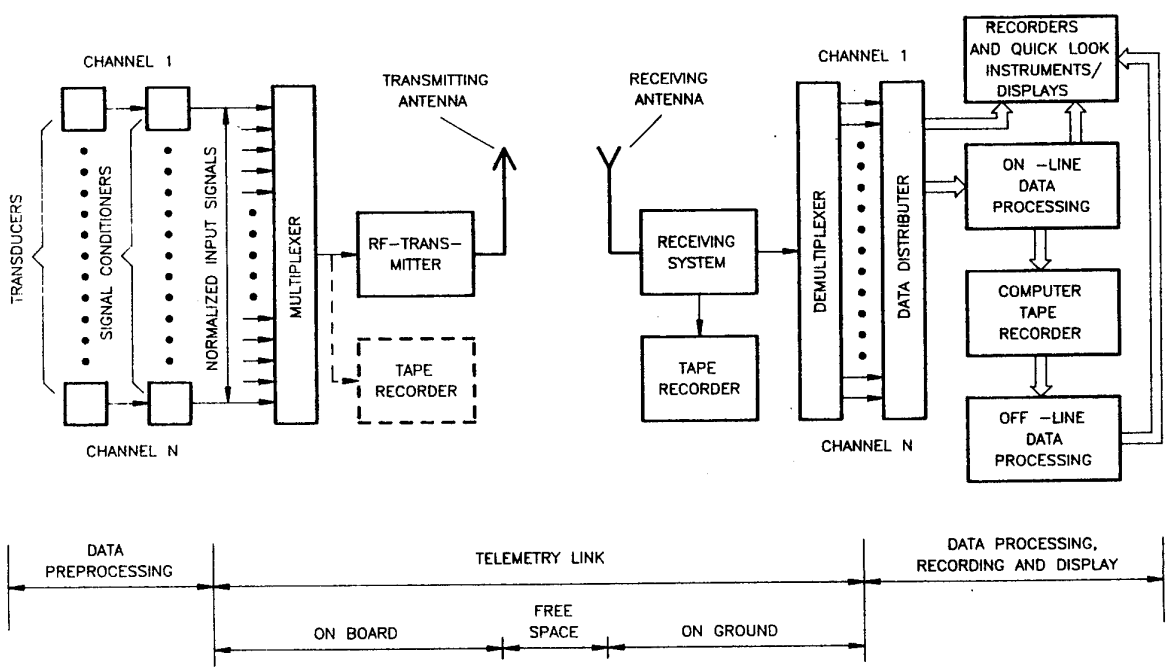

Figure 12.1 Block diagram of a telemetry measuring system.

- on the ground:
  - a receiving antenna for converting the electromagnetic field at the ground station into an electrical receiver input signal
  - a receiving system for selecting and amplifying the weak wanted input signal out of the background of unwanted signals and noise
  - a tape recorder for storing the multiplexed data signals on magnetic tape
  - a demultiplexer for converting the multiplexer output signal back into the original N data signals
  - a data distributor for providing the subsequent data processing and display units with the required data signals
  - an on-line data processing facility for processing a selected set of data which are important for a quick analysis of flight test results in order to respond by corrective commands while the test aircraft is still in the air
  - recorders and quick-look facilities for on-line display of original data and processed data
  - an off-line data processing facility for detailed processing of the test data in order to get the final test results.

This chain of components and functional blocks is displayed in Figure 12.1. Only those topics in the above listing are considered in the paragraphs of this chapter which are not referenced to another chapter.

First, however, some more general remarks should be given. In comparison to on-board recording telemetry of flight test data is advantageous in many applications (see also Section 9.2.3). The main advantages are:

- less weight and volume of the onboard equipment
- less sensitive to extreme environmental conditions like shock and temperature
- better quick-look and on-line data processing capabilities; access of experts on the ground to the on-line test results provides a better flight test efficiency
- further improvement of flight-test efficiency possible by use of an additional up-link telemetry system for transmission of relevant ground data to the test aircraft (e.g., precise ground radar position data and commands)

On the other hand there are a few drawbacks which may prevent the use of telemetry or make the use of onboard recording recommendable in some applications:

- the range is limited by the physical characteristics of wave propagation to line of sight conditions
- the positioning of onboard antennas may be difficult
- dropouts of data reception due to fading in the radio frequency channel which can be caused by shadowing of the onboard antenna by the aircraft structure a certain flight attitudes or by multipath wave propagation. A powerful means against these perturbances is available by the use of diversity techniques (see Section 12.2.3).

Conclusively it can be stated that a well-designed telemetry system is of great importance for the performance quality and efficiency of flight testing.

12.2 BASIC METHODS

Prior to the discussion of today's telemetry systems some general considerations of basic methods which are of importance in telemetry will be given. These methods pertain to the principles of modulation and multiplexing.

12.2.1 Modulation

Four different objectives of modulation which are relevant for telemetry are illustrated by Figure 12.2. These are:

(a) shifting the signal spectrum to the frequency band of the transmission channel; e.g. shifting the voice spectrum by amplitude modulation to the assigned radio-frequency voice communication channel,

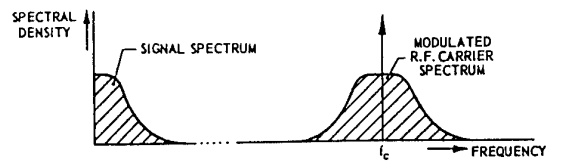

A. SHIFTING THE SIGNAL SPECTRUM TO THE TRANSMISSION FREQUENCY BAND

(b) widening the shifted signal spectrum in order to get better protection against channel noise; e.g., by using frequency modulation),*

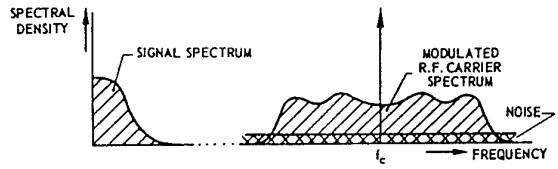

B. WIDENING THE SHIFTED SIGNAL SPECTRUM

(c) grouping a set of signals by means of modulated subcarriers or pulses and modulating the RF-carrier by this composite signal (frequency-division multiplexing or time-division multiplexing, respectively),

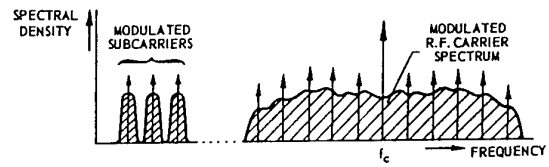

C. MODULATING SEVERAL SUBCARRIERS ON ONE R.F. CARRIER
(FREQUENCY-DIVISION MULTIPLEXING)

(d) matching a signal to a specific channel, e.g., to a tape recorder direct channel (overcoming the lack of dc-response and the inconstancy in amplitude transmission of this channel, see Chapter 9).

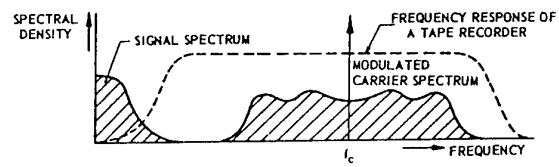

D. MATCHING THE SIGNAL TO THE RESPONSE CHARACTERISTICS OF, E.G., A TAPE RECORDER

Figure 12.2 Objectives of modulation.

The usual modulation methods are shown in Figures 12.3 and 12.4. We have to distinguish between the continuous modulation methods and the pulse modulation methods. In the first case the parameters of a sinusoidal carrier (amplitude, frequency, or phase) are controlled by the signal voltage. The modulated carrier can be described best in the frequency domain by its spectrum (see Fig. 12.3). In the second case the parameters of a pulse carrier (amplitude, duration phase) are controlled by the signal voltage (see Fig. 12.4). In this case the modulated carrier can be displayed more clearly in the time domain by its time function.

12.2.1.1 Continuous modulation methods

In the case of amplitude modulation (AM) the time function of the modulated carrier is

$$u(t)_{\mathrm{AM}} = U_c \cdot [1 + m \cdot s(t)] \cdot \cos(\omega_c \cdot t) \tag{12.1}$$

with the carrier wave $U_c \cdot \cos(\omega_c \cdot t)$. The normalized signal time function $s(t)$ is bounded by ± 1. The range of the modulation factor m usually is ≤ 1. The spectrum of the modulated wave consists of one line at the carrier frequency ω_c and an upper and lower sideband. The upper sideband is obtained by shifting the signal spectrum by ω_c along the ω-axis. The lower sideband is the image of the upper sideband, symmetrical to ω_c. Therefore,

* Some modulation methods make use of the well-known trade-off between signal-to-noise ratio and bandwidth. They obtain better signal-to-noise ratios at the output of the demodulator by manipulating bandwidth and shape of the spectrum. As a rule it will be advantageous to use a modulation method which occupies all the available channel.

the bandwidth of the AM spectrum is twice the bandwidth of the original signal spectrum (see Refs. 12.1, 12.2, and 12.3).

The main drawback of AM is that most of the power of the modulated wave is required for the carrier. In the demodulator the carrier is used only for switching the AM wave in order to recover the demodulated signal. It contains no signal information. Since it is possible to obtain the switching signal for the demodulation process in other ways, e.g., by manipulating the sidebands, it is more efficient to suppress the carrier before transmission (double-sideband suppressed-carrier modulation (DSB)). However, the hardware of DSB is more complex than that of the simple AM. In the case of AM and DSB all the signal information is contained in each of the two sidebands. Therefore, one sideband may be suppressed by filters and the single-sideband suppressed-carrier modulation (SSB) is obtained. The bandwidth of SSB is equal to that of the signal, and half the bandwidth of AM and DSB. The signal-to-noise ratio is equal to that of DSB but, because of the smaller bandwidth, one can handle twice as many data channels in a given frequency range as with AM and DSB. The main drawbacks of SSB are the high degree of hardware complexity and the lack of dc response. The spectra of DSB and SSB may easily be derived from the AM spectrum display in Figure 12.3.

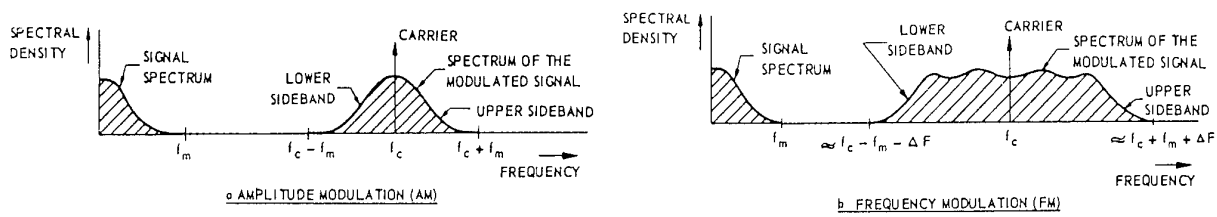

Figure 12.3 Continuous modulation methods.

For a deeper understanding of modulation it may be worth mentioning that a close connection exists with the sampling theorem, which is discussed in Chapter 7. We assume a signal spectrum with an upper frequency f_m. If the carrier frequency f_c is less than 2 f_m, there will be a range of frequencies where the unmodulated and the modulated signal spectrum overlap. This will cause aliasing errors when the signal is demodulated. The AM process may be regarded as the sampling of a signal $s(t)$ by the sine wave.

Frequency modulation (FM) (Fig. 12.3(b)) is a wideband modulation method which makes use of an extended bandwidth in order to improve the signal-to-noise ratio. Because of the relatively simple hardware FM is of great importance for flight testing. In FM the frequency of the carrier wave is modulated in the following way

$$f_{FM} = f_c + \Delta F \cdot s(t) \tag{12.2}$$

where f_c is the frequency of the modulated carrier, F is the frequency deviation and $s(t)$ is the normalized signal (see above). It can be shown (see Refs. 12.1, 12.2, 12.3, 12.4, and 12.5) that the increase of the signal--to-noise ratio is proportional to the ratio

$$M = \frac{\Delta F}{f_m} \tag{12.3}$$

M is the so called modulation index and f_m the highest frequency component of the signal spectrum (see Fig. 12.3(b)). With FM subcarriers (Section 12.3) modulation indices of 5 preferably are used in practice for flight testing.

Unfortunately, the bandwidth of the FM-spectrum also increases as a linear function of Δf, thus limiting the obtainable gain because of the general restrictions on available bandwidth.

A special case of FM is the phase modulation (PM). This is accomplished by letting the signal $s(t)$ control the carrier phase instead of the carrier frequency. Its special feature is a preemphasis which increases the amplitude of the signal spectrum linearly with frequency.

12.2.1.2 Pulse modulation methods

In pulse amplitude modulation (PAM) (Fig. 12.4(a)) the signal $s(t)$ is sampled at discrete points in time. This process is described in detail in Chapter 7. All considerations of that chapter apply directly to PAM.

Pulse duration modulation (PDM) (Fig. 12.4(b)) is obtained by converting the amplitude of the PAM samples into a pulse duration. Thus a train of pulses with variable width is generated, and the dynamic range of the signal is transformed from the amplitude domain to the time domain. The minimum value of the signal $s(t)$ corresponds to the shortest pulse duration; the maximum value corresponds to the longest pulse duration. The amplitude of the PDM pulse train remains constant. PDM, as FM, is a wideband modulation method. In the past it has been used for simple systems but since some years it is not any longer an IRIG-standardized system (see Ref. 12.6).

For the sake of completeness, pulse position modulation, or pulse phase modulation (PPM), is also displayed in Figure 12.4(c), though it is not a standard modulation method in telemetry. In this case the relative position of a pulse is controlled by the signal. A time reference is required for demodulation.

Due to the great technological progress in integrated circuits, the use of pulse code modulation (PCM) has become increasingly important during the last two decades. In this method the PAM samples are coded in a "word" of N pulses, using only the levels 0 and 1. Being a digital method, any required accuracy can be obtained by proper choice of the word length N. Besides, PCM makes excellent use of the law of exchangeability between signal-to-noise ratio, and bandwidth. PCM is widely used in time domain multiplexing systems. Serial format PCM can be derived from a PAM signal by an analog-to-digital converter with a serial output. The clock frequency for the A/D converter must be N-times the PAM sampling frequency. This obviously shows the increase in bandwidth. N, the number of bits for each sample, is determined by the required amplitude resolution. On the other hand it is clear that PCM is less sensitive to errors due to noise because only two levels of the signal have to be discriminated.

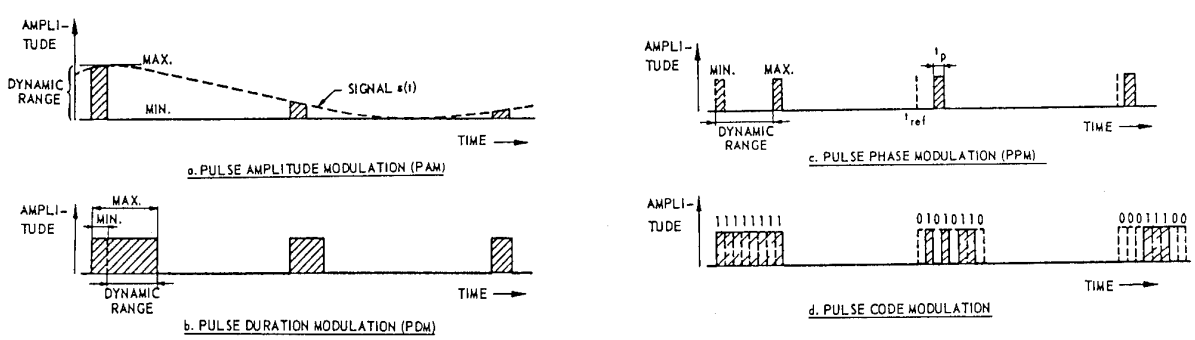

Figure 12.4 Pulse modulation methods.

There are various formats for encoding the two levels 0 and 1. The IRIG standardized formats (see Ref. 12.7) are given in table 12.1. In Figure 12.4(d) the "non return to zero-level (NRZ-L)" format has been used. For further details see Para 12.3 as well as Ref. 12.6 and Ref. 12.7.

Table 12.1 PCM codes (see Ref. 12.6)

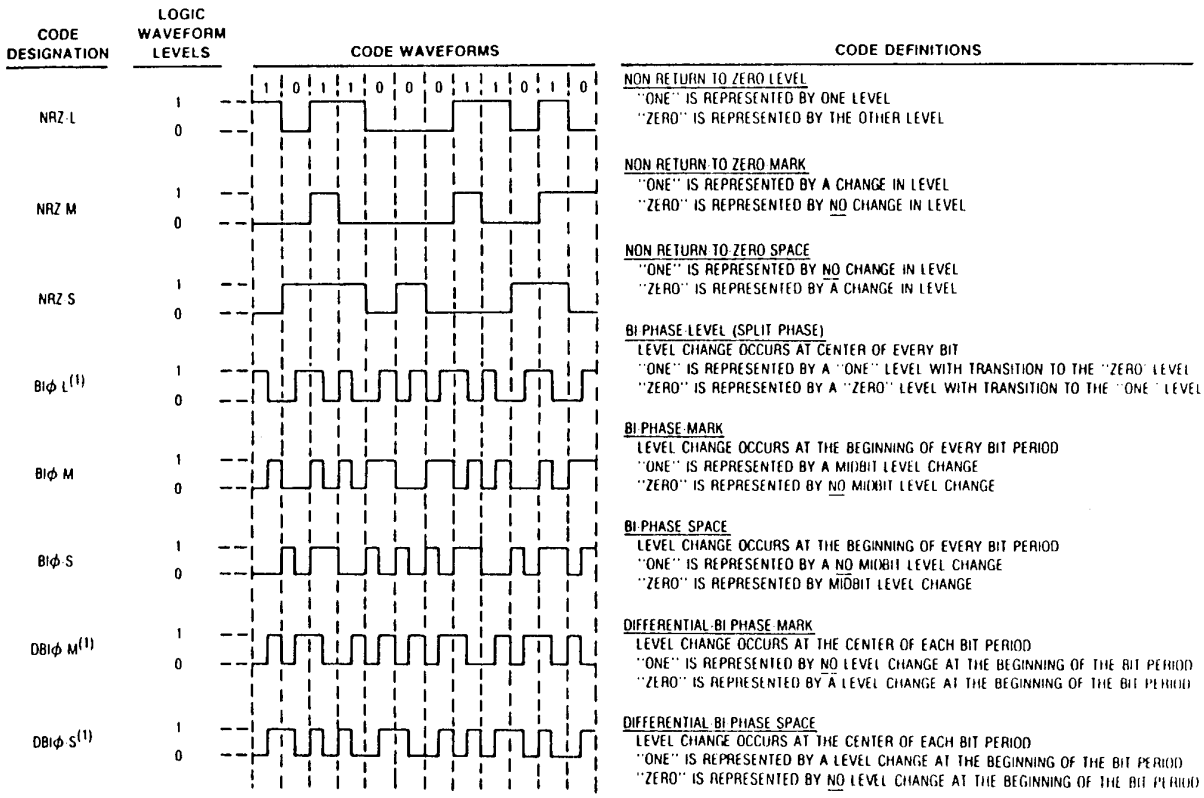

(1) These codes may be derived from the corresponding NRZ codes by inverting the level for the last half of each bit interval

12.2.2 Multiplexing

The objective of multiplexing is to manipulate the group of N data signals in the airborne telemetry station in such a way that these signals can be combined in a reversible process to one composite signal (multiplexing process). Thus, this composed signal can be transmitted to the receiver via a single transmission channel. In the ground station the composed signal is converted back into the N original data signals. The main error sources with the technique of multiplexing are data signal distortion and crosstalk between the data channels which have to be avoided by proper system design.

Two multiplexing principles are used in telemetry, namely frequency division multiplexing and time division multiplexing.

12.2.2.1 Frequency-division multiplexing

The method of frequency-division multiplexing (see Fig. 12.5) generally makes use of continuous modulation methods, such as AM, DSB, SSB or FM. Each data signal modulates a subcarrier with a different frequency. By proper selection of the subcarrier frequencies, overlapping of the modulation spectra can be avoided. At the receiver end of the transmission link the individual subcarriers are separated by bandpass filters. The data signals are recovered by demodulation of the subcarriers.

Distortion and crosstalk of the data signals generally can be kept low by a good linearity of the transmission channel by a sufficient subcarrier separation and by a sufficient selectivity of the channel bandpass filters. In order to get an equal signal-to-noise ratio for all output data signals a preemphasis must be applied to the amplitudes of the subcarriers within the summing amplifier. This preemphasis depends on the subcarrier frequency, the subcarrier channel bandwidth and the modulation method applied to the RF-channel (for more details see Section 12.3.1).

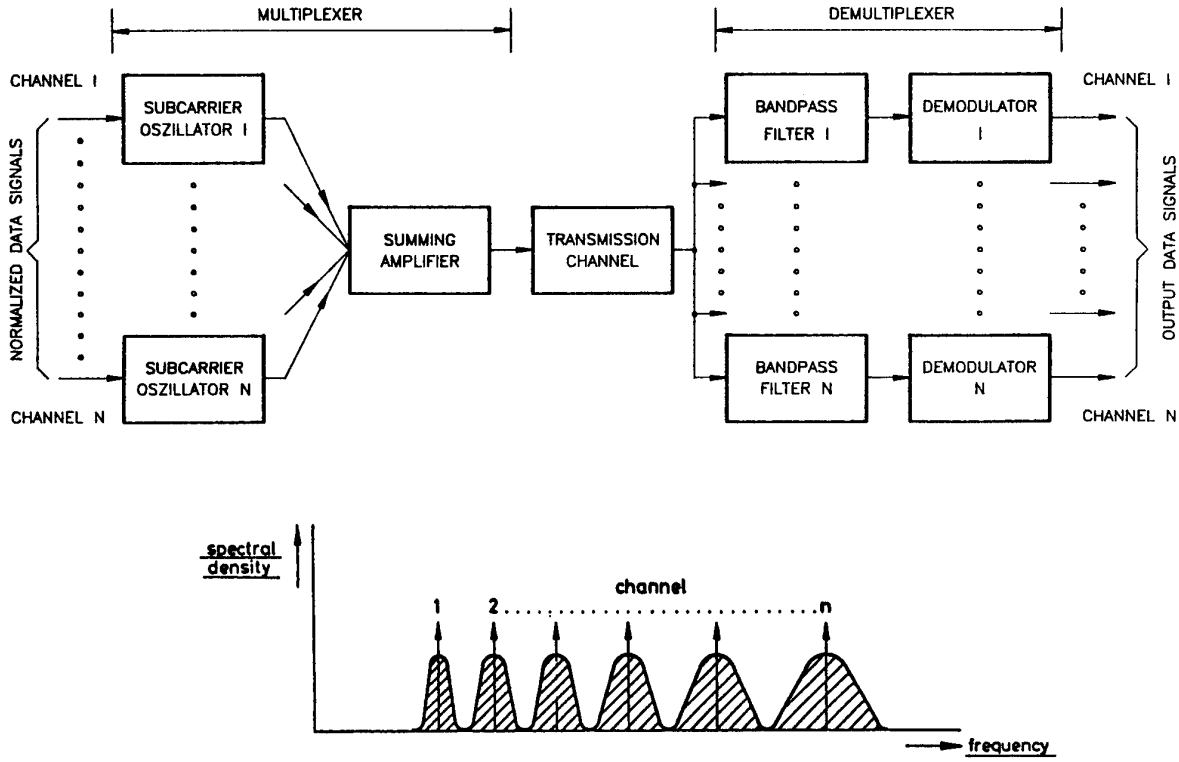

Figure 12.5 Principle of frequency-division multiplexing.

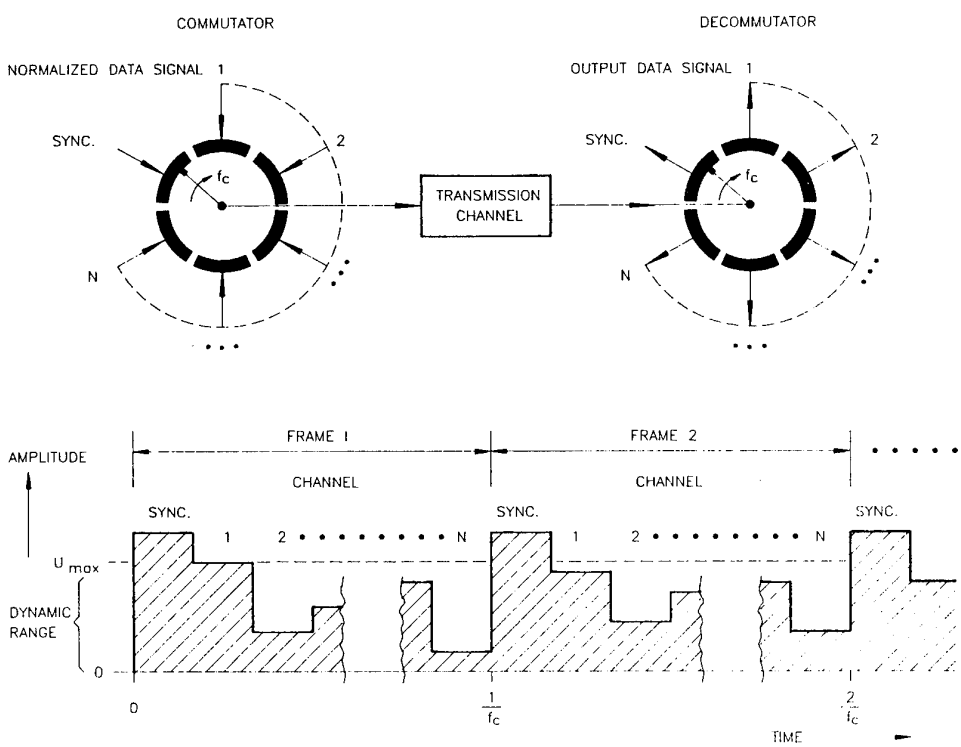

Figure 12.6 Principle of time-division multiplexing.

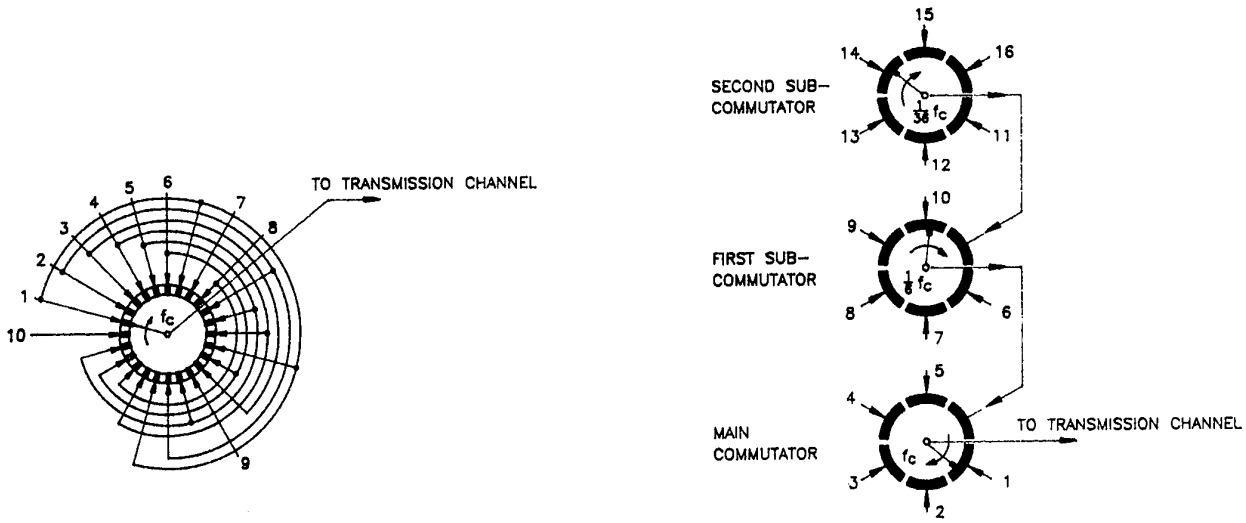

a. SUPERCOMMUTATION

WITHOUT SUPERCOMMUTATION :
24 CHANNELS SAMPLED AT f_c

WITH SUPERCOMMUTATION :

CHANNELS	SAMPLED AT
1, 5	4 f_c
2, 4, 6	3 f_c
3, 8	2 f_c
9, 10	f_c

b. SUBCOMMUTATION

WITHOUT SUBCOMMUTATION :
6 CHANNELS SAMPLED AT f_c

WITH SUBCOMMUTATION :

CHANNELS	SAMPLED AT
1 ÷ 5	f_c
6 ÷ 10	$\frac{1}{5}$ f_c
11 ÷ 16	$\frac{1}{36}$ f_c

Figure 12.7 Examples of supercommutation and subcommutation.

12.2.2.2 Time-division multiplexing

The method of time-division multiplexing is illustrated by Figure 12.6. Generally, this method makes use of pulse modulation methods, such as PAM, PDM, PPM, and PCM. The illustration in Figure 12.6 is based on PAM.

A commutator, e.g., a rotary switch, samples n different data signals with the same sampling frequency f_c, but at consecutive points in time. Thus a train of non-overlapping pulses is generated which may be decommutated by a synchronously running switch at the receiver end of the transmission channel. In order to obtain the required synchronism, a synchronisation signal must be inserted in the pulse train, which can be detected by the decommutator and can be used for synchronizing the position of the switch. Therefore, the parameters of the synchronization pulse, i.e., amplitude or width, must be chosen differently from those of the data pulses. In Figure 2.6 the amplitude is outside the dynamic range of the data pulses. Sometimes a combination of pulses is used in order to get error-free synchronisation. For more details see Section 12.3.2.

For the sake of bandwidth optimisation, a premodulation lowpass filtering has to be applied to the multiplexer output signal before it modulates the RF transmitter. By this means the steep edges of the pulses are rounded and the width of the pulse spectrum is reduced. The optimum corner frequency of the premodulation filter depends on the pulse rate of the multiplex pulse train and the type of modulation. Further, crosstalk due to insufficient corner frequencies must be avoided. (Details see Section 12.3.2).

Time-division multiplexing makes use of the available transmission channel bandwidth very effectively. Moreover, it allows a simple exchange between data channel bandwidth and the number of channels by supercommutation and subcommutation techniques. Both methods are shown in Figure 12.7.

Supercommutation increases the sampling frequency of a channel by sampling the data signal more than once per frame. This can be done by paralleling some channels of the commutator. Obviously, the number of channels decreases. The example in Figure 12.7(a) shows the substitution of 24 channels with a sampling frequency of f_c by 10 channels with different sampling frequencies ranging from f_c to $4 \cdot f_c$.

Subcommutation means the decrease of the channel sampling frequency by substituting one channel of the main frame sampling frequency f_c by n channels of a subframe using a sampling frequency f_c/n. The example in Figure 12.7(b) shows the increase of the number of channels from 6 channels using a sampling frequency f_c to 16 channels using sampling frequencies ranging from f_c down to $f_c/36$ by means of two subcommutation processes in cascade. It should be mentioned that mechanically rotating switches as drawn in Figures 12.6 and 12.7 are hardly used any more in flight test systems. Electronic switches are now usual.

12.2.3 The radio frequency link

The r.f. link connects the output of the airborne multiplexer and the input of the demultiplexer on the ground. Because of the following reasons, relatively high transmission frequencies must be used:

(a) The electrical length of an antenna must be a significant fraction of the wavelength in order to obtain a reasonable radiation efficiency. Thus, the size restrictions for airborne antennas require wavelengths smaller than about 3 *m* (frequencies greater than 100 MHz).

(b) The high bandwidth required for data transmission is only available at high frequencies.

According to the IRIG-standards in the USA the following frequency bands are with certain restrictions available for telemetry (for more details see Ref. 12.6).

(a) 225- to 260-MHz band

- 16 channels for special military applications can be made on a nonprotective basis.

(b) 1435- to 1535-MHz band:

- 100 channels. Channel center frequency spacing in increments of 1 MHz (narrow band channels)
- medium band channels (3-MHz bandwidth) can be inserted in the channel plan by omitting the adjacent narrow band channels or by keeping a medium band channel spacing of 3 MHz
- wide band channels can be provided by omitting five adjacent narrow band channels below as well as above the wide band center frequency or by keeping a wide band channel spacing of 10 MHz.

(c) 2200- to 2300-MHz band:

- 100 narrow band channels in increments of 1 MHz
- medium band channels (3-MHz bandwidth) can be used by omitting the adjacent narrow band channels or by keeping a medium band channel spacing of 3 MHz
- wide band channels can be used by omitting five adjacent channels below as well as above the wide band channel center frequency or by keeping a wide band channel spacing of 10 MHz.

(d) 2310- to 2390-MHz band:

- 80 narrow band channels in increments of 1 MHz
- medium band channels (3-MHz bandwidth) can be used by omitting the adjacent narrow band channels or by keeping a medium band channel spacing of 3 MHz
- wide band channels (5-MHz bandwidth) can be used by omitting two adjacent channels below as well as above the wide band channel center frequency or by keeping a wide band channel spacing of 5 MHz.

This frequency allocation plan in general is true for the USA. In Europe the situation is different because of different usage of frequency bands in the European countries. In comparison to the above mentioned frequency bands ((a) to (d)) it can be stated:

(a) no frequencies available since 1/92

(b) for military applications a few selected channels can be made available by the responsible authorities

(c) no frequencies available

(d) no frequencies available

On the other hand, in the frequency band 2400–2500 MHz telemetry channels can be made available in some countries, narrow band, and medium band as well as wide band, but not on an exclusive basis. This frequency band must be shared with medical and industrial appliance. However, as the situation may differ in Europe, contact relevant authorities in your country for more information. Also the flight-test centers might be a good address.

Now, some general considerations on electromagnetic wave propagation, relevant to telemetry, will be given.

The higher the frequency of an electromagnetic wave, the more its propagation resembles that of light. The useable range between the airborne and the ground terminals is limited by the line of sight if, in a first approximation, the diffraction is neglected. For telemetry frequencies this can be done with good approximation. Within the line of sight the formula for wave propagation in free space is a good approximation, provided the heights above ground of the transmitting and the receiving antennas are at least several wavelengths.

The line of sight D_o can be calculated by using the formula

$$D_o = 2{,}28\ (\sqrt{h_1} + \sqrt{h_2}) \tag{12.4}$$

where D_o = the distance in *km*

h_1 = the height of the transmitting antenna (in the aircraft) in feet

h_2 = the height of the receiving antenna above the ground in feet.

For three different heights h_2, this formula has been displayed in Figure 12.8 by the dashed lines. Good data reception can only be expected for distances D between aircraft and ground station satisfying the condition

$$D \leq D_o \tag{12.5}$$

Within this range the required radiated transmitter power can be estimated by using the solid curves in Figure 12.8. Two auxiliary parameters δ_1 and δ_2 are used. In a logarithmic scale we have

$$\delta_1 = 10 \cdot \log \frac{G_T}{L} \cdot \frac{P_A}{P_R} \cdot A_R \tag{12.6}$$

$$\delta_2 = 71 + 20 \cdot \log D \tag{12.7}$$

G_T is the gain of the transmitting antenna, L the product of losses (cable, mismatching, minima of radiation pattern), P_A and P_R are the transmitted power and the required minimum receiver input power, respectively, for a given telemetry system, A_R the effective area of the receiving antenna in square meters and D is the distance between the antennas in km. δ_2, measured in decibels, indicates the attenuation of the transmitted wave as a function of the distance D. In order to obtain good reception, this attenuation must be overcome by δ_1, which contains those parameters which are independent of the distance D. However, with respect to fading effects, which are not taken into account by equation (12.7) (see below) an additional safety factor of about 10 dB should be maintained.

Thus a supplementary condition to equation (12.5) is

$$\delta_1 \geq \delta_2 + 10\text{dB} \tag{12.8}$$

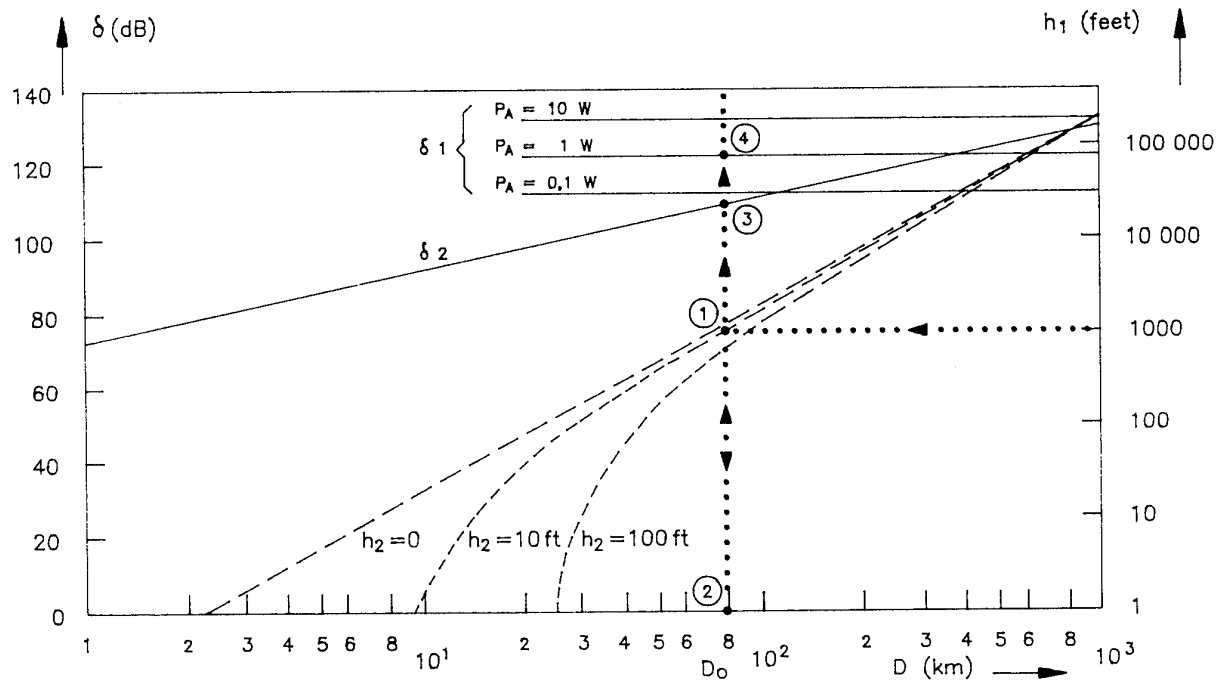

Figure 12.8 Simplified range calculation chart.

The plot of equation (12.6) in Figure 12.8 is based on a PCM/FM-system using an IF-bandwidth of 1 MHz and the parameters $G_T = 1$; $L = 10$; $P_R = 1 \cdot 10^{-13}$ W; $A_R = 1\ m^2$ and transmitter powers P_A of 0.1 W, 1 W, and 10 W. This is often a good approximation to the practical conditions.

Instead of the effective area of the receiving antenna often its gain G_R is specified. The A_R can be calculated by using the formula

$$A_R = \frac{G_R}{4} \cdot \frac{\lambda^2}{\pi} \tag{12.9}$$

(λ is the wavelength).

The use of Figure 12.8 will be made clear by the following example (see dotted lines): for a height of the aircraft of 1000 ft and a height of the receiving antenna of 3.3 m (10 ft) (see point 1), the line of sight is 80 km (point 2).

In order to fulfill equation (12.8), a transmitter power of about 1 W must be applied. (Compare point 3 and 4). The safety margin between δ_1 and δ_2 should be sufficient, especially when diversity reception techniques are used (see the following).

One of the fading effects mentioned above is the so called fading due to multipath propagation. Sometimes the antenna not only receives the wave coming directly from the transmitter but also a reflected wave (reflected from the ground or from buildings), the phase of which is shifted with respect to the direct wave. Depending on the heights and the distances of the antennas the phase shift may reach 180°. Thus the received signal power may from time to time decrease considerably (see Ref. 12.5, Ref. 12.8, and Ref. 12.9).

It should be mentioned also that the curve δ_2 (D) at the limit of the line of sight is too optimistic. Beyond this limit the wave-attenuation increases very rapidly. Therefore, little or no increase in range can be obtained even if the transmitter power is substantially increased. On the other hand, the example shows that within the line of sight reliable communication with relatively low transmitter power is possible.

An effective way to overcome the difficulties caused by fading is to use diversity reception techniques. This technique uses two r.f. receivers (see Fig. 12.9). Each receiver is connected to a diversity coupler, which picks up waves of different polarization (polarization diversity), of different frequencies (frequency diversity) or at different locations (space diversity) from at least two or more antennas. A predetection or post detection

combiner at the output of the receivers combines the weighted sum of both input signals. The weighting coefficients are controlled by the signal-to-noise ratio of the two receiver inputs, in such a way that the coefficient approaches 1 for a good signal and 0 for a bad signal. Because of the different conditions of wave reflection it is not very probable that a loss of signal occurs at both inputs simultaneously. The probability of good reception, therefore, is substantially increased (see Ref. 12.5 and Ref. 12.9).

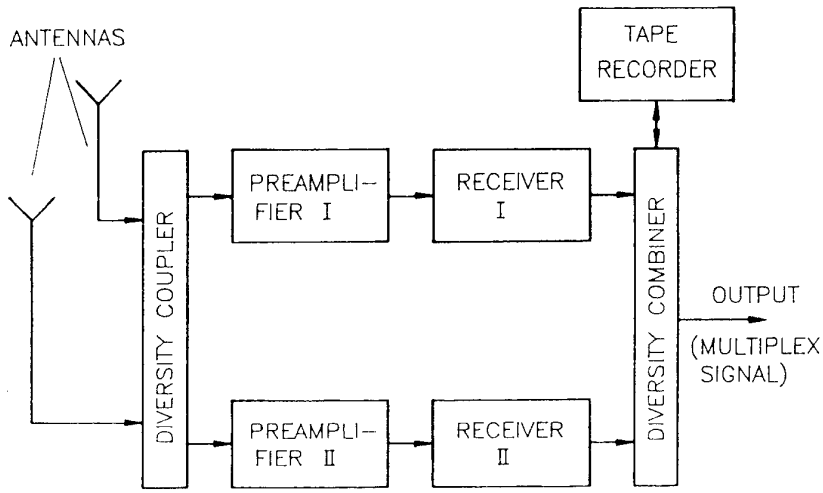

Figure 12.9 Principle of diversity reception.

The onboard transmitting antennas are mounted in a fixed position with respect to the vehicle. The axes of these antennas may, therefore, have different directions with respect to the ground during a flight. Therefore, an omnidirectional radiation pattern is desirable but cannot be achieved exactly. The freespace radiation patterns of the antenna systems that can be used on aircraft always show minima. In addition, the aircraft itself distorts the radiation pattern. Parts other than the antenna may re-radiate signals (parasitic radiation) which will interfere with the original signal. Furthermore, at some attitudes of the aircraft, the wing or the fuselage may intercept the radiation to the ground station (shadow effects). Therefore, the layout of the airborne antennas must be done very carefully, taking into account the expected attitudes of the aircraft during flight (see Ref. 12.8).

The airborne antennas are often $\lambda/4$-stub or blade antennas, which have a linear polarization. Most of the ground receiving antennas are circularly polarized in order to obtain a reception independent of the orientation of the airborne antenna. Turnstile or helical antennas are used for the 225–260 MHz band frequencies; circularly polarized feeds with a parabolic reflector are preferred for the higher frequency bands. For the latter frequencies higher gains G_R must be used than for the lower frequency band in order to get the same effective antenna area A_R. This is shown by equation (12.9). Considering the wavelength ratio of the highest and the lowest telemetry frequency of more than 10 a gain ratio of about 10 must be provided. The corresponding higher directivity at the higher frequency may cause problems with manual tracking of the receiving antennas, especially with aircraft which fly at high speed near the ground antenna (high angular velocity). Therefore, automatic tracking (e.g., monopulse tracking) often is preferred, despite the higher complexity of the ground station.

At the receiving end of the telemetry link superheterodyne receivers with plug-in techniques are mostly used. Therefore, the receivers can easily be matched to different telemetry systems by choosing the proper tuning heads, intermediate frequency filters, and RF demodulators. In order to obtain good receiver input sensitivity (low value of P_R in eq. (12.6)) the noise figure of the receiver must be kept low. A low-noise preamplifier situated at the antenna is recommended, if it is not possible to locate the antenna near the receiver (see Fig. 12.9). The low-noise figure of the preamplifier then determines the noise figure of the receiving system. Special tuning heads are available for standardized telemetry receivers (IRIG-standard). Frequency converters of the antenna output can be used to convert non-standard frequency bands into an IRIG standardized band. Most telemetry receivers can be equipped with an accessory unit for postdetection or predetection diversity combining.

12.2.4 Ground data processing, recording, and display

The recovered data signals on the ground must be manipulated with respect to different aspects. They have to be

- displayed for quick-look and documentation
- processed, on-line as well as off-line, in order to get the wanted information out of the mass of raw data
- stored for off-line data processing and repetitive trials.

These different aspects shall be explained shortly by the use of Figure 12.10.

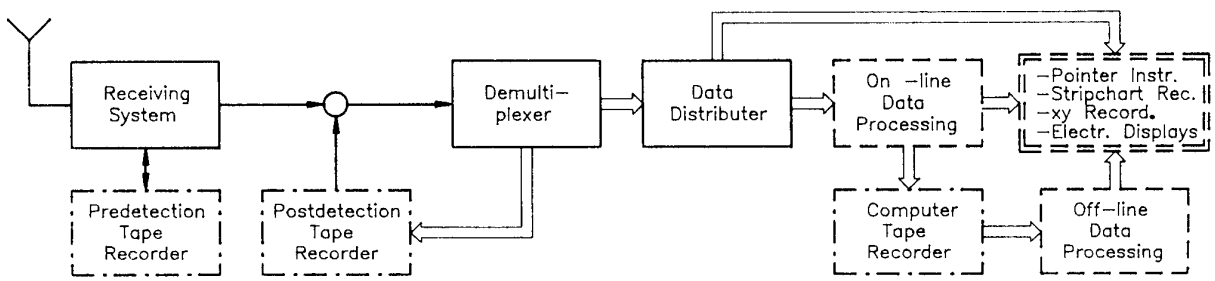

Figure 12.10 Block diagram of ground data processing, recording and display.

Display: Quick-look display usually is done with pointer instruments as well as with strip-chart recorders, X–Y recorders, and electronic displays. Data signals containing frequency components higher than 100 Hz may be recorded by oscillographic recorders. These papers recorders have the advantage of being both a display and a storage equipment. On the other hand, the storage capacity does not meet the high requirements of modern flight tests. Moreover, the stored information can only be converted back into an electrical signal with great difficulty.

Data processing: Selected sets out of the quantity of demultiplexed data must be processed on-line or off-line, respectively, in order to separate the essential information of a flight test from the large amount of raw data which are of little or no interest for the flight-test engineer.

As the data measured in the aircraft are immediately available in the ground station, on-line data processing makes it possible to gain relevant test results while the flight is in progress. Thus, modifications to the flight test programme can be made during the flight. Experience has shown that this can reduce the number of flights required in a test programme and can increase the efficiency considerably.

Often, in addition to on-line data processing, off-line data processing must be used. Limitations with respect to the available on-line computing operations may restrict the on-line processing to those parameters which are essential for the successful control of the flight test. Detailed investigations with time consuming computations then have to be done off-line.

Nowadays, the computers in the ground station are exclusively digital. Besides the tasks of on-line/off-line data processing, they can be used advantageously for other tasks in the ground station such as

- decommutation of PCM signals
- automatic control of the receiving antenna, applying automatic search patterns with high-directivity antennas and switch-over to autotracking when acquisition is obtained etc.
- setup of the telemetry system units (receivers, decoders, distributors).

The problems of on-line and off-line data processing are discussed in more detail in Chapter 10.

Recording: For recording of the received data signals magnetic tape recorders have excellent properties and they are therefore standard equipment in telemetry ground stations. Mainly the method of post-detection recording is used, in which the frequency-multiplexed signal (FM/FM-system) or the time-multiplexed signal (PAM/-FM and PCM/FM system) at the output of the IF-demodulator is recorded on one track of the tape recorder in

the direct mode or in the FM mode. The demultiplexing is done during playback. This method allows the recording of a great many of data channels. However, it is also possible to do the demultiplexing of the received signal on-line, and to record the individual data signals directly on different tracks of the tape recorder. This method obviously is limited by the maximum number or tracks of the recorder (generally 14 tracks with 1-in. tape width).

With the availability of recorders with continuous recording capabilities up to frequencies of 2 MHz the direct recording of the receiver intermediate frequency (third IF; maximum 900 kHz; see Ref. 12.7) prior to demodulation became possible. The main advantage of this so called predetection recording is that operation as well as maintenance of ground stations is simplified, especially for those using several telemetry methods (FM/FM, PAM/FM, PCM/FM). This is the case, because the recording method is the same regardless of the type of multiplexing used. In post-detection recording, on the other hand, the recording method (direct recording or FM recording) must be matched to the type of multiplexing.

Another benefit of predetection recording is given with respect to the signal-to-noise ratio, for it is advantageous to record the signal as early in the transmission chain as possible. The optimization of the playback channel with respect to the signal-to-noise ratio (e.g., varying the IF bandwidth and consequently the demodulator threshold) needs to be done prior to reception but can be performed later by repetitive trial and error, while, in post-detection recording, the IF bandwidth must be chosen on the basis of an expected RF signal bandwidth before the test begins.

The bandwidth requirement of the predetection recording process, however, supercedes that of the post-detection recording process by far. Therefore, in high data rate systems only post-detection recording can be used.

In connection with on-line data processing a further method of data recording is important. Those data, which are of relevance to the situations of the flight test to be investigated are fed to the ground on-line computing system (see above). Here they are transferred into a computer compatible format and stored on a computer compatible tape recorder. These data, in general, are sufficient for on-line as well as for off-line data processing. Thus, off-line investigations can be done by using these data, i.e., the telemetry system itself is not needed. Only in the case of unexpected situations like failures in the modules to be investigated will the original tape containing all telemetered data be used and the demultiplexer of the telemetry system is needed.

12.2.5 Encryption of data information

In flight testing it is often required to keep the test data and results secret. But, as the telemetry signals are radiated in the free space, the reception of the r.f. signal by unauthorized parties can not be avoided. In contrast to the reception of speech as well as of pictures or written text, however, telemetry signals are subject by nature to a certain secret coding. In the case of PCM the receiver has to know the frame length, the synchronization pattern, the word length, the physical representation of the data words, and the scaling factors in order to make the message readable. But, most of these parameters can be found out by using more or less intelligent methods. Only the physical meaning of the data words and the scaling factors are difficult to deliberate.

A further protection of the data can be obtained by using the methods of encryption. Very refined methods have been developed (see Ref. 12.10). A relatively simple principle is shown in Figure 12.11.

It uses an n-stage shift register and a feedback network of modulo 2 adders (exclusive OR-gates), with the coder as well as with the decoder. The coder transforms the PCM data bit stream into a pseudo-random bit sequence, while the decoder re-transforms this bit sequence into the original bit stream. The main advantage of the chosen principle is that no special synchronization signals are needed. When the decoder is switched on, at the latest, after n clock periods the decoded bit stream is error-free.

The switches in the coder and the decoder can have the state "on" or "off." In order to get a correct decoding, however, the switches in the decoder must be set exactly in the same pattern as in the coder. Therefore, the authorized receiver must know the length n of the shift register and the switching pattern of the coder. There are 2^{n-1} different possibilities.

A further refinement of this method can be obtained in the following way. By use of programmable switches the switching pattern can be changed several times during a flight test. The change can be initiated by the contents of a frame counter at pre-programmed numbers. As the frame counter word is transmitted with the telemetry data frame the change of the switching pattern can also be done by the authorized receiver in the ground station. Thus, the decoding of the coded data stream by unauthorized receivers is still more difficult.

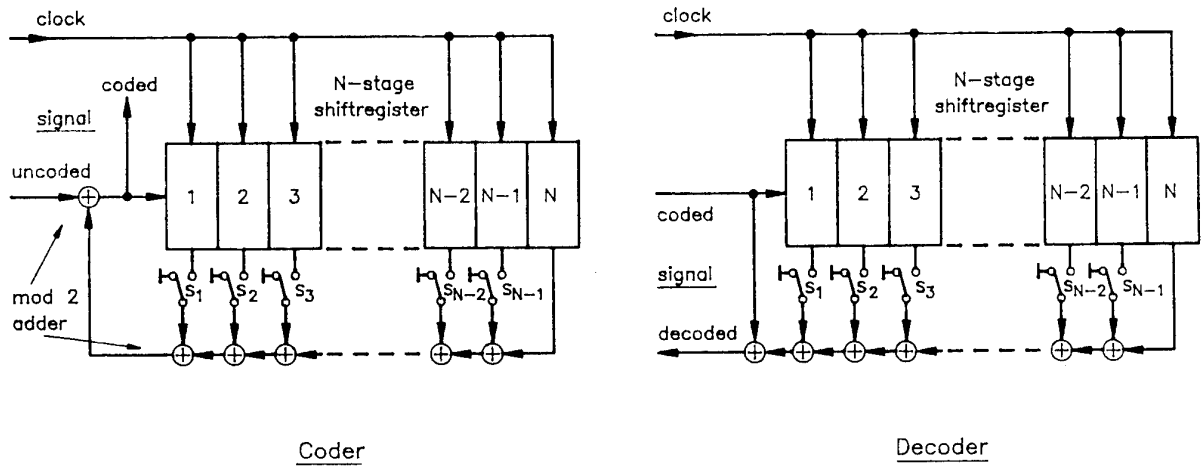

Figure 12.11 PCM-data encryption by randomization of data bits.

The main advantage of the described method is its simplicity and its ability of self synchronization. One drawback, however, should be mentioned. In the case of bit errors in the received data stream, for instance due to channel noise, the bit error rate is multiplied in the decoder by a certain factor. This multiplication factor is $m+1$ where m is the number of feedback paths in use. If one switch in the coder/decoder is closed, i.e., $m = 2$, the multiplication factor is 3. Thus, it is not recommendable to use many feedback paths simultaneously. This restriction can reduce the number of coding possibilities considerably.

It should further be mentioned that the described coder/decoder principles in a special configuration are used for recording of NRZ-L coded PCM-signals on magnetic tape (see Ref. 12.11) in order to randomize the data and to reduce by this way dc-components in the signal.* In this application $n = 15$ is chosen and only the path S_{n-1} is closed. The bit error multiplication factor is 3.

Another method, recommendable for encryption of telemetry data, is the use of spread spectrum techniques. At the cost of raised RF spectrum width, some further advantages can be obtained, besides the encryption effect, e.g.,

- rejection of background noise and of interference signals
- rejection of jamming signals
- independence of the type of telemetry system; analog systems can be used as well as digital systems.

The basic principles used in spread spectrum techniques are phase hopping and frequency hopping. For more details see (Ref. 12.11).

12.3 IRIG-STANDARDIZED TELEMETRY SYSTEMS

The layout of telemetry systems used for flight testing, follows nearly exclusively, after the standards of the Inter Range Instrumentation Group (IRIG, see Ref. 12.7). These standards were continuously adapted to the practical needs and the state of the art within a period of a few years. Thus, standards were extended with respect to the number as well as the bandwidth of available data channels. On the other hand, some systems like PDM/FM and DSB/FM were removed from the standards. The latest version of the standards contains three basic telemetry systems, which are shortly described in the following. Combinations of the basic systems are also possible.

12.3.1 FM/FM Systems

These systems make use of frequency modulated subcarriers for multiplexing (frequency division multiplexing, see paragraph 12.2.2.1). The multiplexer output signal modulates the RF carrier also by frequency modulation. Two different subcarrier channel plans are established. In the first plan the bandwidths of the available channels

* The use of a baseline restoration circuitry with the bit synchronizer is mandatory.

increase in proportion to the center frequency. In the second plan the bandwidths of the data channels are constant and do not vary with the center frequency.

The channel plan of the Proportional Bandwidth FM Subcarriers (PBW) encloses 25 channels. The subcarrier center frequencies range from 400 Hz to 560 kHz. In order to get a good adaptability to varying data bandwidth requirements three groups are established using different frequency deviations; namely ±7.5% of ±15% and ±30% of the subcarrier frequency. When the higher frequency deviations are used the number of channels must be reduced in order to prevent crosstalk between adjacent channels.

The channels of the three groups also can be used in a mixed configuration. Then, the omission of frequencies must be done in accordance to the type of neighbour channels.

The Constant Bandwidth FM Subcarrier (CBW) channel plan presents seven groups. The data channels in each group have equal frequency deviation and, in consequence, equal data bandwidth.

In the first group (A channels) the frequency deviation is ±2 kHz and the nominal frequency response is 0, 4 kHz. The maximum number of channels in this group is 21.

In the second group (B channels), the deviation as well as the frequency response is doubled. In order to avoid channel interference some carrier frequencies of the group A must not be used for group B channels. Eleven group B channels are available (32 B to 192 B; the numbers indicate the carrier frequency in kHz).

By using the same principle further groups (C to G) are derived. The highest defined subcarrier frequency is 1024 kHz. The highest nominal data frequency response of 25,6 kHz is provided by channel 1024 G.

Tape Speed Control and Flutter Compensation. The received data signals in general are stored on magnetic tape in the ground station. Because in FM systems, the data information is translated into a frequency deviation the tape speed must be exactly the same during recording and reproduce. Every tape speed difference will cause an error in the reproduced signal.

It can be distinguished between two groups of errors:

(a) long-term tape speed errors, which cause frequency offsets

(b) short-term tape speed error or flutter, which cause noise in the demodulated data signal

The long-term tape speed error can be minimized by applying a reference signal to the tape during record. During reproduce this reference signal is used to servo-control the reproducer tape speed.

The same method can be used for compensating the flutter components of the tape speed error. However, in this case a special discriminator demodulates the erroneous reference frequency, thus generating an error signal. This signal is fed to the flutter compensation input ports of the data discriminators in order to compensate the flutter noise. For more details see Ref. 12.6.

12.3.2 PAM/FM Systems

PAM/FM is a comparatively simple and effective analog telemetry method. The analog data signals are sampled by the PAM encoder and serially ordered to a data frame (time division multiplexing). This multiplex signal then frequency modulates the RF carrier. The IRIG-standards distinguish between two different PAM patterns. These are the 50% duty cycle PAM and the 100% duty cycle PAM. They are also called return to zero PAM (RZ-PAM) and non return to zero PAM (NRZ-PAM). For more details see Ref. 12.6.

12.3.3 PCM/FM Systems

Because of their accuracy, efficiency, and flexibility nowadays PCM/FM-systems are in wide-spread use (Ref. 12.12). The data signals are multiplexed by the time-division method (see Section 12.2.2.2) and encoded by PCM (see Section 12.2.1.2). The serial bit stream then frequency-modulates the RF-carrier. Sometimes, however, phase modulation (i.e., a derivative of frequency modulation) is used.

12.3.3.1 Overall system considerations

The basic functional blocks of the PCM encoding and decoding systems are illustrated by Figures 12.12 and 12.13, respectively.

In Figure 12.12 the data encoder is shown. Two groups of data signals can be applied to the input connectors, i.e., analog signals and digital signals. The normalized analog signals are sampled and aligned by an analog multiplexer. An A/D-converter converts the analog samples into bit-parallel digital words which are fed into the merger. The second group of data signals consists of parallel digital data words. Also signals from digital data buses (see Chapter 9.3.2.3 and 9.3.2.4) can be integrated into the set of digital data words. All these are multiplexed by the digital multiplexer. The bit-parallel and word-serial output signal of this multiplexer also is fed into the merger, which combines the series of bit-parallel data words stemming from the digital sources with those from the analog sources. The merger is followed by a parallel-to-serial converter in order to generate a word-serial and bit-serial bit stream. Finally, a code converter provides the appropriate codes for RF-modulation and magnetic tape recording, respectively (e.g., biphase level and scrambled NRZ). All these different processes must be performed in exact synchronism. A system control unit takes care of this.

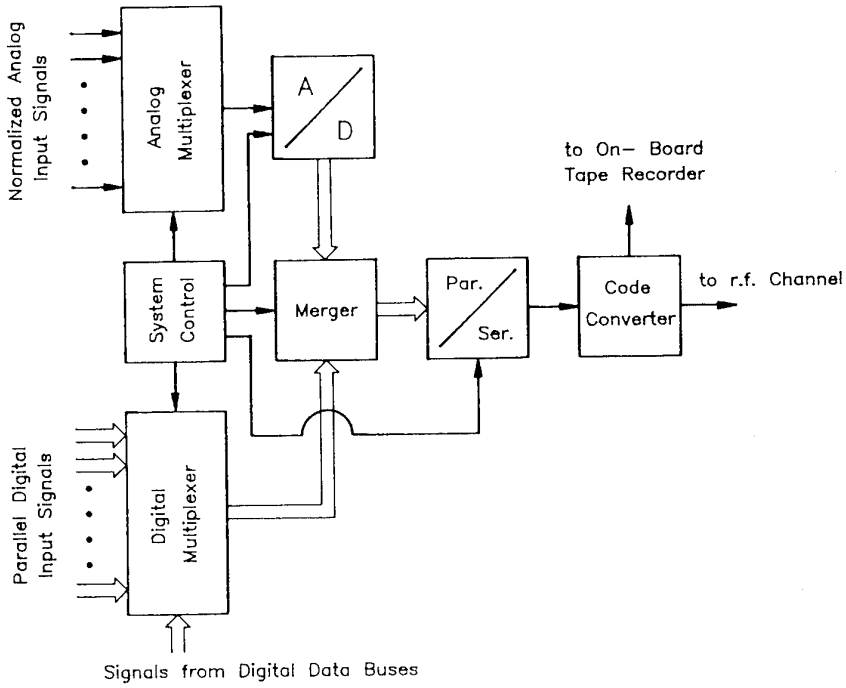

Figure 12.12 PCM data encoder.

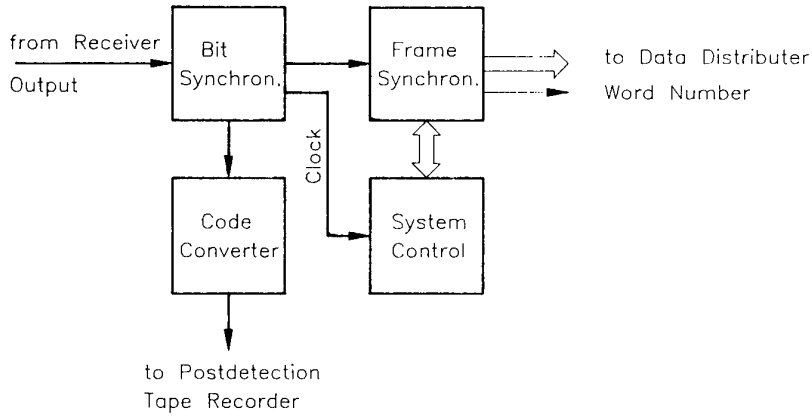

Figure 12.13 PCM data decoder.

Table 12.2 Optimum frame synchronization patterns for PCM telemetry (IRIG 106–93).

Pattern Length	Patterns										
7	101	100	0								
8	101	110	00								
9	101	110	000								
10	110	111	000	0							
11	101	101	110	00							
12	110	101	100	000							
13	111	010	110	000	0						
14	111	001	101	000	00						
15	111	011	001	010	000						
16	111	010	111	001	000	0					
17	111	100	110	101	000	00					
18	111	100	110	101	000	000					
19	111	110	011	001	010	000	0				
20	111	011	011	110	001	000	00				
21	111	011	101	001	011	000	000				
22	111	100	110	110	101	000	000	0			
23	111	101	011	100	110	100	000	00			
24	111	110	101	111	001	100	100	000			
25	111	110	010	110	111	000	100	000	0		
26	111	110	100	110	101	100	110	000	00		
27	111	110	101	101	001	100	110	000	000		
28	111	101	011	110	010	110	011	000	000	0	
29	111	101	011	110	011	001	101	000	000	00	
30	111	110	101	111	001	100	110	100	000	000	
31	111	111	100	110	111	110	101	000	010	000	0
32	111	111	100	110	101	100	101	000	010	000	00
33	111	110	111	010	011	101	001	010	010	011	000

Figure 12.13 illustrates the basic functions of the PCM data decoder. At the RF-receiver output the serial PCM bit stream is available. With bad receiving conditions, however, the received bit stream may be contaminated considerably by noise compared to the transmitted bit stream. It is the task of the bit synchronizer to decide for each noise-contaminated bit to represent a one or a zero. At the output of the bit synchronizer the bit stream is noise-free but some bits may be false because of a false decision of the bit synchronizer. However, the probability of false decisions decreases rapidly with increasing S/N ratio at the input of the bit synchronizer.

A second task of the bit synchronizer is the regeneration of the clock frequency out of the noisy bit stream. This clock frequency is needed by the system control unit in order to control the different processes in the frame synchronizer.

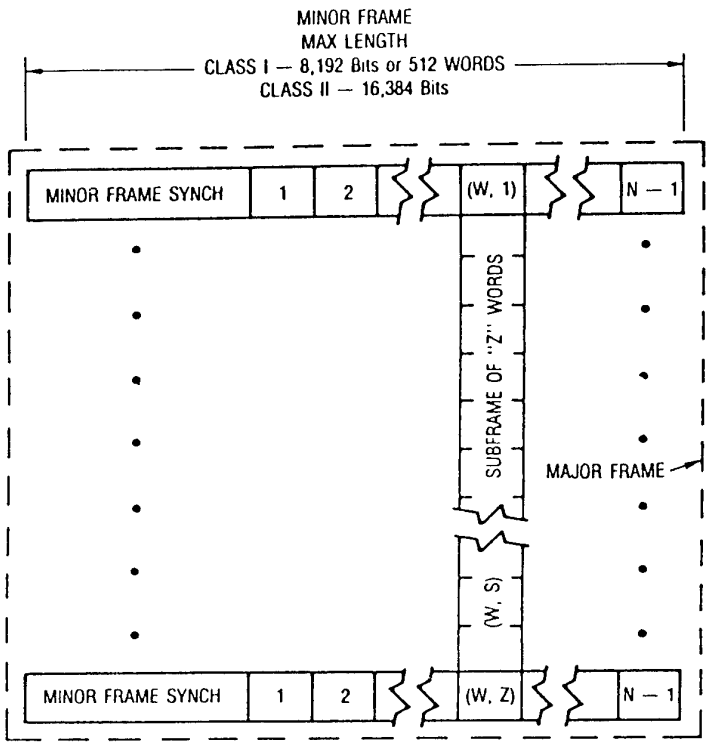

• BY DEFINITION A MAJOR FRAME CONTAINS N * Z WORDS.
"Z" = THE NUMBER OF WORDS IN LONGEST SUBFRAME. (Max.256)
"N" = THE NUMBER OF WORDS IN MINOR FRAME.

• MINOR FRAME SYNCH IS CONSIDERED ONE WORD, REGARDLESS OF LENGTH.

Figure 12.14 PCM frame structure.

The main task of the frame synchronizer is to detect the frame synchronization word which is embedded in the data bit stream. After detection, the consecutive data words in the data frame can be identified easily by counting the clock pulses as the word length is known.

While the bit format in the bit synchronizer as well as in the frame synchronizer normally is NRZ-L, another format must be provided for post-detection tape recording, e.g., biphase, scrambled-NRZ or Miller code. Therefore, a code converter must be provided.

Figure 12.14 illustrates some definitions which are given by the IRIG standards (see Ref. 12.6). The "minor frame" is the basic frame in the system. It contains N words. The first word is the synchronization word. While the N-1 data words are of equal length, the length of the synchronization word can be freely chosen. The recommended synchronization patterns are given in Table 12.2. In general, the stability of synchronization increases with the length of the synchronization word at the cost of data bits. The synchronization process is discussed in some more detail in the next paragraph.

In the last edition of the IRIG-standard two classes of PCM-systems are defined. While the Class I-standards cover the basic and simpler systems which normally are used and are close to the former standards, Class II–standards are new. They cover special and more complicated applications. Therefore, they are not explained in this chapter. If required, see Ref. 12.6.

In Class I PCM systems the upper limit of N is 512 or 8192 bits, whatever is greater. If one or more subframes are used, a major frame can be defined. Supposedly, the longest subframe contains Z words (Z_{max} = 256) the major frame length takes $N \cdot Z$ words.

The synchronization of the subframe can be done easily by the use of a minor frame counter. It starts with number 1 when the first data word of the subframe is taken into the minor frame. Thus, the counter contains the number of the subframe data word. When the counter number equals Z a counter reset takes place.

12.3.3.2 Special system aspects

For the bit detection process in the bit synchronizer in general two methods are in use, i.e., the filter and sample method and the integrate and dump method. With the first method the noise-contaminated bit stream is passed through a low pass filter having a corner frequency of 0,7 × bit rate*. Towards the end of the bit period the filter output signal is sampled and the decision for a one or a zero is derived from this sample. With the second method the noisy bit stream is fed into an integrator which is set to zero at the beginning of a bit interval by a suited timing signal. The one/zero decision is derived from the amplitude of the integrator output signal at the end of the bit interval right before the signal is set back to zero again. The required timing signals for both methods are gained from the noisy bit stream by a phase lock loop (PLL) bit rate generator.

The precise detection of the location of the frame synchronization word is of utmost importance for the decommutation process in PCM. Displacements in the order of half a bit disturb the correlation of bits and their positions in the data words which leads to a complete system breakdown. Therefore, powerful synchronization methods must be applied. Figure 12.15 shows the principle of frame synchronization by correlation. The selected synchronization word is stored in a correlator. The serial bit stream which was cleaned from noise in the bit synchronizer is fed into a shift register under control of the bit clock. A comparator compares the status of the shift register cells for each shift step with the corresponding cells in the correlator. When the contents of allocated cells are equal the comparator output signal level is raised by one step for each correspondence. Thus, the maximum level is M steps, supposing a synch word length of M bits. This situation occurs when the exact synchronization word is loaded in the shift register. A shift of one bit will cause a drastic reduction of the cross correlation function because the recommended synchronization patterns are selected with respect to this behavior. The comparator output signal is fed to the threshold detector. This unit provides the frame synchronization pulse, when a preselected threshold is surpassed. The highest allowed threshold level is M-1 steps. However, with regard to bit errors caused by the noisy transmission channel a few bit errors should be allowed. Thus the threshold level would be M-1-k steps, when k is the number of allowed bit errors in the synchronization word.

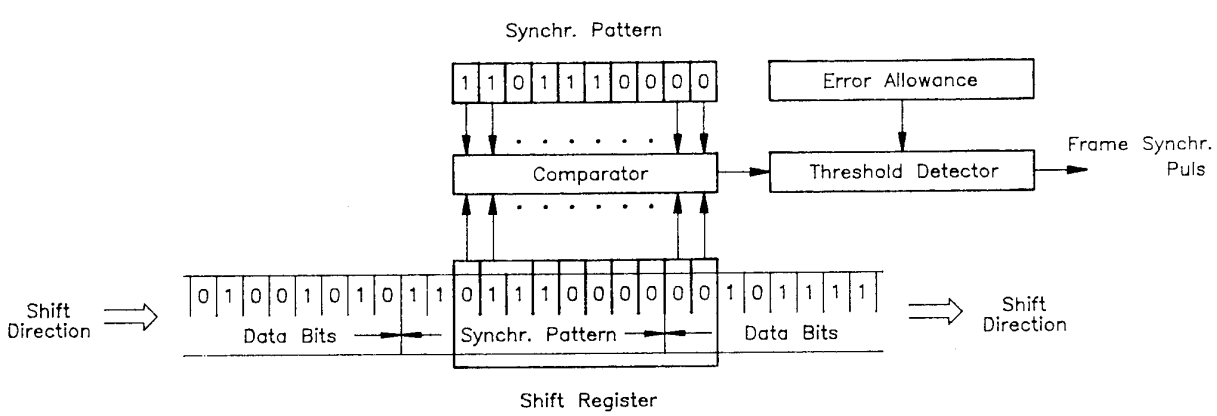

Figure 12.15 Frame synchronization.

* NRZ-bit format presupposed.

In Figure 12.16 some more details are visualized. For a 22-bit pseudo random bit pattern which is embedded in the data bit stream, two cross correlation functions are plotted. In the first case, called best case, it is assumed that the data bits which are loaded in the shift register during the shift process are the complement of the corresponding bits of the loaded synchronization word. In the second case, called worst case, it is assumed that they are equivalent. In reality the cross correlation function must be between the worst case and the best case curve. From Figure 12.16 the following conclusions can be drawn.

1. The correct position of the synchronization word can be identified because of the distinct peak of the cross correlation function at zero shift
2. The same correlation level can occur in principle with mere data bits with regard to the worst case curve. However, the probability of occurrence is very low and decreases with the length of the synchronization word
3. Even the synchronization pattern in the PCM data stream is not error-free, e.g., because of wrong decision of the bit synchronizer at extreme noise situations, an exact detection of the synchronization pattern position can be expected when a few errors are allowed in the frame synchronizer.

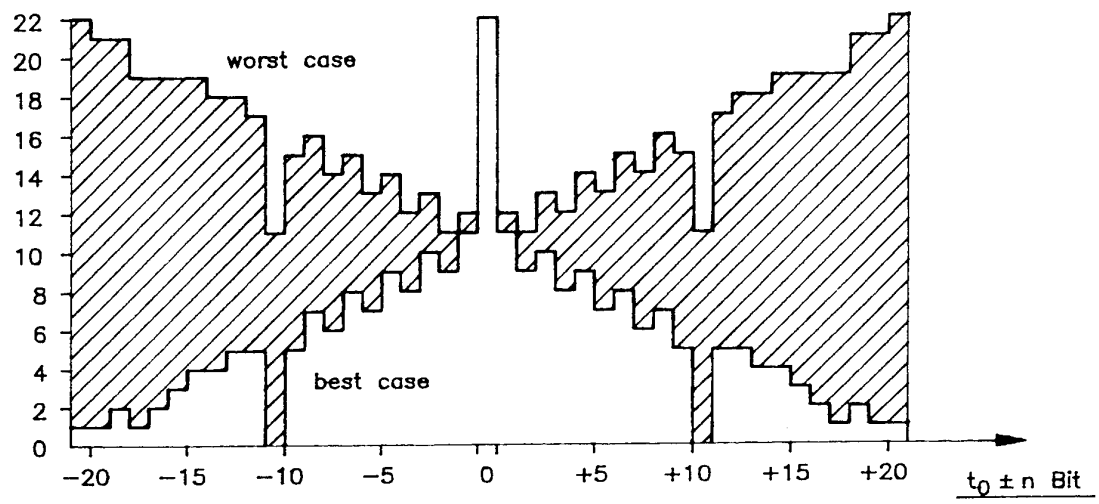

Figure 12.16 Cross-correlation function of the pseudo random bit pattern 11100010010 + complement (22 bit) embedded in the data bitstream.

12.3.4 Hybrid Systems

In order to get a better adaption of the telemetry system to the requirements of the flight test, combinations of the methods which are described in Sections 12.2.1 to 12.3.3 can be advantageous. Thus, a better system performance with respect to number, bandwidth, and accuracy of the data channels can be obtained. This matter will be illustrated in the following by some examples.

Because of the complex structure of hybrid systems a clear nomenclature should be applied. In this paragraph the following form is used

Example: (PAM/FM-FM) / FM

Multiplexing/RF-carrier
method modulation

The combination of multiplexing methods is taken in parenthesis. The RF carrier modulation method is separated by a / from the multiplexing method, as usual. In addition, some more explanations must be given in order to exactly specify the multiplexing method, i.e., RZ/NRZ for PAM and proportional bandwidth (PBW) or constant bandwidth (CBW) for FM subcarriers and the code designation for PCM.

(PAM/FM-FM)/FM Systems: This designation assigns the FM modulation to the r.f. carrier. The multiplexer is split into two parts. One part uses conventional FM-subcarriers (see section 12.3.1). These may be PWB- or CBW-subcarriers. One (or more) of these subcarriers is modulated by a PAM-multiplex signal. Thus, the number of available channels can be enlarged considerably. The following example will illustrate this method.

FM/FM-part	PWB-FM channels 1 to 17; ±7.5% frq. dev.; Modulation Index M = 5; data frequency response from 6 Hz to 790 Hz; 17 channels
PAM/FM/FM-part	PBW-FM channel 18 is modulated by the output signal of an 18 channel/25 frame/s PAM-multiplexer; 16 data channels (+2 synchr.) are available, offering about 5 Hz frequency response each.

Thus, the channel plan of the FM/FM-system is extended to lower frequencies by a set of 16 constant bandwidth channels, offering a frequency response of about 5 Hz.

(PCM-FM)/FM Systems: In this group of systems a PCM/FM-system is combined with an FM/FM-system, utilizing the same RF transmitter.

In a first configuration the PCM part covers the bulk of the channel requirements, while a few wide band FM--subcarrier channels are added in order to process and transmit a correspondent number of high-frequency data. This method is illustrated by Figure 12.17. The low pass filter is tuned to 200 kHz.

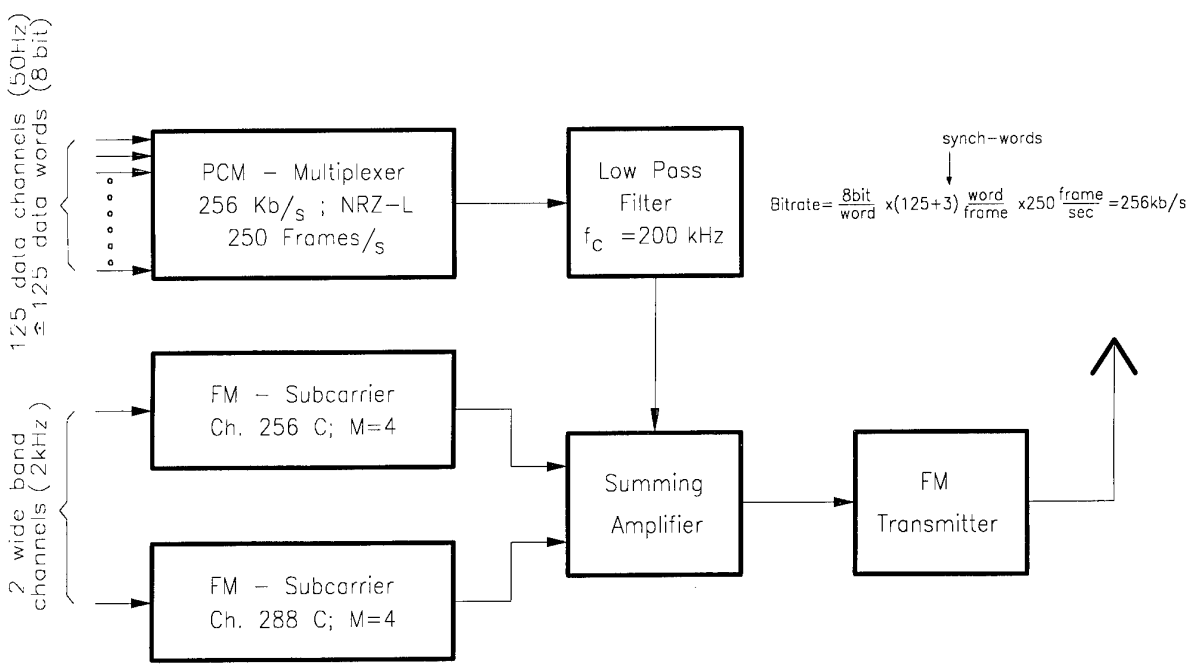

Figure 12.17 Extension of a PCM/FM system by two FM-subcarrier channels (PCM/FM-FM)/FM system.

With only slight modifications a second configuration can be derived from Figure 12.17. The main part is an FM CBW subcarrier system, i.e., to be used for flutter investigations on aircraft. Instead of only two FM-subcarriers a complete set of 11 CBW B-channels, offering a data frequency response of 1 kHz at M = 4, is used. The rest of the data with less demanding frequency response are processed by a PCM-multiplexer with the following features: bit-frequency 26 Kb/s; format NRZ-L; 8 bit/word; 32 words/minor frame; 100 frames/s. When more low-frequency channels are required a subframe can be provided. The low pass filter between the PCM--multiplexer and the summing amplifier is tuned to a corner frequency of 20 kHz.

12.4 AN APPROVED UPLINK-DOWNLINK TELEMETRY SYSTEM

A telemetry system will be described which is very similar to the approved system used for flight tests by the German Aerospace Research Organization DLR in Braunschweig.

In flight testing the origin of the bulk of the data usually arise from sensors onboard the aircraft. These data, analog as well as digital, may be related to the position of the aircraft (from navigational sensors, e.g. INS, GPS, VOR, DME) or to performance parameters of avionic components under test or to house-keeping parameters of the aircraft or to other sources. In general the corner frequencies of these parameters are within the low and medium frequency region. In the system under discussion additionally two wide band channels are provided. The first is used for the transmission of the IRIG-B time code signal and the second carries the onboard intercommunication signal which proved to be a very useful information in the quick-look station on the ground.

However, often there are data sources on the ground the information of which are needed or may be helpful onboard the aircraft. These are data concerning the flight path (from RADAR or Laser tracker) or the wind (direction and speed) or special data out of the ground data processing facility. These parameters, again, are of low to medium frequency contents. In the system under discussion two wide band channels are provided also in the uplink. These are used for the IRIG-B time code channel and the speech signal of the ground control center, which may be helpful for the flight test engineer onboard the aircraft.

As previously discussed (see Section 12.2.3) in flight testing often severe problems arise due to shadowing of the onboard antennas and due to multipath wave propagation. In order to get a reliable data connection, with the uplink as well as with the downlink, diversity techniques are applied extensively. In the uplink the space diversity principle is applied by using two receiving antennas at opposite locations at the aircraft, i.e., one at the bottom of the fuselage and one on the top of the fin. Thus, shadowing of both antennas at the same time is very unlikely. In the downlink more effort has to be spent. Two transmitting antennas are positioned about at the locations of the receiving antennas. So, again the space diversity principle is effective. But, in order to prevent interferences of the electromagnetic radiation of both antennas different carrier frequencies must be applied. Therefore, the frequency diversity principle is also effective. In practice, this design has proved to be very reliable even at very dynamic maneuvers of the aircraft.

The block diagrams of the onboard system and of the ground system are plotted in Figures 12.18 and 12.19, respectively.

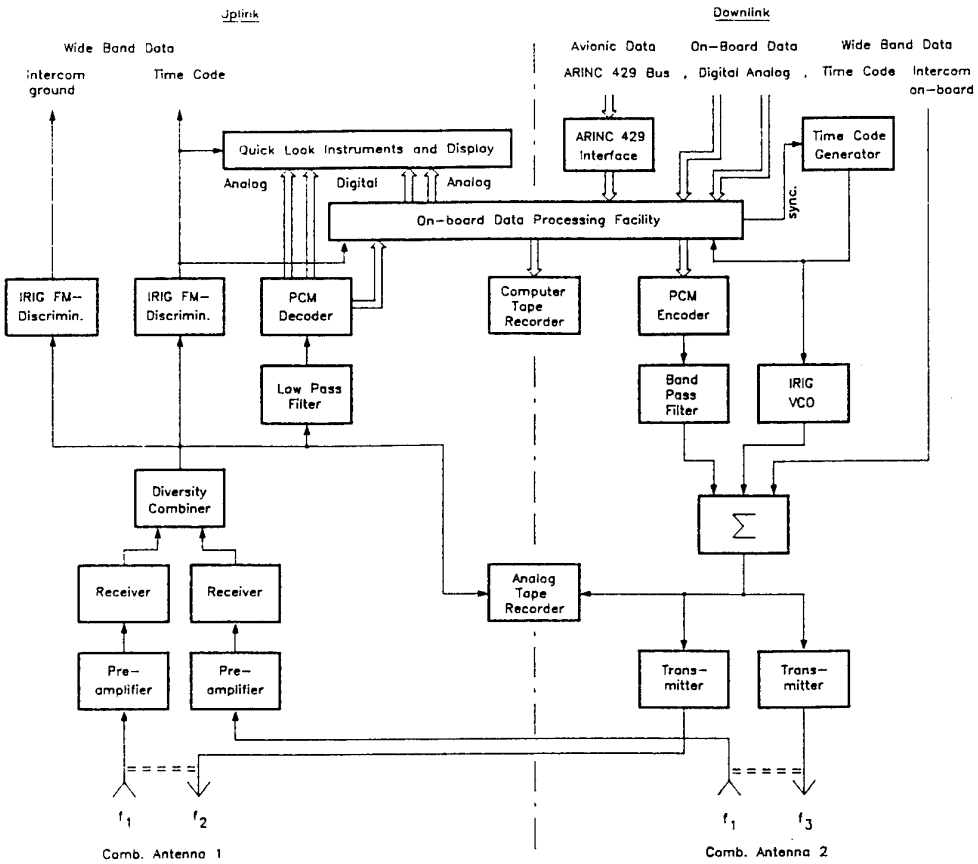

Figure 12.18 Telemetry on-board system.

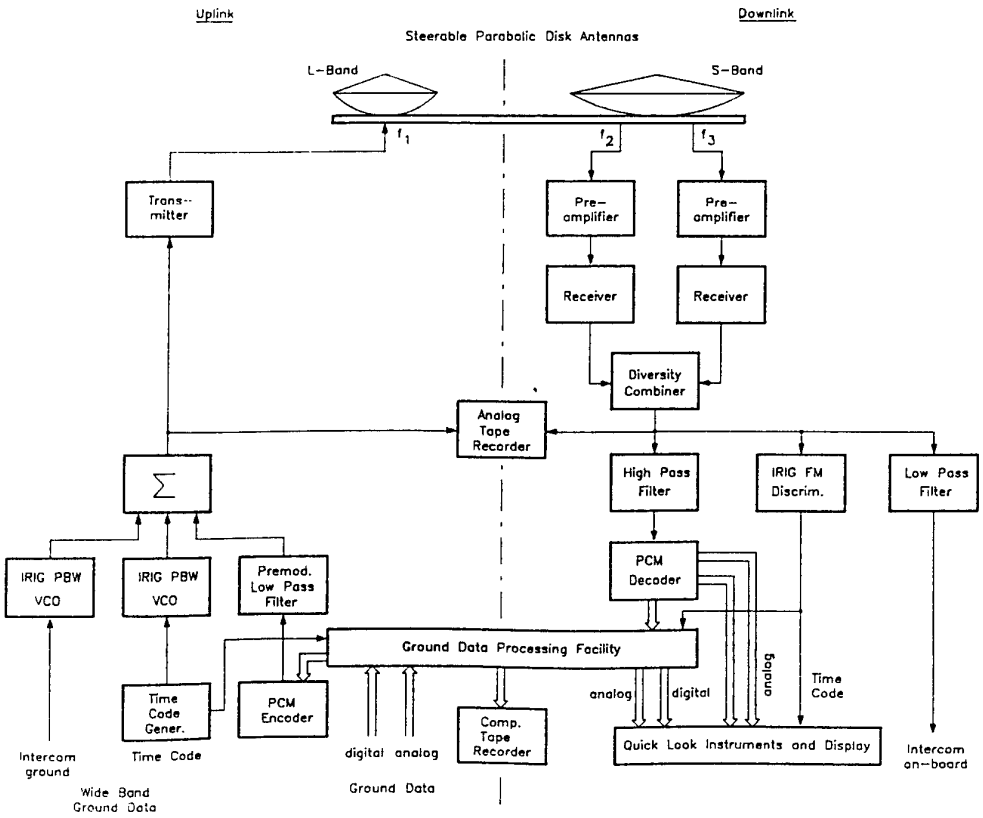

Figure 12.19 Telemetry ground system.

Downlink: The onboard data, to be transmitted to the ground station, are properly conditioned by the onboard data processing facility. The PCM encoder forms the serial PCM bitstream and a band pass filter limits the transmitted signal spectrum. As the biphase code is used, the lower part of the spectrum below the relevant part of the PCM-spectrum can be used for the intercom-signal and for an FM subcarrier in order to transmit the IRIG-B time code signal. These three signals are combined by a summing amplifier and fed into the modulation inputs of the two transmitters (in the case of the considered system the frequencies 2416,25 MHz and 2478,75 MHz are used).

On the ground, these frequencies are received via a parabolic dish antenna with autotrack capability. The output signal of the diversity receiving system is split off into three paths. The first carries via a low pass filter the onboard intercom speech signal. The second carries via an FM-discriminator and its incorporated band pass filter and carries the PCM data bitstream. The PCM decoder (the bit synchronizer is assumed to be incorporated) provides the ground data processing facility as well as the quick look facility with the required data signals.

Uplink: The ground data, analog as well as digital, are properly conditioned by the ground data processing facility. The PCM encoder generates the PCM serial bitstream using the biphase coding principle in the same way as it occurs in the downlink. However, because of the lower bit rate of 8,3 Kbit/s there is, contrary to the downlink, no sufficient spectrum bandwidth available below the relevant PCM biphase spectrum for positioning the two wide band channels. Thus, two FM subcarriers are used, which are positioned above the PCM spectrum. The time code signal modulates the proportional bandwidth channel A and the ground intercommunication speech signal the proportional bandwidth channel C. The PCM spectrum is limited by a low pass filter and combined with the two wide band channels by a summing amplifier. The combined signal modulates the ground transmitter (f_c = 1479,5 MHz in the case of the considered system). The transmitting antenna also is a parabolic disk which is mounted at the pedestal of the autotrack receiving antenna. Thus, the radiated beam is automatically directed to the aircraft.

Onboard the RF signal is received by two monopole antennas, as already explained, and processed by the diversity receiving system. The wide band channels then are filtered out and demodulated by the associated discriminators while the PCM bit stream are filtered out and demodulated by the associated discriminators while the PCM bit stream is selected by a low pass filter. The PCM decoder (the bit synchronizer is assumed to be incorporated) feeds the data into the onboard data processing facility as well as into the quick-look facility. The latter also displays selected processed data, which are useful for the flight test engineer.

The Figures 12.18 and 12.19 show that the data processing facilities, onboard as well as on the ground, are used for the uplink and for the downlink simultaneously. The same is the case with the tape recorders (computer recorders as well as analog recorders for the multiplexed output/input signals). The latter proved to be useful as a backup in the case of unexpected RF signal lost or post-flight investigations of the transmitted uplink/downlink data.

The master time code is generated on the ground. The onboard time code generator, however, is synchronized by the received time code signal from the ground. In the ground data processing facility the correspondence of the master time code and the received onboard time code is checked and adjusted if necessary. Thus, all data, uplink as well as downlink, can be associated with the corresponding time of occurrence even when interruptions in the RF reception occur.

The design of the system may be cleared up further by the following list of system parameters.

Downlink:

- PCM-part
  - 210 words/frame (208 data + 2 synchr.)
  - 12 bit/word → 2520 bit/frame
  - 54 frames/s → $2520 \cdot 54 = 136080$ bit/s
  - biphase coding → $f_U = 1{,}4 \cdot f_{bit} = 190{,}5$ kHz
    → $f_L = 0{,}3 \cdot f_{bit} = 40{,}8$ kHz
- wide band channels (allocated below the PCM spectrum)
  - timecode IRIG-B: risetime of coded pulses $\leq$ lms required
    → IRIG prop. bandwidth channel A: $f_{carrier} = 22$ kHz; mod. index $m = 1$
    upper frequency limit $f_U \cdot 22$ kHz $\cdot$ $[1 + 0.15(1 + 1)] = 28{,}6$ kHz
    lower frequency limit $f_L \cdot 22$ kHz $\cdot$ $[1 - 0.15(1 + 1)] = 15{,}4$ kHz
  - intercommunication signal, ranging from 100 Kz to 6 kHz

Thus, sufficient guard bands between the different spectrums are given.

Uplink:

- PCM-part
  - 16 words/frame (14 data + 2 synchr.)
  - 13 bit/word (12 data + 1 parity) → 208 bit/frame
  - 40 frame/s → 8,32 kbit/s
  - biphase coding → $f_U = 1{,}4 \cdot f_{bit} = 11{,}65$ kHz
    → $f_L = 0{,}3 \cdot f_{bit} = 2{,}50$ kHz
- Contrary to the situation with the downlink, the frequency band below f_L cannot be used for the wide band channels.

- Wide band channels (allocated above the PCM spectrum)
  - time code IRIG-B again, IRIG prop. bandwidth channel A is used

    → sufficient guard band between

    $f_{U\,PCM}$ = 11,65 kHz and f_L = 15,4 kHz (see above)
  - intercommunication signal ground

    IRIG prop. bandwidth channel C is used ($f_{carrier}$ = 40 kHz)

    (channels A and C are allowed to be used simultaneously)

12.5 REFERENCES

12.1 Nichols, Myron H. and Lawrence L. Rauch, *Radio Telemetry*, 2nd Edition, John Wiley and Sons, Inc., NY, NY, 1956.

12.2 *Aerospace Telemetry*, Vol. I, Harry L. Stiltz, editor, Prentice-Hall, Inc., Englewood Cliffs, NJ, 1961.

12.3 *Handbook of Telemetry and Remote Control*, Elliot L. Gruenberg, editor in chief, McGraw-Hill Book Company, NY, NY, 1967.

12.4 *Aerospace Telemetry*, Vol. 2, Harry L. Stiltz, editor, Prentice-Hall, Inc., Englewood Cliffs, NJ, 1966.

12.5 Becker, A., "The Role of Telemetry in the Modern In-Flight Measuring Techniques," presented at the 26th AGARD Flight Mechanics Panel Meeting, Paris, France, 1965.

12.6 "Telemetry Standards," IRIG Document 106-93, Secretariat Range Commanders Council, U.S. Army White Sands Missile Range, NM, 88002.

12.7 "Telemetry Applications Handbook," IRIG Document 119-88, Secretariat Range Commanders Council, U.S. Army White Sands Missile Range, NM, 88002, Feb. 1988.

12.8 Bothe, H. and D. Macdonald, *Determination of Antennae Patterns and Radar Reflection Characteristics of Aircraft*, AGARD-AG-300-Vol. 4, AGARD Flight Test Techniques Series, A. Pool, editor, Paris, France, 1986.

12.9 Bothe, H., *Telemetry RF Transmission with Diversity Operation*, European Telemetry Conference, Garmisch-Partenkirchen, Germany, June 1988.

12.10 *Special Section on Cryptology*, G. J. Simmons, editor, Proceedings of the IEEE, May 1988.

12.11 "Spread Spectrum Communications," AGARD-LS-58, Neuilly-sur-Seine, France, 1973.

12.12 Strock, O. J., *Telemetry Computer Systems, An Introduction*, Instrument Society of America (ISA), NY, 1983.

12.6 BIBLIOGRAPHY

1. Becker, A., B. Gartung, and H. Meyer, "Comparison of Systems," AGARD 32, presented at the 30th AGARD Flight Mechanics Panel Meeting, Montreal, Canada, 1967.

2. Masters, George W., *Communications System Test and Evaluation*, U.S. Naval Test Pilot School, U.S. Department of Commerce, National Technical Information Service (NTIS), Springfield, VA, 22161, Jan. 1981.

Chapter 13

MEASURING OF FLIGHTPATH TRAJECTORIES

by

Karlheinz Hurrass
DLR/FF-FL
PO Box 3267
38108 Braunschweig
Germany

13.1 INTRODUCTION

In modern flight testing, most measuring equipment can be carried on board the aircraft. In many cases, however, ground-based equipment should be used, often in combination with onboard measurements. The most important type of measurements which needs equipment on the ground is trajectory measurement. The tendency of using more and more hybrid systems can be observed during the last years. This is possible due to the improvements in the field of computer technology. A typical example of a hybrid system is an integrated system, which consists of an inertial navigation system on board the aircraft and ground systems, e.g., a tracking radar.

Typical applications for flightpath measuring are takeoff and landing performance measurements, testing of new radio navigation systems, analysis of the effect of improved navigation and guidance systems on overall flight performance, measuring of flight performance, study of the navigation behaviour of IFR-flights for determining separation standards, testing the performance of ballistic objects, analysis of the performance of parachutes and ejection seats, etc.

There are many test ranges in the world which use permanent equipment for measuring the trajectory of aircraft or other flying objects. Some measurements, however, need mobile equipment, e.g., cinetheodolites or tracking radars. This requires careful planning and often improvisation.

13.2 COORDINATE SYSTEMS

There are mainly two different coordinate systems which are used for the representation of flightpath trajectories: Cartesian coordinates and geographical coordinates. For many applications the use of a local Cartesian coordinate system has some advantages. They are sufficient if the measurements are carried out in a relatively small area with a size of some kilometers. Examples are takeoff and landing performance measurements, measurements on parachutes and ejection seats, and ballistic measurements at small ranges.

When using Cartesian coordinates in most cases the transformation of the measured units into $x/y/z$-coordinates is relatively simple. In the case of a tracking radar which is sited in the origin of the coordinate system, the $x/y/z$-coordinates are obtained using the following equations:

$$\begin{aligned} x &= \rho \cos\gamma \sin\sigma \\ y &= \rho \cos\gamma \cos\sigma \\ z &= \rho \sin\gamma \end{aligned} \tag{13.1}$$

ρ : radar range
σ : azimuth
γ : elevation

In some cases it is advantageous to align one axis of the Cartesian coordinate system with an axis which is of certain importance in connection with the measurements in question. A typical example for such an axis is the centre line of a runway.

If, however, a navigation system like VOR, a satellite navigation system or an inertial navigation system used together with ground based systems will be tested, a relation between the positions of the trajectory measuring

system and the navigation system has to be established. The easiest way to do this is the use of global geographical coordinates. This is meaningful especially for measurements in the aviation field, because in aviation all positions are given in geographical coordinates.

The transformation of local Cartesian coordinates into geographical coordinates can be performed by the following method. As a first step, a coordinate transformation of the $x/y/z$-system into the Earth-centered system z_1, z_2 , z_3 (Fig. 13.1) is necessary:

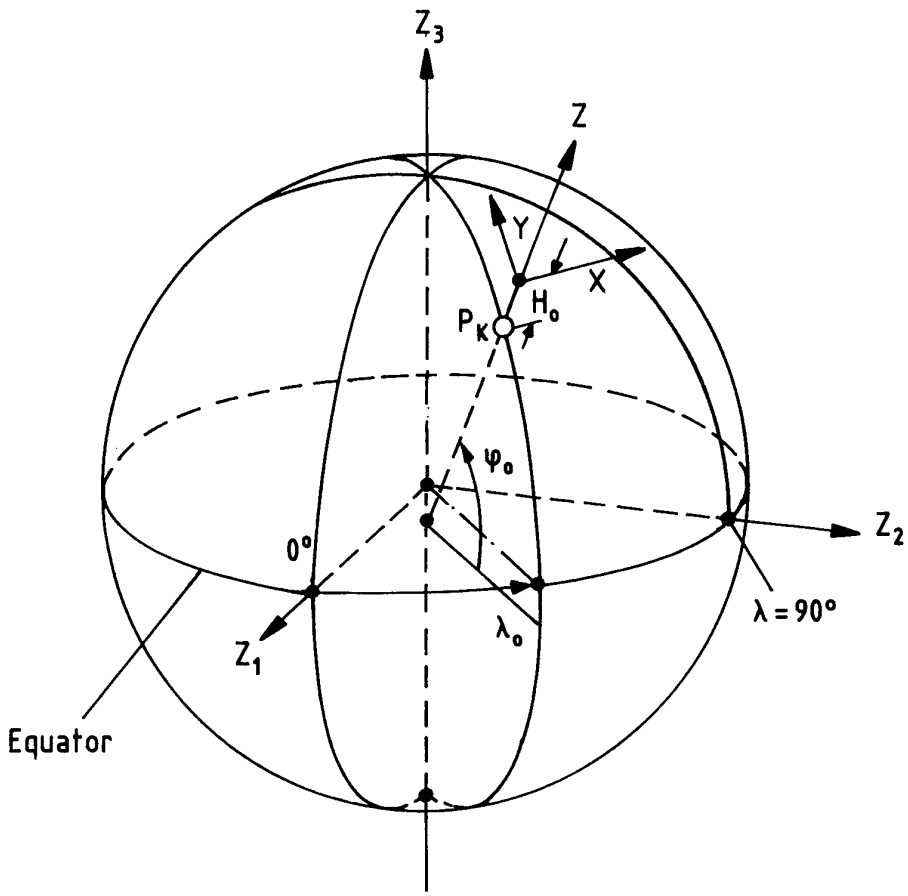

Figure 13.1. Geographical and x, y, z-coordinates.

$$\begin{vmatrix} z_1 \\ z_2 \\ z_3 \end{vmatrix} = \begin{vmatrix} z_{10} \\ z_{20} \\ z_{30} \end{vmatrix} + \begin{vmatrix} -\sin\lambda_o & -\sin\psi_o\cos\lambda_o & \cos\psi_o\cos\lambda_o \\ \cos\lambda_o & -\sin\psi_o\cos\lambda_o & \cos\psi_o\sin\lambda_o \\ 0 & \cos\psi_o & \sin\psi_o \end{vmatrix} \times \begin{vmatrix} x \\ y \\ z \end{vmatrix}$$

$$z_{10} = (N_o + H_o)\cos\psi_o\cos\lambda_o$$

$$z_{20} = (N_o + H_o)\cos\psi_o\sin\lambda_o$$

$$z_{30} = [N_o(1-e^2) + H_o]\sin\psi_o\ ,\ N_o = a/\sqrt{(1-e^2\sin^2\psi_o)} \tag{13.2}$$

λ_o, ψ_o, H_o : geographical coordinates of the center of the $x/y/z$-coordinate system
a : semimajor axis of the reference ellipsoid
b : semiminor axis of the reference ellipsoid
e : eccentricity of the reference ellipsoid ($e^2 = (a^2 - b^2)/a^2$)

The geographical coordinates are obtained using the following equations:

$$\begin{aligned}
\text{cotan}\lambda_p &= z_1/z_2 \\
\text{cotan}\psi_p &= \frac{\sqrt{z_1^2 + z_2^2}}{z_3}\left(1 - \frac{e^2}{1 + H_p/N}\right) \\
H_p &= \sqrt{z_1^2 + z_2^2}\,\cos\psi_p + z_3\,\sin\psi_p - a\sqrt{(1 - e^2\sin^2\psi_p)}
\end{aligned} \tag{13.3}$$

When computing ψ_p there is a difficulty because H_p and N can only be calculated if ψ_p is known. One should use an interative method beginning with $H_p = 0$ or using the altitude from an altimeter. After the first calculation of ψ_p a first approximation of H_p and N can be determined. Using these approximations an improved value for ψ_p can be obtained. This method converges very rapidly.

Besides geographical and local $x/y/z$-coordinates, other coordinate systems are also used, e.g., UTM-coordinates, Gauss-Kruger coordinates for ordinance survey of Germany. Details concerning these systems can be found in Ref. 13.1.

13.3 MATHEMATICAL METHODS

13.3.1 Determination of positions in $x/y/z$-coordinates

The measurements of many instruments are angles or distances. For most applications these measurements cannot directly be used but have to be converted into $x/y/z$-coordinates. Often an additional transformation into geographical coordinates (Section 13.2) or other coordinate systems is necessary.

Tracking radar, laser tracker

The equations for transforming tracking radar or laser tracker data into $x/y/z$-coordinates are given in Section 13.2.

Cinetheodolites

When using two cinetheodolites the following procedure can be used: First, the horizontal distance between cinetheodolite number 1 and the target should be calculated (Fig. 13.2):

$$e_1 = b_{12}\,\frac{\sin(\beta_{12} - \sigma_2)}{\sin(\sigma_1 - \sigma_2)} \tag{13.4}$$

In a second step the $x/y/z$-coordinates can be determined using only the data from cinetheodolite number 1 similar to tracking radar measurements:

$$\begin{aligned}
x &= x_1 + e_1\cos\sigma_1 \\
y &= y_1 + e_1\sin\sigma_1 \\
z &= z_1 + e_1\text{tg}\gamma_1
\end{aligned} \tag{13.5}$$

The disadvantage of this method is that the elevation angle of cinetheodolite number 2 is not taken into account. A method which uses all measurements is described in Section 13.3.2.

Ranging Systems

In the case of three range measurements the following equation is valid:

$$\rho_k = \sqrt{(x - x_k)^2 + (y - y_k)^2 + (z - z_k)^2} \tag{13.6}$$

k : 1, 2, 3
ρ_k : range measurement of station k
x_k, y_k, z_k : position of the ranging station k in the $x/y/z$-coordinate system
x, y, z : position of the target to be measured

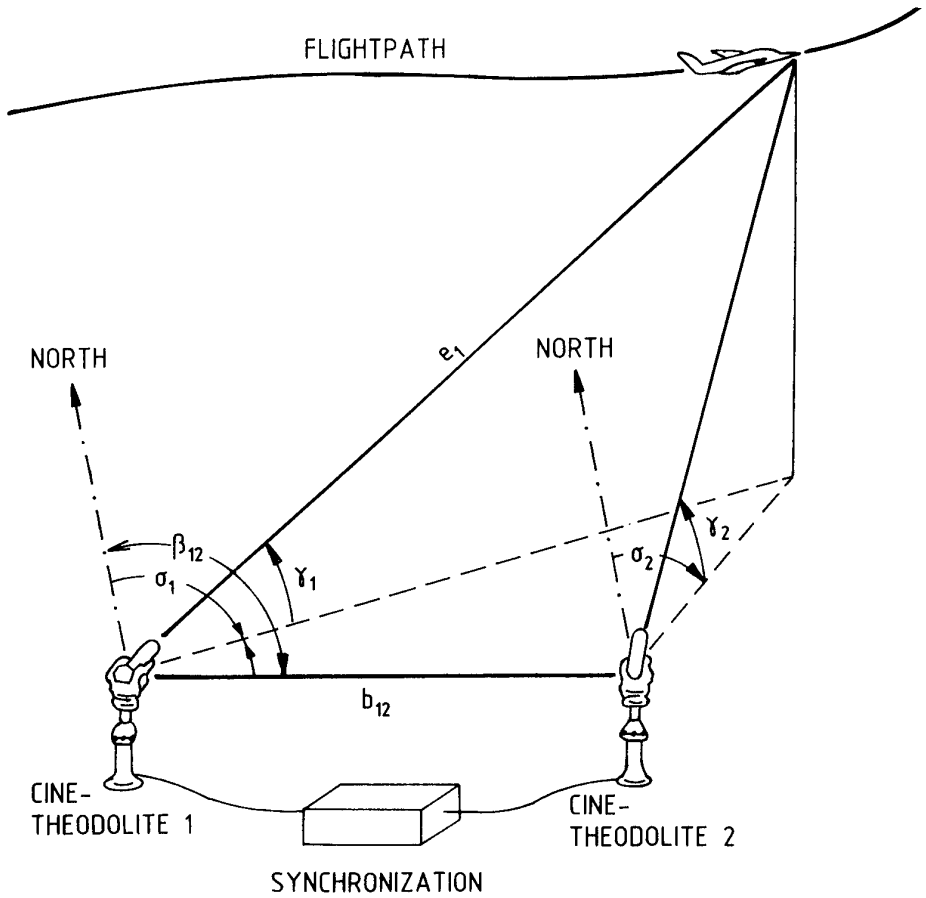

Figure 13.2. Trajectory measurement by means of two cinetheodolites.

Because the terms of equation (13.6) are nonlinear an iteration is necessary in order to determine the coordinates x, y, z. After starting with an approximate value x_o, y_o, z_o a linearization of equations (13.6) can be performed:

$$
\begin{aligned}
\Delta\rho_k &= \rho_k - \sqrt{(x_o - x_k)^2 + (y_o - y_k)^2 + (z_o - z_k)^2} \\
&= \Delta x h_{1k} + \Delta y h_{2k} + \Delta z h_{3k} \\
h_{1k} &= \frac{x_o - x_k}{R_k} \\
h_{2k} &= \frac{y_o - y_k}{R_k} \\
h_{3k} &= \frac{z_o - z_k}{R_k} \\
R_k &= \sqrt{(x_o - x_k)^2 + (y_o - y_k) + (z_o - z_k)^2} \\
k &= 1, 2, 3
\end{aligned}
\tag{13.7}
$$

The correction values Δx, Δy, and Δz are obtained by using:

$$
\begin{vmatrix} \Delta x \\ \Delta y \\ \Delta z \end{vmatrix} = \begin{vmatrix} h_{11} & h_{21} & h_{31} \\ h_{12} & h_{22} & h_{32} \\ h_{13} & h_{23} & h_{33} \end{vmatrix}^{-1} \times \begin{vmatrix} \Delta\rho_1 \\ \Delta\rho_2 \\ \Delta\rho_3 \end{vmatrix}
\tag{13.8}
$$

Δx, Δy, and Δz now can be used for calculating a better position estimate:

$$\begin{aligned} x &= x_o + \Delta x \\ y &= y_o + \Delta y \\ z &= z_o + \Delta z \end{aligned} \tag{13.9}$$

This position can be used again for a new iteration step. The iterations should be stopped when the calculated corrections Δx, Δy, and Δz are below a predetermined threshold.

13.3.2 Method of least squares adjustment

For the determination of one position at a certain time only three measurements are necessary, e.g., three range measurements. In many cases there are more measurements available. The following question arises: How should such redundant measurements be computed? The most suitable method is the so-called method of least squares adjustment.

When using this method for computing flightpath positions in a first step approximate values x_o, y_o, z_o have to be calculated. This can be done using one of the methods described in Chapter 13.3.1. The most probable position is calculated by using equation (13.9):

$$\begin{aligned} x &= x_o + \Delta x \\ y &= y_o + \Delta y \\ z &= z_o + \Delta z \end{aligned}$$

The essential part of the method is the determination of Δx, Δy, and Δz. The next step for doing this is the formulation of observation equations. In the case of using two cinetheodolites and one tracking radar or laser tracker these equations are as follows :

$$\left.\begin{aligned} \mathbf{v}_1 &= \sigma_1 - \operatorname{arctg}\frac{x_o - x_1}{y_o - y_1} \\ \mathbf{v}_2 &= \gamma_1 - \operatorname{arctg}\frac{z_o - z_1}{d_1} \end{aligned}\right\} \text{Cinetheodolite 1}$$

$$\left.\begin{aligned} \mathbf{v}_3 &= \sigma_2 - \operatorname{arctg}\frac{x_o - x_2}{y_o - y_2} \\ \mathbf{v}_4 &= \gamma_2 - \operatorname{arctg}\frac{z_o - z_2}{d_2} \end{aligned}\right\} \text{Cinetheodolite 2}$$

$$\left.\begin{aligned} \mathbf{v}_5 &= \sigma_3 - \operatorname{arctg}\frac{x_o - x_3}{y_o - x_3} \\ \mathbf{v}_6 &= \gamma_3 - \operatorname{arctg}\frac{z_o - z_3}{d_3} \\ \mathbf{v}_7 &= \rho_3 - \sqrt{(x_o - x_3)^2 + (y_o - x_3)^2 + (z_o - z_3)^2} \end{aligned}\right\} \text{Radar}$$

$$d_k = \sqrt{(x_o - x_k)^2 + (y_o - y_k)^2} \quad k = 1, 2, 3 \tag{13.10}$$

x_k, y_k, z_k : positions of cinetheodolites and of the radar, respectively
σ_k : measured azimuth angles
γ_k : measured elevation angles
ρ_3 : measured range

The values $\mathbf{v}_1 \ldots \mathbf{v}_7$ on the left side of the equations in (13.10) are measurement contradictions. They are zero if the first approximation for the position is correct and if there are no measurement errors. In reality these

contradictions can never be zero because of measurement errors. Method of least squares adjustment calculates the corrections Δx, Δy, and Δz under the condition that the resulting weighted square sum of the residuals $\mathbf{v}^T R^{-1} \mathbf{v}$ becomes a minimum.

$\mathbf{v}$: vector which contains the contradictions $\mathbf{v}_n$ after applying the corrections Δx, Δy, and Δz
R : covariance matrix of the measurement errors

The diagonal elements of the covariance matrix R contain the squared standard deviations of the measurement errors. Therefore, the *a priori* accuracies of the measurements are taken into account.

Because equations (13.10) are nonlinear a linearization is necessary:

$$\left.\begin{aligned} \mathbf{v}_1 &= H_{1,1}\Delta x + H_{2,1}\Delta y + H_{3,1}\Delta z \\ \mathbf{v}_2 &= H_{1,2}\Delta x + H_{2,2}\Delta y + H_{3,2}\Delta z \end{aligned}\right\} \text{Cinetheodolite 1}$$

$$\left.\begin{aligned} \mathbf{v}_3 &= H_{1,3}\Delta x + H_{2,3}\Delta y + H_{3,3}\Delta z \\ \mathbf{v}_4 &= H_{1,4}\Delta x + H_{2,4}\Delta y + H_{3,4}\Delta z \end{aligned}\right\} \text{Cinetheodolite 2}$$

$$\left.\begin{aligned} \mathbf{v}_5 &= H_{1,5}\Delta x + H_{2,5}\Delta y + H_{3,5}\Delta z \\ \mathbf{v}_6 &= H_{1,6}\Delta x + H_{2,6}\Delta y + H_{3,6}\Delta z \\ \mathbf{v}_7 &= H_{1,7}\Delta x + H_{2,7}\Delta y + H_{3,7}\Delta z \end{aligned}\right\} \text{Radar} \tag{13.11}$$

or

$$\mathbf{v} = H \begin{vmatrix} \Delta x \\ \Delta y \\ \Delta z \end{vmatrix}$$

The elements of matrix H are as follows:

Azimuth measurements:

$$H_{1,n} = \frac{y_o - y_k}{D_k^2} \quad H_{2,n} = -\frac{x_o - x_k}{D_k^2} \quad H_{3,n} = 0$$

$$n = 1,3,5 \quad k = 1,2,3$$

Elevation measurements:

$$H_{1,n} = -\frac{(z_o - z_k)(x_o - x_k)}{D_k\,\rho_k^2} \quad H_{2,n} = -\frac{(z_o - z_k)(y_o - y_k)}{D_k\,\rho_k^2} \quad H_{3,n} = \frac{D_k}{\rho_k^2}$$

$$n = 2,4,6 \quad k = 1,2,3$$

Range measurement:

$$H_{1,7} = \frac{x_o - x_3}{\rho_3} \quad H_{2,7} = \frac{y_o - y_3}{\rho_3} \quad H_{3,7} = \frac{z_o - z_3}{\rho_3}$$

$$D_k = \sqrt{(x_o - x_k)^2 + (y_o - y_k)^2}$$

$$\rho_k = \sqrt{(x_o - x_k)^2 + (y_o - y_k)^2 + (z_o - z_k)^2}$$

The correction values Δx, Δy, Δz are obtained by solving the following matrix equations:

$$\begin{vmatrix} \Delta x \\ \Delta y \\ \Delta z \end{vmatrix} = PH^T R^{-1}\,\mathbf{v}$$

$$P = (H^T R^{-1} H)^{-1} \tag{13.12}$$

P is the error covariance matrix for the computed position. The vector $\mathbf{v}$ is calculated using equations in (13.10).

In some cases it may be necessary to repeat the calculations and start with the approximation

$$x_o' = x_o + \Delta x$$
$$y_o' = y_o + \Delta y$$
$$z_o' = z_o + \Delta z$$

Advantages of the method of least squares adjustment:

- All measurements from different measurement systems are used in an optimal manner.
- Different measurement accuracies of the sensors are taken into account.
- The number of measurement equations in (13.10) can be expanded for any number of instruments. Therefore, this method can be used for the integration of a great variety of different measurement systems.
- Together with the most probable positions the error covariance matrices are automatically estimated. This is useful when integrating positions from classical instruments for flightpath determination with onboard sensors like inertial navigation systems with the aid of Kalman filters.

Disadvantages:

- There is the need for carrying out a great amount of calculations. But this is no problem with modern computers. Typical computing times for calculating one position are in the order of milliseconds.

13.3.3 Kalman filtering

Before each test all sensors for flightpath determination have to be calibrated in order to minimize bias errors. Therefore, the measured positions contain mainly random errors with small correlation times. For example in the case of tracking radar measurements these errors are due to the fluctuation of the radar cross section area. Smoothing of such type of errors may be performed with the aid of least square polynomial filtering. The disadvantage of this method is that, together with the noise, also high frequent movements of the target are smoothed out. A combination of redundant navigation information from inertial navigation systems (INS) on board the test aircraft with sensors for flightpath trajectories allows the separation of the above mentioned noise and the maneuvers of the aircraft. Inertial navigation systems have low frequency position errors so that it seems quite logical to combine them with instruments for flightpath measurements.

The optimal integration of an inertial navigation system can be carried out by means of the Rauch-Tung-Striebel algorithm, which consists of a Kalman filter and a backward smoother. The forward filter can take into account previous measurements only. The smoothed estimate utilizes all measurements. It is obvious that the smoothed positions are thus always at least as accurate as the forward filtered positions. In most cases, the smoothed positions are considerably more accurate than the filtered ones. It is evident that backward smoothing can only be done off-line.

The filter estimates the so-called state vector $\mathbf{x}$ together with the error covariance matrix P. The state vector contains in this application the error components of the inertial navigation system. The smoothed trajectories and also accurate velocities are obtained by adding the state vector to the measurements delivered by the inertial navigation system.

The equations of the Rauch-Tung-Striebel algorithm are:

Forward filter

$$
\begin{aligned}
\mathbf{x}(k)^- &= \phi(k,k-1) \times (k-1)^+ \\
\mathbf{x}(k)^+ &= \mathbf{x}(k)^- + K(k)(\mathbf{y}(k) - H(k) \times (k)^-) \\
P(k)^- &= \phi(k,k-1)P(k-1)^+ \phi(k,k-1)^T + Q(k-1) \\
K(k) &= P(k)^- H(k)^T (H(k)P(k)^- H(k)^T + R(k))^{-1} \\
P(k)^+ &= (I - K(k)H(k))P(k)^-(I - K(k)H(k))^T + K(k)R(k)K(k)^T
\end{aligned} \tag{13.13}
$$

where

$\mathbf{x}(k)$	: state vector
$\mathbf{x}(k)^-$, $\mathbf{x}(k)^+$	: filtered estimates of $\mathbf{x}(k)$ immediately before and after measurement k
$P(k)^-$, $P(k)^+$	: covariance matrices of $(\mathbf{x}(k)^- - \mathbf{x}(k))$ and $(\mathbf{x}(k)^+ - \mathbf{x}(k))$
$K(k)$	: optimal gain of forward filter
$\mathbf{y}(k)$	: measurement vector
$H(k)$	: measurement matrix
$R(k)$	: covariance matrix of the measurement k (e.g., calculated with equation (13.2))
$Q(k-1)$	: covariance matrix representing the noise inputs between measurement $k-1$ and k
$\phi(k,k-1)$	: transition matrix

The measurements $\mathbf{y}(k)$ are the differences between the measured positions from the ground sensors and the positions determined by the INS. The measurement matrix $H(k)$ relates these measurements to the corresponding elements of the state vector.

Backward filter

$$
\begin{aligned}
\mathbf{x}(k,N) &= \mathbf{x}(k)^+ + C(k)(\mathbf{x}(k+1,N) - \phi(k+1,k)\mathbf{x}(k)^+) \\
C(k) &= P(k)^+ \phi(k+1,k)^T (P(k+1)^-)^{-1} \\
P(k,N) &= (I - C(k)\phi(k+1,k))P(k)^+(I - C(k)\phi(k+1,k))^T \\
&\quad + C(k)(P(k+1,N) + Q(k))C(k)^T
\end{aligned} \tag{13.14}
$$

with

$$
\begin{aligned}
\mathbf{x}(N,N) &= \mathbf{x}(N)^+ \\
P(N,N) &= P(N)^+
\end{aligned}
$$

where

N	: total number of iterations
$\mathbf{x}(k,N)$	: smoothed estimate
$P(k,N)$	: error-covariance matrix of smoothed estimate
$C(k)$	: optimal gain of backward filter

The smoothing process consists of two steps:

1. **Forward filtering**
   The Kalman filter equations are solved for the flight time in consideration. The results are the estimates $\mathbf{x}(k)^+$ and the corresponding covariance matrices $P(k)^+$.

2. **Backward smoothing**
   The backward smoother equations are solved backward in time, utilizing and improving the estimates $\mathbf{x}(k)^+$ of the forward filter and the corresponding covariance matrix $P(k)^+$.

Advantages:

- An integration between sensors for flightpath measuring and onboard navigation systems is possible.
- High frequency movements of the aircraft are not smoothed out.
- The position accuracies obtained due to the integration are higher than the accuracies obtained from the sensors for flightpath determinations alone.
- The velocities are obtained automatically with a high degree of accuracy.
- Both the positions and the velocities are nearly continuously available. This is also true when the time interval between the measurements is relatively great (e.g., 1 min).

Disadvantages:

- It is necessary to carry out a great amount of calculations and to store much data for the backward filter. With modern computers there is no problem in doing this. Typical computing times for one iteration are in the order of 50 msec.

13.3.4 Influence of atmospheric refraction

When transmitting or receiving electromagnetic waves it is necessary to take into account the influence of the troposphere on the propagation. Due to atmospheric refraction, radio and optical waves are bent and systematic errors are introduced in the measurements of elevation angles. An error is also caused in the range measurements due to the influence of tropospheric refraction.

The reason for these effects is the index of refraction, n, which changes with altitude. For microwave frequencies this index can be calculated using

$$(n-1)10^6 = N \approx \frac{77.6p}{T} + \frac{3.73\ 10^5 e}{T^2} \tag{13.15}$$

N : modified index of refraction
p : air pressure (hektoPascal)
e : partial pressure of water vapor (hektoPascal)
T : absolute temperature (degree Kelvin)

For light the index N is given by the following equation:

$$N \approx 83.32\,\frac{p}{T} - 11.2\,\frac{e}{T} \tag{13.16}$$

For the purpose in question here, a simple exponential profile for the refraction index is sufficient:

$$N(h) = N_o \exp(-h/H_t) \tag{13.17}$$

h : height above ground
N_o : surface value of N
H_t : tropospheric scale height

The parameters N_o and H_t may be calculated using observed meteorological data (e.g., from balloon ascents).

In the case of measuring elevation angles a correction angle can be calculated using an approximation. Figure 13.3 shows the geometry of the refractive effect. γ_o is the measured elevation angle. The correct value is approximately:

$$\gamma \approx \gamma_o - \frac{\delta}{\rho_o} \text{ (radian)} \tag{13.18}$$

ρ_o : range to vehicle

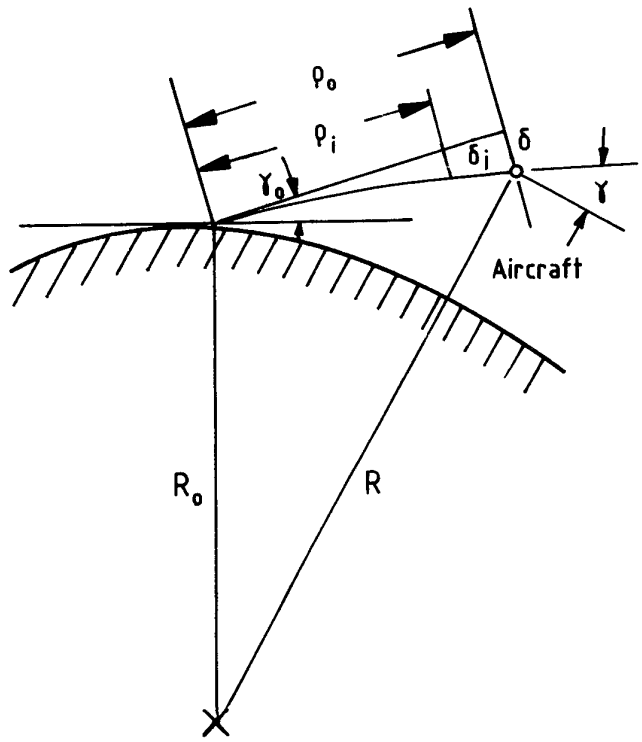

Figure 13.3. Geometry of refractive effect.

The correction value δ can be calculated using the radii of curvature. They depend on γ and the change of the index of refraction with altitude:

$$r = \frac{n}{\frac{dn}{dh}\cos\gamma} \tag{13.19}$$

The angle γ of the ray direction can be reduced to the initial angle γ_o by Snell's law of refraction.

$$nR\cos\gamma = n_o R_o \cos\gamma_o \tag{13.20}$$

A practical solution to calculate δ is a recursive method which needs the curvature for range intervals $\Delta\rho$. Starting at the ground the following recursive equation is a practical solution:

$$\begin{aligned}
\delta_i &\approx \delta_{i-1} + \Delta\rho_i\,(1/2\,\Delta s_i + s_i) \\
s_i &= s_{i-1} + \Delta s_{i-1} \\
\Delta s_i &= \Delta\rho_i / r_i \\
i &= 1,2,3\ldots \\
s_o &= 0\delta_o = 0\Delta s_o = 0
\end{aligned} \tag{13.21}$$

When using range intervals of about 0.5 km the accuracy of the calculated corrections is much higher than the accuracy of all instruments for flightpath measurements which are used today. Typical correction angles are between 0.001° and 0.1°.

The range error ΔR denotes the difference of the range which is determined along the propagation path ρ and the correct slant range ρ_o. The measured range along the so-called phase path is defined by

$$\rho = \int_o^\rho n \, d\rho \tag{13.22}$$

Because of the small difference between the phase path and the direct path the range error can be approximated by

$$\Delta\rho = \int_o^\rho (n-1) \, d\rho \tag{13.23}$$

In the literature (Ref. 13.2) exact formulas are also given for calculating the range and elevation errors due to atmosphere refraction. But the disadvantage of these formulas is that they cannot often be used because of the limited accuracy of computers.

13.4 INSTRUMENTS AND METHODS

The most important systems for measuring flightpath trajectories are cinetheodolites, tracking radars, laser trackers, and laser or microwave ranging systems. Due to the improvement in computer technology, integrations between different systems are often carried out. In particular, the combination between inertial navigation systems onboard the test aircraft with the above mentioned instruments becomes more and more important.

The types of instruments utilized for flightpath measurement depend on the task. In the next subsections, a short description of the different measurement types together with their advantages and disadvantages are given.

13.4.1 Cinetheodolites

A cinetheodolite is a camera which periodically records on film the azimuth and elevation of the line of sight to a target together with the target itself.

For doing this the operators have to adjust the cinetheodolite as accurately as possible to the target. For this task each operator can use a handwheel and a telescope. Each cinetheodolite reading shows the azimuth and elevation of the optical axis and the displacement between the optical axis and the target (Fig. 13.4). This

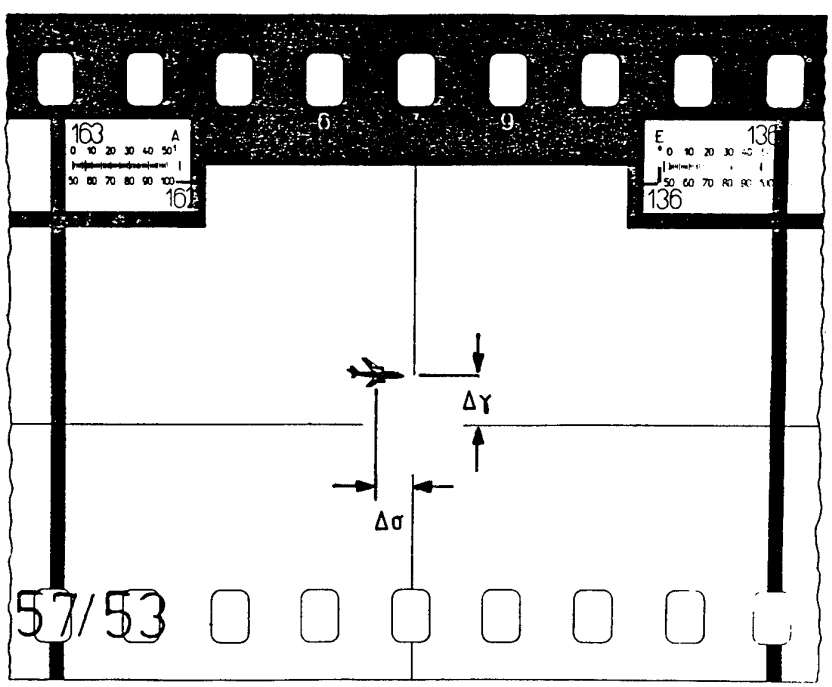

Figure 13.4. Cinetheodolite frame.

displacement occurs due to the fact that the operators generally are not able to align the optical axis exactly to the target. Therefore, a correction of the recorded azimuth and elevation angles is necessary using this displacement.

Because a cinetheodolite only measures two angles at least two separate instruments are necessary for the determination of three coordinates of the target (Fig. 13.2). However, three separate theodolites are desirable for increasing the accuracy and reliability. Before cinetheodolites can be used for the determination of flightpaths, their sites need to be surveyed. The next step is the determination of the so-called index errors. These are bias errors which give the difference between the correct angles to a target and the angles which were processed from the cinetheodolite readings. The index errors can be determined by taking pictures from a surveyed point in the normal and the plunged position. In the plunged position the azimuth is changed by 180° and the elevation by $180° - 2\gamma$.

Advantages:

- The systematic and random errors can be kept below 0.01° if the acceleration of the cinetheodolite is within reasonable limits (Ref. 13.3). This equipment is, therefore, suitable for absolute measurements. The reference points on the aircraft must be well defined.
- The initial cost and amortization of this system are lower than for some other equipment, e.g., a tracking radar, if the tracking device of the cinetheodolite is simple and only a film is used for data storage.
- Targets on the ground or in the vicinity of the horizon can be measured, as well as those at higher elevations.
- The cinetheodolites take a picture of the target at each measurement, and thus valuable additional information is obtained which often renders the employment of another camera unnecessary. Examples of additional information are external events such as the separation of a parachute, or a rough estimate of the attitude of the target.
- Two cinetheodolites are necessary for determination of three dimensional coordinates. This disadvantage can be removed by adding a laser ranger.

Disadvantages:

- Two operators are necessary during the measurement at each cinetheodolite. For modern instruments actuators have been developed which allows one operator to control both azimuth and elevation.
- Tracking targets near the zenith can lead to intolerably high angular velocities.
- The target must be acquired and tracked visually by the operators. Track acquisition can be accomplished by slaving cinetheodolites to other tracking devices such as for example tracking radars. Some modern instruments are combined with video or infrared trackers which can take the operator out of the loop.
- The visibility is an upper limit and the acquisition range, particularly for high speed aircraft at large distances, is somewhat smaller than the visibility. Visibilities below 10 km are common in Central Europe. Even if the visibility is much higher, the acquisition range is often below 10 km for an aircraft whose flightpath is not well known. The recognition of an aircraft in twilight or at night can be significantly increased when continuously radiating lamps or flashing lights are mounted onboard the aircraft.
- The processing of cinetheodolite measurements using classical methods is expensive and tedious. The reading of the azimuth, elevation and displacement stored on one frame of cinetheodolite film will take about 1 min. Appreciably higher rates of reading are possible when cinetheodolites with digital presentation of elevation and azimuth are used together with special semi-automatic reading equipment. For the reading it is necessary to choose a reference point on the aircraft which is recognizable on every frame. This may, for example, be the rudder of the aircraft or a wheel of the landing gear. Most well identifiable reference points have the disadvantage of not coinciding with the center of gravity or another important point of the target. The transformation from the employed to the desired reference point, however, depends on the attitude of the target. In some cases, transformation difficulties can be decreased by putting strikingly coloured marks in the vicinity of the desired reference points. This is, however, only effective at relatively short ranges.

Online storage and processing of azimuth and elevation of the optical axis is an integral part of modern cinetheodolites, but this problem has not yet been solved for the displacement of a target with a complex pattern.

- In some cinetheodolite systems the azimuth and elevation angles of the optical axis are stored in electrically retrievable form, so that they can be processed automatically. Even with such systems, the displacement of the aircraft from the optical axis must be measured manually from the film picture.

Range of applications:

- Cinetheodolite systems are ideal for measuring the trajectory of targets near the horizon or on the ground. Targets at short or medium slant ranges can be measured with high absolute accuracy if the slant visibility is satisfactory.

13.4.2 Tracking radar

A tracking radar can automatically track a target and measure azimuth, elevation, and slant range to the instantaneous center of the radar cross section or transponder antenna (Ref. 13.4).

Tracking radars for purposes of flightpath measurements are able to align their antenna beam continuously to the target by a servomechanism actuated by an error signal. The antenna must first be directed to the target so that a range gate can be brought in near coincidence with the echo of the target before the tracking radar can track. This acquisition can be done by slaving the tracking radar to an IFF track.

There are different methods of generating the error signals for the servomechanism: conical scan, sequential lobing, and monopulse. In the case of conical scan and sequential lobing a train of pulses is necessary for processing an error signal. If there is a fluctuation of the pulses in the train an error occurs due to this fluctuation. Monopulse radars avoid this disadvantage because they can process an error signal from each individual echo signal.

Tracking in range is performed by measuring the travel time between transmitting and receiving the pulses. For generating the error signals, only those echo signals are used which are received within the range gate. In the tracking mode this gate is automatically centered around the echo pulse from the target in question. The data of three typical tracking radars are listed in table 13.1.

Table 13.1. Typical tracking radars.

Radar type Characteristic	L4/3 HSA	AN/TPQ-39(V) RCA	AN/MPS-36 RCA
Type of tracking	Conical scan	Sequential lobing	Monopulse
Antenna size (m)	1.50	1.83	3.66
Frequency	X-band	C-band	C-band
Peak power (kW)	50	250	1000
Pulse width (μsec)	0.5	1.5	0.25–1.0
Pulse repetition frequency (kHz)	1.6	0.16–0.64	0.16–0.64
Accuracy			
Range (m, 1σ)	10	2	3
Angle (°, 1σ)	0.1	0.03	0.02
Maximum range (km)	50	234	59304

The accuracies given in table 13.1 can only be achieved when the radars are carefully calibrated before each measurement. This can be done with the help of a boresight tower or by tracking a target together with

cinetheodolites or a laser tracker. Concerning the accuracy in elevation it is important to take the refraction of radar waves in the atmosphere into account.

Modern tracking radars with phased array antennas are able to track many targets simultaneously, and include search modes for acquisition.

Advantages:

- The target can be acquired and tracked even if it is masked by fog or clouds.
- Large slant ranges are possible.
- Only one radar is necessary for determining three dimensional coordinates.
- Two operators are often sufficient during the measurement.
- Online data storage and processing is a common procedure.
- The error of the slant range can be kept low and nearly independent of the range (about 2 to 10 m).

Disadvantages:

- Targets on the ground or in the vicinity of the horizon cannot be tracked.
- The reference point on the target is random for skin tracking. By the addition of a transponder to the aircraft, not only the reference point can be better fixed, but also a considerably larger range can be obtained. However, difficulties in installing the antennas have to be overcome.
- The angular errors are small only for high precision radars, but these are very expensive. The calibration of the elevation angle of a radar is difficult.

Range of application:

- Tracking radars are ideal for determining the trajectory of targets at medium or large ranges under nearly all weather conditions. The effect of angular errors has to be considered.

13.4.3 Laser tracker

The principle of laser trackers is very similar to that of a tracking radar. The main difference lies in the frequencies which are used for the emitted pulses. The frequencies of most present-day laser trackers are in the infrared region.

Similar to tracking radars, laser trackers automatically measure elevation, azimuth, and slant range after they are brought into the track mode. In order to align the optical axis of the laser tracker to the target, error signals for controlling the laser pedestal are generated from the received pulses. The range is determined by measuring the travel time of the laser pulses.

Because of the small amount of laser energy which is returned to the laser optics, a "corner reflector" is normally mounted on the test aircraft. Reflective tape is also used for this purpose, but then more laser power is necessary to obtain the same reflected power.

The reflector for the laser pulses can be an assembly of so-called corner or retro reflectors in order to reflect the laser pulses from all directions back to the laser tracker. Some reflectors contain 24 single retro reflectors.

Most transmitters of laser trackers are Nd:YAG lasers or use GaAs laser diodes. The range of transmitted peak power ranges from 25 W to about 10 MW. A typical beam width is in the order of 0.1°.

Typical diameters of the receiver optics are about 0.2 m. Most laser trackers use photodiodes as a sensor for the received laser pulses. Cathode-ray tubes and photo multipliers are also used for this purpose.

For all laser trackers, precautions are necessary to provide a fail-safe, fully responsive eye safety system. Therefore, all laser trackers with a radiated pulse power greater than about 100 W contain a transmit power programming system to ensure eye safety.

Before a laser tracker can be switched into track mode the tracker should be directed to the retro reflectors of the test aircraft. This is often carried out manually by using a television screen which displays the image from a television camera that moves with the laser beam. In some cases it is also possible to acquire the target automatically using information from a tracking radar (e.g., the French STRADA system and the DLR laser tracker).

Advantages:

- The position of a test aircraft can be measured very accurately. Considering the angles, an accuracy can be reached which is higher than 0.01°. Range accuracies of better than 1 m are possible.
- Aircraft position coordinates are immediately available. Therefore, online processing is normal procedure.
- Only two operators are necessary.
- In contrast to tracking radars tracking down to the ground is possible with no degradation of accuracy.
- One instrument is sufficient for determining the position in three coordinates.
- Accurate calibration is possible by using fixed retro reflectors with known positions.

Disadvantages:

- Maximum ranges are about 30 km.
- Tracking is only possible during weather conditions with good visibility.
- The laser pulses can be dangerous to human eyes unless special precautions are undertaken.
- A laser reflector is required on the test aircraft.

Range of applications:

- Takeoff and landing measurement.
- Test of instrument landing systems.
- Dynamic tests of precision navigation systems, e.g., satellite systems (GPS).

13.4.4 Radio electric ranging systems

There are different systems in use which are only based on range measurements. These measurements should be carried out from at least three different ground stations. In most cases to improve the accuracy and for redundancy reasons more than three measurements for calculating one position are used.

All electric ranging systems consist of measuring units which are located on the ground and one unit located in the target which is being tracked. Most systems use a transponder in the target and interrogators on the ground. The opposite procedure is also possible; one interrogator is on board the target and the transponders are on the ground.

In order to determine the range between a ground unit and the target, the travel time between transmitted radio signals from the interrogator to the transponder and back to the interrogator is measured. Some systems use phase measurements for doing this; others use time measurements between transmitted and received pulses. The radio frequencies are in the VHF or C-band. A typical radiated power is 10 W.

Before measurements can be performed the positions of all ground units should be determined. The calculation of the positions concerning all systems is carried out using the methods described in Section 13.3. Under good geometrical conditions typical position accuracies are in the order of 3 to 10 m (2σ).

The geometry of ground unit locations relative the vehicle being tracked is an important factor in assessing the accuracy of positions determined by radio ranging systems. This usually is described by the so-called geometric dilution of precision (GDOP).

A typical example for a radio electric ranging system is the microwave airplane position system (MAPS) developed by the Boeing Company for aircraft certification tests. This system is based on Cubic's CR-100 precision ranging system. The battery powered transponders sited on the ground are equipped with omni-directional antennas. The airborne portion consists of an interrogator, an omni-directional antenna, a distance measuring unit, and a computer for computing the positions. The radio signals are frequency modulated. The range is determined by measuring the phase shift of four harmonically related modulation tones. The Doppler shift of the carrier frequency allows the computation of the range rate. The different transponders are serially interrogated. Therefore, each transponder requires an identification code. The transponders are interrogated at time intervals of 25 msec. Because eight transponders are typically used, five positions can be calculated each second.

Other systems use pulse modulated systems, e.g., the Motorola Mini Ranger. This system uses a transponder on board the test aircraft and interrogators on the ground. Therefore, the measured ranges and positions are obtained on the ground.

Most systems calculate the positions using a Kalman filter. The measurements are the ranges and in some cases the range rates which are determined from the Doppler shift. In the case of the MAPS the state vector of the Kalman filter contains six elements for each dimension of position and velocity. The system model assumes an unaccelerated motion which is disturbed by noise.

Advantages:

- Online evaluation is possible.
- The complete system can accompany the aircraft to any test range because of its relative small size and weight.
- The systems can be used under any weather condition.
- Highly accurate position data are obtained within about a 10-km radius. The horizontal position accuracy in each direction is in the order of 0.3 to 0.5 m. In the case of higher elevation angles, the same accuracy is possible.

Disadvantages:

- The determination of altitude in most conditions is relatively poor. Only in the case of high elevation angles are precise altitude measurements possible.
- On board the test aircraft or each target a transponder or interrogator is necessary.
- Before the measurements, the positions of at least three ground stations have to be determined.

Range of applications:

- Radio electric ranging systems are typically used at test ranges for aircraft because the installation of the onboard unit in an aircraft is normally not a problem. This also concerns the determination of positions for the ground units. The effect of great altitude errors in the case of low elevation angles has to be considered.
- Aircraft performance measurements.
- Measurements for aircraft certification.

13.4.5 Laser ranging

In Section 13.4.3 the principle of laser trackers was described. Due to the limited accuracy of the measured elevation and azimuth angles, the position error increases with range. In the case of angle accuracies of 0.01° and a distance of 10 km the resulting position error is about 2 m. The high range accuracy of laser radars therefore, is not fully exploited. To overcome this disadvantage a set of at least three laser trackers can be used. The laser tracker data can be combined using the method of least squares adjustment (Section 13.3.2) or the technique of Kalman filtering (Section 13.3.3) in order to estimate the positions.

Advantages:

- The position of a test aircraft can be determined very accurately (less than 1 m).
- See laser tracker.

Disadvantages:

- See laser tracker.
- All locations of the laser trackers should be determined with high accuracy.
- Each laser tracker normally needs two operators.
- The total system is very expensive.

Range of application:

- Flight trials at test ranges. An example of a typical application is the initial flight test of the GPS at the US Army Yuma Proving Ground, Yuma, Arizona.

13.4.6 Video tracking systems

Tracking of targets can also be performed using video data. For this purpose a reference pattern is used which is stored in a computer. The tracking algorithm determines the displacement of the received video signals from the reference pattern. This displacement can be used as an error signal which controls the pedestal carrying the video system. Most systems contain a tracking window which is centered in the middle of the video picture. Only the information inside this window is used for generating the tracking signals. Some systems are adaptive. This means that the reference pattern is changing if the aspect angle or the size of the target is changing. Concerning the tracking algorithm, different modes are possible: tracking of positive or negative contrast targets, tracking of center, top, bottom, right or left.

Advantages:

- Each target with sufficient contrast can be tracked.
- No cooperative equipment on board the target is necessary.
- Easy to operate.

Disadvantages:

- Only elevation and azimuth can be measured. Therefore, at least two trackers are necessary to determine a three-dimensional position.
- Maximum range is limited and depends on visibility.
- A reference point on the target cannot be precisely determined. Therefore, the tracking accuracy is limited.

Range of application:

- Guidance, e.g., of cinetheodolites.

13.4.7 Inertial navigation systems

Inertial navigation systems (INS) are increasingly used for performance flight testing and in experimental aircraft.

An INS continuously determines the velocity, position and attitude with respect to an Earth-related coordinate system; usually these are geographical coordinates. However, the resolution of the horizontal position outputs of widely used INS systems is only in the order of 20 m. Therefore, the velocity outputs of the INS should be used in order to calculate the horizontal positions. For calculating the altitude, the measured vertical acceleration should be used. But one has to consider that all unaided navigation systems are unstable in the vertical channel since any error in measured vertical acceleration or in the compensation for gravity would cause an unbounded altitude error.

One major disadvantage of INS systems is that due to unavoidable sensor errors the position errors gradually increase with time. Therefore, in order to maintain the errors below a certain threshold it is necessary to correct the INS data using redundant measurements. For doing this the methods described in Section 13.3.2 or 13.3.3 can be used. Sometimes also more simple methods are sufficient, e.g., in the case of short test times (less than 1 min).

Different measurements are used for correcting or aiding INS systems:

- Zero velocities during standstill immediately before takeoff or/and immediately after landing of an aircraft
- Positions of the aircraft during holding at known positions before takeoff or/and immediately after landing
- Heights of the runway during the acceleration phase of the aircraft prior to liftoff
- Video measurements from clearly defined patterns, e.g., threshold markings
- Measurements from radio navigation system, e.g., VOR, DME, GPS
- Tracking radar measurements
- Laser tracker measurements
- Measurements from radio altimeters

The accuracy depends mainly on the measurements which are used for aiding the INS and the elapsed time after an update or before an update.

A typical accuracy of a system which only updates the INS during standstill and during the acceleration phase on the ground, is 1 m for a 1-min period in the horizontal plane, and in the order of 0.3 m for altitude (NLR STALINS Method for Takeoff and Landing Trajectory Measurements). In Section 13.4.9 an integrated system is described which uses tracking radar data, laser tracker data, and DME measurements for correcting the INS.

Advantages:

- Besides the positions, the velocities and attitude angles are also determined. When using a Kalman filter these quantities can be estimated with a high degree of accuracy.
- All relevant data from the INS are nearly continuously determined.
- High frequency motions of the aircraft can be measured very accurately.

Disadvantages:

- Due to the weight and the relatively high price of an INS only measurements in connection with aircraft or helicopters are meaningful.
- Before the measurements an alignment procedure is necessary.
- In order to get the highest accuracy, online evaluation is not possible.

Range of applications:

- Measurements for certification of takeoff and landing performance of aircraft.
- In connection with updates from systems like DME, radio altimeters, and video systems testing of radio navigation systems.
- Using a tracking radar and/or laser tracker for updating the INS testing of all kinds of navigation systems.

13.4.8 GPS

Perhaps GPS will have a great influence concerning flightpath determination in the future; therefore, a short description of this system will be given here.

The US Department of Defense has been developing a GPS (global positioning system) satellite system since the seventies. Although the GPS was originally planned for military purposes only, it can also be used for navigation in civil aviation.

The GPS is based on range measurements between satellites and the users. Accurate clocks are installed on board the satellites. These clocks are used for continuously transmitting time information and orbital data to the users via a so-called pseudo random noise (PRN) code. The onboard equipment of the user contains an accurate time standard so that the transit time of the signals from the satellites to the user can be used to calculate the range. Range measurements from at least four satellites are necessary for determination of a three dimensional position. To determine the position itself, three measurements are needed and the fourth measurement is required for being able to determine the clock error of the user. Modern GPS receivers are using eight satellites for position determination in connection with methods described in Sections 13.3.2 and 13.3.3.

Two different codes are available for determining the transit time between the satellites and the users. The GPS signals are shown in table 13.2.

Table 13.2. GPS signals.

Precision code (P + code):	
Bit frequency	10.23 MHz
Repetition period of the PRN code	7 days
Carrier frequencies	1575.42 MHz and 1227.50 MHz
Course acquisition code (C/A code):	
Bit frequency	1.023 MHz
Repetition period of the PRN code	1 msec
Carrier frequency	1575.42 MHz

Included in the transmitted signals, at a rate of 50 kps, are data on the satellite ephemeris and clock parameters. These data are necessary for calculating the positions of the satellites in the GPS receivers.

Normally only the C/A code can be used. According to the system specification the C/A code gives a system accuracy of about 100 m if the so-called selective availability is switched on. This feature degrades the accuracy to the value which is given above. Without the selective availability the accuracy with modern receivers is less than 10 m (1σ, C/A code). This accuracy was demonstrated by DLR flight tests carried out in the summer of 1991.

The GPS system error is mainly caused by atmospheric and ionospheric effects, inaccurate satellite positions, and clock errors. These errors remain constant during a certain time period and for a limited region and can be taken into account. The so-called differential GPS uses a second receiver which is located on a known position and can therefore determine correction data. These data are transmitted to the receiver on board the vehicle for correcting the positions. The position accuracies which are possible with such a system are better than 1 m.

Advantages:

- Position accuracy using the differential mode is better than 1 m.
- Great range down to the ground.
- Relatively low price.
- Online evaluation is common practice.
- No operators on the ground.

Disadvantages:

- The system is operated by the US Department of Defense and therefore the availability depends only on this institution.

Range of application:

- All applications which were given in the previous chapters. Many additional applications are possible.

13.4.9 Integrated systems

The greatest accuracies for determination of trajectories are possible with integrated systems, which use a combination of different sensors. As an example a short description of the DLR Avionics Flight Evaluation System (AFES) is given. This system uses a tracking radar and a laser tracker on the ground, an inertial navigation system (INS), and a DME interrogator on board a test aircraft. The data of these sensors are combined by optimal filters.

In order to perform real-time evaluation, computers are used at different locations. All elements of this measurement system are linked together by an efficient data transfer system.

AFES consists of the following subsystems:

- reference system,
- telemetry and data system,
- system for measuring multi-path effects, and
- system for measuring the effect of traffic load, e.g., concerning DME.

The most important subsystem is the reference system. The main components of the reference system are:

- a tracking radar and a laser tracker on ground,
- an inertial navigation system, and
- a DME interrogator on board the aircraft.

The tracking radar is an RCA AN/TPQ-39(V). The laser tracker was developed by DLR. The main specifications are summarized in table 13.3.

Table 13.3. DLR laser tracker.

Specifications of the laser tracker	
Wave length	904 10^{-9} m
Pulse power	80 W
Pulse length	30 nsec
Pulse repetition frequency	400 Hz
Receiver band width	3 10^{-9} m
(wave length of visual light	
420 – 760 10^{-9} m)	
Maximum range	10 km
Accuracy (1σ) angle	0.01°
range	0.5 m

The microwave radar and the laser tracker are linked together via a serial data line. While a target is out of range of the laser tracker, the laser tracker is guided by the tracking radar. A computer takes into account the parallax between the tracking radar and the laser tracker. When the target enters the range of the laser tracker, the tracker automatically switches to track mode; this means that slant range, elevation, and azimuth are measured by the laser tracker.

One important part of the reference system is an inertial navigation system on board the test aircraft. The LTN 90 was chosen because this system is used by Lufthansa, and therefore, its maintenance can easily be done by this airline.

If no data from the tracking radar or the laser tracker are available, a DME-interrogator is used. This interrogator (Collins DME-700) is able to measure distances from the aircraft to five different ground stations simultaneously.

The main specifications are:

maximum range	600 km
accuracy (1σ)	100 m
(determined by DLR)	

A combination of positions measured by the ground sensors and the inertial navigation system is used in order to determine the reference trajectories. The errors of the tracking radar and the laser tracker consist mainly of noise. The INS has low-frequency position errors so it seems quite logical to combine the INS with the ground sensors in order obtain a high-precision reference system. This combination is achieved on board the test aircraft by means of a Kalman filter. The filtered reference trajectories are found by adding the INS errors to the navigational results measured by the INS (open loop filter).

One great advantage of this method is that the flightpath trajectories and the velocities can be measured with a high degree of accuracy. The same is true as far as the time intervals between the measurements of the ground sensors are concerned. Flightpath trajectories can even be obtained, when neither the tracking radar nor the laser tracker can track the aircraft for a certain period of time. In this case the flightpath is determined by the INS, where the errors predicted by the Kalman filter have been considered.

When using Kalman filtering, no future but only actual and previous measurements by the ground sensors can be used. The greatest accuracy can be reached by using all acquired measurements. For this purpose the Rauch-Tung-Striebel-Algorithm is used. Obviously, it can only be calculated offline. Therefore, a great amount of data has to be stored during a test flight. The Rauch-Tung-Striebel-Algorithm consists of a normal Kalman filter and a backward smoother (Section 13.3.3).

The high degree of position accuracy, which can be achieved by using the tracking radar or the laser tracker, is not really necessary for many tests. In such a case, the INS can be supported by DME measurements from different ground stations. Usually five stations are used.

The cycle time of the Kalman filter is 2 sec. Only one DME measurement is used for each cycle. When interrogating five DME-stations, a complete sequence takes 10 sec. The Kalman filter in the onboard computer can estimate the DME biases which refer to the individual ground stations. Therefore, the filter has five additional elements in the state vector.

Many flight tests made over Northern Germany have proved that there are enough ground stations. When reaching an altitude of more than 4500 ft, the distance to at least five different stations could be measured.

Concerning the INS a simplified error model is used. The state vector contains the following elements:

$\Delta\lambda$, $\Delta\psi$: the position errors in eastern or northern direction, respectively
ΔV_x, v_y : the velocity errors in eastern or northern direction
α, β, γ : the misalignment angles of the platform

A block diagram of the error model is shown in Figure 13.5. It contains the Schuler loops, couplings of Earth rate, velocity and acceleration. The gyro drifts are modeled as random walk processes. Earlier flight tests have shown that this simplified error model is sufficient for the case in question.

As far as the tracking radar or the laser tracker is concerned, only random errors are modeled. The systematic errors of the ground sensors are determined precisely. Therefore, there is no need for including elements for these errors in the state vector.

Regarding DME measurements, a bias error and a random noise error are taken into account. A great amount of DME data from test flights is available to DLR. The standard deviation (1σ) of the DME errors was always approximately 100 m. The standard deviation of the systematic errors of the various ground stations was about 150 m. These values have also been verified by other organisations.

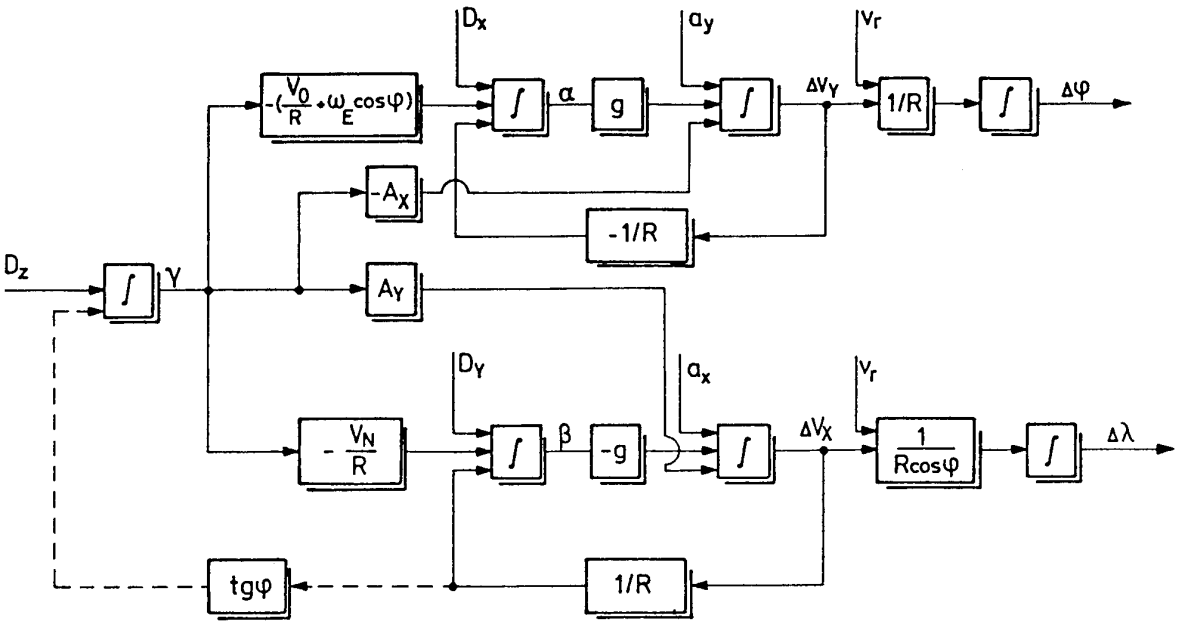

Figure 13.5. Simplified INS error model.

One important measurement is taken before each test flight. In order to do so, the test aircraft stays at an accurate surveyed marker. At this particular point, the preflight alignment of INS is made. When using the backward smoother, this surveyed marker is used as a precise position update, if the test aircraft stops here.

Figure 13.6 shows a block diagram of the total system. Immediately after the test aircraft takes off, the tracking radar as well as the laser tracker switch over to track mode. The data of these two ground sensors are checked and transformed to geographical coordinates. In addition, the covariance matrices of the measured positions are determined. These data are then transmitted to a computer in the central control station, and from there by telemetry to the aircraft. The onboard computer being programmed with the Kalman filter uses this data to support INS. The covariance matrices of the ground sensors are calculated using the method described in Section 13.3.2 and are used as the measurement covariance matrices $R(k)$ for the Kalman filter.

The positions being transmitted from the INS are given in increments of about 20 m. This resolution is not sufficient for the determination of the reference trajectories. Therefore, the integration of the INS velocity components is repeated in the onboard computer. The integration interval is 0.05 sec. This means that the positions are calculated at a rate of 20 Hz. As already mentioned before, the cycle time of the Kalman filter is 2 sec. Only the prediction of two elements of the state vector, representing the position errors, is made at a rate of 20 Hz.

The results of the online Kalman filtering process are used to correct the positions of the INS. These corrected positions are transmitted to the central control station via a telemetry down-link, and used for quick-look presentations.

The different data on board the aircraft are acquired with the aid of the interface system called MUDAS (modular universal data acquisition system). MUDAS enables fast transfer of data between the different data sources and the onboard computer. All MUDAS functions are controlled by a processor. Apart from the functions for the total test system, MUDAS can also accept data from the avionic systems to be tested. For this purpose, the interface system MUDAS is equipped with some extra input/output modules. These modules are suitable for the following data formats:

- ARINC 429
- synchro signals

– parallel digital data
– analogue voltages

During the test flights, all significant data are recorded on magnet tapes. Immediately after each test flight, by using the Rauch-Tung-Striebel backward filter algorithm it is possible to use the recorded data for improving the online trajectories.

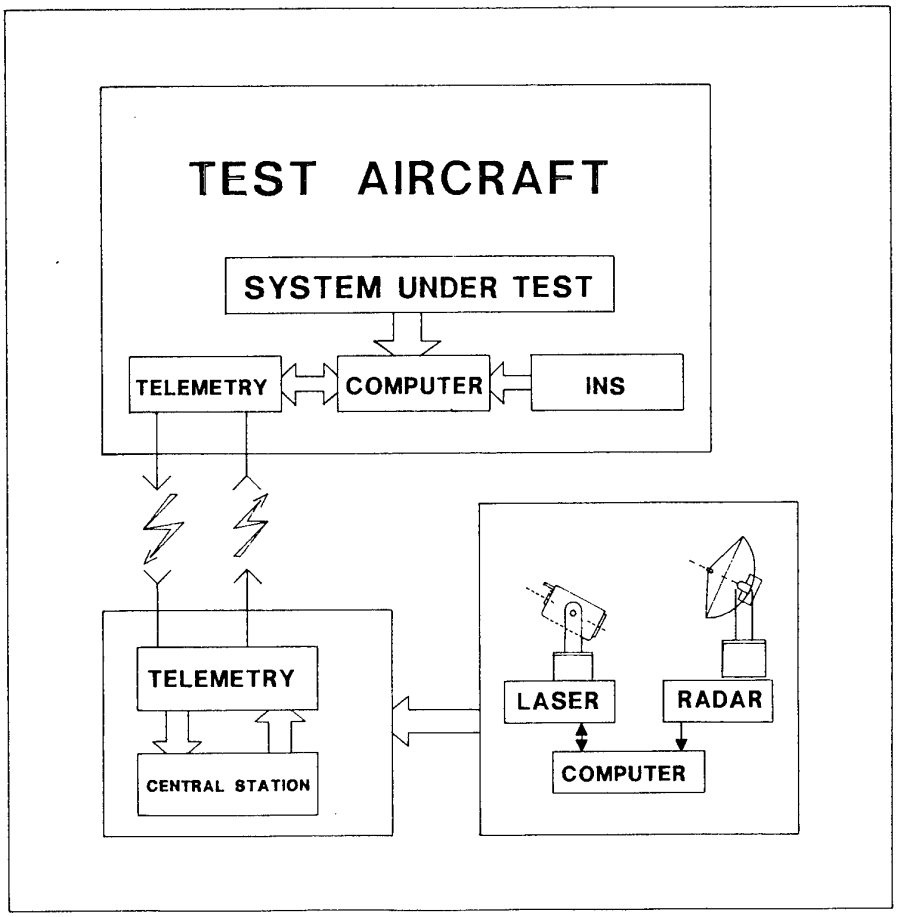

Figure 13.6. AFES block diagram.

The computer in the central station is mainly used for calculating all relevant values for quick-look presentations. The most important peripheral devices are four $x - y$ plotters.

Typical plots are:

– flight track
–position errors of the tested system in northern and southern direction
–diagnostic plot

The diagnostic plot shows the status of all subsystems, e.g., the status of tracking radar.

Table 13.4 indicates the accuracy of the reference system. The errors refer to a polar coordinate system. Its origin is the laser tracker. The correlation time of these errors is relatively long (more than 1 min). Therefore, it is possible to monitor high frequency errors of navigation systems, which are smaller than those shown in table 13.4.

Table 13.4. Accuracy of AFES.

Distance, m	Distance error, m	Azimuth error, deg.
0	---	---
500	0.5	0.010
1 000	0.5	0.006
2 000	0.5	0.003
3 000	0.5	0.004
10 000	0.5	0.005
20 000	5.0	0.008

In the near future the GPS satellite navigation system will be available. In the differential mode, this system has a high navigation accuracy. Therefore, it seems to be logical to use this system for aiding the inertial navigation system instead of the tracking radar.

Today most GPS receivers carry out phase measurements of the carrier frequencies for increasing the navigation accuracy. This technique in connection with the differential mode enables position accuracies below 1 m with the less accurate C/A code.

For aiding the inertial navigation system on board the test aircraft it is intended to use pseudo ranges. This can be done in the same manner as with the DME distances. Instead of the positions of the DME ground stations the position of the GPS satellites will be used. The time uncertainty in the GPS receiver can be modeled as a bias error for the pseudo ranges.

Advantages:

– Online presentation of test results.

– High accuracy for positions, velocities and attitude angles.

– High frequency movements of the test aircraft are not smoothed out.

– Great measurement range.

Disadvantages:

– Many persons are necessary to operate the system.

– Only a well-equipped test aircraft can be used as a test platform.

– High costs for the total system.

Range of applications:

– Testing of a great variety of avionics systems.

13.5 CONCLUSIONS

In this chapter classical mathematical methods for determining flightpath trajectories (method of least squares adjustment) and also modern methods (Kalman filtering) are described. The same is true for the instruments. Cinetheodolites and tracking radars are classical instruments which are still needed for non-cooperative targets. Such targets cannot be equipped with transponders, inertial navigation systems, or other onboard systems.

Concerning cooperative targets like test aircraft, integrated systems are used more and more. This trend is supported due to the availability of modern computers. Online evaluation with such integrated systems is a common practice.

A new generation of sensors will be the GPS. Especially in the so-called differential mode extremely high accuracies are possible. But this system also needs a special GPS equipment on board the target to be tracked.

One important point is not covered in this chapter. This concerns the time synchronization of the different data. It is necessary to look very carefully to this point. In the case of target velocities of 100 m/sec, for example, a time error of 10 msec may cause a position error of 1 m.

13.6 REFERENCES

13.1 Augath, Von Wolfgang and Klaus Kummer, "Die Bezugssysteme der Grundlagenvermessung," Nachrichten der Niedersachs Vermessungs und Katasterverwaltung, 38. Jahrgang, Nr. 4, Hannover, Dec. 1988.

13.2 Edenhofer, P., "A Digital Program Computing the Atmospheric Angle, Range, and Range Rate Error of Satellite Observations," XIXth International Astronautical Congress, Vol. 2, Pergamon Press, 1970.

13.3 Weber, O. and A. Wallenhauer, "Die Flugbahnmessanlagen der DFL - Ausbau, Einsatz und Vergleich," DFL-Bericht Nr. 169, Braunschweig, 1961.

13.4 Skolnik, Merrill I., *Introduction to Radar Systems*, McGraw-Hill Book Company, Inc., New York, 1962.

13.7 BIBLIOGRAPHY

1. Ashkenazi, V., T. Moore, and C. Hill, "Datum: A Report and Software Package for the Transformation and Projection of Coordinates," EUROCONTROL Experimental Centre, EEC Report No. 237, Bretigny-sur-Orge, Dec. 1990.
2. Brokof, U. and H. Haensel, "Das Referenzbahnsystem des Avionik-Flugerprobungssystems (AFES)," DFVLR-IB 112-86/11, Aug. 1986.
3. Brokof, Ulrich and Karlheinz Hurrass, "Integrated Navigation Systems Based on Multiple DME," AGARD Conference Proceedings No. 298, Precision Positioning and Inertial Guidance Sensors, Technology and Operational Aspects, London, Oct. 1980, pp. 14-1, 14-10.
4. Campbell, Steven D. and Raymond R. LaFrey, "Flight Test Results for an Experimental GPS C/A-code Receiver in a General Aviation Aircraft," Navigation; Journal of The Institute of Navigation, Vol. 30, No. 4, 1983–1984.
5. Deutsche Gesellschaft für Ortung und Navigation, "DGPS '91: First International Symposium Real Time Differential Applications of the Global Positioning System," Vol. I and II, Verlag TÜV Rheinland, 1991.
6. Fricke, Kurt, "Grenzen von Genauigkeit und Reichweite beim Laserradar," Optik-Perspektiven für Messtechnik und Signalverarbeitung in der Flugführung. DLFVR-Mitt. 87-21, Nov. 1987.
7. Gelb, Arthur (Ed.), *Applied Optimal Estimation*, The MIT Press, Cambridge, 1974.
8. Hurrass, Karlheinz and Peter Schulz, "Das Avionik-Flugerprobungssystem (AFES) der DFVLR," DFVLR-Mitt. 85-01, 1985.
9. Hurrass, Karlheinz, "Erprobung eines GPS-Empfängers," DFVLR-Mitt. 88-30, 1988.
10. Kayton, Myron and Walter R. Fried, (Eds.), *Avionics Navigation Systems*, John Wiley & Sons, Inc., New York, 1969.
11. Kranenburg, C.G., A. Pool, and A.J.L. Willekens, "STALINS Method for Takeoff and Landing Trajectory Measurements," AIAA J. Aircraft, Vol. 23, No. 3, 1985, pp. 220–225.
12. Latham, R., "Aircraft Positioning with Multiple DME," Navigation: Journal of The Institute of Navigation, Vol. 21, No. 2, 1974.
13. Motorola Inc., "Mini-Ranger Falcon 492 Positioning System, User's Manual and Maintenance Manual," Motorola Document No. 68-P20006U, Motorola, Inc., Tempe, AZ, Sept. 1983.
14. Pool, A., J.L. Simons, G.J.H. Wensink, and A.J.J. Willeken, "A Method for Measuring Take-off and Landing Performance of Aircraft Using an Inertial Sensing System," NLR Report MP 80036 U, Okt. 1980.

15. Rawlings, R.C. and R.A. Harlow, "Flight Trials to Determine the Overall System Performance of Distance Measuring Equipment," Royal Aircraft Establishment, TR 79140, Nov. 1979.

16. Rawlings, R.C., "The Flight Assessment and Applications of DME/DME," The Journal of Navigation, Vol. 34, No. 1, Jan. 1981.

17. Stieler, Bernhard and Karlheinz Hurrass, "Borden-und satellitengestützte Flugbahnvermessung am Beispiel des Avionik-Flugerprobungssystems AFES," Sammelband des Wissenschaftlichen Seminars des Institut für Flugführung der DLR, Braunschweig, 1991.

18. Stieler, B. and H. Winter, "Gyroscopic Instruments and Their Application to Flight Testing," AGARDograph No. 160, Vol. 15, 1982.

19. Torge, Wolfgang, *Geodasie*, Walter de Gruyter, Berlin, 1975.

20. "World Geodetic System 1984 (WGS84) - Auszug aus dem DMA Technical Report," Herausgegeben vom Amt für Militärisches Geowesen, 1988.

Annex

AGARD Flight Test Instrumentation and Flight Test Techniques Series

1. Volumes in the AGARD Flight Test Instrumentation Series, AGARDograph 160

Volume Number	*Title*	*Publication Date*
1.	Basic Principles of Flight Test Instrumentation Engineering (Issue 2) edited by R.W.Borek and A.Pool	1993
2.	In-Flight Temperature Measurements by F.Trenkle and M.Reinhardt	1973
3.	The Measurement of Fuel Flow by J.T.France	1972
4.	The Measurement of Engine Rotation Speed by M.Vedrunes	1973
5.	Magnetic Recording of Flight Test Data by G.E.Bennett	1974
6.	Open and Closed Loop Accelerometers by I.Mclaren	1974
7.	Strain Gauge Measurements on Aircraft by E.Kottkamp, H.Wilhelm and D.Kohl	1976
8.	Linear and Angular Position Measurement of Aircraft Components by J.C. van der Linden and H.A.Mensink	1977
9.	Aeroelastic Flight Test Techniques and Instrumentation by J.W.G. van Nunen and G.Piazzoli	1979
10.	Helicopter Flight Test Instrumentation by K.R.Ferrell	1980
11.	Pressure and Flow Measurement by W.Wuest	1980
12.	Aircraft Flight Test Data Processing — A Review of the State of the Art by L.J.Smith and N.O.Matthews	1980
13.	Practical Aspects of Instrumentation System Installation by R.W.Borek	1981
14.	The Analysis of Random Data by D.A.Williams	1981
15.	Gyroscopic Instruments and their Application to Flight Testing by B.Stieler and H.Winter	1982
16.	Trajectory Measurements for Take-off and Landing Test and Other Short-Range Applications by P. de Benque d'Agut, H.Riebeek and A.Pool	1985
17.	Analogue Signal Conditioning for Flight Test Instrumentation by D.W.Veatch and R.K.Bogue	1986
18.	Microprocessor Applications in Airborne Flight Test Instrumentation by M.J.Prickett	1987
19.	Digital Signal Conditioning for Flight Test by G.A.Bever	1991

2. Volumes in the AGARD Flight Test Techniques Series

Number	*Title*	*Publication Date*
AG237	Guide to In-Flight Thrust Measurement of Turbojets and Fan Engines by the MIDAP Study Group (UK)	1979

The remaining volumes are published as a sequence of Volume Numbers of AGARDograph 300.

Volume Number	*Title*	*Publication Date*
1.	Calibration of Air-Data Systems and Flow Direction Sensors by J.A.Lawford and K.R.Nippress	1983
2.	Identification of Dynamic Systems by R.E.Maine and K.W.Iliff	1985
3.	Identification of Dynamic Systems — Applications to Aircraft Part 1: The Output Error Approach by R.E.Maine and K.W.Iliff	1986
4.	Determination of Antenna Patterns and Radar Reflection Characteristics of Aircraft by H.Bothe and D.McDonald	1986
5.	Store Separation Flight Testing by R.J.Arnold and C.S.Epstein	1986
6.	Developmental Airdrop Testing Techniques and Devices by H.J.Hunter	1987
7.	Air-to-Air Radar Flight Testing by R.E.Scott	1988
8.	Flight Testing under Extreme Environmental Conditions by C.L.Henrickson	1988
9.	Aircraft Exterior Noise Measurement and Analysis Techniques by H.Heller	1991
10.	Weapon Delivery Analysis and Ballistic Flight Testing by R.J.Arnold and J.B.Knight	1992
11.	The Testing of Fixed Wing Tanker & Receiver Aircraft to Establish their Air-to-Air Refuelling Capabilities by J.Bradley and K.Emerson	1992

At the time of publication of the present volume the following volumes were in preparation:

Identification of Dynamic Systems. Applications to Aircraft.
Part 2: Nonlinear Model Analysis and Manoeuvre Design
by J.A.Mulder and J.H.Breeman

Flight Testing of Terrain Following Systems
by C.Dallimore and M.K.Foster

Reliability and Maintainability
by J.Howell

Testing of Flight Critical Control Systems on Helicopters
by J.D.L.Gregory

Flight Testing of Air-to-Air Refuelling of Fixed Wing Aircraft
by J.Bradley and K.Emerson

Introduction to Flight Test Engineering
Edited by F.Stoliker

Space System Testing
by A.Wisdom

Flight Testing of Radio Navigation Systems
by H.Bothe and H.J.Hotop

Simulation in Support of Flight Testing
by L.Shilling

REPORT DOCUMENTATION PAGE

1. Recipient's Reference	2. Originator's Reference	3. Further Reference	4. Security Classification of Document
	AGARD-AG-160 Volume 1 (Issue 2)	ISBN 92-835-0731-2	UNCLASSIFIED/ UNLIMITED

5. Originator Advisory Group for Aerospace Research and Development
North Atlantic Treaty Organization
7 rue Ancelle, 92200 Neuilly sur Seine, France

6. Title BASIC PRINCIPLES OF FLIGHT TEST INSTRUMENTATION ENGINEERING

7. Presented on

8. Author(s)/Editor(s)	9. Date
R.W. Borek and A. Pool (Editors)	March 1994

10. Author's/Editor's Address	11. Pages
See Flyleaf	302

12. Distribution Statement This document is distributed in accordance with AGARD policies and regulations, which are outlined on the back covers of all AGARD publications.

13. Keywords/Descriptors

Flight tests
Data processing
Design criteria
Flight instruments
Test equipment
Handbooks
Data recording

14. Abstract

Volume 1 of the AG 300 series on 'Flight Test Instrumentation' gives a general introduction to the basic principles of flight test instrumentation, the other volumes in the series provide more detailed treatments of selected topics on flight test instrumentation.

Volume 1, first published in 1974, has been used extensively as an introduction for instrumentation courses and symposia, as well as being a reference work on the desk of most flight test and instrumentation engineers. It is hoped that this second edition, fully revised, will be used with as much enthusiasm as the first edition.

In this edition a flight test system is considered to include both the data collection and data processing systems. In order to obtain an optimal data flow, the overall design of these two subsystems must be carefully matched; the detail development and the operation may have to be done by separate groups of specialists.

The main emphasis is on the large automated instrumentation systems used for the initial flight testing of modern military and civil aircraft. This is done because there, many of the problems, which are discussed here, are more critical. It does not imply, however, that smaller systems with manual data processing are no longer used. In general, the systems should be designed to provide the required results at the lowest possible cost. For many tests which require only a few parameters, relatively simple systems are justified, especially if no complex equipment is available to the user. Although many of the aspects discussed in this volume apply to both small and large systems, aspects of the smaller systems are mentioned only when they are of special interest.

The volume has been divided into three main parts. Part 1 defines the main starting points for the design of a flight test instrumentation system, as seen from the points of view of the flight test engineer and the instrumentation engineer. In Part 2 the discussion is concentrated on those aspects which apply to each individual measuring channel and in Part 3 the main emphasis is on the integration of the individual data channels into one data collection system and on those aspects of the data processing which apply to the complete system.

This AGARDograph has been sponsored by the Flight Mechanics Panel of AGARD.

AGARDograph 160 Volume 1 (Issue 2)
Advisory Group for Aerospace Research and Development, NATO
BASIC PRINCIPLES OF FLIGHT TEST INSTRUMENTATION ENGINEERING
R.W. Borek and A. Pool (Editors)
Published March 1994
302 pages

Volume 1 of the AG 300 series on 'Flight Test Instrumentation' gives a general introduction to the basic principles of flight test instrumentation, the other volumes in the series provide more detailed treatments of selected topics on flight test instrumentation.

Volume 1, first published in 1974, has been used extensively as an introduction for instrumentation courses and symposia, as well as being a reference work on the desk of most flight test and instrumentation engineers. It is hoped that this second edition, fully revised, will be used with as much enthusiasm as the first edition.

P.T.O.

AGARD-AG-160
Volume 1 (Issue 2)

Flight tests
Data processing
Design criteria
Flight instruments
Test equipment
Handbooks
Data recording

AGARDograph 160 Volume 1 (Issue 2)
Advisory Group for Aerospace Research and Development, NATO
BASIC PRINCIPLES OF FLIGHT TEST INSTRUMENTATION ENGINEERING
R.W. Borek and A. Pool (Editors)
Published March 1994
302 pages

Volume 1 of the AG 300 series on 'Flight Test Instrumentation' gives a general introduction to the basic principles of flight test instrumentation, the other volumes in the series provide more detailed treatments of selected topics on flight test instrumentation.

Volume 1, first published in 1974, has been used extensively as an introduction for instrumentation courses and symposia, as well as being a reference work on the desk of most flight test and instrumentation engineers. It is hoped that this second edition, fully revised, will be used with as much enthusiasm as the first edition.

P.T.O.

AGARD-AG-160
Volume 1 (Issue 2)

Flight tests
Data processing
Design criteria
Flight instruments
Test equipment
Handbooks
Data recording

AGARDograph 160 Volume 1 (Issue 2)
Advisory Group for Aerospace Research and Development, NATO
BASIC PRINCIPLES OF FLIGHT TEST INSTRUMENTATION ENGINEERING
R.W. Borek and A. Pool (Editors)
Published March 1994
302 pages

Volume 1 of the AG 300 series on 'Flight Test Instrumentation' gives a general introduction to the basic principles of flight test instrumentation, the other volumes in the series provide more detailed treatments of selected topics on flight test instrumentation.

Volume 1, first published in 1974, has been used extensively as an introduction for instrumentation courses and symposia, as well as being a reference work on the desk of most flight test and instrumentation engineers. It is hoped that this second edition, fully revised, will be used with as much enthusiasm as the first edition.

P.T.O.

AGARD-AG-160
Volume 1 (Issue 2)

Flight tests
Data processing
Design criteria
Flight instruments
Test equipment
Handbooks
Data recording

AGARDograph 160 Volume 1 (Issue 2)
Advisory Group for Aerospace Research and Development, NATO
BASIC PRINCIPLES OF FLIGHT TEST INSTRUMENTATION ENGINEERING
R.W. Borek and A. Pool (Editors)
Published March 1994
302 pages

Volume 1 of the AG 300 series on 'Flight Test Instrumentation' gives a general introduction to the basic principles of flight test instrumentation, the other volumes in the series provide more detailed treatments of selected topics on flight test instrumentation.

Volume 1, first published in 1974, has been used extensively as an introduction for instrumentation courses and symposia, as well as being a reference work on the desk of most flight test and instrumentation engineers. It is hoped that this second edition, fully revised, will be used with as much enthusiasm as the first edition.

P.T.O.

AGARD-AG-160
Volume 1 (Issue 2)

Flight tests
Data processing
Design criteria
Flight instruments
Test equipment
Handbooks
Data recording

In this edition a flight test system is considered to include both the data collection and data processing systems. In order to obtain an optimal data flow, the overall design of these two subsystems must be carefully matched; the detail development and the operation may have to be done by separate groups of specialists.

The main emphasis is on the large automated instrumentation systems used for the initial flight testing of modern military and civil aircraft. This is done because there, many of the problems, which are discussed here, are more critical. It does not imply, however, that smaller systems with manual data processing are no longer used. In general, the systems should be designed to provide the required results at the lowest possible cost. For many tests which require only a few parameters, relatively simple systems are justified, especially if no complex equipment is available to the user. Although many of the aspects discussed in this volume apply to both small and large systems, aspects of the smaller systems are mentioned only when they are of special interest.

The volume has been divided into three main parts. Part 1 defines the main starting points for the design of a flight test instrumentation system, as seen from the points of view of the flight test engineer and the instrumentation engineer. In Part 2 the discussion is concentrated on those aspects which apply to each individual measuring channel and in Part 3 the main emphasis is on the integration of the individual data channels into one data collection system and on those aspects of the data processing which apply to the complete system.

This AGARDograph has been sponsored by the Flight Mechanics Panel of AGARD.

ISBN 92-835-0731-2

In this edition a flight test system is considered to include both the data collection and data processing systems. In order to obtain an optimal data flow, the overall design of these two subsystems must be carefully matched; the detail development and the operation may have to be done by separate groups of specialists.

The main emphasis is on the large automated instrumentation systems used for the initial flight testing of modern military and civil aircraft. This is done because there, many of the problems, which are discussed here, are more critical. It does not imply, however, that smaller systems with manual data processing are no longer used. In general, the systems should be designed to provide the required results at the lowest possible cost. For many tests which require only a few parameters, relatively simple systems are justified, especially if no complex equipment is available to the user. Although many of the aspects discussed in this volume apply to both small and large systems, aspects of the smaller systems are mentioned only when they are of special interest.

The volume has been divided into three main parts. Part 1 defines the main starting points for the design of a flight test instrumentation system, as seen from the points of view of the flight test engineer and the instrumentation engineer. In Part 2 the discussion is concentrated on those aspects which apply to each individual measuring channel and in Part 3 the main emphasis is on the integration of the individual data channels into one data collection system and on those aspects of the data processing which apply to the complete system.

This AGARDograph has been sponsored by the Flight Mechanics Panel of AGARD.

ISBN 92-835-0731-2

In this edition a flight test system is considered to include both the data collection and data processing systems. In order to obtain an optimal data flow, the overall design of these two subsystems must be carefully matched; the detail development and the operation may have to be done by separate groups of specialists.

The main emphasis is on the large automated instrumentation systems used for the initial flight testing of modern military and civil aircraft. This is done because there, many of the problems, which are discussed here, are more critical. It does not imply, however, that smaller systems with manual data processing are no longer used. In general, the systems should be designed to provide the required results at the lowest possible cost. For many tests which require only a few parameters, relatively simple systems are justified, especially if no complex equipment is available to the user. Although many of the aspects discussed in this volume apply to both small and large systems, aspects of the smaller systems are mentioned only when they are of special interest.

The volume has been divided into three main parts. Part 1 defines the main starting points for the design of a flight test instrumentation system, as seen from the points of view of the flight test engineer and the instrumentation engineer. In Part 2 the discussion is concentrated on those aspects which apply to each individual measuring channel and in Part 3 the main emphasis is on the integration of the individual data channels into one data collection system and on those aspects of the data processing which apply to the complete system.

This AGARDograph has been sponsored by the Flight Mechanics Panel of AGARD.

ISBN 92-835-0731-2

In this edition a flight test system is considered to include both the data collection and data processing systems. In order to obtain an optimal data flow, the overall design of these two subsystems must be carefully matched; the detail development and the operation may have to be done by separate groups of specialists.

The main emphasis is on the large automated instrumentation systems used for the initial flight testing of modern military and civil aircraft. This is done because there, many of the problems, which are discussed here, are more critical. It does not imply, however, that smaller systems with manual data processing are no longer used. In general, the systems should be designed to provide the required results at the lowest possible cost. For many tests which require only a few parameters, relatively simple systems are justified, especially if no complex equipment is available to the user. Although many of the aspects discussed in this volume apply to both small and large systems, aspects of the smaller systems are mentioned only when they are of special interest.

The volume has been divided into three main parts. Part 1 defines the main starting points for the design of a flight test instrumentation system, as seen from the points of view of the flight test engineer and the instrumentation engineer. In Part 2 the discussion is concentrated on those aspects which apply to each individual measuring channel and in Part 3 the main emphasis is on the integration of the individual data channels into one data collection system and on those aspects of the data processing which apply to the complete system.

This AGARDograph has been sponsored by the Flight Mechanics Panel of AGARD.

ISBN 92-835-0731-2