AFRL-VS-TR-2002-1127

AFRL-VS-
TR-2002-1127

CHALLENGES IN THE ACCEPTANCE/LICENSING OF A MOBILE BALLISTIC MISSILE RANGE SAFETY TECHNOLOGY (BMRST) SYSTEM

Chris Bartone
Lt. Col Rembert N. Schofield
Ron Ostroff

Ohio University
Avionics Engineering Center
105 Research Technology Center
Athens, OH 45701-2979

30 November 2002

Final Report

20031017 155

APPROVED FOR PUBLIC RELEASE; DISTRIBUTION IS UNLIMITED.

AIR FORCE RESEARCH LABORATORY
Space Vehicles Directorate
3550 Aberdeen Ave SE
AIR FORCE MATERIEL COMMAND
KIRTLAND AIR FORCE BASE, NM 87117-5776

AFRL-VS-TR-2002-1127

Using Government drawings, specifications, or other data included in this document for any purpose other than Government procurement does not in any way obligate the U.S. Government. The fact that the Government formulated or supplied the drawings, specifications, or other data, does not license the holder or any other person or corporation; or convey any rights or permission to manufacture, use, or sell any patented invention that may relate to them.

This report has been reviewed by the Public Affairs Office and is releasable to the National Technical Information Service (NTIS). At NTIS, it will be available to the general public, including foreign nationals.

If you change your address, wish to be removed from this mailing list, or your organization no longer employs the addressee, please notify AFRL/VSE, 3550 Aberdeen Ave SE, Kirtland AFB, NM 87117-5776.

Do not return copies of this report unless contractual obligations or notice on a specific document requires its return.

This report has been approved for publication.

SANDRA H. SLIVINSKY, DR IV
Project Manager

TIMOTHY R. WILLIAMS, Colonel, USAF
Chief, Integrated Experiments Division

REPORT DOCUMENTATION PAGE

Form Approved
OMB No. 0704-0188

Public reporting burden for this collection of information is estimated to average 1 hour per response, including the time for reviewing instructions, searching existing data sources, gathering and maintaining the data needed, and completing and reviewing this collection of information. Send comments regarding this burden estimate or any other aspect of this collection of information, including suggestions for reducing this burden to Department of Defense, Washington Headquarters Services, Directorate for Information Operations and Reports (0704-0188), 1215 Jefferson Davis Highway, Suite 1204, Arlington, VA 22202-4302. Respondents should be aware that notwithstanding any other provision of law, no person shall be subject to any penalty for failing to comply with a collection of information if it does not display a currently valid OMB control number. PLEASE DO NOT RETURN YOUR FORM TO THE ABOVE ADDRESS.

1. REPORT DATE *(DD-MM-YYYY)*
30-11-02

2. REPORT TYPE
Final

3. DATES COVERED *(From - To)*
07 Sep 00 -31 Jan 03

4. TITLE AND SUBTITLE
Challenges in the Acceptance/Licensing of a Mobile Ballistic Missile Range Safety Technology (BMRST) System

5a. CONTRACT NUMBER
F29601-99-C-0176

5b. GRANT NUMBER

5c. PROGRAM ELEMENT NUMBER
63311F

5d. PROJECT NUMBER
4793

5e. TASK NUMBER
BM

5f. WORK UNIT NUMBER
AA

6. AUTHOR(S)
Chris Bartone, * Ron Ostroff, ** Lt. Col Rembert Schofield

7. PERFORMING ORGANIZATION NAME(S) AND ADDRESS(ES)
Ohio University
Avionics Engineering Center
105 Research Technology
Center
Athens, OH 45701-2979

8. PERFORMING ORGANIZATION REPORT NUMBER

9. SPONSORING / MONITORING AGENCY NAME(S) AND ADDRESS(ES)
AFRL/VSE
3550 Aberdeen Avenue SE
Kirtland AFB, NM 87117-5776

10. SPONSOR/MONITOR'S ACRONYM(S)

11. SPONSOR/MONITOR'S REPORT NUMBER(S)
AFRL-VS-TR-2002-1127

12. DISTRIBUTION / AVAILABILITY STATEMENT
Approved for public release; distribution is unlimited.

13. SUPPLEMENTARY NOTES
* ENSCO 1980 N Atlantic Ave Suite 230 Cocoa Beach, FL 32931 ** Florida Air National Guard 100400 Phillips Parkway (CCAFS) Patrick AFB, FL 32925

14. ABSTRACT
The acceptance and licensing process of the Ballistic Missile Range Safety Technology (BMRST) system is discussed. BMRST utilizes Global Positioning System in conjunction with an inertial navigation system on board a rocket vehicle to provide precise, remote, location monitoring of the missile during its launch phase. Included in the monitoring system is a mobile operations center (MOR) for receiving signals from the in-flight missile. The MOR includes a command destruct system that allows mission aborting if the missile malfunctions or veers off course. The uniqueness of design and operation results in challenges for the acceptance/licensing process. Satellite track testing, aircraft operation ground test, launch shadow tests, BMRST command system testing, launch vehicle demonstration, and launch vehicle acceptance flights are discussed in detail. Coordination with the DOD ranges, the Range Commanders Council, and the Federal Aviation Administration is addressed also.

15. SUBJECT TERMS
range safety, Global Positioning System, missile flight termination, launch monitoring, range safety system acceptance, range safety system certification, mobile range safety, missile launch, command destruct systems, remote launch monitoring

16. SECURITY CLASSIFICATION OF:			17. LIMITATION OF ABSTRACT	18. NUMBER OF PAGES	19a. NAME OF RESPONSIBLE PERSON
a. REPORT	b. ABSTRACT	c. THIS PAGE	Unlimited	32	Dr. Sandra Slivinsky
UNCLASSIFIED	UNCLASSIFIED	UNCLASSIFIED			19b. TELEPHONE NUMBER *(include area code)* 505-846-7222

Standard Form 298 (Rev. 8-98)
Prescribed by ANSI Std. 239.18

TABLE OF CONTENTS

		Page
LIST OF FIGURES		v
LIST OF ACRONYMS		vi
ACKNOWLEDGMENTS		viii
I.	ABSTRACT	1
II.	INTRODUCTION	1
	A. Overview	1
	B. BMRST Ground Segment	3
	C. BMRST Airborne Segment	5
III.	DEMONSTRATION PROGRAM	6
	A. Cost	6
	B. One BMRST	7
	C. BMRST Operation and Maintenance by FLANG	7
	D. Mobility	8
IV.	BMRST ACCEPTANCE/ACCEPTANCE BY THE EASTERN RANGE	10
	A. History	10
	B. A New Way of Operational Acceptance	10
	C. BMRST Acceptance Challenge	11
V.	FAA "LICENSING" OF THE BMRST	12
	A. FAA Actions for Range Safety Systems	12
	B. Baseline Acceptance	14
	C. Licensing	15
	D. Safety Approval	16
VI.	BMRST ACCEPTANCE/BASELINE PLAN	16
	A. Satellite Track Testing	16
	B. Aircraft Operational Ground (AOG) Tests	17
	C. Launch Shadow Test	17
	D. BMRST Command System Testing	18
	E. Launch Vehicle Testing	19
	F. Acceptance Flights	19
VII.	SUMMARY AND CONCLUSIONS	19

VIII. REFERENCES 20

LIST OF FIGURES

Figures		Page
1.	Overall BMRST System	2
2.	Dual Redundant Strings within BMRST Mobile Control Center	4
3.	The BMRST GPS/INS Tracking Unit	6
4.	BMRST Van Loading in C-17 Aircraft	9
5.	Loading of BMRST Antenna in C-17 Aircraft	9
6.	FAA Recognized Launch Sites	14

LIST OF ACRONYMS

ACME	Automated Command Message Evaluation
ACU	antenna control unit
ADM	acceptance decision memorandum
AFB	Air Force Base
AFRL	Air Force Research Laboratory
AK	Alaska
AMP	acceptance management plan
AOG	Aircraft Operational Ground
AST	Associate Administrator for Commercial Space Transportation
BET	Best Estimate Trajectory
BMRST	Ballistic Missile Range Safety Technology
CDS	Command Destruct System
COTS	commercial off-the-shelf
CRD	command receiver/decoder
DGPS	differential GPS
ER	Eastern Range
EWR	Eastern and Western Ranges
FAA	Federal Aviation Administration
FLANG	Florida Air National Guard
FOC	Full Operational Certification
GITU	GPS Inertial Tracking Unit
GPS	Global Positioning System
HDD	High Density Data
IIP	instantaneous impact point
INS	Inertial Navigation System
IOC	Interim Operational Certification
IRIG	Inter-range Instrumentation Graph (Time Data Format)
LG	Logistics Group
LV	launch vehicle
MFCO	Mission Flight Control Officer
MOC	Mobile Operations Center
NPRM	Notice of Proposed Rulemaking
OCST	Office of Commercial Space Transportation
PI	program introduction
QRLV	Quick Reaction Launch Vehicle
RF	radio frequency
RTS	range technical services
SEP	spherical error probablity
SIGI	Space Integrated GPS/INS
SOAB	Systems Operational Acceptance Board
SOAN	Systems Operational Acceptance Notice
TMIG	Telemetered Inertial Guidance
TOC	Temporary Operational Certification
TSO	Telemetry Systems Officer
UHF	Ultra High Frequency
UPS	Uninteroperable Power Supply

VAFB Vandenburg Air Force Base
WR Western Range

ACKNOWLEDGMENTS

The authors would like to sincerely thank our program sponsor Dr. Sandra Slivinsky from the Air Force Research Laboratory, as well as, the Program Technical Director, Mr. Chuck Wilborn from Aero Thermo Technology, Incorporated. Additionally, we would like to thank all members of the BMRST development team to include Honeywell International (Marty Seffrin, Mike Ficarrotta), L3-EMP Incorporated, Orbital Incorporated, Draper, the FAA, ENSCO, the FLANG, and Ohio University.

I. ABSTRACT

This paper describes the challenges in the acceptance and licensing of a mobile range safety system. The paper details, in particular, the Ballistic Missile Range Safety Technology (BMRST) System that has been developed by the Air Force Research Laboratory (AFRL), Space Vehicles Directorate, Ballistic Missile Technology program. The BMRST Program is to develop and to demonstrate a "certifiable" mobile launch range tracking and control system based upon the Global Positioning System (GPS) that can support military and commercial space launch vehicles for range safety applications. The BMRST System does provide precise remote position using the GPS and an Inertial Navigation System (INS). The BMRST equipment installed on-board the launch vehicle transmits information using an S-band data link to two mobile ground tracking antenna systems that are part of the BMRST Mobile Operations Center (MOC). The BMRST also has a Command Destruct System (CDS) capability. The uniqueness of design and operation results in challenges for the acceptance/licensing process. This paper will outline and discuss the overall BMRST Acceptance/Licensing Program including Satellite Track Testing, Aircraft Operation Ground Tests, Launch Shadow Tests, BMRST command system testing, Launch Vehicle Demonstration, and Launch Vehicle Acceptance Flights. Coordination with the DoD ranges, the Range Commanders Council, and the Federal Aviation Administration (FAA) will also be addressed.

II. INTRODUCTION

A. Overview

The BMRST is a mobile range safety system that utilizes a combined GPS/INS airborne component, a mobile ground tracking control vehicle, and is an outgrowth of the early Missile Technology Demonstration programs that were AFRL sponsored [1]. The BMRST System is meant to provide a means for tracking high dynamic missiles and space launch vehicles. The BMRST is designed to support military and commercial space launch vehicles to aid in the range safety function by providing precise remote position of GPS-only, INS-only, and a blended GPS/INS position and velocity estimates. The BMRST airborne segment is considered one of the two independent data sources that is required per EWR-127-1, see Reference [2]. (The other independent position and velocity data source for the launch vehicle is the host INS, i.e., Telemetered Inertial Guidance (TMIG) data stream.) Navigational information from the airborne vehicle is transmitted via S-band (2.2-2.3 GHz) to the BMRST ground tracking system. The data telemetered down to the ground segment is recorded and further processed into parameters of interest to Mission Flight Control Officer (MFCO), including the launch vehicles

be transmitted up to the airborne UHF receiver by the MFCO via the ground system, see Figure 1. The two independent data streams in the BMRST system concept, 1) the BMRST Airborne Data Stream (GPS-only, INS-only, or blended GPS/INS), and 2) the host vehicle INS data stream (i.e., TMIG) can be decoded simultaneously. Because the BMRST System provides two independent data sources, it has the potential to replace radar tracking within the range safety system. It is also emphasized that while a DoD sponsor is developing the BMRST system, it could potentially benefit commercial launch providers and have added value for lower-cost access to space for all its users. The BMRST System provides unique mobile capabilities have not been previously available to military and commercial launch providers. Additional information on the BMRST System can be found in the Florida Air National Guard (FLANG) program introduction document [3].

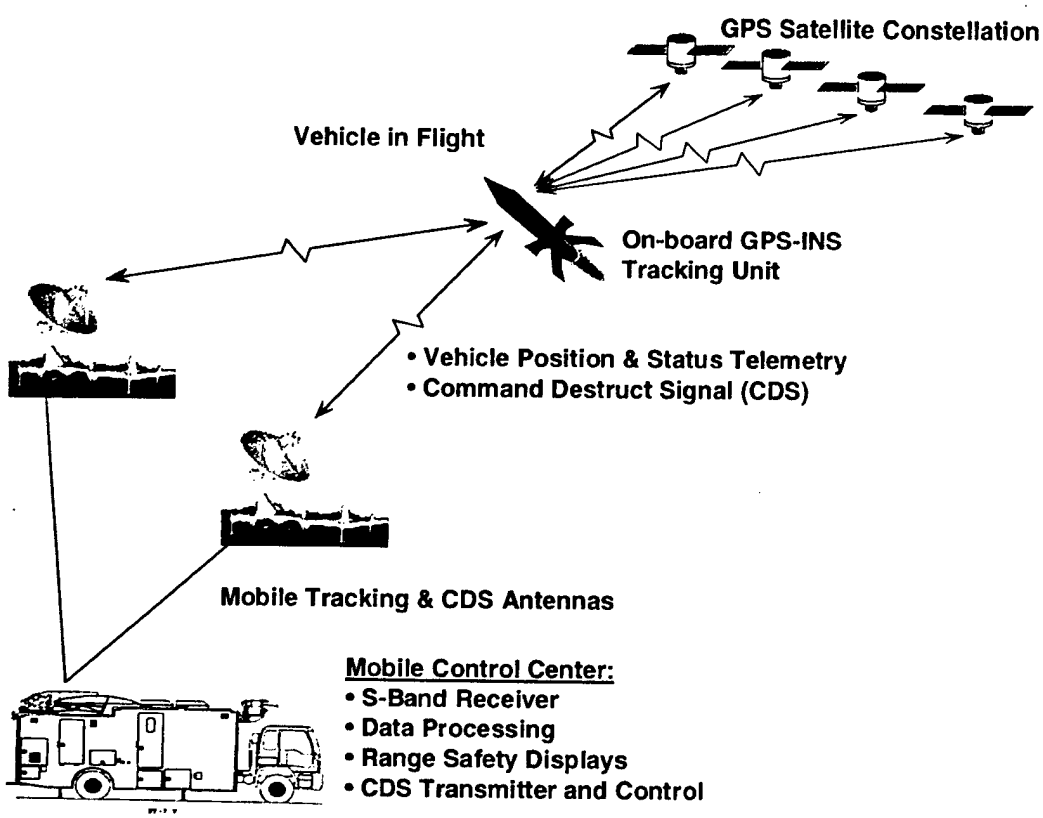

Figure1. Overall BMRST System

The BMRST Program has three key goals:

1. Develop, demonstrate, and qualify a "certifiable" on-board GPS-based tracking system for high dynamic missile and space launch environments.
2. Develop, demonstrate, and qualify a "certifiable" rapidly re-configurable ground tracking and control system that meets all current range requirements while using GPS-based metric tracking data in place of radar derived metric tracking data.
3. Demonstrate that both flight and ground components can be based upon readily available commercial/military technologies that provide low acquisition and maintenance costs.

Selected systems must have a low risk of parts obsolescence or be based upon technologies that are modular in nature and, therefore, allow for technology upgrades. Both flight and ground systems must be based upon products that are likely to be supported well into the future by suppliers.

B. BMRST Ground Segment

The ground segment of the BMRST is a complete command and tracking system appropriate for use at either the launch site or downrange sites for range safety. It can operate independently of other tracking systems, but can incorporate and display data from other systems. The BMRST ground segment can also be used to augment existing systems. It is transportable either by air (e.g., C-17/C-5) or ground, and contains its own power generating capability. The BMRST MOC, outlined in Figure 1, is 37 feet long, has a 28-foot control room, and is based on a General Motors Corporation T Series F7 chassis with 53,000 pounds gross vehicle weight rating. The enclosure is an all welded aluminum body with no exposed seams or fasteners manufactured by Frontline, Communications. The BMRST MOC has two independent sides that add redundancy to the system for range safety function in accordance with EWR 127-1. Figure 2 illustrates this dual string capability in an overall block diagram of the BMRST MOC. It consists of transmit andreceive antennas, antenna controllers, radio frequency receivers, telemetry decommutators, and computation and display equipment. It also supports the capability to integrate a differential GPS (DGPS) reference base station and associated antenna. It receives data transmitted from the flight segment, processes the data, and computes and displays the IIP of the vehicle related to the theoretical trajectory as well as impact limit lines. The vehicle translational and rotational states are also displayed for comparison with those of the theoretical trajectory. The ground system includes a CDS consisting of a command sequencing and encoding system, and antennas for sending commands to the on-board flight termination system. The CDS also includes antennas

The BMRST MOC van is 37 feet long and has a 28-foot control room. It is based on a General Motors Corporation T-Series F7 chassis with 53,000 pounds gross vehicle weight rating. The enclosure, manufactured by Frontline Communications, is an all welded aluminum body with no exposed seams or fasteners. The van and the mobile tracking and CDS antennas are transportable either by air (e.g., C-17/C-5) or ground, and incorporate their own power generating capability.

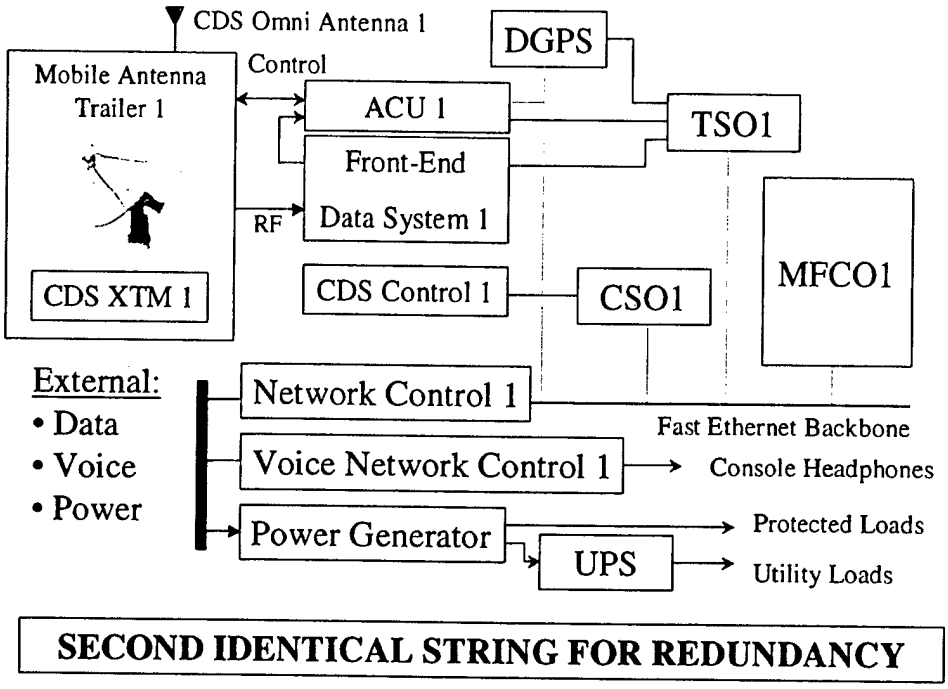

Figure 2. Dual Redundant Strings within BMRST Mobile Control Center

One of the unique design features/capabilities of the BMRST ground segment are the transportable antenna trailers that contain a combined 4.3 meter diameter S-band telemetry reception and CDS transmission antenna. The antenna has a combined S-band (right and left handed polarization feed) and UHF spiral helix feed at the focal point of the parabolic reflector. The S-band antenna 3 dB beamwidth is 2.1° while the UHF 3 dB beamwidth is 11.2°. The antenna has a minimum gain of 37.0 dBi and 22.5 dBi for S-band and UHF band, respectively [4]. With each antenna driven from its own antenna control unit (ACU), care must be taken in the search algorithm if the data from the S-band telemetery stream is momentarily lost. This search to reacquire S-band telemetry is accomplished in a graceful degradation from an auto track mode to a program track mode. If the S-band telemetry has not been received, and the launch vehicle is still within range of the CDS omni-antenna coverage (as determined pre-mission, and including a 12 dB link margin per [2]), then the antenna dish may continue to

"worst case" position and velocity, is projected outside the test corridors, then a CDS signal is transmitted through the CDS directional antenna, while still in program track mode.

C. BMRST Airborne Segment

The airborne segment of the BMRST consists primarily of a 12-channel GPS receiver, a navigation grade INS, and a 4-Watt S-band telemetry transmitter. These three units, along with interface hardware and software are contained within a Honeywell H-764G GPS Inertial Tracking Unit (GITU). (This unit is also referred to as a Space Integrated GPS/INS (SIGI) with the added S-band telemetry transmitter enclosed.) This unit has many improvements over its predecessor in terms of hardware and software, vent valves for the chassis, and a formal qualification test for the flight software. The software within the GITU has also been developed in accordance with a tailored version of DOD-STD-2167A [5]. The SIGI is a closely-coupled GPS/INS navigator that provides three simultaneous navigation outputs including INS-only, GPS-only, and a blended GPS/INS solution that employs a Kalman filter to offer the best estimation of the vehicle position, velocity, acceleration, and attitude. Within the inertial sensor assembly, Honeywell digital DG1320 ring laser gyros have about a 0.01 deg/hr drift rate, and the AlliedSignal QA2000 accelerometers can measure down to approximately 50 •g's. The GITU has typical accuracy of 13 meters (Spherical Error Probable-SEP) in position and velocity estimation within 0.02 m/s (1 σ) under nominal conditions. Figure 3 illustrates a photograph of the GITU unit.

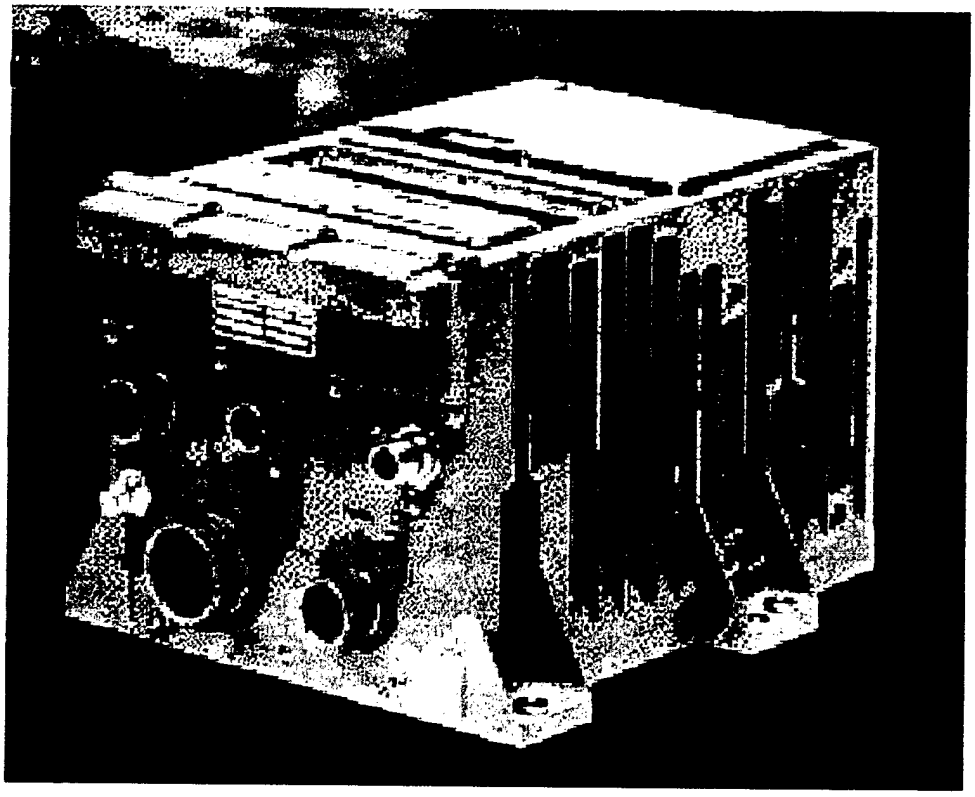

Figure 3. The BMRST GPS/INS Tracking Unit

III. DEMONSTRATION PROGRAM

A. Cost Control

Costs have been categorized in terms of development costs and operation costs. The key element to control development cost was to avoid the use of custom hardware and software by leveraging available commercial off-the-shelf (COTS) equipment. The key element to control BMRST's operational costs was to design and build it in such a way that it required only a small numbers operators and maintainers without a high degree of specialization. The operational cost control also includes a short, one- to two-week, set up time prior to the launch.

B. One BMRST

One of the fundamental challenges in the BMRST development is that there is only one system. This has produced real logistic and technical challenges. One system demands most of the pre-launch software development and testing be accomplished on the "operational" system. This approach reduces operation and maintenance "hands-on" from the system operators and maintainers. This presents a significant concern from an acceptance and deployment perspective. The envisioned concept would be to develop any launch specific software using an off-line, non-operational system. The software would be tested and loaded onto the operational system for final testing. This approach would reduce the "downtime" (non mission supporting) the BMRST System would experience. Testing new configurations has often caused reconfiguration of the system and additional development pains. Most of the times these new items were fully integrated into the BMRST baseline configuration, but on others, as things did not work, the previous baseline configuration was re-installed which lead to increased development time and increased workload on maintaining the configuration control of the MOC.

C. BMRST Operation and Maintenance by FLANG

The FLANG is partnered with the AFRL to assist in the development, and perform the operation and maintenance of the BMRST. Because the BMRST is being developed to support launches for both federal and non-federal operations, FLANG took the lead in this role, which fits in well with its mission. Specifically, on the Eastern Range (ER), the FLANG unit (114th Combat Communications Squadron) has the experience and expertise to operate and maintain the BMRST since their federally tasked mission relates to BMRST very well. These BMRST supported launch operations would be planned from both federal and non-federal locations. With the initial development of the BMRST complete, it has been delivered to FLANG for mission support. The BMRST is planned for eventual acceptance from the 45th Space Wing, Patrick Air Force Base, Florida for operations from, and augmentation of the Eastern Range.

For the BMRST demonstration operation in the QRLV-1 on 22 March 2001 from Kodiak, Alaska, the FLANG performed as the range operations officer.

The FLANG operates in a daily status of Title 32 (state). When supporting a federal mission, the FLANG operates in a Title 10 (federal) status. The mission of Space Launch is a federal mission. Therefore, when the FLANG operates the BMRST in support of any space launch it would be as a Title 10 guardsperson. The Chain of Command would be the active duty. If supporting the Eastern Range, then the FLANG would report to the 45th Space Wing

commander. When the FLANG performs maintenance on the BMRST, it would be as a Title 32 guardsperson. The equipment currently resides on a FLANG property account, but remains federal equipment. The BMRST has the potential to be scheduled on the Eastern Range by the 45th Space Wing. The system would function as a "support" entity to the 45th Space Wing on the Eastern Range or to any "customer" requiring a range safety system. The BMRST could also be used to support some user requirements, if applicable.

The MFCOs for QRLV-1 were supplied by the 45th Space Wing. The potential exists for the FLANG to have MFCOs trained at the 45th Space Wing to support launches from the Eastern Range.

When FLANG provides launch services to commercial entities, the FLANG will operate in a Title 10 status. Costs associated with travel, per diem, and maintenance resulting from support of the launch will be charged to the launch customer.

D. Mobility

Probably the most unique aspect of the BMRST System is the mobility it presents to be integrated into a launch site in short time and provide a range safety function. From a quick response standpoint this is very valuable, however, from an initial acceptance/licensing perspective it provides a unique challenge in terms of approving a system that may only be available part of the time, and may come and go. Integration of the BMRST with the host launch site can come in many forms. The BMRST, or a copy of it, could be a launch site's main range safety system that comes and goes, it could be used to augment a range in terms of a down-range, range safety assets for certain launch vehicles, or it could be a ranges primary, and "permanent" range safety system. More detail will be discussed later on these options.

The unique ability of the BMRST to be mobile can make it less vulnerable to weather concerns, as well as enabling support from any location. The system is certified by the Air Force Air Mobility Command for transport aboard a C-17/C-5. During QRLV-1, the initial loading required approximately eight hours. Figures 4 and 5 show the loading of the BMRST MOC and accompanying antenna trailers for the QRLV-1 mission in the C-17. The initial off loading at Kodiak, AK required only about 2.5 hours. For the return trip to Florida, the loading required approximately 3 hours. The off-loading in Florida required only 1 hour.

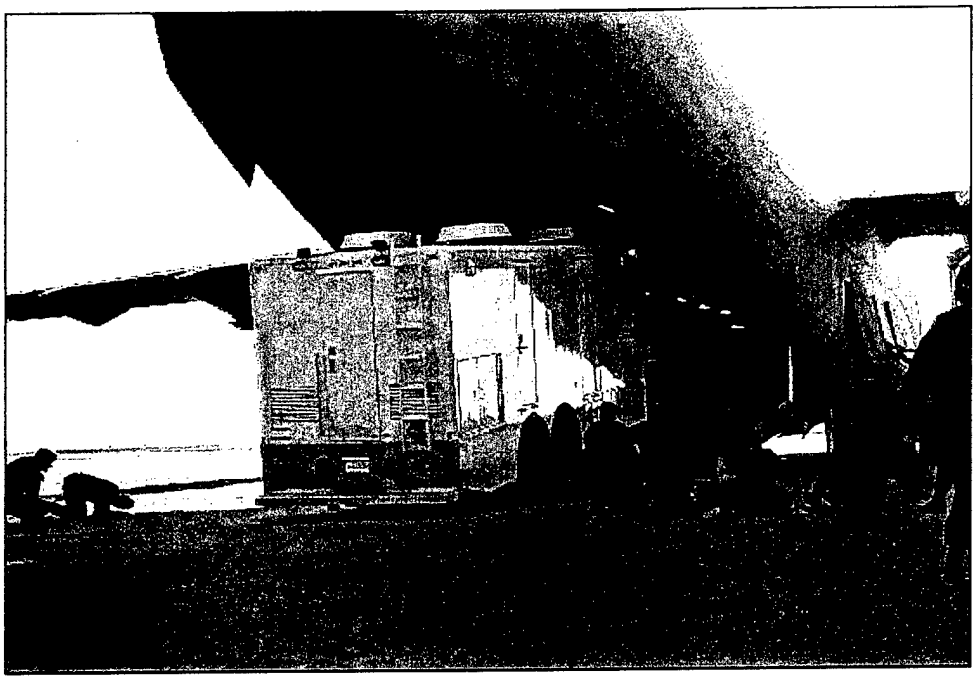

Figure 4. BMRST Van Loading inC-17 Aircraft

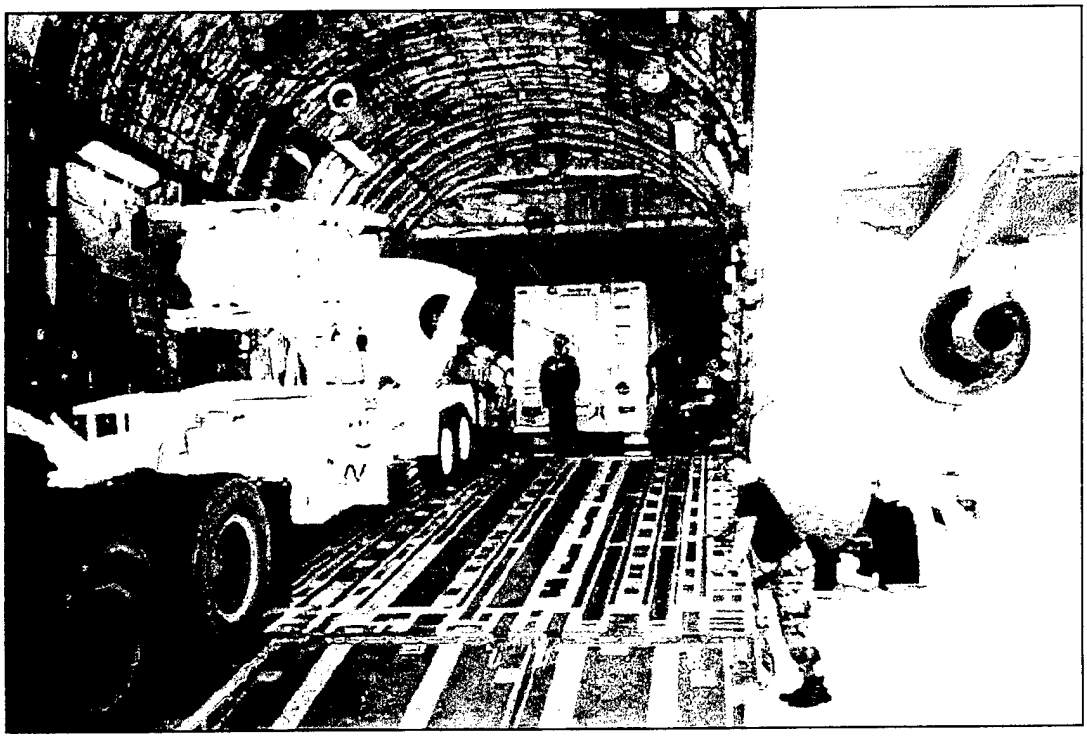

Figure 5. Loading of BMRST Antenna in C-17 Aircraft

Transporting the system over improved roadways presents little to no problems, however, travel over less than optimum roads is a challenge. During QRLV-1 initial transport from the Kodiak, AK Coast Guard Air Station to the Alaskan Spaceport launch head travel over a very rough, curvy, gravel road presented some damage to the antenna systems. The trip was approximately 30 miles one way and took approximately 3 hours. All of the operational problems were fixed on-site prior to the QRLV launch. Other non-critical problems had to be worked around for transport on the return trip to the airfield. Having an experienced Combat Communications Squadron transport, operate and maintain the BMRST during the QRLV deployment helped resolve issues and helped ensured mission success. Total deployment in Kodiak, AK was 4 weeks and was slightly longer than would be required for a comparable mission in the future. The length of the QRLV deployment was due in part to the "unknown" when dealing with an un-fielded system. For an "operational" deployment the goal will be to reduce the time on station in half.

IV. BMRST ACCEPTANCE/ACCEPTANCE BY THE EASTERN RANGE

A. History

Previously, certification of range systems at the Eastern Range was linked to a formal systems operational acceptance process, which was conducted in conjunction with a Systems Operational Acceptance Board (SOAB) chaired by the 45th Logistics Group (45 LG) commander. The process was guided by the 45th Space Wing Instruction 99-102 (since rescinded) and resulted in systems being certified at one of three possible levels: Full Operational Certification (FOC), Interim Operational Certification (IOC), and Temporary Operational Certification (TOC). The system certification level was formally captured in a document known as a Systems Operational Acceptance Notice (SOAN). FOC was awarded to systems that had met all operational requirements and were ready for operational use without any restrictions. IOC was used if the critical requirements were met and the remaining requirements did not preclude the system from fulfilling its operational mission. TOC, which had a limited time period, was awarded to systems still in an engineering development stage, but whose support was required for a specific mission.

B. A New Way of Operational Acceptance

The formal SOAB certification process has since been replaced at the ER with an operational acceptance process that is conducted by the ER range technical services (RTS) contractor. Operational acceptance of a system is now captured in an acceptance decision memorandum

(ADM), instead of the previously used government SOAN. The shift of mission success responsibility from the government to the RTS contractor drove the move from government ER instrumentation certification to RTS contractor instrumentation acceptance. Although the requirements for operational acceptance are similar to the former certification requirements, the responsibility for mission performance of the range instrumentation systems now rests with the RTS contractor. The operational acceptance process is contained in the ER acceptance management plan (AMP), Revision 4, dated 1 May 2000.

C. BMRST Acceptance Challenge

Operational acceptance of the BMRST System at the ER represents a unique challenge in that development of the system did not stem from a validated ER requirement. Under normal circumstances, systems operationally accepted at the ER stem from a requirements statement that was developed in response to a launch support requirement not being met by the ER. Because the BMRST System was developed by AFRL and FLANG as a technology demonstration program, there is technically no ER requirement for the system, making it difficult to fit acceptance of the BMRST System into an established process at the ER.

Due to the demonstrated capabilities of the BMRST System, interest has been raised at the ER for using the system in various support roles. These roles include its use as a mobile command transmit site or a mobile telemetry site to satisfy either range safety or customer requirements.

Subsequent discussions with the ER have lead to a new and novel approach of the ER "endorsing" the BMRST System. While this endorsement is short of operational acceptance and the ER operations and management responsibilities that come with it, it would still result in the appropriate ER agencies (Range Safety, the RTS Contractor's Systems Analysis branch, and the 45 LG) placing the system under scrutiny similar to that used for the operational acceptance process.

The operational acceptance review criteria can be broadly lumped into two major categories: effectiveness evaluation and suitability evaluation. Effectiveness focuses on the ability of the system to satisfy technical requirements, while suitability focuses on the usability or "ease of use" of the system.

Key effectiveness requirements would include: all functional requirements verified, key algorithms verified through analysis or test, system end-to-end effectiveness verified in a back-up or "shadow" mode, and all external interfaces verified. All deficiencies must be categorized

in accordance with MIL-STD-498, and all Category 1 and 2 deficiencies must be corrected prior to acceptance.

Key suitability requirements include: configuration management of hardware and software that is in place and changes or modifications are clearly documented, initial training is complete, spares are identified and available, operational procedures are complete and in place, and operations personnel are able to generate mission support files and sustain the system without developer assistance.

While the BMRST System will most likely not undergo the exact operational acceptance process that an ER system would, the challenge lies in ensuring the development and test program of the "fast-track" BMRST technology demonstration program is rigorous enough and appropriately structured to be evaluated under the operational acceptance process and receive the desired "endorsement" from the ER. It will be incumbent upon the BMRST team to structure the remainder of the program in a manner that fulfills operational spacelift acceptance criteria.

V. FAA "LICENSING" OF THE BMRST

A. FAA Actions for Range Safety Systems

Established in 1984 as the Office of Commercial Space Transportation (OCST) in the Department of Transportation, then transferred to FAA in 1995, the now called AST (Associate Administrator for Commercial Space Transportation) is the only space-related line of business within the FAA [6]. Its duties encompass:

- the regulation of the commercial space transportation industry,
- to protect the public health and safety, safety of property,
- to encourage, facilitate, and promote commercial space by the private sector,
- recommend appropriate changes in federal statutes, treaties, regulations, policies, plans, and procedures, and to
- facilitate the strengthening and expansion of the United States space transportation infrastructure.

One point the FAA AST office will adamantly state is that they do not certify anything. The word certification, and acceptance has historically been used by military test ranges and is not within the realm of FAA actions. How the FAA AST office does recognize the range safety function of systems is by its ability to:

1. baseline,
2. license, or
3. approve

a system for use. Historically, the EWR 127-1 [2] has been the benchmark not only for range safety systems on the EWRs, but has also been applied to other systems remote from the EWRs. To date, the FAA AST office has largely taken the approach that if the Eastern or Western Range has certified/accepted a system for use, then in most cases, it meets the FAA requirements. Figure 6 illustrates the current list of "officially recognized" launch sites the FAA AST has or is considering for a baseline, license, or approval for the respective range safety system [7]. Since the BMRST is a deployable, mobile range safety system that will interface with the host launch site, it is a challenge to place the BMRST on this map. One could argue that it is nowhere on this map because it doesn't belong to any particular launch site, which is true at this time. Conversely, one could argue that it could be everywhere on this map because it can be deployed to augment, become part of, or replace the range safety system at the respective launch site.

This structure of providing a mobile range safety system (personnel to operate and maintain the equipment), that could conceivably be operated anywhere in the world, has produced a unique challenge to the acceptance/licensing authorities. In particular, in June 2000, FLANG officially requested support of the FAA in obtaining the necessary FAA approvals to support both federal and non-federal customers throughout the United States [8]. Specifically, FLANG requested legal interpretation for the operation and maintenance of the BMRST in its support to federal and non-federal customers throughout the United States, and the specific type of "approvals" (i.e., base lining, approval, etc.) the FAA will grant the FLANG in its operation of the BMRST. The unique mobility and application at one or various launch sites has produced a challenge to the FAA in terms of how to categorize the BMRST and decide which approval actions to take to ensure that when and if the BMRST takes on range safety functions, it can do so to ensure to public safety. These options will be discussed in the following paragraphs. Additionally, the FLANG is currently establishing an official concept of employment that will help formalize how the BMRST will be deployed and interface with the host launch site and the launch vehicle provider.

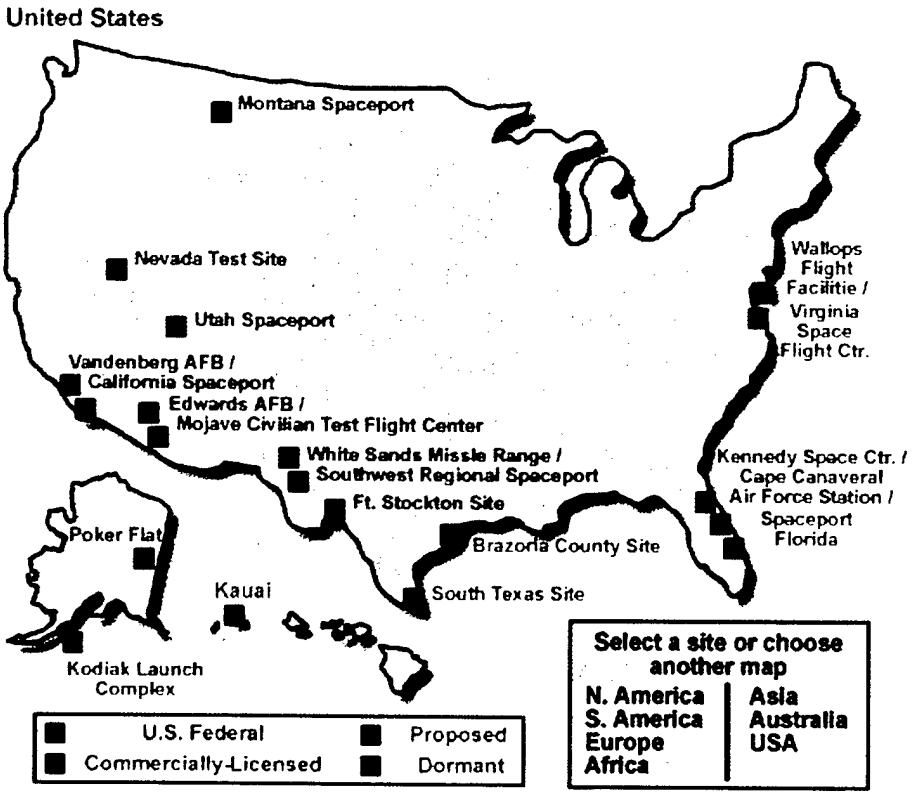

Figure 6. FAA Recognized Launch Sites

B. Baseline Acceptance

The FAA AST has historically baselined federal launch sites that have followed the integrity of EWR 127-1. This baseline, in essence, endorses the ranges safety capabilities, within a predefined operating envelope, for commercial customers (non-federal). These baselines have been established in the form of launch site safety assessments and have been completed for the 45th Space Wing/Patrick Air Force Base, 30th Space Wing/Vandenberg Air Force Base, Goddard Space Flight Center/Wallops Flight Facility, as well as more limited baseline assessments of the White Sands, Kwajalein, and Kawai Federal Launch Sites.

The FAA AST is likely to choose to baseline the BMRST despite its mobile aspects and its lack of permanent ties to a particular launch site, since the BMRST will be operated by the FLANG in a Title 10 (federal) mode. This baseline will encompass a certain envelope of the BMRST capabilities that have been demonstrated to ensure public safety. This demonstration will likely be judged against the new FAA Notice of Proposed Rulemaking (NPRM) [9] as well as the EWR 127-1. The more active roll the ER takes in the acceptance and/or endorsement of the BMRST,

the easier it will be for the FAA AST to baseline the BMRST as a mobile federal range safety system that could be used for commercial space launches.

C. Licensing

The FAA AST licensing of non-federal oriented launch activities can generally be grouped in two forms:

1) Launch License, and
2) Launch Site License.

Currently there are a total of ten launch licenses issued. This type of licensing is very site and vehicle specific and issued to a commercial contractor for the purpose of conducting commercial launches. The licensee can conduct many launches from the one site as long as the launch parameters of the approved launch vehicle are not exceeded. A launch license can further be categorized into a launch-operators license, which lasts for five years after issuance and may have a larger envelope of parameters than a launch-specific license, which will terminate when the specific mission has been completed or license has expired. Two examples of this are: the license issued to Orbital Sciences Corporation of the Taurus, from Vandenburg AFB (VAFB), which is valid from April 27, 2000 to April 27, 2005 (LLO 00-051), and a license issued to McDonald Douglas Corporation for the Delta 2 from VAFB, which is valid from 3 January 2000 to 3 January 2004, (LLO 99-048) [10]. This type of FAA AST licensing for the BMRST is unlikely at this time, but could happen in the future if a BMRST System was procured by a commercial provider and put into place as its range safety system for commercial space launches.

Currently the FAA AST has issued four Launch Site Licenses. This type of licensing has been geared towards commercial /state sponsored entities that are non-federal and have some commercial and state partnership. The Launch Site License approves the licensee to conduct launches from one site within a range of operating parameters to include launch vehicle families, launch parameters, and launch payloads. This type of launch license expires five years after it has been issued. Two examples of this type of license are: the Alaska Aerospace Development Corporation, Kodiak Island, LSO 97-004, 24 September 1998 to 24 September 2003; and License LSO 96-001 issued to Spaceport Systems International/ California Spaceport VAFB from 19 September 1996 to 19 September 2001. The development of various space ports throughout the United States is relatively new as compared to the historical development of space launches at federal ranges. These "State" space ports are generally less developed than their federal counterparts. A good example of this is the Alaskan Spaceport that has no

permanent range safety system. Although the Alaskan Spaceport does not have a permanent BMRST System, the BMRST System was an active participate in the QRLV-1 launch that occurred in March 2001 from the Kodiak Spaceport. This was the first deployment of the BMRST System and demonstrated the utility of the BMRST to be deployed to remote locations for range safety applications. If a BMRST System was integrated into the Alaskan Spaceport infrastructure and used as the range safety system, the current license could eventually be modified to include the BMRST operations as its range safety system.

D. Safety Approval

Recently the FAA AST has received new legislative authority to provide safety approval of range safety systems. This new approval authority has not been used to date. It is unclear at this time if the FAA AST would utilize its new approval authority for the BMRST.

VI. BMRST ACCEPTANCE/BASELINE PLAN

After the BMRST was delivered to the FLANG, a formal test program was initiated as outlined in the BMRST Program Introduction [3]. This test program was intended to ensure the system would be capable of data collection of the QRLV launch in Kodiak, AK in March 2001 and to collect valuable data that could be used in the acceptance/licensing process. The tests that are outlined in the BMRST Program Introduction are:

1. Satellite Track Testing,
2. Aircraft Operation Ground (AOG) Tests,
3. Launch Shadow Tests,
4. BMRST Command System Testing,
5. Launch Vehicle Demonstration, and
6. Launch Vehicle Acceptance (3).

A. Satellite Track Testing

Numerous tests have been conducted to verify the ability of the BMRST ground system to track a dynamic object on a fixed trajectory by acquiring the S-band transmission link of the object. In this case, opportunistic passes of orbital satellites were used. The vehicle was operating in a passive mode. No RF transmission occurred. In addition, the BMRST command destruct transmitter was disabled prior to these tests. These tests were successful.

B. Aircraft Operational Ground (AOG) Tests

The GPS Range Safety Project team concluded a flight test effort from 21-27 January 2001, staged out of Patrick Air Force Base over Cape Canaveral Air Force Station, Florida. The BMRST airborne segment was installed in the Ohio University King Air C90 and flown against the BMRST ground station in accordance with the Aircraft Flight Test Plan [11]. A passive GPS antenna provided GPS data to the airborne BMRST unit as well as a kinematics DGPS truth reference system. S-band telemetry data was transmitted from the BMRST airborne unit using a small S-band blade antenna mounted on the bottom of the King Air C90 aircraft.

The ground system was configured to acquire and track the GITU downlink. During these tests the following capabilities were demonstrated, the:

- capability to acquire the downlink from program track mode in real time,
- capability to transition from program track, to acquisition, to autotrack mode in real time,
- decommutation and display of GITU downlink data,
- display of flight vehicle position tracks on the IIP displays,
- acquisition aid capability in real-time, and
- demonstrate the capability to acquire from search mode in real time.

These test results were documented in reference [12], and were part of the overall test program to ensure the system's performance for the Kodiak, AK launch scheduled for 23 March 2001. Approximately twelve hours of data were collected and analyzed with the King Air aircraft.

C. Launch Shadow Test

This test has not been conducted as of August 2001 but will provide an additional opportunity to demonstrate the capability of the ground system to track a launch vehicle and the dynamics associated with launch vehicle trajectories. The scope of this test will be limited to tracking of the downlink S-band telemetry stream on Delta II, Atlas II/III, Titan IV, Shuttle from the Eastern Range. This test will be done on a non-interference passive mode; that is, there is no GITU flight system installed on the vehicle and the command destruct will be disabled. The BMRST System will be in receive-only mode and will not interfere whatsoever, with any launch vehicle activities. This test will demonstrate the:

- capability to acquire the launch vehicle TMIG downlink in real time,
- capability to enter a program track mode and then auto track mode on the LV TMIG stream in real time,

- ability to acquire bit and frame sync and then decommutate and display parameters from the LV TMIG stream in real time,
- and display of flight vehicle position tracks on the IIP displays.

Support requirements consist of post flight delivery of the Best Estimate Trajectory (BET), as well as individual radar derived present position and IIP data, or connection to an ER radar data source during the launch to allow real time capture, storage, and comparison. In addition, the BMRST program will require a set-up location that will allow the system to have line-of-sight of any launch vehicle being shadowed. The space must be adequate size so that the tracking antennas can be located approximately 100 feet from the MOC. Also, the following support will be required at the set up location(s):

- ground power (preferable),
- telephone lines,
- source of ER radar data: IRIG 161-0A,
- ER launch vehicle telemetry data specifications and format interface to receive timing data from the ER,
- portable restroom facilities (or access to nearby facilities, if available).

The following pre-flight support will be required:

- theoretical trajectory (will use available format),
- vehicle technical description (stage makeup, e.g. solid vs. liquid, mission time-line, etc.),
- telemetry format definition,
- telemetry tape (VHS Metrum RSR-512 format or ability to bring the BMRST Metrum Recorder to a vehicle telemetry facility to make a copy of the vehicle telemetry stream, and vehicle antenna system characteristics.

D. BMRST Command System Testing

Tests consisting of tracking a test aircraft containing secure and non-secure command receivers, is also planned but has not been conducted as of August 2001. The various commands (TEST, ARM, DESTRUCT) will be radiated by the BMRST and the proper receipt and activation by the airborne receivers shall be verified. Commands will also be radiated in the direction of the Cape Command Site for proper message parameter verifications. Omni and directional antenna tests shall be performed. The following ER resources are required to certify the BMRST Command Destruct System:

- frequency clearance,
- aircraft support (same as for aircraft tracking test),
- central command support,

- Range Safety Transmitter Verification test set (secure mode command receiver/decoder (CRD) portion of the range safety verification test set is to be installed in the test aircraft),
- test codes matching the test codes of the Range Safety Transmitter Verification test set CRD.

Automated Command Message Evaluation (ACME) Unit located at the Cape Command Site.

E. Launch Vehicle Testing

On 22 March 2001 the U.S. Navy launched a QRLV from the Kodiak, Alaska Spaceport. One of the three experiments on-board was the AFRL BMRST System. The BMRST MOC was sited approximately 1.5 miles away from the launch head. The QRLV launch vehicle took off at 2:15 pm and traveled 383 miles down range, attained a maximum altitude of 99 miles and had a flight time of 7 min 4 sec (7:04). The BMRST System performance [13] can be summarized as:

- 100% GITU data captured,
- GPS received an average of 11 satellites,
- GITU demonstrated in a launch environment,
- no exhaust plume interference,
- no data drop-outs from vehicle lift-off through 6:56, where the launch vehicle was over the horizon,
- 3-D position errors less than 14 m, and
- 3-D velocity errors less than 1.0 m/s.

F. Acceptance Flights

The current BMRST Program plans are for three acceptance flights that can be used for ER acceptance and the FAA AST baseline of the BMRST System. The first of these "official" acceptance flights is currently planned to be the QRLV-2 launch from the Alaskan Spaceport in April 2002. A BMRST airborne component (i.e., GITU) will be installed on-board the launch vehicle. The BMRST MOC is expected to be sited in the same location as it was for the QRLV-1 launch that occurred in March 2001. Acceptance flights #2 and #3 will follow.

VII. SUMMARY AND CONCLUSIONS

The development and demonstration of a "certifiable" mobile launch range tracking and control system, based on the GPS that can support military and commercial space launch vehicles for range safety applications, has produced challenges in the acceptance/licensing process. The

uniqueness of design and operation results in challenges for the acceptance/licensing process for both the Air Force ER as well as the FAA AST. This paper describes the overall BMRST acceptance/licensing program including Satellite Track Testing, Aircraft Operation Ground Tests, Launch Shadow Tests, BMRST Command System Testing, Launch Vehicle Demonstration, and Launch Vehicle Acceptance Flights. The road to acceptance of the BMRST System will likely take on the form of an endorsement by the ER with full acceptance of the BMRST System by ER anticipated in the future. A baseline assessment by the FAA AST is most likely, given the fact that the BMRST will be operated and maintained by the FLANG under Title 10 (federal), when it will support commercial space launches from federal or non-federal ranges. The acceptance and baseline of the BMRST will provide a new mobile range safety capability to launch providers as has never been offered before.

VIII. REFERENCES

Slivinsky, S., et.al., "Missile Technology Demonstration 3 (MTD-3) Flight Pretest Predictions", AIAA-98-5299.

Eastern Western Range 127-1, 31 October 1977.

Ballistic Missile Range Safety Technology Program, DOC TYPE/NO.: PROGRAM INTRODUCTION REVISION: 0, 01 Oct 2000, Florida Air National Guard.

Rice, B., "Tracking & Uplink Antenna Subsystem", BMRST Critical Design Review, Honeywell, International, June 6-7, 2000.

DOD-STD-2167A, Military Standard Defense System Software Development, 29 February 1988.

FAA AST Licensing Information, http://ast.faa.gov/, visited May 2, 2001.

FAA "Officially Recognized" Launch Sites, http://ast.faa.gov/veh_site/maps/, visited May 2, 2001.

FAA Letter, from FLANG to FAA AST, June 2000

Commercial Space Transportation Licensing, "Notice of Proposed Rulemaking, Licensing and Safety Requirements for Launch: 14 CFR Pars 413, 415, and 417", October 25, 2000.

FAA AST Launch Licenses Issued, http://ast.faa.gov/licensing/lic_issued/lic_issu.cfm, visited May 24, 2001.

BALLISTIC MISSILE RANGE SAFETY TECHNOLOGY (BMRST), Aircraft Flight Test Plan, OPNR F8680, Cape Canaveral Air Force Station (CCAFS), 18 January 2001.

Bartone, C. G., et al, "Aircraft Flight Evaluation of a Ballistic Missile Range Safety Technology (BMRST) System", Institute of Navigation Annual Meeting, Albuquerque, NM, June 11-13, 2001.

Nesbit, C., et al, Development of the GPS-Based Ballistic Missile Range Safety Technology (BMRST) System, Institute of Navigation Annual Meeting, Albuquerque, NM, June 11-13, 2001.

DISTRIBUTION LIST

DTIC/OCP 8725 John J. Kingman Rd, Suite 0944 Ft Belvoir, VA 22060-6218	1 cy
AFRL/VSIL Kirtland AFB, NM 87117-5776	2 cys
AFRL/VSIH Kirtland AFB, NM 87117-5776	1 cy
Official Record Copy AFRL/VSEB/Sandra Slivinsky	1cy