ERDC TR-00-5

Engineer Research and Development Center

US Army Corps of Engineers®
Engineer Research and Development Center

Analysis of Explosives-Related Chemical Signatures in Soil Samples Collected Near Buried Land Mines

Thomas F. Jenkins, Marianne E. Walsh, Paul H. Miyares, Jessica A. Kopczynski, Thomas A. Ranney, Vivian George, Judith C. Pennington, and Thomas E. Berry, Jr.

August 2000

Approved for public release; distribution unlimited.

DTIC QUALITY INSPECTED 4

20000920 121

Abstract: Over 1000 soil samples were collected at the surface and at depth near buried TMA-5, TMM-1, PMA-1A, PMA-2, and Type 72 land mines at a research minefield at Fort Leonard Wood, Missouri, in 1998 and 1999. Soil samples were extracted with acetonitrile and analyzed by GC-ECD for nitroaromatic, nitramine, and aminonitroaromatic compounds to determine the concentrations of explosives-related chemical (ERC) signatures that collect in soil near buried land mines. The most often detected of 20 different ERC compounds were 2,4-dinitrotoluene (2,4-DNT), 2,4,6-trinitrotoluene (2,4,6-TNT), and two environmental transformation products of 2,4,6-TNT: 2-amino-4,6-dinitrotoluene (2-ADNT) and 4-amino-2,6-dinitrotoluene (4-ADNT). Generally, in surface soils, either 2-ADNT, 4-ADNT, or 2,4-DNT were the ERCs most often detected and were present at the highest concentrations. ERCs were much more prevalent near TMA-5 and PMA-1A land mines than TMM-1 and PMA-2 mines. ERCs were spatially heterogeneous in soil, but were found most often in a discontinuous cylinder around the perimeters of the mines, under the mines, and in a discontinuous halo in the surface soil. It appears that the frequency of detection of ERCs in soil near the TMA-5 and PMA-1A mines is continuing to increase with time. Soil/air partition coefficients, estimated for ERC analytes using explosives-contaminated soil from the research minefield, and the median values for these compounds, estimated in the surface soils, were used to predict the concentrations of ERCs in the boundary layer air above buried TMA-5 and PMA-1A mines. 2,4-DNT and the two isomers of ADNT give the greatest promise for success in chemically detecting buried mines.

How to get copies of CRREL technical publications:

Department of Defense personnel and contractors may order reports through the Defense Technical Information Center:

DTIC-BR SUITE 0944
8725 JOHN J KINGMAN RD
FT BELVOIR VA 22060-6218
Telephone (800) 225-3842
E-mail help@dtic.mil
msorders@dtic.mil
WWW http://www.dtic.mil/

All others may order reports through the National Technical Information Service:

NTIS
5285 PORT ROYAL RD
SPRINGFIELD VA 22161
Telephone (703) 487-4650
(703) 487-4639 (TDD for the hearing-impaired)
E-mail orders@ntis.fedworld.gov
WWW http://www.ntis.gov/index.html

A complete list of all CRREL technical publications is available from

USACRREL (CEERD-IM-HL)
72 LYME RD
HANOVER NH 03755-1290
Telephone (603) 646-4338
E-mail erhoff@crrel.usace.army.mil

For information on all aspects of the Cold Regions Research and Engineering Laboratory, visit our World Wide Web site:

http://www.crrel.usace.army.mil

Technical Report
ERDC TR-00-5

US Army Corps of Engineers®
Cold Regions Research & Engineering Laboratory

Analysis of Explosives-Related Chemical Signatures in Soil Samples Collected Near Buried Land Mines

Thomas F. Jenkins, Marianne E. Walsh, Paul H. Miyares, Jessica A. Kopczynski, Thomas A. Ranney, Vivian George, Judith C. Pennington, and Thomas E. Berry, Jr.

August 2000

Prepared for
DEFENSE ADVANCED RESEARCH PROJECTS AGENCY

Approved for public release; distribution is unlimited.

PREFACE

This report was prepared by Dr. Thomas F. Jenkins, Research Chemist, Marianne E. Walsh, Chemical Engineer, Jessica Kopczynski, Technician, Geological Sciences Division, and Dr. Paul H. Miyares, Research Chemist, Geochemical Sciences Division, U.S. Army Engineer Research and Development Center, Cold Regions Research and Engineering Laboratory, Hanover, New Hampshire; Thomas A. Ranney, Staff Scientist, Science and Technology Corporation, Hanover, New Hampshire; Vivian George, Staff Scientist, Draper Laboratory, Fort Belvoir, Virginia; Dr. Judith C. Pennington and Thomas E. Berry Jr., U.S. Army Engineer Research and Development Center, Environmental Laboratory, Vicksburg, Mississippi.

The authors gratefully acknowledge funding for this work provided by the Defense Advanced Research Projects Agency, Dr. Regina Dugan, Program Manager of the Dog's Nose Research Program. Technical reviews were provided by Dr. C.L. Grant, Professor Emeritus, University of New Hampshire, and Alan Hewitt, U.S. Army Engineer Research and Development Center, Cold Regions Research and Engineering Laboratory. The authors thank Charlotte Hayes and Glenn Myrick, AScI Corporation, Vicksburg, Mississippi, and Bob Helgesen from Sandia National Laboratories, Albuquerque, New Mexico, for assistance in the collection of soil samples at the Fort Leonard Wood Research Minefield, and Ms. Hayes and Sally L. Yost of AScI for the determination of soil characteristics, including soil–water partition coefficients. The authors also acknowledge the assistance of the following individuals in conducting soil analyses at the CRREL laboratory: Nancy Perron, Snow and Ice Division, and Philip Thorne, Geological Sciences Division.

The contents of this report are not to be used for advertising or promotional purposes. Citation of brand names does not constitute an official endorsement or approval of the use of such commercial products.

CONTENTS

Preface ii
Abbreviations iv
Introduction 1
- Background 1
- Detection of land mines using chemical signatures 1
- Objective 5

Materials and methods 5
- Initial characterization of the soils at the DARPA Electronic Nose Testing Facility, Fort Leonard Wood, Missouri 5
- Land mine burial 5
- Background characterization of soils at the DARPA Electronic Nose Testing Facility 6
- Soil sampling for characterization of explosives-related chemical signatures 8
- Soil sample collection during August and November 1998 8
- Soil sample collection during April, July, and November 1999 9
- Soil sample transport and storage 9
- Soil extraction 9
- Gas chromatography-electron capture (GC-ECD) determination 10
- RP-HPLC-UV determination 11
- Sampling to estimate mine surface contamination on land mines that had been buried for over 1 year 11
- Analysis of soil and soil headspace vapor to estimate soil–air partition coefficients 12

Results and discussion 12
- Physical soil characterization 12
- Soil samples collected in August 1998 for characterization of land-mine-related chemical signatures 13
- Soil samples collected in November 1998 16
- Soil samples collected in April 1999 18
- Soil samples collected in July 1999 21
- Soil samples collected in November 1999 24
- Detection frequency for major signature chemicals in soils near TMA-5 and PMA-1A mines as a function of time after burial 27
- Remaining surface contamination levels on buried mines 30
- Soil–air partition coefficients for soils collected at the Fort Leonard Wood research minefield 32

Conclusions and implications for chemical detection of land mines 34
Literature cited 36
Appendix A: Analytical results for soil samples collected at the Fort Leonard Wood research minefield, August 1998 39
Appendix B: Analytical results for soil samples collected at the Fort Leonard Wood research minefield, November 1998 43
Appendix C: Analytical results for soil samples collected at the Fort Leonard Wood research minefield, April 1999 55
Appendix D: Analytical results for soil samples collected at the Fort Leonard Wood research minefield, July 1999 65
Appendix E: Analytical results for soil samples collected at the Fort Leonard Wood research minefield, November 1999 75
Abstract 86

ILLUSTRATIONS

Figure

1. Land mines 6
2. Location of soil samples for physical characterization at Fort Leonard Wood, Missouri 7
3. Locations of various ERCs detected in surface soil near buried TMA-5 land mine EX-265 in August 1998 15
4. Locations of various ERCs detected in surface soil near buried TMA-5 land mine EX-268 in November 1998 17
5. Locations of various ERCs detected in surface soil near buried TMA-5 land mines in April 1999 19
6. Locations of various ERCs detected in surface soil near buried PMA-1A land mines in April 1999 20
7. Locations of various ERCs detected in surface soil near buried TMA-5 land mines in July 1999 22
8. Locations of various ERCs detected in surface soil near buried PMA-1A land mines in July 1999 23
9. Locations of various ERCs detected in surface soil near buried TMA-5 land mines in November 1999 25
10. Locations of various ERCs detected in surface soil near buried PMA-1A land mine EX-048 in November 1999 26
11. Detection frequency for ERCs in soil samples collected near buried TMA-5 land mines 27
12. Detection frequency for ERCs in soil samples collected near buried PMA-1A land mines 29

TABLES

Table

1. Equilibrium headspace concentrations above military-grade TNTs at 22°C 2
2. Concentrations of ERC components on land mine surfaces 2
3. Mean flux into air for 1,3-DNB, 2,4-DNT, and 2,4,6-TNT from PMA-1A, PMA-2, TMA-5, and TMM-1 land mines 3
4. Analytes most commonly detected in soils collected from an experimental mine field at Fort Leonard Wood, 2 months after the mines were buried 4

5. Mean concentrations of compounds spiked into Fort Leonard Wood soil and incubated at room temperature 5
6. Specifications of the land mines buried at the Fort Leonard Wood research minefield 5
7. Field sampling dates at Fort Leonard Wood research minefield 8
8. Depths to which soil was collected for each type of land mine during the August and November 1998 sampling events at the Fort Leonard Wood research minefield 9
9. Depths to which soil was collected for each type of land mine for samples collected in April, July, and November 1999 at the Fort Leonard Wood research minefield 9
10. Retention times on analytical and confirmation columns 10
11. Method detection limits of nitroaromatics and nitramines in soil determined by GC-ECD 11
12. RP-HPLC retention times for land mine signature compounds present in high concentration 11
13. Characteristics of first set of Fort Leonard Wood soils 13
14. Particle size distribution in first set of Fort Leonard Wood soils 13
15. Soil–water partition coefficients and linear regression coefficients for Fort Leonard Wood soils 14
16. Frequency of detection of ERCs in soil samples collected near buried mines in August 1998 14
17. Frequency of detection of ERCs in soil samples collected near buried mines in November 1998 17
18. Frequency of detection of ERCs in soil samples collected near buried mines in April 1999 18
19. Frequency of detection of ERCs in soil samples collected near buried mines in July 1999 21
20. Frequency of detection of ERCs in soil samples collected near buried mines in November 1999 24
21. Concentration of analytes found on mine surfaces after being buried for periods up to 472 days 31
22. Partition coefficients for selected Fort Leonard Wood soils removed from under and around buried mines in April and November 1999 33
23. Example of concentrations of ERCs in soil as function of depth 35
24. Statistical analysis of analytical results from surface soils collected near mines in August 1998 and April, July, November 1999 35
25. Estimation of boundary layer signature concentrations computed using surface soil concentrations and soil–air partition coefficients above land mines 36

ABBREVIATIONS

ACN	Acetonitrile
ADNTs	Aminodinitrotoluenes
2-ADNT	2-amino-4,6-dinitrotoluene
4-ADNT	4-amino-2,6-dinitrotoluene
2-ANT	2-amino-4-nitrotoluene
4-ANT	4-amino-2-nitrotoluene
CRREL	Cold Regions Research and Engineering Laboratory
DARPA	Defense Advanced Research Projects Agency
3,5-DNA	3,5-dinitroaniline
1,3-DNB	1,3-dinitrobenzene
2,4-DNT	2,4-dinitrotoluene
EL	Environmental Laboratory
ERC	Explosives-related chemical (TNT, DNT, DNB, ADNTS, TNB)
ERDC	Engineer Research and Development Center
GC-ECD	Gas chromatography-electron capture detection
HMX	1,3,5,7-octahydro-1,3,5,7-tetranitrotetrazocine
3-NA	3-nitroaniline
PMA-1A	Plastic-cased Yugoslavian antipersonnel land mine
PMA-2	Plastic-cased Yugoslavian antipersonnel land mine
QR	Quadrapole resonance
RDX	1,3,5-hexahydro-1,3,5-trinitro-1,3,5-triazine
RP-HPLC-UV	Reversed-phase high performance liquid chromatography with ultraviolet detection
SARM	Standard analytical reference materials
SPME	Solid phase microextraction
TKN	Total Kjeldahl nitrogen
TMA-5	Plastic-cased Yugoslavian antitank land mine
TMM-1	Metal-cased Yugoslavian antitank land mine
TNB	1,3,5-trinitrobenzene
TNT	Trinitrotoluene
2,4,6-TNT	2,4,6-trinitrotoluene
TOC	Total organic carbon
Type 72	Plastic-cased Chinese antitank land mine

Analysis of Explosives-Related Chemical Signatures in Soil Samples Collected Near Buried Land Mines

THOMAS F. JENKINS, MARIANNE E. WALSH, PAUL H. MIYARES,
JESSICA A. KOPCZYNSKI, THOMAS A. RANNEY, VIVIAN GEORGE,
JUDITH C. PENNINGTON, AND THOMAS E. BERRY, JR.

INTRODUCTION

Background

Even after many years of research, land mine detection remains one of the U.S. Army's most intractable problems. The introduction of land mines manufactured using plastic casings, with few or no metal parts, has made detecting buried mines using electromagnetic induction (metal detection) very time consuming, as all small metal debris must be removed during demining. Other techniques, such as ground penetrating radar, can sometimes detect buried mines, but discriminating between mines and other buried objects has been difficult, resulting in false positive rates that are unacceptable for countermine operations, particularly for anti-personnel land mines.

The worldwide effect of buried mines continues to be enormous. The United Nations estimates that 120 million mines are buried in 70 countries and the rate of installation of new mines far exceeds the rate of removal of old ones (Yinon 1999). It is estimated that about 24,000 people are killed or injured by land mines each year, sometimes by mines buried as far back as the Second World War.

Detection of land mines using chemical signatures

A technique that is currently being investigated is detecting buried land mines by sensing the presence of the explosives that are their lethal ingredient. Two possible techniques are being examined. The first is the detection of the bulk explosives using methods such as quadrapole resonance (QR). The QR approach exploits the interaction of the quadrupole moment of ^{14}N (a prevalent element of all common military secondary explosives) with the electric field gradient of the crystal's electron cloud in the vicinity of the ^{14}N nucleus. The quadrupole resonance frequency is critically dependent on the axially symmetrical electric field gradient and the nuclear charge distribution's deviation from spherical symmetry. These two parameters are essentially unique to a substance (TNT, RDX, Tetryl, etc.), and there are essentially no known interferences with the same resonant frequency. Recent tests demonstrated the lack of significant false alarms, with arguably the best performance against RDX-containing land mines, since the inception of countermine programs 50 years ago. Results against TNT-containing targets are equally optimistic, but it is understood that the TNT system requires substantial engineering. All of these results were obtained from a hand-held prototype. Efforts are currently underway to reengineer both a hand-held version (U.S. Marine Corps.) and a vehicle-mounted version (PM-MCD, Fort Belvoir).

The second chemical detection concept being investigated is finding explosives vapors evolving from buried land mines at the soil surface. To do this, it is important to understand the qualitative nature of the signatures given off by the explosives used in various types of land mines, the levels of surface contamination present on the mine at the time of burial, the flux of the various explosives-related chemical (ERC) signatures into the soil surrounding the mine, the stability of the various ERCs in the soil environment, the rate of transport through the soil to the surface, the concentrations of the various ERCs that accumulate at the soil surface, and the degree of partitioning that occurs between the soil and the overlying air. Research on all of these topics is being supported at ERDC (CRREL

to contents

Table 1. Equilibrium headspace concentrations (g/mL) above military-grade TNTs at 22°C. Vapors were sampled by solid phase microextraction (SPME) and determined by gas chromatography with an electron capture detector. (From George et al. 1999.)

Source	*1,3-DNB*	*2,4-DNT*	*1,3,5-TNB*	*2,4,6-TNT*
U.S. 1966	3.46×10^{-10}	5.51×10^{-10}	6.72×10^{-12}	6.97×10^{-11}
PMA-1A	4.59×10^{-9}	1.43×10^{-9}	8.05×10^{-12}	7.76×10^{-11}
PMA-2	9.74×10^{-10}	2.75×10^{-10}	8.57×10^{-13}	7.65×10^{-11}
TMA-5	9.61×10^{-11}	1.84×10^{-9}	4.30×10^{-12}	6.95×10^{-11}

and the Environmental Laboratory) and Sandia National Laboratories by the Defense Applied Research Agency (DARPA). While uptake of these signature chemicals by vegetation is known to occur, detection of these imbibed signatures in near real-time is thought to be much more difficult to engineer and, hence, we have devoted less effort toward characterizing this.

Our analysis of the current demining literature, distributed by the National Ground Intelligence Center, tells us that 85% of all land mines contain TNT. While military grade TNT generally contains about 99% of 2,4,6-trinitrotoluene (Murrmann et al. 1971), research has demonstrated that the most abundant ERC evolving from these military grade TNTs is often 2,4-dinitrotoluene (2,4-DNT) (Murrmann et al. 1971, Leggett et al. 1977). Other important components of the ERC are 1,3-dinitrobenzene (1,3-DNB), 1,3,5-trinitrobenzene (TNB), other geometric isomers of DNT and DNB, and 2,4,6-trinitrotoluene (2,4,6-TNT) (Jenkins et al. 1999). Ranney determined equilibrium concentrations of ERCs for three samples of military-grade TNT (Table 1).

These same components of military TNT have been detected on the exterior of a variety of U.S. and foreign land mines (Leggett et al. 2000). Mean surface concentrations of these chemicals on eight types of land mines are presented in Table 2. The level of 2,4,6-TNT is much greater on these mine surfaces than what is observed in the headspace vapor above military TNT. This is consistent with the analysis of the solid composition of TNT as compared to the vapor composition. The 2,4,6-TNT remains on the surface of the land mine, while the 2,4-DNT and 1,3-DNB are more volatile and do not persist in solid form on the surface of the mine to the same degree.

George et al. (1999) reported on the flux of 1,3-DNB, 2,4-DNT, and 2,4,6-TNT into air from PMA-1A, PMA-2, TMA-5, and TMM-1 land mines (Table 3). For the three plastic-cased mines (PMA-1A, TMA-5, and PMA-2), the flux of 2,4-DNT and 1,3-DNB is always much greater than that for 2,4,6-TNT. For the metal-cased TMM-1, the flux of 2,4,6-TNT is greater than that for 1,3-DNB and similar in magnitude, but less than, that for 2,4-DNT. As expected, increasing temperature causes a large increase in the flux for all four mine types (Leggett et al., in prep.).

The soil near buried mines probably becomes contaminated with ERCs by vapor flux (Table 3) into soil pore spaces and dissolution of contamination from mine surfaces into soil moisture. The former should be dominated by the air flux, such as shown in Table 3, while the later should be controlled more by the levels of sur-

Table 2. Concentrations of ERC components on land mine surfaces. (From Leggett et al. 2000.)

		Mean surface concentration (ng/cm²) ± relative standard deviation			
Mine	*Area (cm²)*	*1,3-DNB*	*2,4-DNT*	*2,4,6-TNT*	*RDX*
TMA-5	2720	3.1 ± 1.4	6.1 ± 3.9	83.9 ± 87.5	—
TMM-1	2240	7.3 ± 6.2	11.0 ± 6.5	13.2 ± 19.7	—
PMA-1A	345	9.0 ± 3.8	4.8 ± 2.6	5.0 ± 3.5	—
PMA-2	118	1.3 ± 0.9	0.95 ± 0.43	1.3 ± 0.5	1.2 ± 0.4
Type 72	1990	nd	1.4 ± 1.0	>17	73.7 ± 159
VS-50	254	nd	nd	0.81 ± 0.5	118 ± 237
TS-50	254	nd	nd	0.20 ± 0.1	273 ± 96
VS-2.2	1480	nd	1.3 ± 0.8	7.3 ± 3.9	3610 ± 2400

Table 3. Mean flux (ng/mine-day) into air for 1,3-DNB, 2,4-DNT, and 2,4,6-TNT from PMA-1A, PMA-2, TMA-5, and TMM-1 land mines at temperatures ranging from 3 to 34°C. (From George et al. 1999.)

Temp (°C)	*1,3-DNB*	*2,4-DNT*	*2,4,6-TNT*
PMA-1A			
3	1410	468	22.9
13	1950	741	75.9
22.5	4680	912	229
23	8710	3390	347
34	14100	6170	832
TMA-5			
3	437	1660	219
13	1510	6310	437
22.5	4680	20000	1660
23	6460	28800	1580
34	14500	67600	8710
PMA-2			
3	40.7	32.3	2.5
13	138	115	8.5
22.5	389	316	28.2
23	562	490	49.0
34	1820	1620	97.7
TMM-1			
3	40.7	182	105
13	129	724	302
22.5	380	2190	1050
23	398	2290	851
34	1150	7590	4570

face contamination (Table 2) in concert with the much higher flux rate into water (Leggett et al., in prep.). For mines that are not completely sealed, an additional mechanism may be direct dissolution of ERCs by water contacting the explosive.

Other than our work, only a few measurements of the concentrations of ERCs in soil near buried mines have been reported. Chambers et al. (1998) reported that concentrations of 2,4-DNT and 2,4,6-TNT ranged from 10 to 2700 µg/kg and 20 to 2000 µg/kg, respectively, in soils taken near a TMA-4 mine, 150 days after burial. Desilets et al. (1998) reported that the concentration of 2,4,6-TNT was about 0.008 µg/kg in soil 10 months (300 days) after burial of a TMA-4 land mine. Walsh and Ranney (1999), during the development of a low-level method for determining explosives residues in soil, reported concentrations of land-mine-derived signatures in 23% of the soil samples collected near TMA-5, PMA-1A, and PMA-2 mines, two months (48 days) after burial (Table 4). These results demonstrated that land-mine-derived analytes were detectable in the soil near PMA-1A and TMA-5 mines two months after burial. Importantly, 2,4-DNT, 2,4,6-TNT, and 1,3-DNB were detected in soil taken from the surface above these two types of land mines. Additionally, Walsh and Ranney (1999) reported the presence of 2-amino-4,6-dinitrotoluene (2ADNT) and 4-amino-2,6-dinitrotoluene (4ADNT) in these surface soils; these compounds are environmental transformation products of 2,4,6-TNT (McCormick et al. 1976).

That amino transformation products are present in the soil shows us the importance of understanding the stability of land-mine-derived signature chemicals in soil. The stability issue has been studied by Maskarinec et al. (1991) and Grant et al. (1993, 1995). Both reported data on the stability of 2,4,6-TNT and 2,4-DNT in moist soil samples held at several temperatures for periods up to a year. Both studies report that 2,4-DNT is more stable in fortified soil than 2,4,6-TNT. The half-life for 2,4,6-TNT was less than 3 days for the six fortified soils at room temperature (about 22°C), three studied by Grant et al. (1993) and three by Maskarinec et al. (1991). But, half-lives increased to greater than 14 days for four of the six soils held at 4°C. When air-dried soils were fortified with 2,4,6-TNT and 2,4-DNT and held at 4°C for 62 days, however, there was no evidence of any loss of either analyte (Bauer et al. 1989). These results tell us how important soil moisture is for facilitating biotransformation of these analytes, presumably by microorganisms.

Recently, Miyares and Jenkins (in press) reported results of experiments where several components of ERCs (2,4,6-TNT, 2,4-DNT, 1,3-DNB, 2,6-DNT, and RDX) were spiked into moist soil from Fort Leonard Wood at concentrations of about 500 µg/kg and held at either 22, 4, or –4°C for periods up to 30 days (Table 5). The results indicated that the concentrations of 2,4,6-TNT and 1,3-DNB declined more rapidly than did the concentrations of 2,4- and 2,6-DNT. For 2,4,6-TNT, the concentration declined to about half of its initial value in only about a day (Table 5) when the soil was held at room temperature (22 ± 2°C). Under the same storage conditions, the concentration of 2,4-DNT had yet to be reduced to half its initial value even after 20 days of storage. These results were quite similar to those reported by Maskarinec et al. (1991) and Grant et al. (1993) for the six soils they studied.

The stability of residues in surface soils that were contaminated by nearby detonations of land mines (Phelan et al., in press) was recently investigated by Sandia National Laboratories. The results indicate that the rate of degradation depends on biochemical degradation rates, which in turn depend on temperature and moisture content.

Table 4. Analytes most commonly detected in soils collected from an experimental minefield at Fort Leonard Wood, 2 months after the mines were buried. The relative percent differences are shown in parentheses for replicate samples. (From Walsh and Ranney 1999.)*

Lab samp. no.	*Mine type*	*Depth†*	*Concentration (µg/kg)*					
			2,4-DNT	*2,4,6-TNT*	*2-Am-DNT*	*4-Am-DNT*	*1,3-DNB*	*2,6-DNT*
13	PMA-1A	X	12	1.2	8.1	8.9	4.7	<d
13 rep			16 (29%)†	1.3 (14%)	9.7 (18%)	11 (18%)	5.4 (14%)	<d
32	PMA-1A	S	<d	<d**	198	166	<d	<d
30	PMA-1A	T	77	1.5	314	317	32	1.1
29	PMA-1A	X	11	1.5	29	21	4.0	<d
29 rep			18 (50%)	<d	40 (31%)	37 (53%)	6.8 (52%)	<d
124	TMA-5	T2	2.3	<d	3.3	2.1	<d	<d
134	TMA-5	X	116	3.9	164	115	3.9	0.7
134 rep			96 (19%)	10 (87%)	127 (25%)	86 (30%)	4.8 (19%)	<d
200	TMA-5	S	3.9	<d	14.9	14.8	<d	<d
65	TMA-5	T1	108	16	469	229	7.2	1.9
69	TMA-5	T2	520	23	720	434	16	8.9
67	TMA-5	X	2966	3267	2089	1642	131	46
67 rep			3505 (17%)	4270 (27%)	2692 (25%)	2760 (51%)	205 (44%)	39 (15%)
202	TMA-5	S	29	3.7	90	70	<d	<d
66	TMA-5	T1	61	4.7	94	52	1.0	<d
64	TMA-5	T2	409	43	925	495	12	3.3
63	TMA-5	X	271	20	511	454	8.1	3.1
63 rep			280 (3%)	24 (18%)	571 (11%)	381 (17%)	13 (47%)	<d
2	TMA-5	T1	15	3.2	25	24	1.7	<d
8	TMA-5	T2	70	16	117	156	<d	<d
4	TMA-5	X	317	44	474	324	8.8	1.7
4 rep			377 (18%)	61 (33%)	585 (21%)	425 (27%)	10 (17%)	<d
203	TMA-5	S	60	5.2	17	13	<d	<d
10	TMA-5	T1	20	2.2	48	35	<d	<d
6	TMA-5	T2	21	4.0	36	28	1.3	<d
1	TMA-5	X	89	7.7	77	59	3.5	<d
1 rep			71 (23%)	7.7 (1%)	60 (25%)	71 (20%)	<d	<d
108	TMA-5	X	22	1.1	10	15	<d	<d
108 rep			38 (55%)	<d	17 (58%)	14. (7%)	<d	<d
120	TMA-5	X2	437	46	144	115	35	4.3
120 rep			480 (9%)	51 (11%)	161 (11%)	240 (70%)	45 (26%)	4.4 (3.1%)
100	TMA-5	X	28	<d	20	18	<d	<d
100 rep			35 (22%)	<d	24 (19%)	29 (44%)	<d	<d
114	TMA-5	T2	66	42	40	66	23	1.2
117	TMA-5	X2	201	250	88	102	106	<d
117 rep			204 (1%)	233 (7%)	84 (5%)	80 (25%)	93 (13%)	<d
20	PMA-2	contact	1523	60	<d	<d	503	6.9
22	TMA-5	contact	53	4	11	10	16	<d

*The PMA-1A mines were buried 2 cm to the top of the mine; the TMA-5 mines were buried 8.5 cm to the top. See Table 6.
†S—surface soil; T1—2-cm-long core just under surface soil; T2—core of soil between T1 and X; X—2-cm-long core of soil just above the center of the mine's top surface.
**Below detection.

Table 5. Mean concentrations (μg/kg) of compounds spiked into Fort Leonard Wood soil and incubated at room temperature (22 ± 2°C). (From Miyares and Jenkins, in press.)

Incubation time	*1,3-DNB*	*2,4,6-TNT*	*2,4-DNT*	*2,6-DNT*
0 hour	458	563	513	533
4 hour	421	461	472	504
1 day	360	306	428	452
3 day	318	241	433	440
7 day	253	173	396	396
9 day	245	165	422	412
13 day	187	125	355	323
20 day	117	79	307	239

Objective

The objective of the experiments presented here is to determine the identities and concentrations of ERCs that accumulate in the soil profile near buried land mines, as a function of environmental factors, mine type, and time after burial.

MATERIALS AND METHODS

Initial characterization of the soils at the DARPA Electronic Nose Testing Facility, Fort Leonard Wood, Missouri

Prior to the development of the site at Fort Leonard Wood, soil samples were collected and analyzed by the Lawrence Livermore National Laboratory for nitroaromatic and nitramine explosives using gas chromatography with an electron capture detector (GC-ECD). No nitroaromatics or nitramines were detectable at concentrations above the detection limit of the method (about 1 μg/kg). A random set of these samples was also analyzed at CRREL and our results agreed with those from Lawrence Livermore.

The site was also screened using a team of canines trained to detect explosives. The dogs showed some interest in a few areas, but they did not positively detect explosives anywhere.

Land mine burial

The initial set of land mines was buried in a research minefield at the DARPA Electronic Nose Testing Facility during the week of 19 July 1998. Four types of Yugoslavian mines were buried (Table 6): two antitank mines—the plastic-cased TMA-5 (Fig. 1a), and the metallic-cased TMM-1 (Fig. 1b)—and two plastic-cased antipersonnel mines—the PMA-1A (Fig. 1c) and the PMA-2 (Fig. 1d). The main charge in all four of these types of land mines is TNT. The number of indi-

Table 6. Specifications of the land mines buried at the Fort Leonard Wood research minefield.

Type	*Date buried*	*Main charge*	*Booster*	*Size (L × W × H) (mm)*	*Burial depth† (cm)*
TMA-5	7/98	TNT (5.5 kg)	RDX (200 g)	(312 × 275 × 113)	8.5
TMM-1	7/98	TNT (5.6 kg)	None	(326 diam. × 90)	6
PMA-1A	7/98	TNT (200 g)	None	(140 × 68 × 31)	2
PMA-2	7/98	TNT (100 g)	Hexogen*(14.5 g)	(68 diam. × 30)	4
Type 72	6/99	TNT/RDX (5.4 kg)	PETN	(270 diam. × 100)	15
VS2.2	6/99	TNT/RDX (1.93 kg)	None	(240 diam. × 117.6)	8
TS50	6/99	TNT/RDX (50 g)	None	(90 diam. × 45)	2 or 5
VS50	6/99	RDX (43 g)	None	(90 diam. × 45)	2 or 5

*Hexogen is 90% RDX.
†Depth from the soil surface to the top of mine.

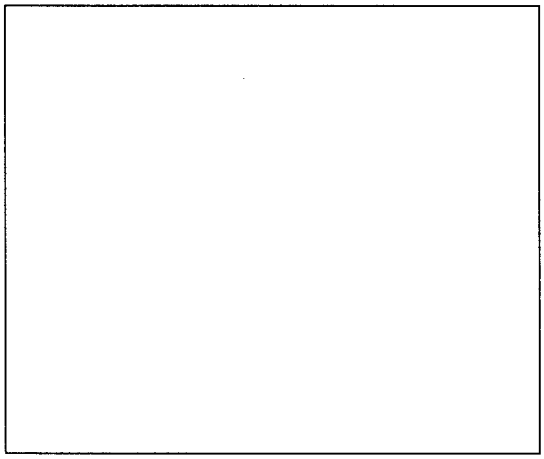

a. TMA-5.

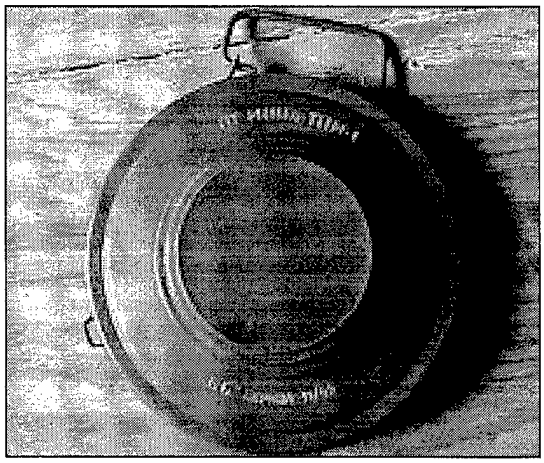

b. TMM-1.

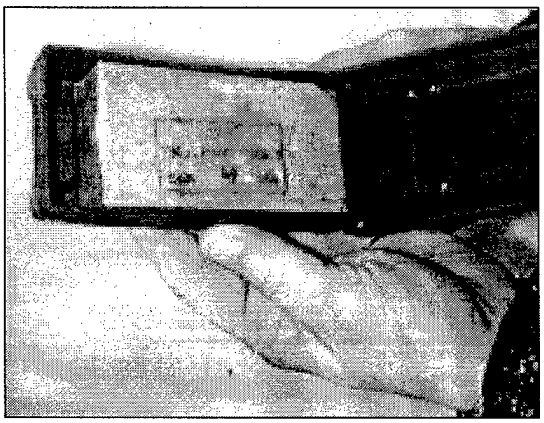

c. PMA-1A.

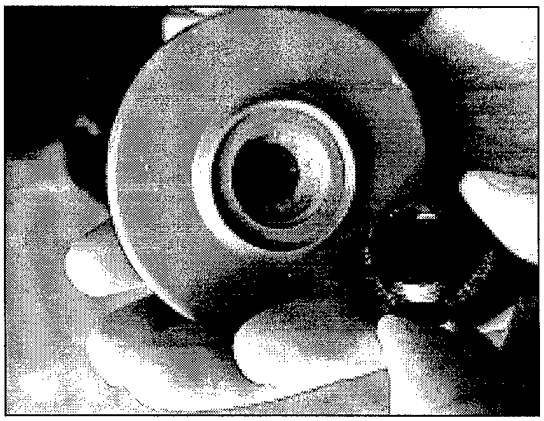

d. PMA-2.

Figure 1. Land mines.

vidual mines of each type buried at the FLW site is confidential, as the site is being used for blind testing of prototype land mine detectors.

All mines were buried manually according to manufacturers' specifications; the mines were covered with the same soil that was removed from the hole and, when possible, the vegetative cover was replaced and watered to allow the mine scar to heal as rapidly as possible.

A second set of mines was buried during the week of 13 April 1999. These mines included the Type 72, a Chinese plastic-cased antitank mine containing 5.4 kg of 50%TNT:50%RDX; the VS2.2, an Italian antitank land mine containing 1.93 kg of Composition B (RDX/TNT 60%/40%); the TS50, an Italian plastic-cased antipersonnel mine containing 50 g of T4 (TNT/RDX); and the VS-50, an Italian plastic-cased antipersonnel mine containing 43 g of pressed RDX. These mines were buried as described above. Burial depths for the two sets of mines varied from 2 to 15 cm to their tops, in accordance with manufacturers' specifications (Table 6).

Background characterization of soils at the DARPA Electronic Nose Testing Facility

A series of soil samples was collected from areas at least 5 m from the nearest buried mine to allow us to characterize the physical and chemical nature of the soils at the site. Soil samples were collected on three occasions by removing surface litter and collecting the top several inches of soil. Nine samples were collected in the first sampling event (samples designated 1 through 9); 50 samples were collected during the second sampling event (samples designated with numerals followed by a or b to indicate the upper 5–8 cm of soil, a, or the next 5–8 cm, b); and 12 samples were

collected during the third sampling event (designated with numerals followed by R to indicate repetition of previously sampled locations) (Fig. 2). The third sampling event was conducted because an ice chest of samples from the second sampling event was lost in shipping. Samples lost included samples 1–6 a and b, 7 a, 8–12 a and b, 14 a and b, and 15 b. For the third sampling event, no depth distinctions were made. Samples were packaged in plastic baggies and shipped on ice to ERDC-EL. There, they were air dried, ground, and run through a 2-mm sieve to remove pebbles. Each sample was thoroughly mixed and refrigerated until it was tested.

Only soils from the first sampling event were characterized for physical parameters plus total organic carbon (TOC), total Kjeldahl nitrogen (TKN), cation exchange capacity (CEC), and pH; sample quantity was insufficient in the second and third sampling events. However, notes were recorded from visual inspection of each sample. Soil moisture holding capacity or field capacity was determined using methods described in Klute (1986). Field capacity is the amount of water the soil will hold after being saturated and allowed to drain under the tension of the dry soil below. It is measured at 1/3 bar. TOC was determined by wet combustion (Nelson and Sommers 1982). CEC was determined by the methods of Rhoades (1982). The pH was determined with a pH electrode on a 1:1 soil-to-water slurry. Exchangeable iron was determined by using 1N ammonium acetate according to the methods of Olson and Ellis (1982). TKN was determined according to the methods of Bremner and Mulvaney (1982). Particle size distribution was determined by two methods: hydrometer (Day 1956, as modified by Patrick 1958, Day 1965, ASTM 1985), and standard sieve analysis, followed by classification according to the Unified Soil Classification System (U.S. Army Corps of Engineers 1960), and the USDA classification system (Gee and Bauder 1986). The hydrometer method classifies the finer particles, while the sieve analysis characterizes larger-sized particles.

Three samples from the first sampling event, five from the second, and five from the third were used in partitioning tests to obtain estimates of the soil/water partition coefficients (K_d). Subsamples of the 13 soils (2 g each) were mixed with 8 mL of a stock solution containing the following five concentrations of both TNT and 2,4-DNT: 1.5, 1.25, 1.00, 0.75, and 0.50 mg/L. Soils were shaken for 24 hours, centrifuged, and the solution phase was analyzed as described below. When transformation products of TNT or 2,4-DNT were detected, their concentrations were added to parent com-

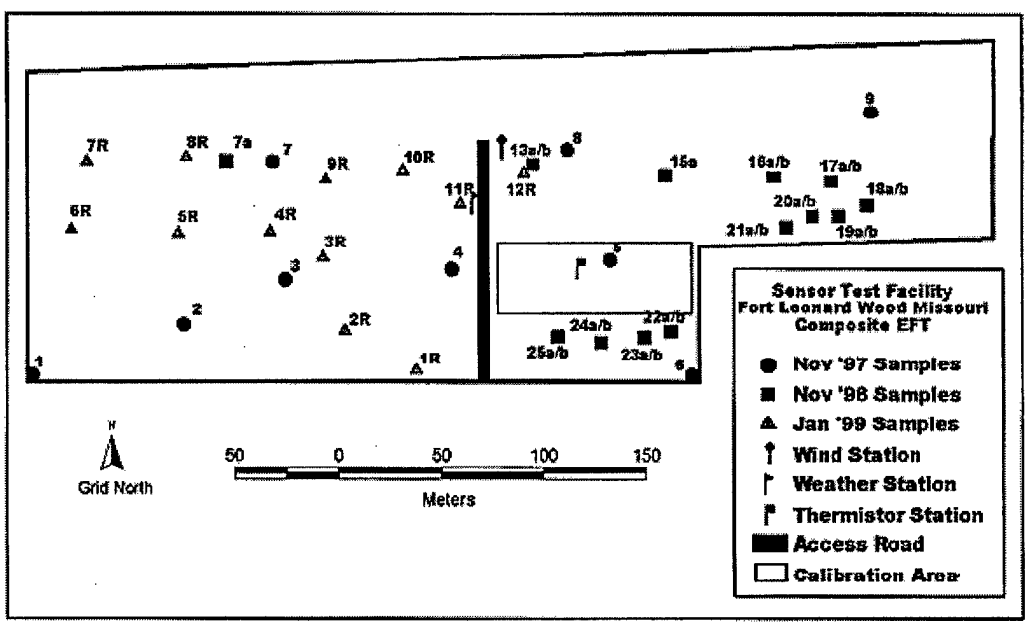

Figure 2. Location of soil samples for physical characterization at Fort Leonard Wood, Missouri.

pound concentrations to obtain total solution phase contaminant concentration. Total analyte concentration in the soil phase was determined by the difference between total mass of analyte added and total solution phase contaminant mass. For one soil (soil 4), 2,4-DNT was partitioned alone and both soil and solution phases were analyzed to assure that determination of soil concentration by difference was adequate. Soil phase and solution phase concentrations were plotted and a linear regression analysis was conducted to determine the slope of the graph, which represents the partition coefficient as described in eq 1

$$q = K_d C \quad (1)$$

where

q = soil phase concentration (mg /kg)
K_d = partitioning coefficient (L /kg)
C = solution phase concentration (mg/ L).

For chemical analyses, the aqueous samples were brought to room temperature, a 0.5-mL aliquot was removed, combined with 2.0 mL of acetonitrile, and shaken to ensure complete mixing. Three soil samples from the first sampling, and five each from the second and third samplings, were analyzed in duplicate. The mixed samples were filtered through a Millex-SR (0.5-µm) disposable filter, with the first five drops being discarded and the remainder being collected in a 2-mL amber glass autosampler vial. A control solution containing 2,4,6-TNT, 2,4-DNT, and 2,6-DNT at a concentration of 2.8 mg of each analyte per liter was prepared in reagent grade water. Two 0.5-mL aliquots of the control solution were prepared as described above and analyzed with each set of samples. An acetonitrile (ACN) blank was also processed with each set of samples. Using reverse phase high performance liquid chromatography (RP-HPLC), we separated analytes on an LC-8 (150 × 3.9 mm, Nova-Pak, Waters) column eluted with a water/isopropyl alcohol eluant (86/14, v/v) at a flow rate of 1.4 mL/min. Analytes were detected using a variable wavelength UV detector set to 254 nm. Data were collected on a Hewlett-Packard digital integrator programmed in peak height mode. Concentrations of analytes were determined against standards prepared from Standard Analytical Reference Materials (SARM) (U.S. Army Environmental Center, Aberdeen Proving Ground, Maryland).

Soil sampling for characterization of explosives-related chemical signatures

The soils at the research minefield were sampled on the dates given in Table 7. The protocol for sampling varied from sampling period to sampling period. Details of the soil sampling protocol used for each period are provided in the following sections.

Table 7. Field sampling dates at Fort Leonard Wood research minefield.

*Sampling date**	*Days since burial of mines on 19 July 1998*
27 August 1998	41
5 November 1998	111
13 April 1999	270
20 July 1999	368 (97)†
1 November 1999	472 (201)†

*Mine burial and soil sampling each took several days. The dates given are the first day of the referenced activity.
†The number of days after burying for the Type 72 mines was computed versus a burial date of 13 April 1999.

Soil sample collection during August and November 1998

For the initial sampling in August 1998, the locations of the buried mines were still visible, largely because the drought conditions that had predominated since mine burial prevented substantial plant regrowth. Soil samples were collected on several sides of the larger antitank mines, but generally only along one side of the smaller antipersonnel mines so that we didn't overly disturb the areas near these mines. We collected these perimeter samples just off the edges of the mines, as close to the edge as possible, without touching the mines themselves. To collect the soils, any surface vegetation over the mine was removed using scissors to cut the plant stems flush with the ground surface. The specific locations to be sampled for each mine were identified and soil samples were collected at each location as follows. A metal paint scrapper was used to remove a thin layer of surface soil, usually about 0.2 cm. This soil was placed in a pre-cleaned, 125-mL, wide-mouth glass bottle, which was capped and stored in an ice-filled cooler. In some locations, often over the center of the mine, only a surface sample was collected. Around the perimeter of the mines, where deeper samples were to be collected, a 3/4-in. (1.9-cm) soil corer barrel was placed on the spot where the surface layer had been removed and it was carefully driven into the ground to the appropriate depth for the type of mine being sampled. The soil increment was removed from the core barrel and placed in a pre-cleaned, 125-mL, wide-mouth glass bottle; the corer was then wiped clean and rinsed with acetone. The core barrel was then replaced in the hole and the corer was advanced to the next depth interval of interest. The soil increments collected for each mine type are described in Table 8.

Table 8. Depths (cm) to which soil was collected for each type of land mine during the August and November 1998 sampling events at the Fort Leonard Wood research minefield.

Mine type				
TMA-5	Surface	0–5	5–10	10–15
TMM-1	Surface	0–5	5–10	10–15
PMA-1A	Surface	0–3	3–6	
PMA-2	Surface	0–3	3–6	

Soil sample collection during April, July, and November 1999

The soil sampling protocol was modified for April, July, and November 1999, on the basis of results obtained in the first two sampling periods. First, the land mine location was identified using DGPS (Differential Global Positioning System). The center of the mine could be located using this system to within 1 cm. Metal tent pegs were then gently tapped into the ground, in effect probing for the mine, to define the exact location of its perimeter.

Any surface vegetation over the mine was removed using scissors to cut plant stems flush with the ground surface. The specific locations to be sampled for each mine were identified and the soil samples were collected as follows. A metal paint scraper was used to remove a thin layer of surface soil, usually about 0.2 cm. This soil was placed in a 125-mL, pre-cleaned, wide-mouth glass bottle, which was capped and stored in an ice-filled cooler. Once the surface sample was removed, a 3/4-in. (1.9-cm) soil corer barrel was placed on the spot where the surface layer had been removed and it was carefully driven into the ground to the appropriate depth for the mine type being sampled. The soil increment was removed from the core barrel and placed in a 125-mL, pre-cleaned, wide-mouth glass bottle. The core barrel was replaced in the hole and the corer was advanced to the next depth interval of interest. The soil increments collected for each mine type are presented in Table 9. The metal corer barrel and scrapper were wiped clean between sampling locations and dipped into acetone to reduce the possibility of cross contamination among samples.

Soil sample transport and storage

For all sampling events, soil samples were packed in ice within a few minutes of collection and transported to the U.S. Army Engineer Research and Development Center, Cold Regions Research and Engineering Laboratory (ERDC/CRREL), in Hanover, New Hampshire, by overnight carrier, either the day of collection or the following day. Once the samples arrived at CRREL, they were immediately placed in a coldroom at –29 ± 3°C until they were processed, usually within a week of collection.

Soil extraction

For extraction, the jars containing the soil samples were moved to the laboratory and allowed to warm sufficiently to permit subsampling. Samples were homogenized by breaking up the material in the sample jar using a spatula and stirring the contents thoroughly. A 2.00-g sample of undried soil was then removed from the jar in several increments and placed in a 22-mL scintillation vial. A 5.00-mL aliquot of acetonitrile (AcN) was added to each sample, the vials were placed on a vortex mixer for 30 seconds to suspend the soil particles, and then they were placed in an ultrasonic bath for 18 hours. The temperature of the bath was maintained at less than 25°C with cooling water.

Table 9. Depths (cm) to which soil was collected for each type of land mine for samples collected in April, July, and November 1999 at the Fort Leonard Wood research minefield.

Mine type				
TMA-5	Surface	0–5	5–10	10–15
TMM-1	Surface	0–5	5–10	10–15
PMA-1A	Surface	0–2.5	2.5–5	
PMA-2	Surface	0–2.5	2.5–5	
Type 72	Surface	0–5	5–15	15–20

Table 10. Retention times on analytical and confirmation columns.

Analyte	Retention time (min)				
	*HP-5** 1.5 µm	*RTX-225†* 1.0 µm	*RTX-200*** 1.5 µm	*RTX-200††* 1.5 µm	*RTX-225†* 0.1 µm
NB	1.16	1.07		2.69	
o-NT	1.74	1.46		3.41	0.42
m-NT	2.13	1.87		4.04	0.52
p-NT	2.32	2.19		4.34	0.63
NG	4.14	5.17		7.75	
1,4-DNB	4.87	6.6	9.79	7.78	3.99
1,3-DNB	5.10	6.92	10.52	8.16	4.29
2,6-DNT	5.27	6.53	9.94	7.83	3.96
1,2-DNB	5.33	7.84	11.49	8.71	5.19
3-Nitroaniline	5.48	8.32		7.68	5.70
2,5-DNT	5.69	7.04		8.43	4.45
2,4-Dinitrophenol	5.69			8.39	
tri-Nitroso-RDX	5.73				
2-Amino-6-NT	5.91	8.23		8.04	
2,3-DNT	6.00	7.96		9.22	5.27
2,4-DNT	6.05	7.58	12.17	9.05	4.97
4-Amino-2-NT	6.17	8.51		8.2	5.94
3,5-DNT	6.28	7.84		9.46	5.19
3,4-DNT	6.68	9.00	14.39	10.25	6.33
2-Amino-4-NT	6.76	9.24		9.04	6.59
di-Nitroso-RDX	7.30				
TNB	7.79	11.13	17.01	11.52	8.46
2,4,6-TNT	7.95	10.61	16.5	11.25	8.01
mono-Nitroso-RDX	8.45				
PETN	8.85	7.23		13.00	
2,4,5-TNT	8.86			12.53	9.43
2,3,4-TNT	9.12			12.93	9.55
RDX	9.55	15.06	20.84	13.38	12.08
3,4,5-TNT	9.69			13.87	10.49
2,4-Diamino-6-NT	9.77	13.78		12.2	
TAX	10.11				
4-Am-DNT	10.15	13.86	18.98	12.54	11.07
3,5-Dinitrophenol	10.18			11.73	
3,5-DNA	10.24	14.63	19.87	13.00	11.69
2,6-Diamino-4-NT	10.48	14.65		12.97	
2-Am-DNT	10.59	14.43	20.87	13.38	11.55
Tetryl	11.47		25.17	14.74	12.08
HMX	15.66				

*HP-5 oven program 100°C for 2 minutes, to 250°C at 10°/min and held 3 minutes; injector 250°C; detector 280°C.
†RTX-225 oven program: 100°C for 2 minutes, to 220°C at 10°/min and held 6 minutes; injector 220°C; detector 220°C.
**RTX-200 oven program: 100°C for 1 minute, to 190°C at 5°C/min, to 200°C at 1°C/min, to 250°C at 20°C/min.
††RTX-200 oven program 100°C for 2 minutes, to 260°C at 10°/min and held 1 minute; injector 250°C, detector 280°C.

The vials were then removed from the bath and allowed to stand undisturbed for 30 minutes. A 2.5-mL aliquot of each extract was removed using a glass syringe and filtered through a 25-mm Millex-FH (0.45-mm) disposable filter, with the first milliliter being discarded and the remainder being collected in a clean autosampler vial.

Gas chromatography-electron capture (GC-ECD) determination

All GC-ECD results were obtained on an HP6890 gas chromatograph equipped with a micro cell Ni^{63} ECD (300°C). We used direct injection (250°C) of 1-µL soil extracts in a packed port that was equipped with a deactivated Restek Uniliner. Primary analysis

was conducted on a 6-m × 0.53-mm (or 0.32-mm) ID fused-silica, 1.5-µm film thickness of 5%-(phenyl)-95%-dimethyl polysiloxane (either HP-5 from Hewlett-Packard, or a RTX-5 from Restek). The GC oven was temperature programmed as follows: 100°C for 2 minutes, 10°C/min ramp to 250°C, and 3-minute hold. The carrier gas was either hydrogen or helium at 12 to 15 mL/min (linear velocity about 100 cm/s). The makeup gas was nitrogen (30 to 40 mL/min). If a peak was observed in the retention window for a specific ERC compound, the extract was reanalyzed on one of the following two confirmation columns: Restek RTX-225 (50% cyanopropylmethyl, 50% phenyl methyl polysiloxane) or Restek RTX-200 (crossbond trifluoropropyl methyl polysiloxane). If the identity of the peak was still in doubt after the first confirmation column, the extract was reanalyzed on the second confirmation column. Further details of the procedure may be found in SW-846 Method 8095 (U.S. Environmental Protection Agency 1998). Retention times for the target signatures are presented in Table 10. Detection limits reported by Walsh and Ranney (1999) are shown in Table 11.

If analyte concentrations were within the linear range of the ECD, concentrations reported were taken from the determination on the primary column, unless there appeared to be co-elution with another compound. In such cases, reported concentrations were taken from determination on one of the confirmation columns. For concentrations that appeared to be above the linear range of the ECD (about 200 µg/L), extracts were analyzed by reversed phase high performance liquid chromatography with an ultra violet detector (RP-HPLC-UV) as described below.

Table 11. Method detection limits (µg/kg) of nitroaromatics and nitramines in soil determined by GC-ECD. (After Walsh and Ranney 1999.)

Analyte	
1,3-DNB	0.73
1,4-DNB	0.86
1,2-DNB	0.64
2,6-DNT	0.69
2,4-DNT	0.69
TNB	1.6
2,4,6-TNT	0.45
RDX	3.4
4-Am-DNT	1.5
3,5-DNA	2.1
2-Am-DNT	2.0
NB	17
o-NT	12
m-NT	11
p-NT	10
Tetryl	20
HMX	25
3-NA	????

RP-HPLC-UV determination

Soil extracts with analyte concentrations above 200 µg/L were often also analyzed by RP-HPLC-UV on a modular system composed of a Spectra-Physics Model SP8800 ternary HPLC pump, a Spectra-Physics Spectra 100 variable wavelength UV detector set at 254 nm (cell path 1 cm), a Dynatech Model LC241 auto sampler equipped with a Rheodyne Model 7125 sample loop injector, and a Hewlett-Packard 3396A digital integrator set to measure peak heights.

Extracts were diluted with reagent grade water (0.50 mL acetonitrile extract and 2.00 mL of water). Separations were conducted on a 15-cm × 3.9-mm (4 µm) NovaPak C-8 column (Waters) eluted with 85/15 water/isopropanol (v/v) at 1.4 mL/min. Samples were introduced by overfilling a 100-mL sampling loop. Retention times of the analytes of interest are shown in Table 12. Concentrations were estimated against multianalyte standards prepared from standard analytical reference materials (SARM). Quantitative results were obtained from peak heights on a variable wavelength detector set at 254 nm.

Sampling to estimate mine surface contamination on land mines that had been buried for over 1 year

After the mines had been removed from the ground to allow soil sampling under them in July and November 1999, they were vigorously brushed to remove a majority of the adhered soil. However, it should be noted that the mines still had some soil on their outside surfaces, but we did not wash it off because of the possi-

Table 12. RP-HPLC retention times (minutes) for land mine signature compounds present in high concentration.

Analyte	
RDX	3.0
3-NA	3.5
1,3-DNB	4.8
2,4,6-TNT	5.4
2-Am-6-NT	5.9
4-Am-2-NT	6.5
2-Am-4-NT	6.9
2,4-DNT	10.9
2,6-DNT	13.4
4-Am-DNT	15.2
2-Am-DNT	17.2

bility of removing the explosives contamination as well.

The top and bottom surfaces of the mines were independently sampled as follows. A number of filter paper disks (1.5 cm) (Whatman) that had been presoaked in methanol were placed randomly, using stainless steel forceps, on the mine surface, and the methanol was allowed to evaporate. The filter disks were then transferred to 15-mL silanized amber vials (Supelco) containing 3 mL of AcN. The samples were immediately placed on ice in the dark for storage and shipment to the laboratory. Ten filter disks each were used to sample the top and bottom surfaces of the anti-tank mines (TMM-1, TMA-5, and Type 72) and, likewise, three disks were used for each surface of the anti-personal mines (PMA-1A and PMA-2). Thus, the top and bottom area sampled was 17.7 cm^2 for the anti-tank mines and 5.31 cm^2 for the anti-personal mines. Two TMM-1 mines, three Type 72 and PMA-2 mines, and four TMA-5 and PMA-1A mines were sampled.

Additional vials containing only AcN were shipped to the laboratory to serve as solvent blanks. At various times throughout the sampling session, several filter disks were allowed to air dry and then placed into acetonitrile and shipped to the laboratory to serve as sampling blanks.

When the samples arrived at the laboratory, they were stored under the same conditions as the soil samples until analyzed. In preparation for analysis, the samples were allowed to warm to room temperature and the acetonitrile was filtered to remove soil particles, using the same method as filtering soil extracts. The AcN was then analyzed by GC-ECD in a manner similar to the soil extracts.

Analysis of soil and soil headspace vapor to estimate soil–air partition coefficients

Soil samples were collected above, around, and below buried land mines at Fort Leonard Wood in April 1999 and analyzed for munitions as previously described. Twelve of these samples, containing high levels of analytes, were selected for headspace vapor analysis to enable computation of soil–air partition coefficients. Several grams of each soil selected were placed in 40-mL glass vials, the tops of the vials were covered with aluminum foil, and plastic screw caps were placed on top to hold the foil in place. The sides of the vials were covered with aluminum foil to exclude light and they were stored at room temperature for several days to equilibrate with headspace vapor. At the end of the equilibration period, the headspace vapor was sampled using a solid phase micro extraction (SPME) device. The SPME fiber used for this study was coated with a 65-μm film of polydimethylsiloxane/divinylbenzene (PDMS/DVB). The manufacturer (Supelco) calls this their pink fiber. Prior to use, the fiber was conditioned following the recommendation of the manufacturer. Just before use, each fiber was thermally desorbed at 250°C in a GC-injection port to assure that it was clean.

To sample the headspace, the vial cap was removed and the aluminum foil was punctured by the needle housing of the fiber. The fiber was extended into the headspace for a sampling period of 5 to 20 minutes. After the sampling was complete, the fiber was withdrawn into its protective needle and the needle was removed from the vial. The outside of the needle was wiped with a tissue wetted with acetone to eliminate any vapors sorbed to the metal. The needle was then inserted into the injection port of the gas chromatograph for thermal desorption and analysis by GC-ECD. Analysis conditions were the same as for soil extracts. The mass of analytes desorbed was determined by use of reference standards (SARMS) in acetonitrile. Concentrations were then calculated by dividing the desorbed mass by the volume of vapor sampled by the fiber. A description of how the effective sampling volume of this fiber was determined is presented elsewhere (Jenkins et al. 1999). The soil–air ($K_{s/a}$) partitioning coefficient was calculated by dividing the soil concentration in nanograms per gram, as determined previously, by the vapor concentration in nanograms per milliliter. The resulting partition coefficient has the units milliliters of air per gram of soil.

RESULTS AND DISCUSSION

Physical soil characterization

Soils at the DARPA Electronic Nose Testing Facility at Fort Leonard Wood are classified as Plato silt loam (fine, mixed, mesic Aquic Fragiudalfs) according to the USDA soil survey of Pulaski County, Missouri (U.S. Department of Agriculture Soil Conservation Service 1989). The pH values (5.7–6.4) in samples taken in the first sampling set (sites 1–9) were within the range reported by USDA for this location (3.6–7.3) (Table 13), but organic carbon values (0.58–0.84%) were slightly lower than reported by USDA (1–2%). CEC, exchangeable iron, and TKN were moderate to low. Particle size distribution was typical of the soil type described by USDA, except that samples tended to be slightly more sandy than those reported by the USDA (Table 14). Visual observation of soil samples in the second and third sets suggests that these samples were similar to samples in the first set and that soil properties were relatively uniform across the site.

Soil–water partition coefficients (K_d) for the Fort Leonard Wood soils were relatively low for both TNT and 2,4-DNT, ranging from 1.9 to 16.2 for 2,4,6-TNT

Table 13. Characteristics of first set of Fort Leonard Wood soils.

Site	pH	Moisture @ 1/3 bar (%)*	Moisture @ 15 bar (%)	Organic carbon (%)	CEC total (meq/100 g)	Iron-ferrous, exchangeable (ppm)	Total Kjeldahl nitrogen (mg/kg)
1	6.1	34.9	16.2	0.61	8.4	124	29.7
2	6.0	31.7	16.2	0.78	12.0	145	31.4
3	5.8	29.8	12.1	0.61	10.2	156	27.8
4	6.0	30.7	16.9	0.84	12.6	173	30.9
5	5.7	28.4	12.7	0.58	13.1	141	30.8
6	6.0	28.9	12.4	0.74	12.0	159	34.7
7	5.9	31.1	16.1	0.79	10.8	161	32.7
8	6.4	34.5	18.2	0.81	13.5	137	29.8
9	6.1	31.9	17.1	0.64	12.2	163	32.7

*Field capacity: water that the soil will hold after being saturated and allowed to drain under the tension of the dry soil below.

and 1.2 to 6.4 for 2,4-DNT (Table 15). For lower concentrations of 2,4,6-TNT and 2,4-DNT, K_d values would probably be a little higher* (Leggett 1985). These results indicate that ERCs should migrate relatively unimpeded through soils in the solution phase, assuming that they are not chemically or microbiologically transformed.

*Personal communication with J.M. Phelan, Sandia National Laboratories, 1999.

Soil samples collected in August 1998 for characterization of land-mine-related chemical signatures

In August 1998, the first soil samples were collected after the land mines were buried. The climatic conditions at the time of collection were very hot and dry; conditions had remained very dry over the approximately 2-month period since the mines were buried.

In August, 143 soil samples were collected near 16 different mines: six PMA-1A mines, two PMA-2 mines, six TMA-5 mines, and two TMM-1 mines (see App. A

Table 14. Particle size distribution in first set of Fort Leonard Wood soils.

	Hydrometer*			Sieve analysis†			Classification	
Site	% Clay <0.002 (mm)	0.002–0.050 (mm)	% Sand >0.050 (mm)	% Fines <0.075 (mm)	0.75–4.975 (mm)	% Gravel >4.975 (mm)	USCS**	USDA††
1	32.5	52.5	15	86.3	13.2	0.5	CL (sandy clay)	Silty clay loam
2	17.5	55.0	27.5	89.0	11.0	0.0	CL (clay)	Silt loam
3	7.5	25.0	67.5	42.2	42.7	15.0	SC (gravelly clayey sand)	Sandy loam
4	22.5	47.5	30.0	85.5	13.5	1.0	CL (sandy clay)	Loam
5	37.5	47.5	15.0	86.2	10.5	3.3	CL (clay)	Silty clay loam
6	12.5	30.0	57.5	71.1	18.7	10.1	CL (sandy clay)	Sandy loam
7	15.0	22.5	62.5	84.9	13.2	1.8	CL (sandy clay)	Sandy loam
8	15.0	30.0	55.0	85.9	12.3	1.8	CL (sandy clay)	Sandy loam
9	15.0	32.5	52.5	81.8	15.7	2.5	CL (sandy clay)	Sandy loam

*Day (1956) as modified by Patrick (1958).
†Standard sieve method.
**Unified Soil Classification System (U.S. Army Corps of Engineers 1960).
††U.S. Department of Agriculture classification system (Gee and Bauder 1986).

Table 15. Soil–water partition coefficients (K_d) in L/kg and linear regression coefficients (R^2) for Fort Leonard Wood soils.

Soil sample	2,4,6-TNT		2,4-DNT	
	K_d	R^2	K_d	R^2
4	10.0	0.82	2.6	0.72
5	8.9	0.64	6.4	0.88
8	3.6	0.20	3.7	0.93
1R	16.2	0.98	1.9	0.34
2R	14.9	0.97	4.7	0.57
6R	1.4	0.80	1.2	0.30
9R	2.0	0.68	2.6	0.54
12R	2.4	0.65	2.6	0.51
7b	1.9	0.52	1.5	0.54
16b	3.2	0.78	2.5	0.96
17b	4.4	0.99	3.7	1.00
23b	3.0	0.68	2.0	0.84
25b	2.5	0.82	2.1	0.92

for all the analytical results). ERCs were detected in 28 of these soil samples. Of these samples, 42 were of surface soils; ERCs were detected in only four of them. Samples that were collected deeper and closer to the mine were much more likely to produce positive detections. The chemicals of interest detected in these soils (in order of their frequency of detection) were 2,4-DNT, 2-ADNT, 4-ADNT, 2,4,6-TNT, 1,3-DNB, 2,6-DNT, and TNB (Table 16).

There was a substantial difference in the frequency of detection of ERCs near the different types of mines (Table 16). The highest frequency of detection was for the TMA-5 mines, where ERCs were detected in 23 of the 94 samples collected (24%). The chemicals present most often, and at the highest concentration, were 2,4-DNT, 2-ADNT, 4-ADNT, and 2,4,6-TNT. The highest concentrations were detected in the soil segments nearest the mines, generally in the 10- to 15-cm depth zone. Concentrations as high as 4270 µg/kg were detected in this zone for 2,4,6-TNT, 3510 µg/kg for 2,4-DNT, 2690 µg/kg for 2-ADNT, and 2760 µg/kg for 4-ADNT.

The frequency of detection was highest overall for the TMA-5 mines. The concentrations of these four compounds declined rapidly for soil samples collected nearer the surface for TMA-5 mines (Table 16). For soils collected at the surface, concentrations were quite low; the highest concentration found for 2,4-DNT at the surface was 60 µg/kg, for 2-ADNT was it 90 µg/kg, for 4-ADNT was it 70 µg/kg, and for 2,4,6-TNT it was only 5.2 µg/kg. The identity and concentrations of ERCs

Table 16. Frequency of detection of ERCs in soil samples collected near buried mines in August 1998.

Mine type	Soil samples collected*	Number of detections Total soil samples (surface samples**)						
		2,4-DNT	2,4,6-TNT	1,3-DNB	2-ADNT	4-ADNT	2,6-DNT	TNB
PMA-1A	20 (9)	3 (0)	3 (0)	3 (0)	4 (1)	4 (1)	1 (0)	0 (0)
PMA-2	9 (2)	1 (0)	1 (0)	1 (0)	0 (0)	0 (0)	1 (0)	0 (0)
TMA-5	94 (27)	23 (3)	20 (2)	15 (0)	23 (3)	23 (3)	9 (0)	1 (0)
TMM-1	20 (4)	0 (0)	0 (0)	0 (0)	0 (0)	0 (0)	0 (0)	0 (0)

*Numbers inside parenthesis in the *Soil samples collected* column refer to the number of surface soil samples that were collected for a given mine type.
**Numbers inside parenthesis in the *Number of detections* columns refer to the number of surface soil samples in which ERCs were detected for a given mine type.

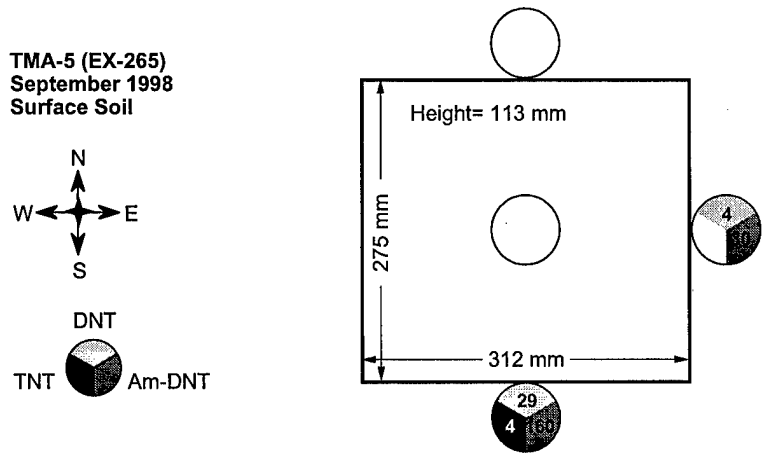

Figure 3. Locations of various ERCs detected in surface soil near buried TMA-5 land mine EX-265 in August 1998.

detected in surface soils near TMA-5 mine EX-265 are shown in Figure 3.

The distributions of ERCs in soils about the TMA-5 mines appears to be quite heterogeneous. For TMA-5 mine EX-264, ERCs were detected in soil samples collected on the east side of the mine, but not from the north, south, or west sides. For mine EX-265, ERCs were detected in soils on the east and south sides, but not the north. For mine EX-292, ERCs were detected in soils on the east and south sides, but not on the west. For mines EX-253 and EX-267, no ERCs were detected in any of the soil samples analyzed, even though samples were collected from all four sides of these mines. This is not to suggest that we expect the ERCs to have a distribution based on geomagnetic orientation. But, rather, we believe that the heterogeneous nature of the mine signature is a result of the local microenvironment unique to each mine location. The detection of ERCs in a given sample may be related to whether or not we fortuitously selected an area where they had accumulated.

ERCs were detected in 4 of the 20 soil samples collected near PMA-1A mines (20%). Qualitatively, the chemicals detected in the subsurface soil samples were 2,4-DNT, 2-ADNT, 4-ADNT, 2,4,6-TNT, 1,3-DNB, and 2,6-DNT. The highest concentrations observed were much lower than those found near the TMA-5 mines; for 2,4-DNT the maximum concentration was 77 μg/kg, for 2-ADNT it was 314 μg/kg, for 4-ADNT it was 317 μg/kg, for 1,3-DNB it was 32 μg/kg, and for 2,4,6-TNT it was only 1.5 μg/kg. ERCs (2-ADNT and 4-ADNT) were only detected in one surface soil sample collected near PMA-1A mines.

ERCs were detected in only one soil sample from areas with buried PMA-2 land mines, and that soil was in direct contact with the mine. No ERCs were detected in any of the soil samples collected near TMM1 mines.

Overall, the results from analysis of these initial soil samples tell us that ERCs were accumulating in the soil near some of the mines, particularly some of the TMA-5 and PMA-1A mines. Of the major ERC components (2,4-DNT, 1,3-DNB, and 2,4,6-TNT) detected on mine surfaces (Leggett et al. 2000), and in mine flux (George et al. 1999), 2,4-DNT appears to be accumulating to the greatest extent in soil near the buried mines. 2,4,6-TNT, on the other hand, appears to be transforming rapidly in the soil to 2-ADNT and 4-ADNT, these two transformation products often being present at the highest concentration in soil for any of the ERCs. This result agrees with the relative environmental stability of 2,4,6-TNT and 2,4-DNT that was determined in soil stability tests (Maskarinec et al. 1991, Grant et al. 1993, Miyares and Jenkins, in press). 1,3-DNB was detected less often than 2,4-DNT (and at lower concentration) in these soil samples as well, and never in any of the surface soils. It is also less stable than 2,4-DNT in soil (Miyares and Jenkins, in press), and may be transforming to 3-nitroaniline (3-NA). We did not specifically target 3-NA in this first set of soil analyses and, hence, we cannot comment on its presence or absence in these samples.

The lack of more significant concentrations of ERCs in the surface soils observed may be ascribable to limited mobility of these compounds under the drought conditions that predominated since the mines were buried. Laboratory studies and current knowledge of the behavior of ERCs in a soil matrix indicate that the major pathways for explosives migration to the surface

are transport within water solution through evapotranspiration and capillary rise, and vapor diffusion through soil pore space. Partition coefficients quantify the equilibrium distribution of analytes between phases under a specific condition. Soil–air partition coefficients have been found to depend highly on soil moisture content; the drier the soils are, the more strongly are explosives-related compounds bound to the soil (Jenkins et al. 1999, George et al. 1999, Webb et al. 1998). When soils are moist, i.e., there are more than four monomolecular layers of water covering the soil particles, transport is dominated by vapor diffusion (Webb, in press). However, under drying conditions, explosives partition in the water to the degree determined by the combination of the water–air, air–soil, and water–soil partition coefficients. The ERCs that have partitioned into the soil water are subsequently carried toward the soil surface with capillary water, but at a rate that is slower than that of water, owing to sorption–desorption effects. Once at the soil surface, ERCs with low vapor pressures will be deposited on surface particles as the water evaporates. When there is little subsurface water, explosives are bound to soil and migration is limited to the very slow rate dominated by vapor diffusion under a condition in which the soil–air partition coefficient is large. Such was the case prior to the August 1998 soil sampling event.

Soil samples collected in November 1998

The second set of soil samples was collected at Fort Leonard Wood in November 1998: 235 were taken near 17 buried mines (six PMA-1A mines, three PMA-2 mines, six TMA-5 mines, and two TMM-1 mines). For all but one of these mines, samples were collected in the same manner as described above. The soil near one TMA-5 mine (EX-268) was more extensively sampled; 97 samples were collected near this mine alone. During sampling, this mine was removed from the ground and samples were collected under it as well. Unfortunately, during shipment to CRREL, 32 of the 235 soil samples were in a cooler that was lost and never located by the overnight carrier. Thus, only 203 samples were analyzed (App. B). In addition to GC-ECD analysis, the extracts from these soils were all analyzed by RP-HPLC as well, to allow measurement of 3-NA, 2-ANT, and 4-ANT, which all have low response factors on the GC-ECD.

We observed 19 different ERCs in at least one of the soil samples (but not all in the same sample). The most commonly found analytes (in order of frequency of detection) were 2-ADNT, 4-ADNT, 2,4-DNT, 2,4,6-TNT, 3-NA, and 1,3-DNB. Other compounds identified included several other isomers of DNT (2,6-, 2,5-, 3,5-, 3,4-, 2,3-), other isomers of DNB (1,2-, and 1,4-), two additional isomers of TNT (2,3,4-, 2,4,5), 2-ANT, 4-ANT, TNB, and 3,5-dinitroaniline (3,5-DNA).

We specifically analyzed for 3-NA in the November samples because of the very low concentrations of 1,3-DNB detected in the August samples. Likewise, we targeted 2-ANT and 4-ANT, environmental reduction products of 2,4-DNT (Miyares and Jenkins, in press). We speculated that 3-NA might form from environmental transformation of 1,3-DNB, and 2-ANT and 4-ANT might form from 2,4-DNT in a manner analogous to the accumulation of 2-ADNT and 4-ADNT from transformation of 2,4,6-TNT. Because 3-NA, 2-ANT, and 4-ANT only have one nitro group on their aromatic rings, the response factors for these ERCs on the GC-ECD are very low compared with the other target analytes that contain two or more nitro groups. Thus, we analyzed the extracts using RP-HPLC in an attempt to obtain quantitative information for these analytes.

We did find 3-NA to be present in soils when 2,4-DNT concentrations were high, and also in some surface samples. The vapor pressure of 3-NA is 3.75×10^{-5} torr, so it appears that 3-NA could be an important signature for mine detection methods based on vapor detection.

The results for 2-ANT and 4-ANT were quite different from those for 3-NA. These analytes were only detected in a few samples and never in surface soils in the November samples. This is probably because of their slower rate of formation from transformation of 2,4-DNT (Miyares and Jenkins, in press). Thus, it doesn't appear that these two compounds are important for mine detection.

As in August 1998, soils collected near TMA-5 mines gave the highest frequency of detection of ERCs (67 out of 143, or 47% of the samples) (Table 17). The most frequently detected ERC analytes for this type of mine (in the order of frequency of detection) were 2-ADNT, 4-ADNT, 2,4-DNT, 2,4,6-TNT, 3-NA, and 1,3-DNB.

In the subsurface soil collected under TMA-5 EX-268, concentrations of individual ERCs ranged from less than detection to as high as 9870 and 6930 µg/kg for 2,4-DNT and 2,4,6-TNT, respectively. Generally, the three analytes present at the highest concentrations were 2,4-DNT and the two transformation products of 2,4,6-TNT (2-ADNT and 4-ADNT). The concentrations of 2,4,6-TNT were generally an order of magnitude lower. For surface soils, ERCs were detected in 16 out of 31 samples analyzed. Here, too, the most frequently detected analytes were 2,4-DNT, 2-ADNT, and 4-ADNT, with one measured concentration as high as 1620 µg/kg for 2,4-DNT. Only two samples contained 2,4,6-TNT, with a maximum concentration of 6.9 µg/kg. Figure 4 presents the ERCs detected in surface

Table 17. Frequency of detection of ERCs in soil samples collected near buried mines in November 1998.

Mine type	Soil samples		Number of detections Total soil samples (surface samples**)					
	*Collected**	*Analyzed*	*2,4-DNT*	*2,4,6-TNT*	*1,3-DNB*	*2-ADNT*	*4-ADNT*	*3-NA*
PMA-1A	25	25 (10)	6 (2)	3 (0)	4 (1)	7 (3)	7 (3)	7 (4)
PMA-2	10	9 (4)	0 (0)	0 (0)	0 (0)	2 (1)	2 (1)	1 (1)
TMA-5	173	143 (31)	54 (10)	37 (7)	21 (2)	67 (15)	57 (12)	32 (5)
TMM-1	27	26 (9)	0 (0)	0 (0)	0 (0)	3 (2)	3 (2)	3 (2)

*Numbers inside parenthesis in the *Soil samples* column refer to the number of surface soil samples that were collected for a given mine type.
**Numbers inside parenthesis in the *Number of detections* columns refer to the number of surface soil samples in which ERCs were detected for a given mine type.

soils near TMA-5 mine EX-268, which was extensively sampled. Clearly, it is 2,4-DNT and the transformation products of TNT that have accumulated near the surface, rather than 2,4,6-TNT. Except for one sample, concentrations were less than 53 µg/kg and generally less than 20 µg/kg.

Analysis of the 93 soil samples collected near TMA-5 mine EX-268 confirmed the heterogeneous nature of the ERCs in the soil surrounding this buried mine. It also revealed the large concentrations of ERCs present under the mine. This led to a hypothesis that ERCs were being washed from the contaminated mine surface and deposited in soils under the mine. It is well known that water flows around impenetrable objects and collects under them; this is the same mechanism that is associated with frost heave.

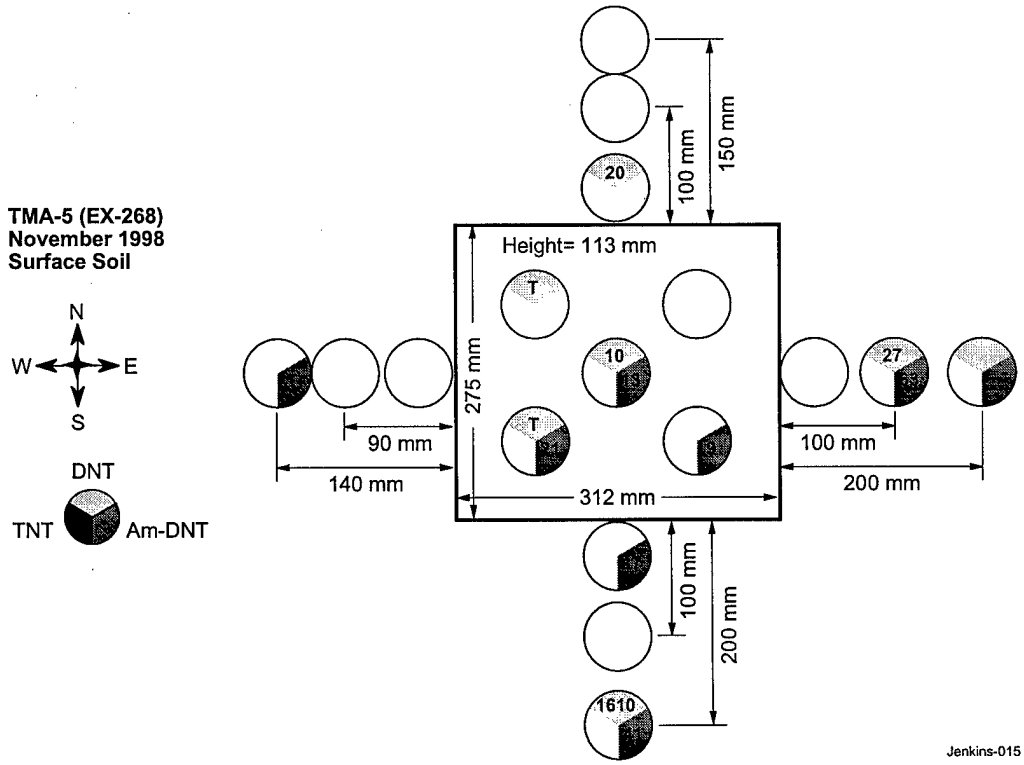

Figure 4. Locations of various ERCs detected in surface soil near buried TMA-5 land mine EX-268 in November 1998 (T = trace).

The ERCs that accumulate under the mine could serve as the source of signature found around the perimeter of the mine to form a discontinuous halo of ERCs at the surface. Furthermore, the water that collects under the mine will become contaminated with explosives compounds at a rate dependent on the water-based flux rate from the mine (Leggett et al., in prep.). In the case of TMA-5 mines, it is our experience from the field sampling events that the underside of the mine remains wet even in the driest soil conditions.

ERCs were also detected in 8 of the 25 soil samples collected near PMA-1A mines. For the surface soils, ERCs were detected in 5 of the 10 samples analyzed. The most frequently detected analytes in the surface were 2-ADNT, 4-ADNT, 3-NA, and 2,4-DNT; 2,4,6-TNT was not detected in any surface soil sample. Concentrations in the surface were as high as 51 µg/kg for 2,4-DNT, 56 µg/kg for 2-ADNT, 33 µg/kg for 4-ADNT, and 125 µg/kg for 3-NA.

ERCs were detected in three of the nine soil samples collected near PMA-2 mines. The analytes detected were 2-ADNT, 4-ADNT, 3-NA, and 3,4-DNT; the highest concentration found was 14 µg/kg for 3-NA in a surface soil sample collected directly above the PMA-2 mine. Neither 2,4-DNT, 1,3-DNB, nor 2,4,6-TNT were detectable in any of the nine samples analyzed.

For the samples collected near the TMM-1 mines, only trace levels of 2-ADNT and 4-ADNT were found in 3 of the 26 samples analyzed. Apparently, the metal casing is a much better seal than the plastic casing, inhibiting leakage of signatures from the mine. The inhibitory nature of metallic cases has also been suggested to explain external contamination data collected from U.S. M16 mines (Leggett et al., 2000).

The major difference in the results for the November samples compared to the August samples is the higher frequency of detection of ERCs in surface soil samples and the detection of 3-NA in some of the surface soils near the TMA-5, PMA-1A, and PMA-2 mines. The enhanced volatility of 3-NA, relative to 2,4,6-TNT, makes it a compound that may be a useful target analyte for detection of mines, but the stability of this compound in soil has not been investigated. We didn't specifically analyze the August 1998 samples for 3-NA.

Soil samples collected in April 1999

On the basis of the results of analysis of soils collected near EX-268 during the November sampling, we decided to reduce the number of mines to be sampled in April 1999, but to increase the number of samples collected near each mine selected. We collected 220 soil samples (App. C), 40 for two PMA-1A mines, 40 for two PMA-2 mines, and 70 each for two TMA-5, and two TMM-1 mines (Table 18).

Analysis of the April 1999 samples indicated that the detection frequency of ERCs remained the highest for TMA-5 mines. For 2,4,6-TNT, detection increased substantially to 47 out of 70 samples, compared to only 37 out of 143 for the November 1998 samples. We attribute this increase to the improved stability of 2,4,6-TNT in soil during the colder months, prior to the April sampling. Increased stability of 2,4,6-TNT at lower temperatures has been observed by Grant et al. (1993) and Miyares and Jenkins (in press). That's why we use rapid cooling of soil samples in our sampling methodology to help preserve 2,4,6-TNT. For the April sampling, there was also an increase in the percentage of samples in which 1,3-DNB was detected, but the increase was less than that observed for 2,4,6-TNT, and was not found for surface samples. A separate analysis of surface samples by RP-HPLC was not conducted for the April

Table 18. Frequency of detection of ERCs in soil samples collected near buried mines in April 1999.

		*Number of detections Total soil samples (surface samples**)*						
Mine type	*Soil samples collected**	*2,4-DNT*	*2,4,6-TNT*	*1,3-DNB*	*2-ADNT*	*4-ADNT*	*3,5-DNT*	*2,5-DNT*
PMA-1A	40 (20)	14 (3)	11 (3)	7(0)	19 (7)	18 (6)	5 (0)	3 (0)
PMA-2	40 (18)	2 (1)	2 (0)	0 (0)	0 (0)	0 (0)	0 (0)	0 (0)
TMA-5	70 (34)	33 (6)	47 (15)	9 (1)	38 (10)	37 (11)	0 (2)	18 (1)
TMM-1	70 (34)	1 (0)	2 (0)	0 (0)	1 (0)	0 (0)	0 (0)	0 (0)

*Numbers inside parenthesis in the *Soil samples collected* column refer to the number of surface soil samples that were collected for a given mine type.
**Numbers inside parenthesis in the *Number of detections* columns refer to the number of surface soil samples in which ERCs were detected for a given mine type.

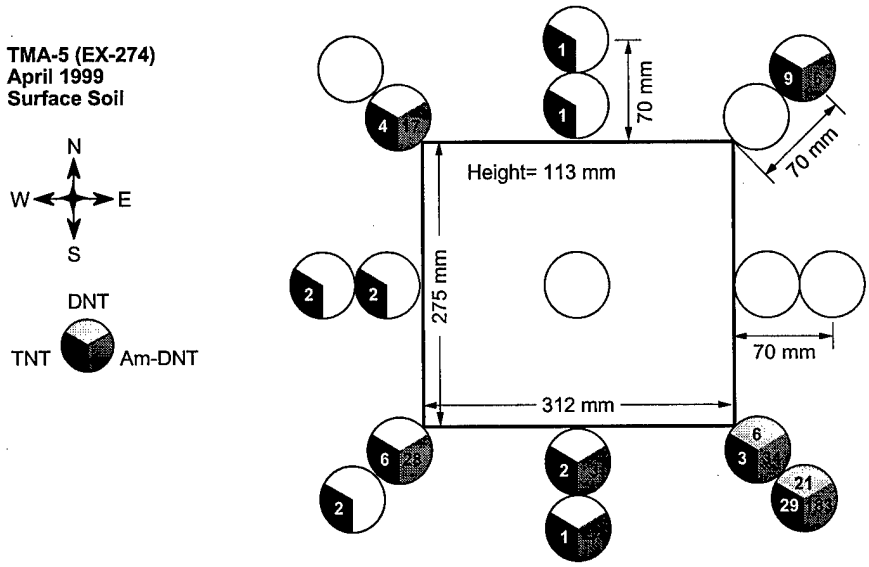

a. EX-274.

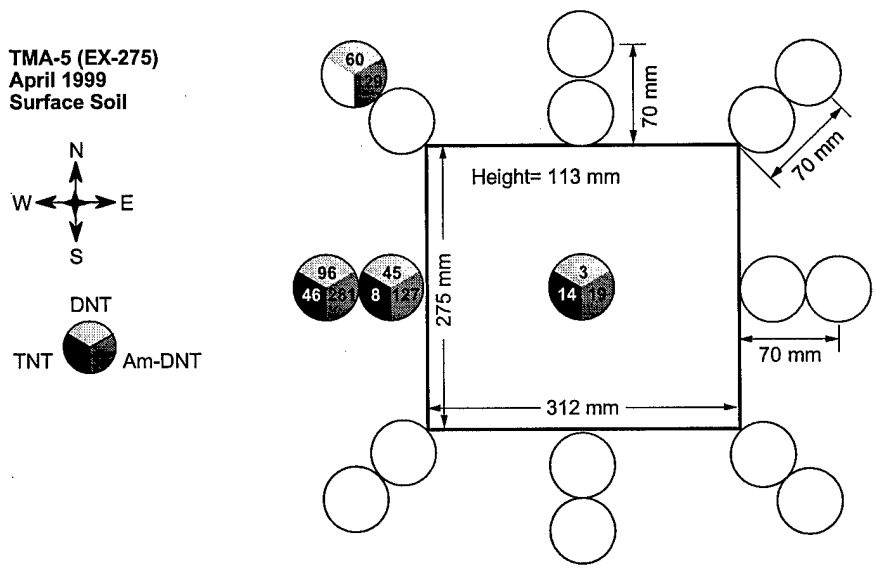

b. EX-275.

Figure 5. Locations of various ERCs detected in surface soil near buried TMA-5 land mines in April 1999.

1999 samples, so the presence or absence of 3-NA in these samples cannot be assessed.

The frequency of detection of 2-ADNT, 4-ADNT, and 2,4-DNT in soils collected in April 1999 near the TMA-5 mines increased slightly compared to November 1998. The pattern of detections for 2,4,6-TNT, 2,4-DNT, and the ADNTs in surface soils for TMA-5 mine EX-274 is shown in Figure 5. Where ERCs were detectable in the surface soils near this mine, concentrations were as high as 29 µg/kg for 2,4,6-TNT, 21 µg/kg for

2,4-DNT, 97 µg/kg for 2-ADNT, and 86 µg/kg for 4-ADNT. Concentrations of TNT were generally less than 10 µg/kg, while the sum of 2-ADNT and 4-ADNT was often several times higher. The pattern of detection (Fig. 5a and b) is consistent with a discontinuous halo caused by ERCs moving upward around the perimeter of the mine from a high concentration source under it. In this case, the concentration of ERCs in the soil under the mine was in thousands of micrograms per kilogram. A heterogeneous pattern of signature detection was also found with the sum of the ADNTs generally present at the highest concentration (Fig. 5a and b). For one of these mines, there were low-level detections of ERCs over the center of the mine, but even here, higher concentrations were detected above the perimeter of the mine.

Because the vapor pressures of 2-ADNT and 4-ADNT are substantially lower than that of DNT, their presence as major components of the ERCs may be difficult to use in a vapor-collection type of mine detector. If, however, particles of surface soils, rather than vapor, were collected, and a device was engineered that could release the signatures from these particles rapidly, the ADNTs would often be the major component of the ERCs available for detection.

The frequency of detection of ERCs in the soils near PMA-1A mines remained similar to that found for samples collected in November 1998 (19 out 40, or 48%). The frequency of detection in surface soils was 7 for 20 or 35%. The most frequently detected analytes were 2-ADNT, 4-ADNT, 2,4-DNT, 2,4,6-TNT, 1,3-DNB, and 3,5-DNT. In surface soils, 2-ADNT and 4-ADNT were the most frequently detected analytes and those found at the highest concentration. The highest measured concentrations in surface soils were 357 µg/kg for both 2-ADNT and 4-ADNT, 58 µg/kg for 2,4-DNT, and 12 µg/kg for 2,4,6-TNT. The pattern of detection of ERCs in the surface soils near EX-020 and EX-025 (Fig. 6) was around the perimeter of the mines, with none detected in the surface samples collected directly over the mines.

For the PMA-2 mines, only 4 samples out of 40 had detectable ERCs (two had 2,4-DNT, and two had 2,4,6-TNT). Only one of these samples was from the surface; 2,4-DNT was detected at 17.8 µg/kg in that sample. Similarly, ERCs were only detected in 3 out of 70 soil samples collected near the TMM-1 mines, and all three were soils collected next to the mines. In general, ERCs do not appear to be accumulating near the TMM-1 or PMA-2 mines at concentrations above analytical detection limits of about 1 µg/kg.

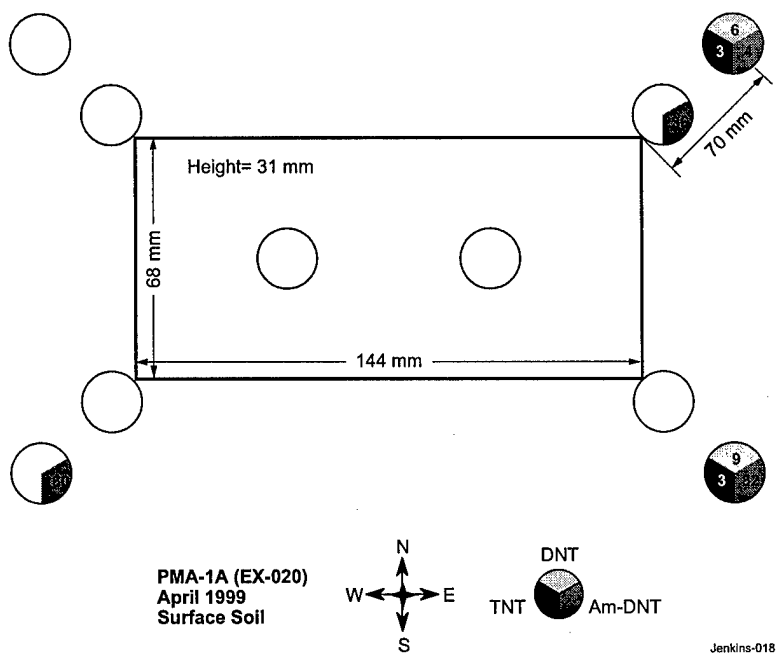

a. EX-020.

Figure 6. Locations of various ERCs detected in surface soil near buried PMA-1A land mines in April 1999.

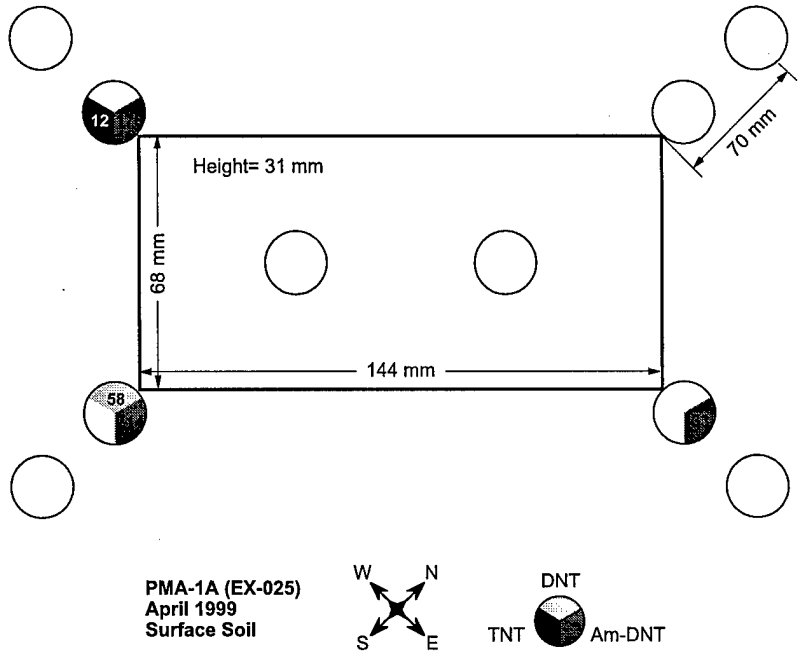

b. EX-025.

Figure 6 *(cont'd).*

Soil samples collected in July 1999

In July 1999, 188 soil samples were collected from the research minefield; 40 near PMA-1A mines, 69 near TMA-5s, 72 near Type 72 mines, 1 from underneath a PMA-2 mine, and 8 from control areas where no mine was buried (App. D).

The frequency of detection of ERCs was 46% for soils near the TMA-5s and 50% for those near PMA-1As, but only 23% for the Type 72s (Table 19). However, the Type 72 mines had only been buried for 90 days versus 368 for the TMA-5 and PMA-1A mines when these samples were collected, and the Type 72 mines were buried much deeper (burial depth was 15 cm to the top of the mine for Type 72, 8.5 cm for TMA-5, and 2 cm for PMA-1A mines).

The frequency of detection of ERCs in surface soils was similar for the TMA-5 and PMA-1A mines (29% for TMA-5s and 30% for PMA-1As). In both cases the most frequently detected analytes were 2-ADNT, 4-ADNT, and 2,4-DNT (Table 19). The patterns of de-

Table 19. Frequency of detection of ERCs in soil samples collected near buried mines in July 1999.

Mine type	*Soil samples collected**	*Number of detections Total soil samples (surface samples**)*				
		2,4-DNT	*2,4,6-TNT*	*1,3-DNB*	*2-ADNT*	*4-ADNT*
PMA-1A	40 (20)	20 (6)	18 (5)	19 (5)	17 (6)	20 (6)
PMA-2	1 (0)	1 (0)	1 (0)	0 (0)	0 (0)	0 (0)
TMA-5	70 (34)	28 (6)	25 (4)	21 (4)	31 (10)	32 (10)
Type 72	70 (33)	5 (1)	16 (2)	0 (0)	8 (0)	9 (0)

*Numbers inside parenthesis in the *Soil samples collected* column refer to the number of surface soil samples that were collected for a given mine type.
**Numbers inside parenthesis in the *Number of detections* columns refer to the number of surface soil samples in which ERCs were detected for a given mine type.

tection and the concentrations for ADNTs, 2,4-DNT, and 2,4,6-TNT in surface soils for the two TMA-5 mines are presented in Figure 7. Similar plots for the two PMA-1As are shown in Figure 8.

For the TMA-5s, surface ERCs remained heterogeneously distributed around their perimeters, with no detectable ERCs directly above them (Fig. 7). In most cases surface concentrations of the ADNTs were much greater than for 2,4-DNT or 2,4,6-TNT. Generally, when ERCs were detected in soil collected along an edge or at a corner of the mine, they were also detected in surface samples collected 7 cm away from that position. Concentrations of ERCs remained in the thousands of micrograms per kilogram under the mines, indicating that there appears to be no reduction in ERCs evolving from these mines, a year after burial. If anything, the

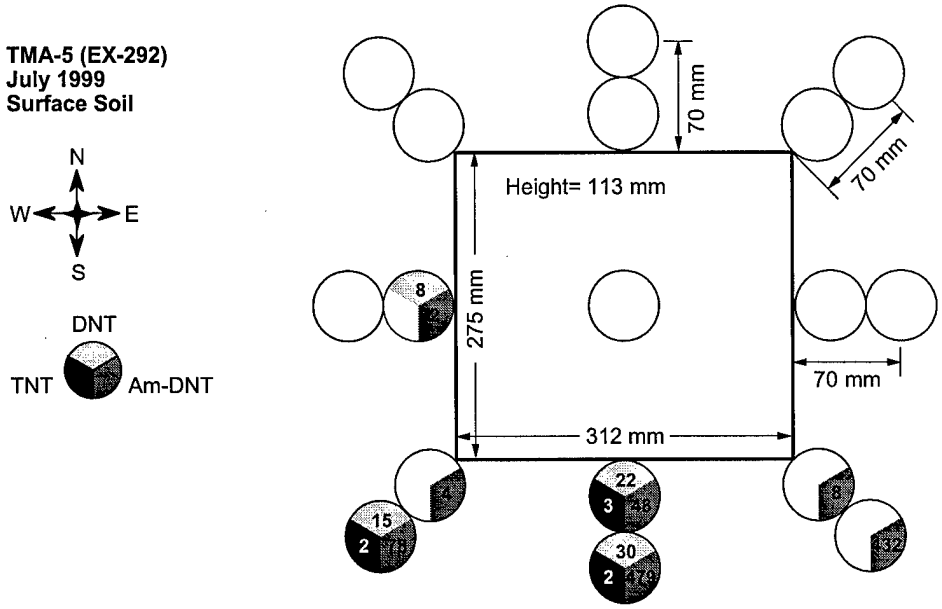

a. EX-292.

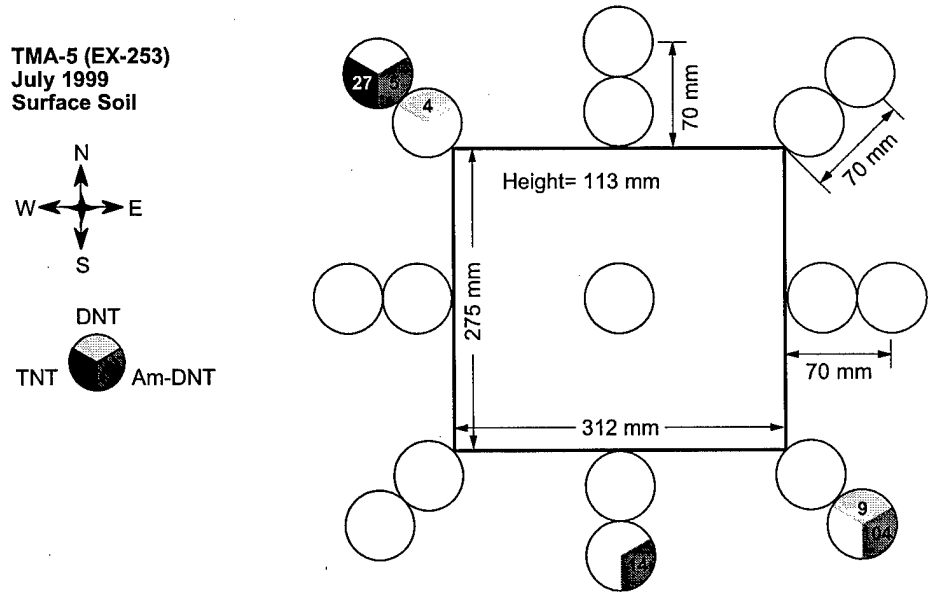

b. EX-253.

Figure 7. Locations of various ERCs detected in surface soil near buried TMA-5 land mines in July 1999.

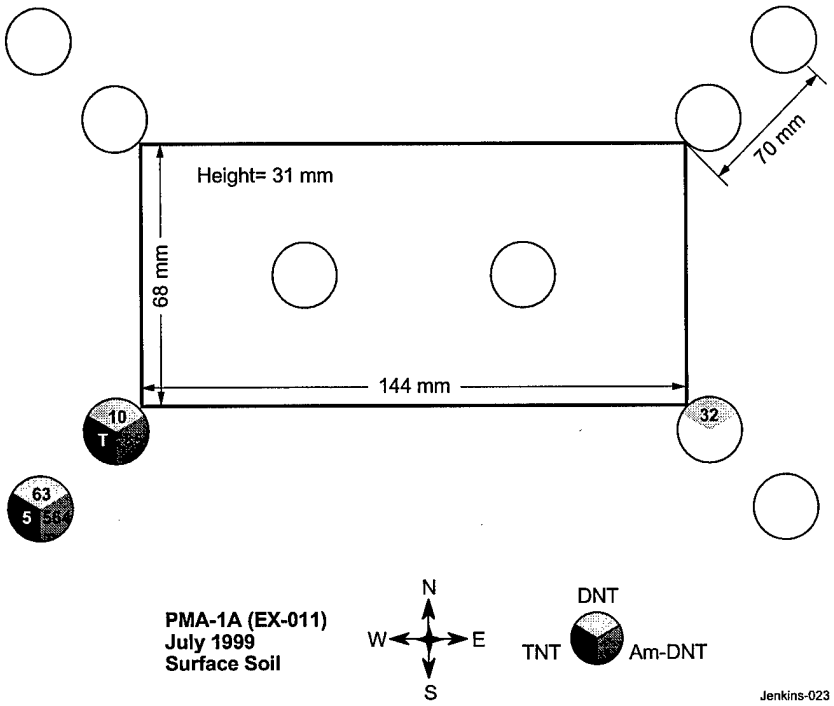

a. EX-011.

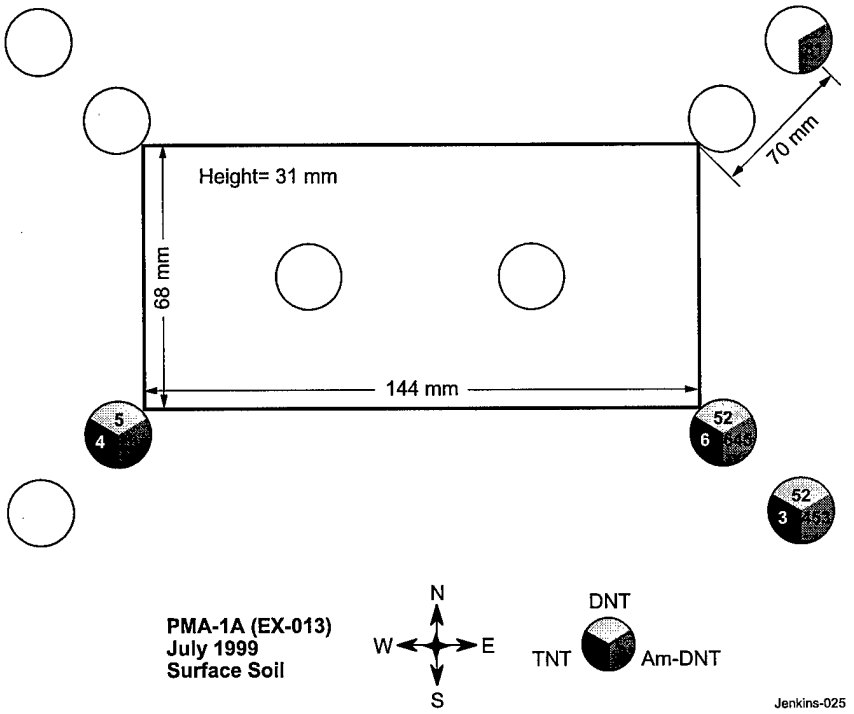

b. EX-013.

Figure 8. Locations of various ERCs detected in surface soil near buried PMA-1A land mines in July 1999.

to contents

concentrations under the mines may be increasing.

A similar distribution of ERCs was found in surface soils near PMA-1A mines (Fig. 8). No ERCs were detected directly above the mines, but ERCs were often detected around their perimeters. Here, again, when ERCs were detected in a specific direction along the edge of the mine, they were generally detected in samples collected 7 cm from the edge in that same direction as well. The analytes present at highest concentration were generally the 2-ADNT and 4-ADNT transformation products, followed by 2,4-DNT and 2,4,6-TNT. We did not specifically target 3-NA for the July samples (using a specific RP-HPLC analysis) and would, therefore, only have detected it if the concentrations were relatively high because of its poor response on the ECD detector.

July 1999 was the first time samples were collected near any of the second set of mines buried in April 1999. Soil samples were collected near two Type 72 antitank mines. ERCs were detected in 16 of the 70 soil samples, but in only 2 of the 33 surface soils. This could be attributable to a combination of deeper burial for these mines and the shorter burial period (90 days). Unlike the other two mine types, the analyte found most often for the Type 72 mines was 2,4,6-TNT, but the concentrations were quite low. RDX was also detected at low concentrations in soil samples collected under these two mines. This is reasonable, as RDX is a component of the main charge for Type 72 mines.

Soil samples collected in November 1999

In November 1999, 303 soil samples were collected. Analytical results for these samples are presented in Appendix E. A summary of the explosives-related compounds detected for each type of mine is presented in Table 20.

As usual, ERCs were most often detected near TMA-5 and PMA-1A mines. ERCs were detected in 30% of the surface samples near TMA-5 mines. The analytes detected most often for both types of mines continue to be 2-ADNT, 4-ADNT, and 2,4-DNT; 2,4,6-TNT was detected much more frequently in surface soils near TMA-5 mines (22%) than near PMA-1A mines (6%). For surface soils collected over the perimeter of the TMA-5 mines (Fig. 9), concentrations of 2-ADNT, 4-ADNT, and 2,4-DNT were generally less than 100 µg/kg, but occasionally concentrations above 100 µg/kg were detected. Concentrations for 2,4,6-TNT were usually less than 10 µg/kg. When ERCs were detected above the perimeter of the mine, the same types of ERC were often detected 7 cm away from the mine in the same direction. For surface samples collected directly above the mine, however, only 2,4,6-TNT was generally detectable, but at very low concentrations (less than 10 µg/kg). No 2-ADNT or 4-ADNT was detected in these samples collected directly above the mine.

For one TMA-5 mine (EX-261), surface samples were also collected 20 cm off its corners (Fig. 9b). ERCs were detected in three of these four samples. For two of these samples, the concentrations of 2-ADNT, 4-ADNT, 2,4,6-TNT, and 2,4-DNT were all less than 10 µg/kg. In the other, the concentrations of 2-ADNT, 4-ADNT, and 2,4-DNT were 586, 685, and 248 µg/kg, respectively. These results indicate that ERCs are diffusing away from the mines and the zone where they can potentially be detected is considerably larger than the footprint of the mine itself. The fact that greater concentrations of ERCs are found 7 and 20 cm away from the mine, rather than directly over the mine, indicates that this diffusion must be occurring through the subsurface soil, rather than the alternative, where the signature penetrates the surface directly above the

Table 20. Frequency of detection of ERCs in soil samples collected near buried mines in November 1999.

Mine type	Soil samples collected*	Number of detections Total soil samples (surface samples**)					
		2,4-DNT	2,4,6-TNT	1,3-DNB	2-ADNT	4-ADNT	RDX
PMA-1A	57 (36)	33 (14)	5 (2)	26 (9)	31 (14)	26 (11)	3 (1)
PMA-2	45 (26)	4 (0)	1 (0)	3 (0)	2 (0)	2 (0)	0 (0)
TMA-5	84 (46)	36 (13)	30 (10)	13 (1)	37 (14)	37 (14)	18 (5)
TMM-1	78 (42)	11 (0)	5 (2)	4 (1)	9 (1)	11 (1)	6 (0)
Type 72	39 (21)	3 (0)	3 (0)	0 (0)	4 (1)	5 (3)	5 (1)

*Numbers inside parenthesis in the *Soil samples collected* column refer to the number of surface soil samples that were collected for a given mine type.
**Numbers inside parenthesis in the *Number of detections* columns refer to the number of surface soil samples in which explosives related analytes were detected for a given mine type.

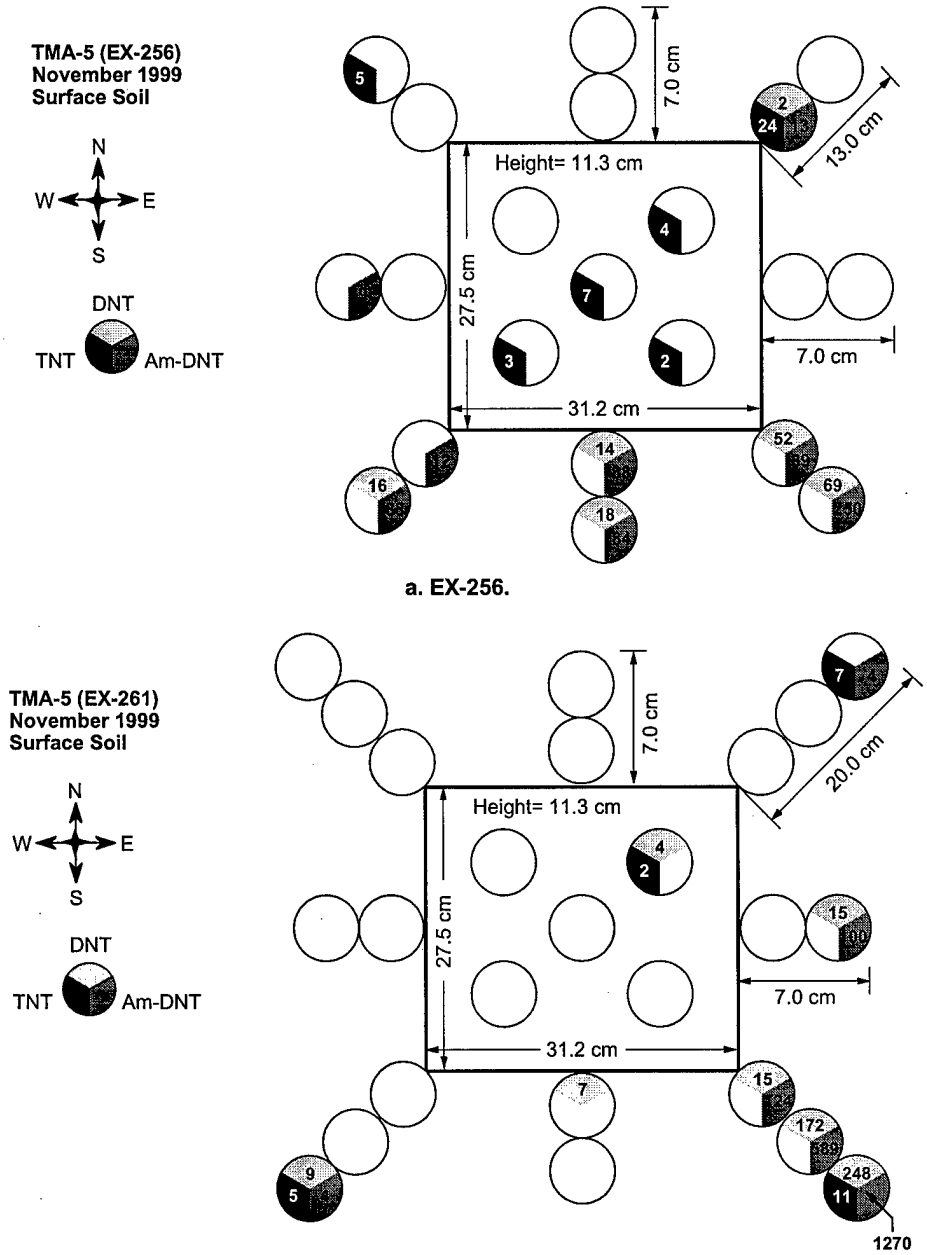

Figure 9. Locations of various ERCs detected in surface soil near buried TMA-5 land mines in November 1999.

perimeter of the mine and diffuses along the surface. Additional surface sampling needs to be done to better define the extent of surface contamination for the TMA-5 mines.

1,3-DNB was only detected in one surface sample near TMA-5 mines, and, in that sample, the concentrations of 2-ADNT and 4-ADNT were greater than 500 µg/kg. A subset of soil extracts near the TMA-5 mines was selected and analyzed using HPLC to see whether 3-NA was accumulating because of transformation of 1,3-DNB. Included in this set were 11 surface samples and the results of these HPLC analyses are provided at the end of Appendix E. No 3-NA was detectable in any of these surface samples near the TMA-5 mines, al-

though it was detected in a number of subsurface samples at concentrations generally under 100 µg/kg.

For the PMA-1A mines, 39% of the surface samples had detectable levels of 2-ADNT, 4-ADNT, or 2,4-DNT, with maximum concentrations of 600, 459, and 227 µg/kg, respectively. When detectable, concentrations of these three analytes in surface soils were often near 50 µg/kg. 2,4,6-TNT was only detected in two surface samples and then only at a maximum concentration of 4 µg/kg (Fig. 10).

ERCs were detected in half of the surface samples collected 7 cm from the edges of both of the PMA-1A mines that were sampled. For one of these mines, surface soils were also collected at distances of 20 cm off the four corners of the mine (Fig. 10). ERCs were only detectable in one of these samples. Once again, the surface area where signatures are available for detection appears to be greater than the footprint of the mine.

Compared to TMA-5s, the frequency of detection of 1,3-DNB was much greater for soils collected near the PMA-1A mines. Concentrations of 1,3-DNB were often one-half to one-third that found for 2,4-DNT. The greater detection of 1,3-DNB in soils near the PMA-1A mines is consistent with the higher surface concentration (Table 2) and flux (Table 3) of 1,3-DNB for this mine relative to the other types of mines studied.

A set of 13 PMA-1A surface samples that had been identified with ERCs by GC-ECD was selected for HPLC analysis to determine the presence or absence of 3-NA. These HPLC analyses show that 3-NA is detectable in nearly every sample; however, we were unable to confirm the identity using a second HPLC column. At present, we are attempting to confirm the presence of 3-NA in these samples using GC-NPD (nitrogen phosphorus detector).

Of the 45 soil samples collected near the small PMA-2 mines, only four had detectable ERCs. No ERCs were detected in any of the 26 surface samples. Even for soil samples collected directly under the mines, the concentrations of ERCs were low; the highest concentration was for 2,4-DNT (70 µg/kg). No 2,4,6-TNT was detected in these samples. Similarly, ERCs were detected in 11 of the 78 soils samples collected near the metallic-cased TMM-1 mines, but ERCs were detected in only 2 of the 42 surface soils. Clearly, it will be very difficult to detect TMM-1 and PMA-2 mines using chemical detection, compared to the PMA-1A and TMA-5 mines, where ERCs are much more prevalent in the surface soils.

Only 10 of the 39 soil samples collected near the one Type 72 antitank mine that we sampled had detectable levels of ERCs. 2,4,6-TNT and 2,4-DNT were only

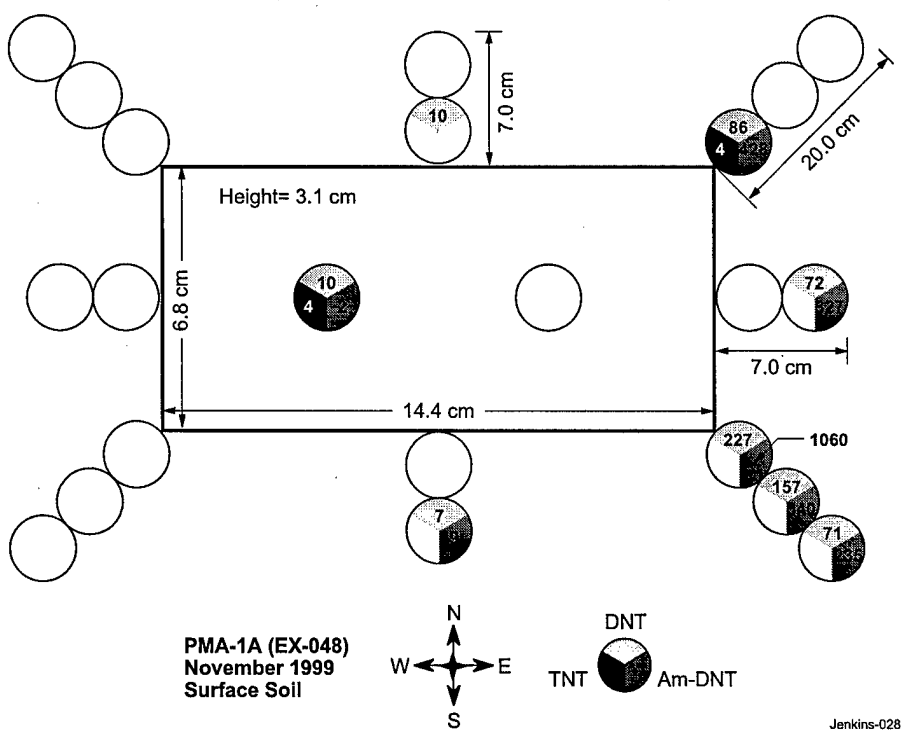

Figure 10. Locations of various ERCs detected in surface soil near buried PMA-1A land mine EX-048 in November 1999.

to contents

found in samples collected under the mine. For the surface soils, only 3 of the 21 surface soil samples had detectable ERCs. The most often detected analytes for the Type 72 mine were 4-ADNT and RDX. Except for one surface soil, RDX was only present in four samples collected under the mines. Finding RDX in soils near the Type 72 mines is, however, consistent with the type of high explosive present in this mine (50%TNT, 50% RDX) and the very high concentration of RDX present on the surfaces (74 ng/cm^2) of Type 72 mines (Table 2) when they were buried.

Detection frequency for major signature chemicals in soils near TMA-5 and PMA-1A mines as a function of time after burial

If vapor sensing is a viable concept for detection of buried land mines, the ERCs must persist in the vicinity of these mines for long periods. Thus far, we have presented the frequency of detection of individual ERCs in soils for each sampling time (Tables 16–20), but have not considered any long-term trend in these data. To look at this question, we prepared bar graphs of the detection frequency of 2,4-DNT, 2-ADNT,* and 2,4,6-TNT in soils near the TMA-5 (Fig. 11) and PMA-1A mines (Fig. 12), as a function of time after burial.

For the soils near the TMA-5 mines, the detection frequencies for 2,4-DNT (Fig. 11b) and 2-ADNT (Fig. 11b) appear to be increasing with time, although the results from November 1998 were high for both signature chemicals, particularly in the surface soils. The detection frequency for 2,4,6-TNT (Fig. 11c) shows a similar trend, with a noticeable spike in April 1999 for both total soils and surface soils. With only five data points, our conclusions in this regard must be guarded, but clearly there is no evidence to suggest that the

*4-ADNT was not plotted because whenever 2-ADNT was present, 4-ADNT was also present at very similar concentrations.

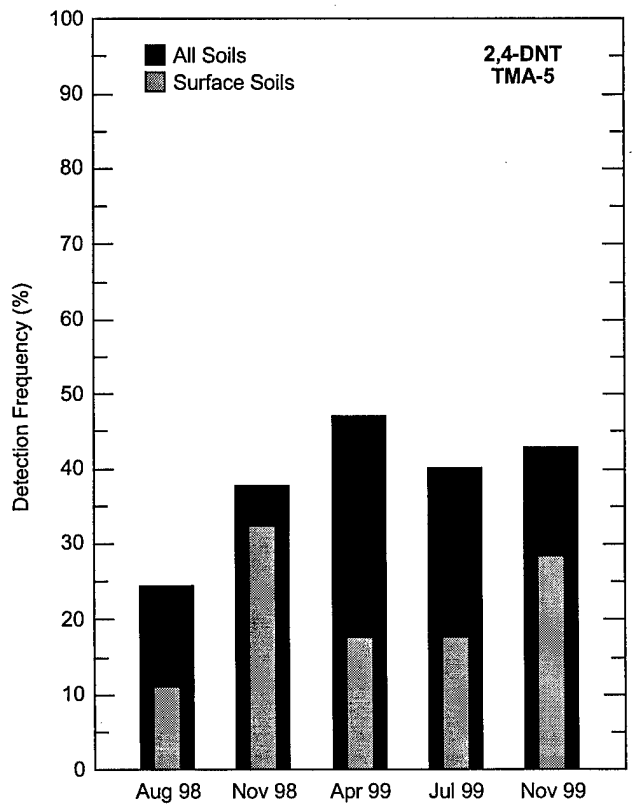

a. 2,4-dinitrotoluene.

Figure 11. Detection frequency for ERCs in soil samples collected near buried TMA-5 land mines.

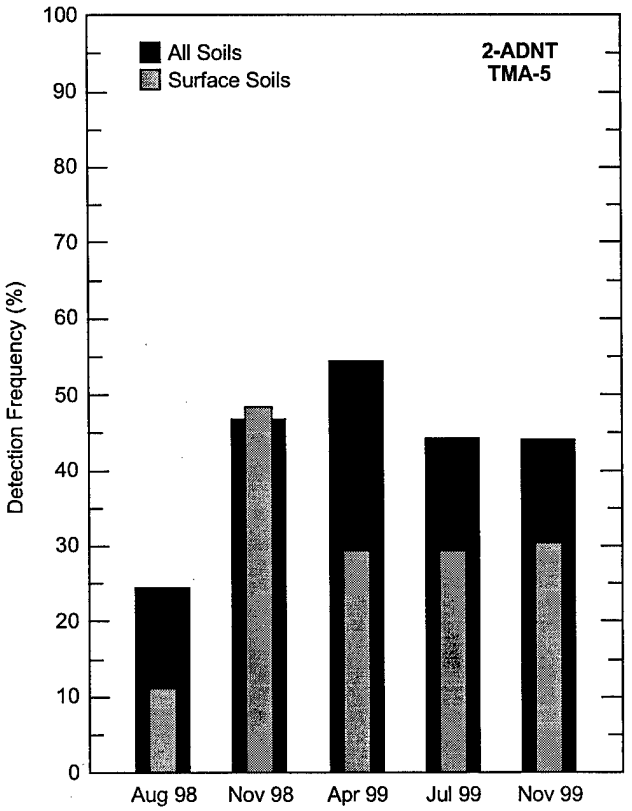

b. 2-amino-4,6-dinitrotoluene.

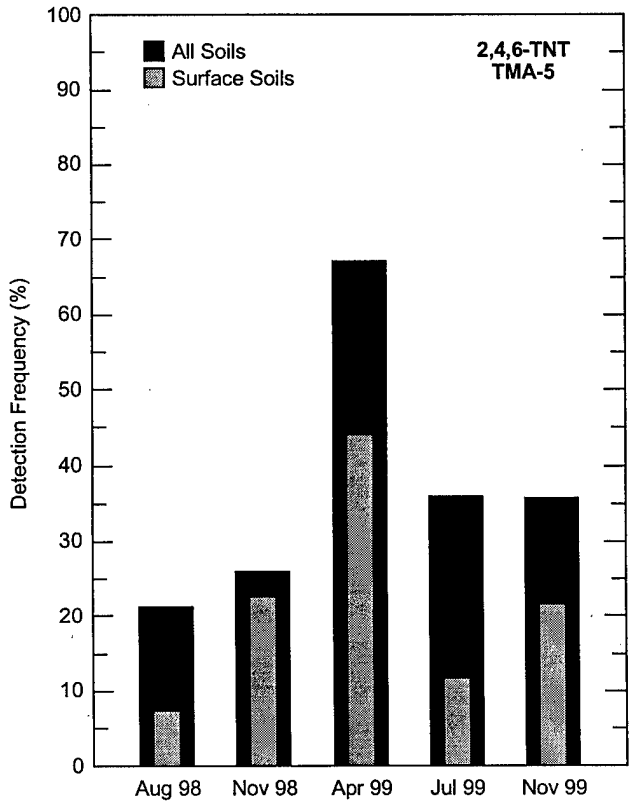

c. 2,4,6-trinitrotoluene.

Figure 11 *(cont'd)*. Detection frequency for ERCs in soil samples collected near buried TMA-5 land mines.

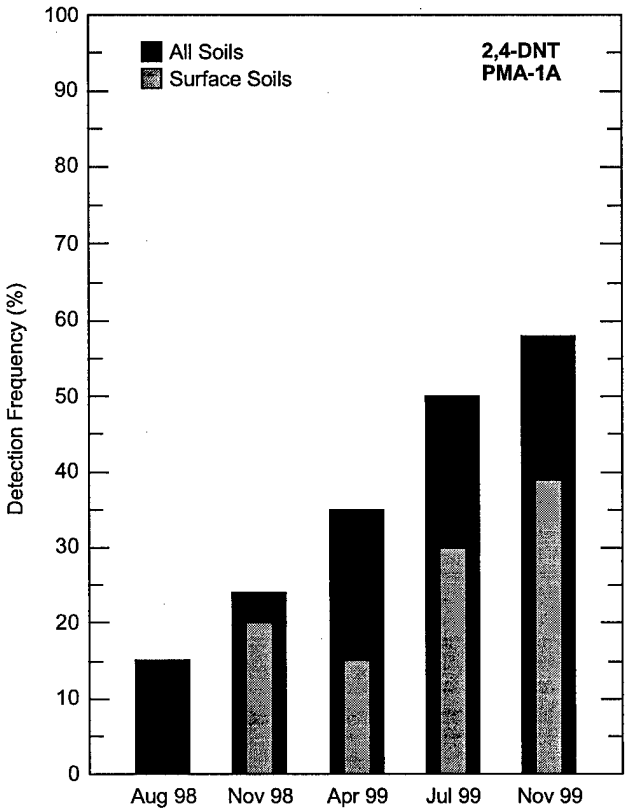

a. 2,4-dinitrotoluene.

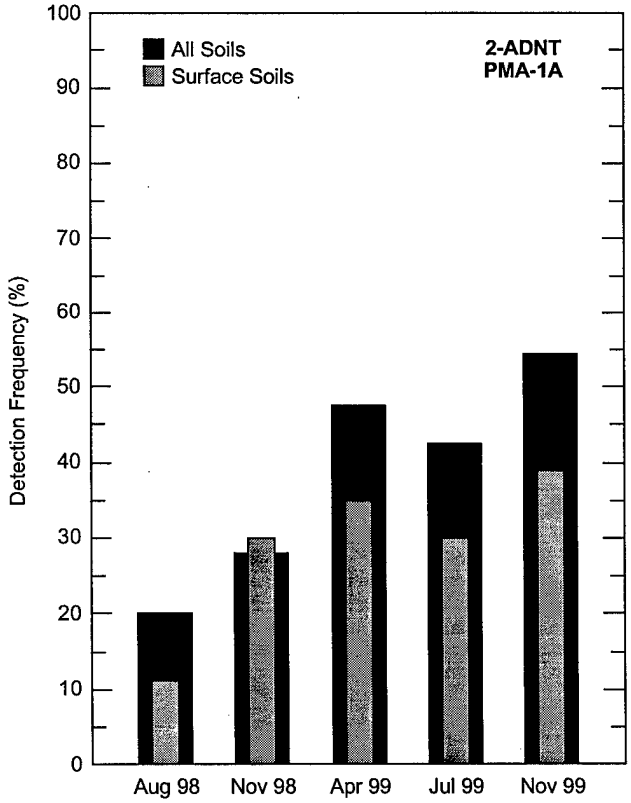

b. 2-amino-4,6-dinitrotoluene.

Figure 12. Detection frequency for ERCs in soil samples collected near buried PMA-1A land mines.

to contents

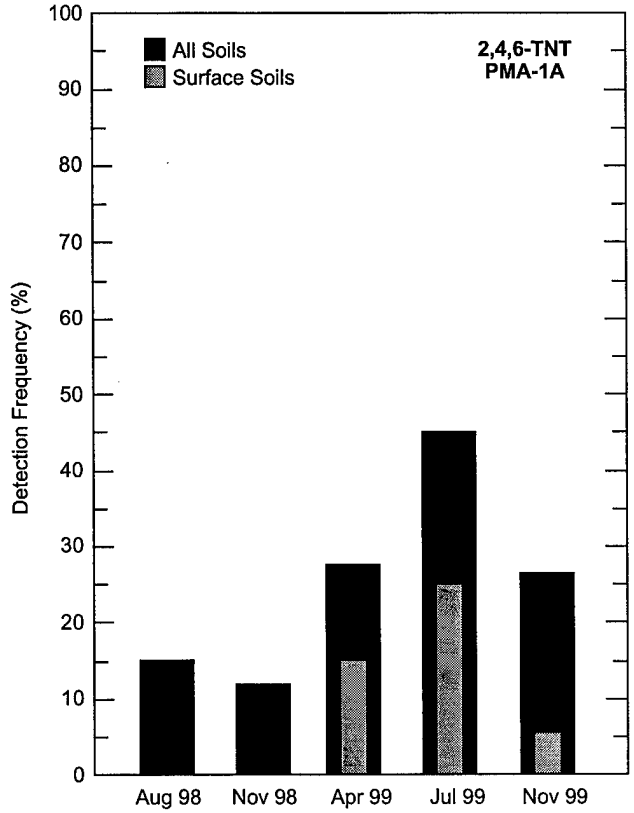

c. 2,4,6-trinitrotoluene.

Figure 12 *(cont'd)*. Detection frequency for ERCs in soil samples collected near buried PMA-1A land mines.

detection frequencies are declining with time for soil near the TMA-5 mines.

The results for the PMA-1A mines appears to be even more convincing, particularly for the detection frequency of 2,4-DNT (Fig. 12a) and 2-ADNT (Fig. 12b), which shows a consistent increase with time from August 1998 through November 1999. The trend for 2,4,6-TNT (Fig. 12c) is less compelling, but the median concentrations found for 2,4,6-TNT are much lower than for 2,4-DNT and 2-ADNT and, hence, the detection frequencies may be more influenced by the detection limit for 2,4,6-TNT than for the other two analytes that are often found at higher concentrations.

These results suggest that ERCs for the TMA-5 and PMA-1A mines will be long lasting in the soil. This is important for countermine applications where the mines may have been in the ground for many years. Because the detection frequencies for the TMM-1 and PMA-2 mines have been so low, we are unable to speculate on the long-term detection probability for these two mines based on the results of the soil analyses.

Remaining surface contamination levels on buried mines

During the July and November 1999 soil samplings, the mines where soil samples were collected were removed from the ground and the top and bottom surfaces were sampled to estimate the levels of surface contamination that remained after burial. The results, along with the estimates of surface contamination existing before burial (Leggett et al. 2000) for each mine, are presented in Table 21.

For the two metal-cased TMM-1 mines, EX-319 and 324, the surface contamination that was originally present was almost totally absent after burial for 472 days (Table 21). Only a very small concentration of 2,4,6-TNT (0.368 ng/cm^2) remained on the bottom surface of EX-319. Otherwise, the surface concentrations were all below detection. This result is consistent with the results for the soil samples that were collected under the TMM-1 mines, which showed that the concentrations of ERCs were always less than 10 µg/kg, except for three soil samples where 2,4-DNT

Table 21. Concentration of analytes found on mine surfaces after being buried for periods up to 472 days.

Mine ID	Mine type	Surface area (cm^2)	Days buried	Mine surface concentration (ng/cm^2)								
				2,6-DNT	1,3-DNB	2,4-DNT	1,2-DNB	TNT	TNB	4-ADNT	2-ADNT	RDX
EX-319T*	TMM-1	2240	472									
EX-319B	TMM-1		472					0.368				
Pre-burial	1998			0.492	3.48	18.7	0.183	64.6				
EX-324T	TMM-1											
EX-324B	TMM-1											
Pre-burial	1998			0.288	15.3	10.6	0.977	10.2				
EX-011T	PMA-1A	345	368		0.89	0.66		0.44				
EX-011B	PMA-1A		368		0.43	0.40		0.28				
Pre-burial	1998				10.1	4.22		4.09				
EX-013 T	PMA-1A		368		0.96	0.79		0.25				
EX-013 B	PMA-1A		368		0.47	0.72		0.89				
Pre-burial	1998				8.44	4.00		2.70				
EX-048T	PMA-1A		472	0.048	0.608	1.57	0.199	2.02	1.43	1.05	1.27	
EX-048B	PMA-1A		472	0.189	0.422	0.564	0.069	0.955	1.65	1.51	1.68	0.966
Pre-burial	1998				3.39	1.63	0.427	1.56	0.795			
EX-051T	PMA-1A		472		1.41	1.18	0.224	1.12				
EX-051B	PMA-1A		472		44.4	35.1	5.26	67.6	8.18	4.09	6.82	
Pre-burial	1998				9.620	7.74	1.44	7.24	1.04			
EX-111 T	PMA-2	118	368		nd	0.69		0.44				
EX-111 B	PMA-2		368		nd	0.41		0.15				
Pre-burial	1998				0.802	0.774		1.76				
EX-117T	PMA-2		472			0.892		0.642				
EX-117B	PMA-2		472	0.180	0.259	0.489		0.710				
Pre-burial	1998				0.952	0.582	0.073	1.90				1.44
EX-144T	PMA-2		472	0.391		0.994						
EX-144B	PMA-2		472			0.222						
Pre-burial	1998				0.944	0.806	0.076	1.900				1.610
EX-253 T	TMA-5	2720	368		0.66	3.8		7.3				
EX-253 B	TMA-5		368		39	57		271				
Pre-burial	1998				1.82	3.47		15.0				
EX-292 T	TMA-5		368		2.1	6.6		6.6				
EX-292 B	TMA-5		368		19	60		221				
Pre-burial	1998				2.85	5.15		23.5				
EX-256T	TMA-5		472	0.043	0.435	1.89	0.159	1.06	0.602			
EX-256B	TMA-5		472	1.99	12.5	60.9	2.85	87.6	34.9	5.49	7.11	1.37
Pre-burial	1998			0.173	2.49	5.33	0.192	125.8	1.02			
EX-261T	TMA-5		472	0.128	1.02	4.48	0.324	2.30	1.24			
EX-261B	TMA-5		472	1.28	10.2	29.0	1.72	22.7	5.71	3.66	3.65	0.184
Pre-burial	1998			0.118	4.32	5.07	0.333	10.2	1.26			
EX-760 T	Type 72	1990	97		nd	1.2		7.9				2.7
EX-760 B	Type 72		97		nd	2.6		118				11.6
Pre-burial	1999					2.59		>17.0				19.8
EX-767 T	Type 72		97		nd	1.0		28				1.7
EX-767 B	Type 72		97		nd	1.2		55				4.0
Pre-burial	1999					0.85		>17.0				9.9
EX-764T	Type 72		201	0.378		0.245		2.73	4.79			1.42
EX-764B	Type 72		201	0.252		0.188		2.47	4.53			1.21
Pre-burial	1999†					3.01		17.0		0.778	1.06	19.7

*T and B refer to the top and bottom of the mines respectively.

† Initial surface sampling for the Type 72 mines was not conducted according to the proper protocol and hence the results have a higher degree of uncertainty than for the other mines.

to contents

concentrations were 13.6, 69.0, and 17.5 µg/kg, respectively. The initial contamination that was present on the metal-cased TMM-1 mines has been transferred to the surrounding environment over the 472 days of burial and the metal case is an effective barrier to prevent further surface soil contamination. Thus, from these results, it appears unlikely that the ERC levels in soils near these mines will increase with time as the mines remain in the ground.

Surface concentrations of 2,4-DNT on the PMA-2 mines after burial are similar to results before burial, but the concentration of 2,4,6-TNT has been reduced by about 66% on mine EX-111, about 64% on mine EX-117, and to levels that were below detection on EX-144. It appears that the residual surface concentration of 2,4-DNT is higher on the top of the three PMA-2 mines than on the bottom after burial. This could be attributable to a continued flux of this signature evolving around the fuse well that was threaded with a plastic plug instead of an actual fuse. But this flux may be less than from a PMA-2 with a real fuse installed. Comments from one person experienced in mine detection indicate that the fuse well seal is susceptible to weathering and has been observed to be ruptured on mines that have been detected and removed from the ground. Visually, the seals for these two mines were intact and, hence, the flux may be atypically low compared with real mines that have been buried for the same length of time.

For the four plastic-cased TMA-5 mines, the surface contamination is comparable to estimates made before burial (Table 21). Each pre-burial value is a mean for the mine that was determined from surface swipes collected from both the top and bottom surfaces. For the samples taken after burial, the swipes from the top and bottom were kept separate. For all four TMA-5 mines, the contamination on the bottom surfaces was generally at least an order of magnitude higher than on the top surfaces. This may be ascribable to downward percolating water that washes contamination from the top and sides of the mine and deposits it under the mine. Alternatively, it could be attributable to water leaking from the four holes present in the bottom of the TMA-5 mines or moisture trapped underneath the mine, resulting in a water dominated flux rate.* The holes in the bottom of the mine allow water to contact a waxlike liner within the mine that holds the explosive in place. Analysis of this waxlike material at Sandia National Laboratory indicated that it contained large concentrations of TNT.† Future sampling should be conducted to determine which of these possibilities is correct. Nevertheless, surfaces of the TMA-5 mines continue to be highly contaminated with ERCs after 368 and 472 days of burial.

Surface sampling results for the PMA-1A mines are less consistent (Table 21). For mines EX-011 and EX-013, which were sampled after being buried for 368 days, the top and bottom have similar concentrations of 1,3-DNB, 2,4-DNT, and 2,4,6-TNT, all of which are about an order of magnitude lower than when the mines were buried. Results for EX-048 sampled after 472 days are a little different; the top and bottom concentrations are within a factor of 3 of each other for all analytes, and, except for 1,3-DNB, the concentrations are comparable to estimates made before burial. Analytical results for EX-051 are more like those found for the TMA-5 mines, where the bottom surface has a much higher concentration than the top, and the pre-burial estimates are intermediate between the two. This variability could be caused by differences in the local microenvironment where these mines are buried. It is important to note, though, that the surfaces of the PMA-1A mines remain contaminated with ERCs 368 and 472 days after they were buried. Thus, it appears that, like the TMA-5 mines, ERCs will be available for detection for many years after burial.

The results for the three Type 72 mines indicate that, after 97 days of burial, the surface concentrations were similar to those measured when the mines were buried. After 201 days, the concentrations of the three major analytes (2,4-DNT, 2,4,6-TNT, and RDX) remaining on EX-464 were lower than initially measured by about an order of magnitude (Table 21). Whether a steady state has been achieved or the surface concentration will continue to decline is uncertain.

Soil–air partition coefficients for soils collected at the Fort Leonard Wood research minefield

Soil–air partition coefficients ($K_{s/a}$) for nine explosives-related chemicals on 16 Fort Leonard Wood soils are presented in Table 22. These $K_{s/a}$ values were determined from 14 soil samples collected near two TMA-5 mines and two near PMA-1A mines in April 1999. These soils were not fortified with these chemicals, rather they became contaminated because of their proximity to the TMA-5 mines.

Depending on which chemicals were present in a given soil, up to 15 individual $K_{s/a}$ values were obtained for a given chemical. Median $K_{s/a}$ values for the most commonly encountered ERC are 1.04×10^5 mL-air/g-soil for 2,4-DNT, 4.48×10^6 mL-air/g-soil for TNT, 1.55×10^6 mL-air/g-soil for 4-ADNT, and 1.89×10^6 mL-air/g-soil for 2-ADNT.

If we assume that there is a boundary layer of air

*Personal communication with D. Leggett, CRREL, 2000.

†Personal communication with P. Rodacy, Sandia National Laboratories, 1999.

Table 22. Partition coefficients for selected Fort Leonard Wood soils removed from under and around buried mines in April and November 1999.

Mine ID	Mine type	Sample location	Depth (cm)	% moisture wet weight	Soil /air partition coefficients ($K_{s/a}$) (mL-air/g-soil)								
					1,3-DNB	2,6-DNT	2,5-DNT	2,4-DNT	3,5-DNT	3,4-DNT	TNT	4-Am-DNT	2-Am-DNT
EX-274	TMA-5	SE	0-5	14				6.99×10^6	3.27×10^5			8.32×10^6	2.85×10^6
EX-274	TMA-5	SE	5-10	17		1.54×10^5		8.12×10^5	6.21×10^5		3.09×10^7	5.82×10^6	
EX-274	TMA-5	SE	10-15	19	7.08×10^5	1.95×10^5	7.95×10^5	2.96×10^5	4.12×10^5	1.57×10^5	2.92×10^7	1.08×10^7	9.21×10^6
EX-274	TMA-5	Under		18	1.05×10^5		1.67×10^5	8.58×10^4	1.20×10^5	1.36×10^7	3.03×10^6	1.38×10^6	1.89×10^6
EX-274	TMA-5	Under		16	1.45×10^5		2.58×10^5	9.94×10^4	1.29×10^5		4.48×10^6	1.57×10^6	2.17×10^6
EX-274	TMA-5	Under		16	1.57×10^5		2.78×10^6	1.05×10^5	1.36×10^5	1.11×10^6	4.64×10^6	1.53×10^6	2.03×10^6
EX-275	TMA-5	NW	0-5	10		2.65×10^4		2.04×10^5					3.01×10^5
EX-275	TMA-5	NW	5-10	17	2.79×10^6	4.09×10^5		1.29×10^6	1.52×10^6		2.49×10^7	3.15×10^7	1.47×10^7
EX-275	TMA-5	NW	10-15	16	1.17×10^5		4.75×10^5	5.48×10^4	8.30×10^4		5.86×10^6	1.23×10^6	1.61×10^6
EX-275	TMA-5	Under		15	5.34×10^4		9.42×10^4	3.93×10^4	5.81×10^4		2.47×10^6	1.55×10^6	1.66×10^6
EX-275	TMA-5	Under		15	1.01×10^5		1.11×10^5	4.12×10^4	6.18×10^4		3.49×10^6	1.07×10^6	1.00×10^6
EX-275	TMA-5	Under		17	5.66×10^4		9.13×10^4	4.09×10^4	6.09×10^4		1.68×10^6	4.97×10^5	6.59×10^5
EX-261	TMA-5	Surface										1.27×10^6	5.73×10^6
EX-261	TMA-5	Under			6.05×10^4	9.87×10^4		1.02×10^5			4.39×10^6	2.11×10^6	1.59×10^6
EX048	PMA-1A	Surface									1.31×10^6	3.74×10^6	2.17×10^6
EX048	PMA-1A	Under			8.11×10^5			1.85×10^6			8.24×10^6	8.24×10^5	6.94×10^5
				Mean	4.64×10^5	1.77×10^5	5.97×10^5	8.58×10^5	3.21×10^5	4.95×10^6	9.59×10^6	4.88×10^6	3.22×10^6
				Standard deviation	8.18×10^5	1.44×10^5	9.15×10^5	1.85×10^6	4.37×10^5	7.49×10^6	1.09×10^7	7.95×10^6	3.91×10^6
				Median	1.17×10^5	1.54×10^5	2.13×10^5	1.04×10^5	1.29×10^5	1.11×10^6	4.48×10^6	1.55×10^6	1.89×10^6

to contents

above the soil surface in which equilibrium between the surface soil and that air layer is established, for an equal concentration of 2,4-DNT and 2,4,6-TNT in the soil, there would be a 43 times higher concentration of 2,4-DNT in the air than 2,4,6-TNT. Similarly, for the two ADNTs, there would be 15 times higher 2,4-DNT than 4-ADNT, and 18 times higher 2,4-DNT than 2-ADNT. Since the surface soil at the Fort Leonard Wood site generally contains higher levels of 2,4-DNT and the ADNTs than 2,4,6-TNT, the vapor evolving into the boundary layer above the mines and providing the chemical vapor signature for the mines should largely be 2,4-DNT, 4-ADNT, and 2-ADNT, with only a minor contribution from 2,4,6-TNT and other ERCs.

CONCLUSIONS AND IMPLICATIONS FOR CHEMICAL DETECTION OF LAND MINES

It can be argued that the source of any ERCs that are evolving into the air above buried land mines is surface soil that is contaminated with trace levels of these ERCs. If that is true, the results of these soil analyses have enormous implications for our ability to detect buried land mines using ERCs.

Clearly, the results of over 1000 soil analyses show that the concentrations of ERCs present in soils near buried mines vary tremendously, depending on the specific type of mine. Of the mines we studied, the plastic-cased TMA-5 antitank mine produced the largest concentrations of ERCs in the soils, followed by the PMA-1A antipersonnel mine. We observed very little accumulation of ERCs around the metal-cased TMM-1 antitank mine or the small PMA-2 antipersonnel mine, and it appears that these mines would be very difficult to find using chemical sensors based on vapor detection. We have only preliminary information on the types and concentrations of ERCs originating from Type 72 antitank mines, but it appears that the same suite of compounds, with the addition of RDX, will evolve into the soil, as found for the TMA-5 and PMA-1A mines, but the resulting soil concentrations may be lower.

Surface contamination on TMM-1 mines that had been in the ground for over a year was largely gone. Apparently, leakage of ERCs from this metal-cased mine was minimal and does not contaminate the surface of the mine, at least not the areas that were swiped. This finding is consistent with our failure to detect significant ERCs in the soil near the TMM-1 mines after they had been in the ground for several months. Comparing the TMM-1 with a similar sized plastic-cased mine (TMA-5) tells us that the metal casing is a much more effective barrier to the release of signatures than is the plastic casing. Hence, using vapor signatures to detect metal mines will be much more difficult to do than using them to detect plastic ones.

The overall soil sampling program at the Fort Leonard Wood minefield detected 20 individual ERCs in one or more soil samples collected near the buried mines. This includes a number of isomers of trinitrotoluene, dinitrotoluene, and dinitrobenzene, various amino transformation products of the trinitro- and dinitrotoluenes and benzenes, 1,3,5-TNB, and RDX. Of these, the chemicals that were most often detected in surface soils above buried mines were 2-ADNT, 4-ADNT, and 2,4-DNT. Even though 2,4,6-TNT accounts for greater than 98% of the high explosive in a number of the land mines at the Fort Leonard Wood minefield, it was detected in surface soils less often and at lower concentration than 2,4-DNT and the two ADNTs. Both 2,4,6-TNT and 1,3-DNB are important components of the flux from many of these mines (George et al. 1999), but these two chemicals do not accumulate in the soil to the same degree as does 2,4-DNT. The difference appears to be attributable to the much greater environmental stability of 2,4-DNT compared to 2,4,6-TNT and 1,3-DNB (Miyares and Jenkins, in press). The transformation of 2,4,6-TNT accounts for the presence of the two ADNTs and they seem to have a much greater environmental persistence than 2,4,6-TNT. Likewise, 1,3-DNB is transforming to 3-NA; however, 3-NA does not appear to be accumulating to the same degree as the ADNTs, although 3-NA was only targeted in two of the five sampling episodes. This is probably caused by a faster rate of further reaction for 3-NA, in which the amine function is much more basic than in the ADNTs, owing to the presence of only one nitro group on the aromatic ring, compared with two for the ADNTs. Increased basisity probably causes a more rapid reaction with soil organic matter that is analogous to that shown to occur for the ADNTs (Thorne and Leggett 1997, Pennington et al. 1999).

The distribution of ERCs in the surface soils near buried mines is spatially heterogeneous. For example, excluding the initial sampling, ERCs were detected in 37% of the surface soils samples collected near TMA-5 mines and in 36% of the surface soils collected near PMA-1A mines. ERCs were most often found in a discontinuous halo around the perimeter of the mines, with little or no signature being detected directly over their centers. Analytes were detected in some surface soils collected 20 cm away from the perimeters of the mines, which was as far away from the mines as samples have been collected thus far.

While ERCs are also very heterogeneously distributed in the subsoil, their concentrations decline with distance from the mine. For example, soil concentrations of 873, 5480, 3430, 2802, and 524 μg/kg were

Table 23. Example of concentrations (µg/kg) of ERCs in soil as function of depth (soil samples collected southeast of TMA-5 mine [EX-256], November 1999).

Chemical	*Under mine*	*10–15 cm*	*5–10 cm*	*0–5 cm*	*Surface*
2,4,6-TNT	873	8	10	<d*	<d
2,4-DNT	5480	150	17	6	52
2-ADNT	3428	207	28	14	48
4-ADNT	2802	163	29	14	41
1,3-DNB	524	<d	<d	<d	<d

*Below detection.

obtained for soil collected under TMA-5 EX-256 for 2,4,6-TNT, 2,4-DNT, 2-ADNT, 4-ADNT, and 1,3-DNB, respectively, when it was sampled in November 1999 (Table 23). Concentrations rapidly decline for all five chemicals with decreasing depths and 2,4,6-TNT and 1,3-DNB become undetectable at the surface. Surface concentrations for 2,4-DNT, 2-ADNT, and 4-ADNT were 52, 48, and 41 µg/kg, respectively, for this example.

Because it is the surface soil concentrations that are relevant for chemical detection of land mines, we summarized the results for analyses of surface soils collected near TMA-5 and PMA-1A mines (Table 24). Out of 172 samples of surface soil collected near TMA-5 mines, 33 had detectable levels of 2,4,6-TNT, 37 had detectable 2,4-DNT, and 48 had detectable levels of 2-ADNT and 4-ADNT. Mean concentrations for these four chemicals varied from 4.2 µg/kg for 2,4,6-TNT to 62 µg/kg for 2-ADNT. The standard deviation associated with each mean is larger than the mean in each case, however, indicating that the distributions are non-normal. Thus, the median values are also presented and provide a better representative value for these distributions than the means. The median values for 2,4,6-TNT, 2,4-DNT, 2-ADNT, and 4-ADNT in surface soils near TMA-5 mines are 4, 16, 17, and 17 µg/kg, respectively.

Similarly, we summarized the results of analysis of surface soils collected near PMA-1A mines (Table 24b). Out of 95 samples of surface soil collected near PMA-1A mines, 10 had detectable levels of 2,4,6-TNT, 25 had detectable 2,4-DNT, 27 had detectable 2-ADNT, and 31 had detectable levels of 4-ADNT. We computed the maximum, mean, standard deviation, and median for each chemical, and, like the results for the TMA-5, the distributions were non-normal. The median concentrations for 2,4,6-TNT, 2,4-DNT, 2-ADNT, and 4-ADNT were 4, 32, 44, and 44 µg/kg, respectively. While the median value for 2,4,6-TNT was the same as found

Table 24. Statistical analysis of analytical results from surface soils collected near mines in August 1998 and April, July, November 1999.

			Concentration (µg/kg)		
Chemical	*Analyses*	*Detections*	*Max.*	*Mean*	*Median*
		a. TMA-5			
2,4,6-TNT	172	33	43.6	7.5 ± 9.7	4
2,4-DNT	172	37	248*	34.5 ± 50.4	16
2-ADNT	172	48	685	62.0 ± 114	17
4-ADNT	172	48	586	60.0 ± 99.0	17
		b. PMA-1A			
2,4,6-TNT	95	10	2.4	4.5 ± 3.1	4
2,4-DNT	95	25	227	7.7 ± 52.7	32
2-ADNT	95	27	600	109 ± 143	44
4-ADNT	95	31	459	112 ± 122	44

*One value of 1610 µg/kg was reported for 2,4-DNT, but it was determined to be an outlier.

Table 25. Estimation of boundary layer signature concentrations computed using surface soil concentration and soil–air partition coefficients above land mines.

Chemical	Median surface conc. (μg/kg)	Median $K_{s/a}$ (L-air/kg-soil)	Estimated boundary layer conc. (pg/L)
		a. TMA-5	
2,4,6-TNT	4.2	4.48×10^{6}	9.4×10^{-1}
2,4-DNT	15.5	1.04×10^{5}	1.5×10^{2}
2-ADNT	17.0	1.89×10^{6}	9.0×10^{0}
4-ADNT	16.7	1.55×10^{6}	1.1×10^{1}
		b. PMA-1A	
2,4,6-TNT	3.8	4.48×10^{6}	8.5×10^{-1}
2,4-DNT	31.6	1.04×10^{5}	3.0×10^{2}
2-ADNT	43.6	1.89×10^{6}	2.3×10^{1}
4-ADNT	44.3	1.55×10^{6}	2.9×10^{1}

for the s 2,4,6-TNT to 300 pg/L for 2,4-DNT above the PMA-1A mine. For the TMA-5, the predicted boundary layer concentration of 2,4-DNT is 160 times the prediction for 2,4,6-TNT; for the PMA-1A, the 2,4-DNT concentration is predicted to be 350 times that for 2,4,6-TNT. Likewise, for the PMA-1A, the concentration of 2,4-DNT is predicted to be about 10 times that for 2-ADNT and 4-ADNT.

The volume of the atmospheric boundary layer that develops with near equilibrium concentrations of ERCs, however, is probably very small (much less than 1 L), so the total mass of signature that is available to a vapor sensor at any given time is probably no greater than a few picograms of mostly 2,4-DNT. If, on the other hand, a sensor could be engineered that samples surface soil particles, a much greater mass of ERCs would be accessible. For example, if 1 g of surface soil containing the median concentration of signatures found above a TMA-5 were sampled, the mass of 15.5 ng of 2,4-DNT, with similar masses of the two ADNTs, would be available for the sensor, compared with the mass of signature present in 1 L of boundary layer air. This is a thousand-fold increase in the mass of signature that could be supplied to a sensor. Thus, the option of developing a concept based on particle sampling should be given serious consideration.

LITERATURE CITED

American Society for Testing and Materials (1985) Standard test method for classification of soils for engineering purposes, D 2487-83. *1985 Annual Book of ASTM Standards* 04.08. American Society for Testing and Materials, West Conshohocken, Pennsylvania, p. 395–408.

Bauer, C.F., S.M. Koza, and T.F. Jenkins (1989) Liquid chromatographic method for determination of explosives residues in soil: Collaborative study. *Journal of the Association of Official Analytical Chemists*, **73**: 541–552.

Bremner, J.M., and C.S. Mulvaney (1982) Nitrogen—Total. In *Methods of Soil Analysis*, Part 2. *Chemical and Microbiological Properties*. Agronomy Monograph No. 9, second edition. Madison, Wisconsin: America Society of Agronomy—Soil Science Society of America,

Chambers, W.B., P.J. Rodacy, E.E. Jones, B.J. Gomez, and R.L. Woodfin (1998) Chemical sensing system for classification of mine-like objects by explosives detection. In *Conference on Detection and Remediation Technologies for Mines and Minelike Targets III, Orlando, Florida, SPIE Proceedings*, vol. 3392, p. 565–574.

Day, P.R. (1956) Particle fractionation and particle-size analysis. In Methods of soil analysis, Part I (C.A. Black et al., ed.). *Agronomy*, **9**: 545–567.

Desilets, S., L.V. Haley, and U. Thekkadath (1998) Trace explosives detection for finding land mines. In *Conference on Detection and Remediation Technologies for Mines and Minelike Targets III, Orlando, Florida, SPIE Proceedings*, vol. 3392, p. 441–452.

Gee, G.W., and J.W. Bauder (1986) Particle-size analysis. In *Methods of Soil Analysis*, Part 1. *Physical and Mineralogical Methods*, Agronomy Monograph

No. 9, second edition. Madison, Wisconsin: America Society of Agronomy—Soil Science Society of America.

George, V., T.F. Jenkins, D.C. Leggett, J.H. Cragin, J. Phelan, J. Oxley, and J. Pennington (1999) Progress to date on determining the vapor signature of a buried land mine. In *Proceedings of the SPIE 13th Annual International Symposium on Aerospace/Defense Sensing, Simulation and Controls, 5–9 April 1999, Orlando, Florida*, Vol. 3710, pp. 258–269.

Grant, C.L., T.F. Jenkins, and S.M. Golden (1993) Experimental assessment of analytical holding times for nitroaromatic and nitramine explosives in soil. U.S. Army Cold Regions Research and Engineering Laboratory, Special Report 93-11.

Grant, C.L., T.F. Jenkins, K.F. Myers, and E.F. McCormick (1995) Comparison of fortification vs. field contamination for holding time estimates of soils containing explosives residues. *Journal of Environmental Toxicology and Chemistry*, **14**: 1865–1874.

Jenkins, T.F., D.C. Leggett, and T.A. Ranney (1999) Vapor signatures from military explosives: Part 1. Vapor transport from buried military-grade TNT. U.S. Army Cold Regions Research and Engineering Laboratory, Special Report 99-21.

Klute, A. (1986) Water retention: Laboratory methods. In *Methods of Soil Analysis*, Part 1. *Physical and Mineralogical Methods*, Agronomy Monograph No. 9, second edition. Madison, Wisconsin: America Society of Agronomy—Soil Science Society of America.

Leggett, D.C. (1985) Sorption of military explosive contaminants on bentonite drilling muds. U.S. Army Cold Regions Research and Engineering Laboratory, CRREL Report 85-18.

Leggett, DC., J.H. Cragin, T.F. Jenkins, and T.A. Ranney (in prep.) Release of explosive related vapors from land mines. U.S. Army Engineer Research and Development Center, Cold Regions Research and Engineering Laboratory, Technical Report.

Leggett, D.C., T.F. Jenkins, and R.P. Murrmann (1977) Composition of vapors evolved from military TNT as influenced by temperature, solid composition, age, and source. U.S. Army Cold Regions Research and Engineering Laboratory, Special Report 77-16.

Leggett, D.C., T.F. Jenkins, A. Hogan, T.A. Ranney, and P.H. Miyares (2000) External contamination on land mines by organic nitro-compounds. U.S. Army Engineer Research and Development Center, Cold Regions Research and Engineering Laboratory, ERDC/CRREL TR-00-2.

Maskarinec, M.P., C.K. Bayne, L.H. Johnson, S.K. Holladay, R.A. Jenkins, and B.A. Tomkins (1991) Stability of explosives in environmental water and soil samples. Oak Ridge National Laboratory, Oak Ridge, Tennessee, Report ORNL/TM-11770.

McCormick, N.G., F.E. Feeherry, and H.S. Levinson (1976) Microbial transformation of 2,4,6-trinitrotoluene and other nitroaromatic compounds. *Applied and Environmental Microbiology*, **31**(6): 949–958.

Miyares, P.H., and T.F. Jenkins (in press) Estimation of the half lives of key components in the chemical vapor signature of land mines. U.S. Army Engineer Research and Development Center, Cold Regions Research and Engineering Laboratory, Technical Report.

Murrmann, R.P., T.F. Jenkins, and D.C. Leggett (1971) Composition and mass spectra of impurities in military grade TNT vapor. U.S. Army Cold Regions Research and Engineering Laboratory, Special Report 158.

Nelson, D.W., and L.E. Sommers (1982) Total carbon, organic carbon, and organic matter. In *Methods of Soil Analysis,* Part 2. *Chemical and Microbiological Properties*, Agronomy Monograph No. 9, second edition. Madison, Wisconsin: America Society of Agronomy—Soil Science Society of America.

Olson, R.V., and R. Ellis, Jr. (1982) Iron. In *Methods of Soil Analysis,* Part 2. *Chemical and Microbiological Properties*, Agronomy Monograph No. 9, second edition. Madison, Wisconsin: America Society of Agronomy—Soil Science Society of America.

Patrick, W.H., Jr. (1958) Modification of method of particle size analysis. *Soil Science Society of America, Proceedings*, **22**: 332–336.

Pennington, J.C., K.A. Thorn, L.S. Inouye, V.A. McFarland, A.S. Jarvis, C.H. Lutz, C.A. Hayes, and B.E. Porter (1999) Explosives conjugation products in remediation matrices: Final report. U.S. Army Engineer Research and Development Center, Technical Report SERDP-99-4.

Phelan, J.M., J.L. Barnett, and P.J. Rodacy (in press) Post blast residues from anti-personnel land mines. Sandia National Laboratories, Sandia Report.

Rhoades, J.D. (1982) Cation exchange capacity. In *Methods of Soil Analysis,* Part 2. *Chemical and Microbiological Properties*, Agronomy Monograph No. 9, second edition. Madison, Wisconsin: America Society of Agronomy—Soil Science Society of America.

Thorne, P.G., and D.C. Leggett (1997) Hyrolytic release of bound residues from composted soil contaminated with 2,4,6-trinitrotoluene. *Environmental Toxicology and Chemistry*, **16**: 1132–1134.

U.S. Army Corps of Engineers (1960) The unified soil classification system. Technical Memorandum No. 3-357, Appendices A and B. U.S. Army Engineer Waterways Experiment Station, Vicksburg, Mississippi.

U.S. Department of Agriculture Soil Conservation Service (1989) Soil survey of Pulaski County, Missouri.

National Cooperative Soil Survey. Washington, DC: U.S. Department of Agriculture, Forest Service, and Missouri Agricultural Experiment Station.

U.S. Environmental Protection Agency (1998) Nitroaromatics and nitramines by GC-ECD. Fourth Update to SW846 Method 8095.

Walsh, M.E., and T.A. Ranney (1999) Determination of nitroaromatic, nitramine, and nitrate ester explosives in soils by gas chromatography–electron capture detection. U.S. Army Cold Regions Research and Engineering Laboratory, Special Report 99-12.

Webb, S.W., S.A. Finsterle, K. Pruess, and J.M. Phelan (1998) Prediction of the TNT signature from buried land mines. In *Proceedings of the Tough '98 Workshop, Berkeley, California.*

Webb, S.W. (in press) A simple extension of two-phase characteristic curves to include the dry region. *Water Resources Research.*

Yinon, Y. (1999) *Forensic and Environmental Detection of Explosives.* Chichester, England: John Wiley and Sons, Ltd.

APPENDIX A: ANALYTICAL RESULTS FOR SOIL SAMPLES COLLECTED AT THE FORT LEONARD WOOD RESEARCH MINEFIELD, AUGUST 1998

					Concentration (µg/kg)						
Lab sample #	*Mine type*	*EX number*	*Sample location*	*Sample depth (cm)*	*1,3-DNB*	*2,4-DNT*	*2,4,6-TNT*	*4-Am-DNT*	*2-Am-DNT*	*2,6-DNT*	*TNB*
28	PMA-1A	11	over center	surface	<d	<d	<d	<d	<d	<d	<d
27	PMA-1A	11	N	0-3	<d	<d	<d	<d	<d	<d	<d
26	PMA-1A	11	N	3-6	<d	<d	<d	<d	<d	<d	<d
15	PMA-1A	12	S	0-3	<d	<d	<d	<d	<d	<d	<d
12	PMA-1A	12	S	3-6	<d	<d	<d	<d	<d	<d	<d
19	PMA-1A	13	over center	surface	<d	<d	<d	<d	<d	<d	<d
16	PMA-1A	13	S	surface	<d	<d	<d	<d	<d	<d	<d
17	PMA-1A	13	S	0-3	<d	<d	<d	<d	<d	<d	<d
13	PMA-1A	13	S	3-6	4.68	12	1.16	8.95	8.1	<d	<d
13 rep					5.37	16	1.32	10.7	9.74	<d	<d
18	PMA-1A	14	over center	surface	<d	<d	<d	<d	<d	<d	<d
14	PMA-1A	14	N	0-3	<d	<d	<d	<d	<d	<d	<d
141	PMA-1A	48	over center	surface	<d	<d	<d	<d	<d	<d	<d
138	PMA-1A	48	N	surface	<d	<d	<d	<d	<d	<d	<d
140	PMA-1A	48	N	0-3	<d	<d	<d	<d	<d	<d	<d
142	PMA-1A	48	N	3-6	<d	<d	<d	<d	<d	<d	<d
139	PMA-1A	48	S	surface	<d	<d	<d	<d	<d	<d	<d
31	PMA-1A	49	over center	surface	<d	<d	<d	<d	<d	<d	<d
32	PMA-1A	49	S	surface	<d	<d	<d	166	198	<d	<d
30	PMA-1A	49	S	0-3	32.5	76.7	1.47	317	314	1.11	<d
29	PMA-1A	49	S	0-3	4.01	10.9	1.47	21.3	29.2	<d	<d
29 rep	PMA-1A				6.81	18.1	<d	36.6	40	<d	<d
95	PMA-2	102	over center	surface	<d	<d	<d	<d	<d	<d	<d
94	PMA-2	102	S	surface	<d	<d	<d	<d	<d	<d	<d
96	PMA-2	102	S	0-3	<d	<d	<d	<d	<d	<d	<d
93	PMA-2	102	S	3-6	<d	<d	<d	<d	<d	<d	<d
137	PMA-2	111	over center	surface	<d	<d	<d	<d	<d	<d	<d
98	PMA-2	111	W	surface	<d	<d	<d	<d	<d	<d	<d
97	PMA-2	111	W	0-3	<d	<d	<d	<d	<d	<d	<d
99	PMA-2	111	W	3-6	<d	<d	<d	<d	<d	<d	<d
58	TMA-5	253	over center	surface	<d	<d	<d	<d	<d	<d	<d
49	TMA-5	253	E	surface	<d	<d	<d	<d	<d	<d	<d
56	TMA-5	253	E	0-5	<d	<d	<d	<d	<d	<d	<d
50	TMA-5	253	E	5-10	<d	<d	<d	<d	<d	<d	<d
55	TMA-5	253	E	10-15	<d	<d	<d	<d	<d	<d	<d
61	TMA-5	253	N	0-5	<d	<d	<d	<d	<d	<d	<d
59	TMA-5	253	N	5-10	<d	<d	<d	<d	<d	<d	<d
54	TMA-5	253	N	10-15	<d	<d	<d	<d	<d	<d	<d
51	TMA-5	253	S	surface	<d	<d	<d	<d	<d	<d	<d
48	TMA-5	253	S	5-10	<d	<d	<d	<d	<d	<d	<d
57	TMA-5	253	S	10-15	<d	<d	<d	<d	<d	<d	<d
53	TMA-5	253	W	surface	<d	<d	<d	<d	<d	<d	<d
52	TMA-5	253	W	0-5	<d	<d	<d	<d	<d	<d	<d
60	TMA-5	253	W	5-10	<d	<d	<d	<d	<d	<d	<d
136	TMA-5	264	over center	surface	<d	<d	<d	<d	<d	<d	<d
121	TMA-5	264	E	surface	<d	<d	<d	<d	<d	<d	<d
123	TMA-5	264	E	0-5	<d	<d	<d	<d	<d	<d	<d
124	TMA-5	264	E	5-10	<d	2.34	<d	2.09	3.29	<d	<d
134	TMA-5	264	E	10-15	3.93	116	3.86	115	164	0.721	<d
134 rep					4.76	95.5	9.8	85.6	127	<d	<d
129	TMA-5	264	N	surface	<d	<d	<d	<d	<d	<d	<d
132	TMA-5	264	N	0-5	<d	<d	<d	<d	<d	<d	<d

Lab sample #	Mine type	EX number	Sample location	Sample depth (cm)	Concentration (µg/kg) 1,3-DNB	2,4-DNT	2,4,6-TNT	4-Am-DNT	2-Am-DNT	2,6-DNT	TNB
135	TMA-5	264	N	5-10	<d	<d	<d	<d	<d	<d	<d
125	TMA-5	264	N	10-15	<d	<d	<d	<d	<d	<d	<d
131	TMA-5	264	S	surface	<d	<d	<d	<d	<d	<d	<d
130	TMA-5	264	S	0-5	<d	<d	<d	<d	<d	<d	<d
127	TMA-5	264	S	5-10	<d	<d	<d	<d	<d	<d	<d
122	TMA-5	264	S	10-15	<d	<d	<d	<d	<d	<d	<d
133	TMA-5	264	W	surface	<d	<d	<d	<d	<d	<d	<d
128	TMA-5	264	W	0-5	<d	<d	<d	<d	<d	<d	<d
126	TMA-5	264	W	5-10	<d	<d	<d	<d	<d	<d	<d
201 (wet)	TMA-5	265	over center	surface	<d	<d	<d	<d	<d	<d	<d
200 (wet)	TMA-5	265	E	surface	<d	3.9	<d	14.8	14.9	<d	<d
65	TMA-5	265	E	0-5	7.18	108	16.2	229	469	1.86	<d
69	TMA-5	265	E	5-10	16.1	520	22.5	434	720	8.92	<d
67	TMA-5	265	E	10-15	131	2,966	3,267	1,642	2,089	45.5	139
67 rep	TMA-5				205	3,505	4,272	2,757	2,692	39	157
70	TMA-5	265	N	surface	<d	<d	<d	<d	<d	<d	<d
68	TMA-5	265	N	0-5	<d	<d	<d	<d	<d	<d	<d
62	TMA-5	265	N	5-10	<d	<d	<d	<d	<d	<d	<d
71	TMA-5	265	N	10-15	<d	<d	<d	<d	<d	<d	<d
202	TMA-5	265	S	surface	<d	29	3.7	70	90	<d	<d
66	TMA-5	265	S	0-5	1.05	60.9	4.68	52.2	93.7	<d	<d
64	TMA-5	265	S	5-10	11.6	409	42.8	495	925	3.31	<d
63	TMA-5	265	S	10-15	8.11	271	19.5	454	511	3.14	<d
63 rep	TMA-5				13.2	280	24	381	571	<d	<d
86	TMA-5	267	over center	surface	<d	<d	<d	<d	<d	<d	<d
78	TMA-5	267	E	surface	<d	<d	<d	<d	<d	<d	<d
82	TMA-5	267	E	0-5	<d	<d	<d	<d	<d	<d	<d
83	TMA-5	267	E	5-10	<d	<d	<d	<d	<d	<d	<d
85	TMA-5	267	E	10-15	<d	<d	<d	<d	<d	<d	<d
91	TMA-5	267	N	surface	<d	<d	<d	<d	<d	<d	<d
87	TMA-5	267	N	0-5	<d	<d	<d	<d	<d	<d	<d
77	TMA-5	267	N	5-10	<d	<d	<d	<d	<d	<d	<d
81	TMA-5	267	N	10-15	<d	<d	<d	<d	<d	<d	<d
80	TMA-5	267	S	surface	<d	<d	<d	<d	<d	<d	<d
76	TMA-5	267	S	0-5	<d	<d	<d	<d	<d	<d	<d
92	TMA-5	267	S	5-10	<d	<d	<d	<d	<d	<d	<d
90	TMA-5	267	S	10-15	<d	<d	<d	<d	<d	<d	<d
88	TMA-5	267	W	surface	<d	<d	<d	<d	<d	<d	<d
84	TMA-5	267	W	0-5	<d	<d	<d	<d	<d	<d	<d
89	TMA-5	267	W	5-10	<d	<d	<d	<d	<d	<d	<d
79	TMA-5	267	W	10-15	<d	<d	<d	<d	<d	<d	<d
3	TMA-5	292	over center	surface	<d	<d	<d	<d	<d	<d	<d
2	TMA-5	292	E	0-5	1.75	15.1	3.2	24	24.7	<d	<d
8	TMA-5	292	E	5-10	<d	69.9	16.3	156	117	<d	<d
4	TMA-5	292	E	10-15	8.78	317	44.2	324	474	1.66	<d
4 rep					10	377	61.5	425	585	<d	<d
203	TMA-4	292	S	surface	<d	60	5.2	13	17	<d	<d
10	TMA-5	292	S	0-5	<d	20.1	2.19	35.1	47.7	<d	<d
6	TMA-5	292	S	5-10	1.3	20.8	4.04	28	36	<d	<d
1	TMA-5	292	S	10-15	3.53	89.5	7.74	58.6	77.3	<d	<d
1 rep					<d	71.4	7.66	71.3	60.1	<d	<d
5	TMA-5	292	W	surface	<d	<d	<d	<d	<d	<d	<d
9	TMA-5	292	W	0-5	<d	<d	<d	<d	<d	<d	<d
7	TMA-5	292	W	5-10	<d	<d	<d	<d	<d	<d	<d
11	TMA-5	292	W	10-15	<d	<d	<d	<d	<d	<d	<d
101	TMA-5	293	over center	surface	<d	<d	<d	<d	<d	<d	<d
104	TMA-5	293	E	surface	<d	<d	<d	<d	<d	<d	<d

to contents

Lab sample #	Mine type	EX number	Sample location	Sample depth (cm)	Concentration (µg/kg) 1,3-DNB	2,4-DNT	2,4,6-TNT	4-Am-DNT	2-Am-DNT	2,6-DNT	TNB
118	TMA-5	293	E	0-10	<d	<d	<d	<d	<d	<d	<d
108	TMA-5	293	E	10-15	<d	21.6	1.15	15.3	9.61	<d	<d
108 rep					<d	37.9	<d	14.2	17.4	<d	<d
120	TMA-5	293	E	15-20	34.5	437	46	115	144	4.29	<d
120 rep					44.8	480	51.2	240	161	4.43	<d
113	TMA-5	293	N	surface	<d	<d	<d	<d	<d	<d	<d
105	TMA-5	293	N	shavings	<d	<d	<d	<d	<d	<d	<d
106	TMA-5	293	N	0-5	<d	<d	<d	<d	<d	<d	<d
115	TMA-5	293	N	5-10	<d	<d	<d	<d	<d	<d	<d
103	TMA-5	293	S	surface	<d	<d	<d	<d	<d	<d	<d
112	TMA-5	293	S	0-5	<d	<d	<d	<d	<d	<d	<d
119	TMA-5	293	S	5-10	<d	<d	<d	<d	<d	<d	<d
100	TMA-5	293	S	10-15	<d	27.8	<d	18.4	19.7	<d	<d
100 rep					<d	34.7	<d	28.8	23.9	<d	<d
107	TMA-5	293	over center	S2	<d	<d	<d	<d	<d	<d	<d
110	TMA-5	293	over center	0-5	<d	<d	<d	<d	<d	<d	<d
102	TMA-5	293	over center	5-10	<d	<d	<d	<d	<d	<d	<d
111	TMA-5	293	W	surface	<d	<d	<d	<d	<d	<d	<d
116	TMA-5	293	W	0-5	<d	<d	<d	<d	<d	<d	<d
114	TMA-5	293	W	5-10	22.9	65.8	42.3	65.6	39.8	1.17	<d
109	TMA-5	293	W	10-15	<d	<d	<d	<d	<d	<d	<d
117	TMA-5	293	W	15-20	106	201	250	102	88.3	<d	<d
117 rep					92.9	204	233	79.6	84	<d	<d
43	TMM-1	313	over center	surface	<d	<d	<d	<d	<d	<d	<d
40	TMM-1	313	E	surface	<d	<d	<d	<d	<d	<d	<d
38	TMM-1	313	E	0-5	<d	<d	<d	<d	<d	<d	<d
41	TMM-1	313	E	5-10	<d	<d	<d	<d	<d	<d	<d
34	TMM-1	313	E	10-15	<d	<d	<d	<d	<d	<d	<d
46	TMM-1	313	N	0-5	<d	<d	<d	<d	<d	<d	<d
47	TMM-1	313	N	5-10	<d	<d	<d	<d	<d	<d	<d
45	TMM-1	313	N	10-15	<d	<d	<d	<d	<d	<d	<d
39	TMM-1	313	S	0-5	<d	<d	<d	<d	<d	<d	<d
37	TMM-1	313	S	5-10	<d	<d	<d	<d	<d	<d	<d
42	TMM-1	313	S	10-15	<d	<d	<d	<d	<d	<d	<d
33	TMM-1	313	W	surface	<d	<d	<d	<d	<d	<d	<d
35	TMM-1	313	W	0-5	<d	<d	<d	<d	<d	<d	<d
44	TMM-1	313	W	5-10	<d	<d	<d	<d	<d	<d	<d
36	TMM-1	313	W	10-15	<d	<d	<d	<d	<d	<d	<d
75	TMM-1	343	over center	surface	<d	<d	<d	<d	<d	<d	<d
72	TMM-1	343	S	0-5	<d	<d	<d	<d	<d	<d	<d
74	TMM-1	343	W	0-5	<d	<d	<d	<d	<d	<d	<d
73	TMM-1	343	W	5-10	<d	<d	<d	<d	<d	<d	<d
143	TMM-1	343	W	10-15	<d	<d	<d	<d	<d	<d	<d

NOTES:
Concentrations greater than 100 µg/kg were determined by HPLC-UV.
Concentrations less than 100 µg/kg were determined by GC-ECD.
Replicate X samples are separate 2.00 g subsamples.

to contents

APPENDIX B: ANALYTICAL RESULTS FOR SOIL SAMPLES COLLECTED AT THE FORT LEONARD WOOD RESEARCH MINEFIELD, NOVEMBER 1998

					Concentration (µg/kg)					
Lab sample #	*Mine type*	*EX number*	*Sample location*	*Sample depth (cm)*	*1,3-DNB*	*2,4-DNT*	*2,4,6-TNT*	*4-Am-DNT*	*2-Am-DNT*	*2,6-DNT*
N132	PMA-1A	12	E	surface	<d	<d	<d	<d	<d	<d
N131	PMA-1A	12	E	0-2.5	<d	<d	<d	<d	<d	<d
N133	PMA-1A	12	E	2.5-5	<d	0.8	<d	10.7	3.6	<d
N134	PMA-1A	12	over	surface	<d	<d	<d	<d	<d	<d
N128	PMA-1A	14	over	surface	<d	<d	<d	<d	<d	<d
N129	PMA-1A	14	S	surface	<d	7	<d	32.9	55.5	<d
N130	PMA-1A	14	S	0-2.5	<d	<d	<d	<d	<d	<d
N127	PMA-1A	14	S	2.5-5	<d	<d	<d	<d	<d	<d
N184	PMA-1A	11	over	surface	<d	<d	<d	<d	<d	<d
N187	PMA-1A	11	S	surface	<d	<d	<d	TRACE	TRACE	<d
N185	PMA-1A	11	S	0-2.5	9.26	52.3	3.71	7.9	5.98	<d
N186	PMA-1A	11	S	2.5-5	18.2	142	11.4	95.2	87.8	<d
N183	PMA-1A	11	S	5-8	6.55	30.9	TRACE	19	25	<d
N136	PMA-1A	13	N	surface	<d	<d	<d	<d	<d	<d
N137	PMA-1A	13	N	0-2.5	<d	<d	<d	<d	<d	<d
N138	PMA-1A	13	N	2.5-5	<d	<d	<d	<d	<d	<d
N135	PMA-1A	13	over	surface	<d	<d	<d	<d	<d	<d
N147	PMA-1A	49	N	surface	37.4	51	<d	18.2	12.7	<d
N146	PMA-1A	49	N	0-2.5	<d	<d	<d	<d	<d	<d
N143	PMA-1A	49	N	2.5-5	<d	<d	<d	<d	<d	<d
N144	PMA-1A	49	over	surface	<d	<d	<d	<d	<d	<d
N145	PMA-1A	40	N	surface	<d	<d	<d	<d	<d	<d
N148	PMA-1A	40	N	0-2.5	<d	<d	<d	<d	<d	<d
N140	PMA-1A	40	N	2.5-5	<d	<d	<d	<d	<d	<d
N139	PMA-1A	40	over	surface	<d	<d	<d	<d	<d	<d
N015	PMA-2	111	over	surface	<d	<d	<d	<d	<d	<d
N016	PMA-2	111	S	surface	<d	<d	<d	TRACE	TRACE	<d
N188	PMA-2	111	S	0-2.5	<d	<d	<d	8.37	TRACE	<d
N189	PMA-2	111	S	2.5-5	<d	<d	<d	<d	<d	<d
N014	PMA-2	111	S	5-8	<d	<d	<d	<d	<d	<d
MISSING	PMA-2	119								
N022	PMA-2	102	NW	surface	<d	<d	<d	<d	<d	<d
N024	PMA-2	102	NW	0-2.5	<d	<d	<d	<d	<d	<d
N023	PMA-2	102	NW	2.5-5	<d	<d	<d	<d	<d	<d
N021	PMA-2	102	over	surface	<d	<d	<d	<d	<d	<d
MISSING	TMA-5	293	NE	surface						
MISSING	TMA-5	293	NE	0-5						
N141	TMA-5	293	NE	5-9	<d	<d	<d	<d	<d	<d
N142	TMA-5	293	NE	9-14	<d	<d	<d	<d	<d	<d
MISSING	TMA-5	293	NW	surface						
MISSING	TMA-5	293	NW	0-6						
MISSING	TMA-5	293	NW	6-12						
MISSING	TMA-5	293	NW	12-17						
MISSING	TMA-5	293	SE	surface						
MISSING	TMA-5	293	SE	0-4						
MISSING	TMA-5	293	SE	4-9						
MISSING	TMA-5	293	SE	9-11						
MISSING	TMA-5	293	SW	surface						
MISSING	TMA-5	293	SW	0-6						
MISSING	TMA-5	293	SW	6-10						
MISSING	TMA-5	293	SW	10-15						
N109	TMA-5	265	NE	surface	<d	<d	<d	<d	<d	<d
N116	TMA-5	265	NE	0-6	<d	<d	<d	<d	<d	<d

Concentration (µg/kg)

2,5-DNT	3,5-DNT	3,4-DNT	3,5-DNA	TNB	3-Nitro Aniline	2,4,5-TNT	1,4-DNB	4-Am-2-NT	m-NT	2,3,4-TNT	1,2-DNB	2,3-DNT	2-Am-4-NT
<d	<d	<d	<d	<d	10.6	<d	<d	<d	<d	<d	<d	<d	<d
<d	<d	<d	<d	<d	<d	<d	<d	<d	<d	<d	<d	<d	<d
<d	<d	<d	<d	<d	<d	<d	<d	<d	<d	<d	<d	<d	<d
<d	<d	<d	<d	<d	<d	<d	<d	<d	<d	<d	<d	<d	<d
<d	<d	<d	<d	<d	<d	<d	<d	<d	<d	<d	<d	<d	<d
<d	<d	<d	<d	<d	125	<d	<d	<d	<d	<d	<d	<d	<d
<d	<d	<d	<d	<d	<d	<d	<d	<d	<d	<d	<d	<d	<d
<d	<d	<d	<d	<d	<d	<d	<d	<d	<d	<d	<d	<d	<d
<d	<d	<d	<d	<d	<d	<d	<d	<d	<d	<d	<d	<d	<d
<d	<d	<d	<d	<d	<d	<d	<d	<d	<d	<d	<d	<d	<d
<d	2.5	<d	<d	<d	39.4	<d	<d	<d	<d	<d	<d	<d	<d
<d	13.2	<d	<d	<d	104	<d	<d	36.2	<d	<d	<d	<d	TRACE
<d	<d	<d	<d	<d	20.7	<d	<d	<d	<d	<d	<d	<d	<d
<d	<d	<d	<d	<d	<d	<d	<d	<d	<d	<d	<d	<d	<d
<d	<d	<d	<d	<d	<d	<d	<d	<d	<d	<d	<d	<d	<d
<d	<d	<d	<d	<d	<d	<d	<d	<d	<d	<d	<d	<d	<d
<d	<d	<d	<d	<d	<d	<d	<d	<d	<d	<d	<d	<d	<d
<d	<d	<d	<d	<d	42.9	<d	<d	<d	<d	<d	<d	<d	<d
<d	<d	<d	<d	<d	<d	<d	<d	<d	<d	<d	<d	<d	<d
<d	<d	<d	<d	<d	<d	<d	<d	<d	<d	<d	<d	<d	<d
<d	<d	<d	<d	<d	12.9	<d	<d	<d	<d	<d	<d	<d	<d
<d	<d	<d	<d	<d	<d	<d	<d	<d	<d	<d	<d	<d	<d
<d	<d	<d	<d	<d	<d	<d	<d	<d	<d	<d	<d	<d	<d
<d	<d	<d	<d	<d	<d	<d	<d	<d	<d	<d	<d	<d	<d
<d	<d	<d	<d	<d	<d	<d	<d	<d	<d	<d	<d	<d	<d
<d	<d	<d	<d	<d	<d	<d	<d	<d	<d	<d	<d	<d	<d
<d	<d	2.11	<d	<d	<d	<d	<d	<d	<d	<d	<d	<d	<d
<d	<d	<d	<d	<d	<d	<d	<d	<d	<d	<d	<d	<d	<d
<d	<d	<d	<d	<d	<d	<d	<d	<d	<d	<d	<d	<d	<d
<d	<d	<d	<d	<d	<d	<d	<d	<d	<d	<d	<d	<d	<d
<d	<d	<d	<d	<d	<d	<d	<d	<d	<d	<d	<d	<d	<d
<d	<d	<d	<d	<d	<d	<d	<d	<d	<d	<d	<d	<d	<d
<d	<d	<d	<d	<d	<d	<d	<d	<d	<d	<d	<d	<d	<d
<d	<d	<d	<d	<d	14	<d	<d	<d	<d	<d	<d	<d	<d
<d	<d	<d	<d	<d	<d	<d	<d	<d	<d	<d	<d	<d	<d
<d	<d	<d	<d	<d	<d	<d	<d	<d	<d	<d	<d	<d	<d
<d	<d	<d	<d	<d	<d	<d	<d	<d	<d	<d	<d	<d	<d
<d	<d	<d	<d	<d	<d	<d	<d	<d	<d	<d	<d	<d	<d
<d	<d	<d	<d	<d	<d	<d	<d	<d	<d	<d	<d	<d	<d

to contents

Lab sample #	Mine type	EX number	Sample location	Sample depth (cm)	Concentration (µg/kg) 1,3-DNB	2,4-DNT	2,4,6-TNT	4-Am-DNT	2-Am-DNT	2,6-DNT
N108	TMA-5	265	NE	6-10	<d	<d	<d	<d	<d	<d
N114	TMA-5	265	NE	10-16	<d	<d	<d	<d	<d	<d
N102	TMA-5	265	NW	10-15	<d	<d	<d	<d	<d	<d
N110	TMA-5	265	NW	surface	<d	<d	<d	<d	<d	<d
N104	TMA-5	265	NW	0-6	<d	<d	<d	<d	<d	<d
N106	TMA-5	265	NW	6-10	<d	<d	<d	<d	<d	<d
N103	TMA-5	265	SE	surface	<d	79.6	6.94	143	220	<d
N105	TMA-5	265	SE	0-5	<d	144	16.7	279	443	3.8
N111	TMA-5	265	SE	5-10	9.83	236	10	147	239	6.19
N107	TMA-5	265	SE	10 -15	67.9	823	75.1	401	584	18.1
N113	TMA-5	265	SW	surface	<d	<d	<d	<d	<d	<d
N115	TMA-5	265	SW	0-5	8.23	240	16.7	542	873	6.52
N101	TMA-5	265	SW	5-10	3.4	122	16.9	154	257	3.85
N112	TMA-5	265	SW	10-15	13.6	441	63.5	528	651	12
N117	TMA-5	265	over	surface	<d	<d	<d	<d	<d	<d
N122	TMA-5	292	NE	surface	<d	<d	<d	<d	<d	<d
N118	TMA-5	292	NE	0-5	<d	<d	<d	<d	<d	<d
N120	TMA-5	292	NE	5-10	<d	<d	<d	<d	<d	<d
N126	TMA-5	292	NE	10-15	<d	4.89	<d	4.39	3.66	<d
MISSING	TMA-5	292	NW	surface						
MISSING	TMA-5	292	NW	0-6						
N125	TMA-5	292	NW	6-10	<d	<d	<d	<d	<d	<d
MISSING	TMA-5	292	NW	10-15						
MISSING	TMA-5	292	SE	surface						
MISSING	TMA-5	292	SE	0-6						
MISSING	TMA-5	292	SE	6-10						
MISSING	TMA-5	292	SE	10-15						
MISSING	TMA-5	292	SW	surface						
N119	TMA-5	292	SW	0-5	<d	10.2	<d	6.38	15.1	<d
N123	TMA-5	292	SW	5-11	6	83.9	12.1	30.7	47.7	<d
N124	TMA-5	292	SW	11-13	<d	20.2	<d	10.1	14.2	<d
N121	TMA-5	292	over	surface	<d	<d	<d	<d	<d	<d
N228	TMA-5	268	over center	surface	<d	10	<d	4.73	8.47	<d
N239	TMA-5	268	over center	0-4	<d	<d	<d	<d	<d	<d
N256	TMA-5	268	over center	4-6	<d	<d	<d	<d	<d	<d
N238	TMA-5	268	over center	6-mine	<d	3.06	<d	<d	0.9	<d
N156	TMA-5	268	center	under	13.9	1,770	167	1,000	819	33.3
N257	TMA-5	268	E-10cm	surface	<d	26.8	<d	25.4	38.2	<d
N237	TMA-5	268	E-10cm	0-4	<d	<d	<d	<d	4.7	<d
N152	TMA-5	268	E-10cm	4-9	<d	<d	<d	<d	<d	<d
N159	TMA-5	268	E-10cm	9-13	<d	<d	<d	<d	<d	<d
N247	TMA-5	268	E-20cm	surface	<d	TRACE	<d	3.52	8.23	<d
N230	TMA-5	268	E-20cm	0-4	<d	<d	<d	<d	<d	<d
N203	TMA-5	268	E-20cm	4-9	<d	52	<d	TRACE	TRACE	<d
N153	TMA-5	268	E-20cm	9-14	<d	<d	<d	<d	<d	<d
N149	TMA-5	268	E	surface	<d	<d	<d	<d	<d	<d
N246	TMA-5	268	E	0-5	<d	<d	<d	<d	4.31	<d
N169	TMA-5	268	E	5-10	<d	<d	<d	1.89	3.67	<d
N155	TMA-5	268	E	10-15	<d	30.8	TRACE	23	38.3	<d
N234	TMA-5	268	over NE	surface	<d	<d	<d	<d	<d	<d
N251	TMA-5	268	over NE	0-3	<d	<d	<d	<d	2.88	<d
N222	TMA-5	268	over NE	3-6	<d	<d	<d	<d	<d	<d
N219	TMA-5	268	over NE	6-mine	<d	<d	<d	<d	<d	<d
N260	TMA-5	268	N-10cm	surface	<d	<d	<d	<d	<d	<d
N218	TMA-5	268	N-10cm	0-5	<d	<d	<d	<d	<d	<d
N207	TMA-5	268	N-10cm	5-9	<d	<d	<d	<d	<d	<d
N205	TMA-5	268	N-10cm	9-12	<d	<d	<d	<d	<d	<d
N212	TMA-5	268	N-15cm	surface	<d	<d	<d	<d	<d	<d
N232	TMA-5	268	N-15cm	0-6	<d	TRACE	<d	<d	TRACE	<d
N166	TMA-5	268	N-15cm	6-11	<d	<d	<d	<d	<d	<d
N226	TMA-5	268	N-15cm	11-14	<d	<d	<d	<d	<d	<d

Concentration (µg/kg)

2,5-DNT	3,5-DNT	3,4-DNT	3,5-DNA	TNB	3-Nitro Aniline	2,4,5-TNT	1,4-DNB	4-Am-2-NT	m-NT	2,3,4-TNT	1,2-DNB	2,3-DNT	2-Am-4-NT
<d	<d	<d	<d	<d	<d	<d	<d	<d	<d	<d	<d	<d	<d
<d	<d	<d	<d	<d	<d	<d	<d	<d	<d	<d	<d	<d	<d
<d	<d	<d	<d	<d	<d	<d	<d	<d	<d	<d	<d	<d	<d
<d	<d	<d	<d	<d	<d	<d	<d	<d	<d	<d	<d	<d	<d
<d	<d	<d	<d	<d	<d	<d	<d	<d	<d	<d	<d	<d	<d
<d	<d	<d	<d	<d	<d	<d	<d	<d	<d	<d	<d	<d	<d
<d	<d	<d	<d	<d	15.7	<d	<d	<d	<d	<d	<d	<d	<d
<d	<d	<d	<d	<d	14	<d	<d	<d	<d	<d	<d	<d	<d
<d	11.5	<d	<d	<d	18.6	<d	<d	<d	<d	<d	<d	<d	<d
<d	59.1	<d	<d	<d	47.6	<d	<d	<d	<d	<d	<d	<d	<d
<d	<d	<d	<d	<d	<d	<d	<d	<d	<d	<d	<d	<d	<d
<d	7.91	<d	<d	<d	<d	<d	<d	<d	<d	<d	<d	<d	<d
<d	<d	<d	<d	<d	<d	<d	<d	<d	<d	<d	<d	<d	<d
<d	27.7	<d	<d	<d	25.8	<d	<d	<d	<d	<d	<d	<d	<d
<d	<d	<d	<d	<d	<d	<d	<d	<d	<d	<d	<d	<d	<d
<d	<d	<d	<d	<d	<d	<d	<d	<d	<d	<d	<d	<d	<d
<d	<d	<d	<d	<d	<d	<d	<d	<d	<d	<d	<d	<d	<d
<d	<d	<d	<d	<d	<d	<d	<d	<d	<d	<d	<d	<d	<d
<d	<d	<d	<d	<d	TRACE	<d	<d	<d	<d	<d	<d	<d	<d
<d	<d	<d	<d	<d	<d	<d	<d	<d	<d	<d	<d	<d	<d
<d	<d	<d	<d	<d	<d	<d	<d	<d	<d	<d	<d	<d	<d
<d	<d	<d	<d	<d	<d	<d	<d	<d	<d	<d	<d	<d	<d
<d	<d	<d	<d	<d	<d	<d	<d	<d	<d	<d	<d	<d	<d
<d	<d	<d	<d	<d	<d	<d	<d	<d	<d	<d	<d	<d	<d
<d	<d	<d	<d	<d	<d	<d	<d	<d	<d	<d	<d	<d	<d
<d	<d	<d	<d	<d	<d	<d	<d	<d	<d	<d	<d	<d	<d
<d	<d	<d	<d	<d	<d	<d	<d	<d	<d	<d	<d	<d	<d
<d	<d	<d	<d	<d	<d	<d	<d	<d	<d	<d	<d	<d	<d
2.73	171	<d	<d	<d	77.6	<d	<d	119	<d	<d	<d	<d	163
<d	<d	<d	<d	<d	16.2	<d	<d	<d	<d	<d	<d	<d	<d
<d	<d	<d	<d	<d	<d	<d	<d	<d	<d	<d	<d	<d	<d
<d	<d	<d	<d	<d	<d	<d	<d	<d	<d	<d	<d	<d	<d
<d	<d	<d	<d	<d	<d	<d	<d	<d	<d	<d	<d	<d	<d
<d	<d	<d	<d	<d	<d	<d	<d	<d	<d	<d	<d	<d	<d
<d	<d	<d	<d	<d	<d	<d	<d	<d	<d	<d	<d	<d	<d
<d	<d	<d	<d	<d	<d	<d	<d	<d	<d	<d	<d	<d	<d
<d	<d	<d	<d	<d	<d	<d	<d	<d	<d	<d	<d	<d	<d
<d	<d	<d	<d	<d	<d	<d	<d	<d	<d	<d	<d	<d	<d
<d	<d	<d	<d	<d	<d	<d	<d	<d	<d	<d	<d	<d	<d
<d	<d	<d	<d	<d	<d	<d	<d	<d	<d	<d	<d	<d	<d
<d	<d	<d	<d	<d	<d	<d	<d	<d	<d	<d	<d	<d	<d
<d	<d	<d	<d	<d	<d	<d	<d	<d	<d	<d	<d	<d	<d
<d	<d	<d	<d	<d	<d	<d	<d	<d	<d	<d	<d	<d	<d
<d	<d	<d	<d	<d	<d	<d	<d	<d	<d	<d	<d	<d	<d
<d	<d	<d	<d	<d	<d	<d	<d	<d	<d	<d	<d	<d	<d
<d	<d	<d	<d	<d	<d	<d	<d	<d	<d	<d	<d	<d	<d
<d	8.31	9.89	<d	<d	24	<d	<d	<d	<d	<d	<d	<d	<d
<d	<d	<d	<d	<d	<d	<d	<d	<d	<d	<d	<d	<d	<d
<d	<d	<d	<d	<d	<d	<d	<d	<d	<d	<d	<d	<d	<d
<d	<d	<d	<d	<d	<d	<d	<d	<d	<d	<d	<d	<d	<d
<d	<d	<d	<d	<d	<d	<d	<d	<d	<d	<d	<d	<d	<d
<d	<d	<d	<d	<d	<d	<d	<d	<d	<d	<d	<d	<d	<d
<d	<d	<d	<d	<d	<d	<d	<d	<d	<d	<d	<d	<d	<d
<d	<d	<d	<d	<d	<d	<d	<d	<d	<d	<d	<d	<d	<d

Lab sample #	Mine type	EX number	Sample location	Sample depth (cm)	Concentration (µg/kg) 1,3-DNB	2,4-DNT	2,4,6-TNT	4-Am-DNT	2-Am-DNT	2,6-DNT
N229	TMA-5	268	N	surface	<d	20.3	<d	<d	<d	<d
N158	TMA-5	268	N	0-5	<d	<d	<d	7.86	7.27	<d
N210	TMA-5	268	N	5-9	<d	<d	<d	<d	<d	<d
N254	TMA-5	268	N	9-13	<d	<d	<d	<d	<d	<d
N161	TMA-5	268	NW	under	877	16,300	12,700	1,360	1,310	412
N213	TMA-5	268	over NW	surface	<d	TRACE	<d	<d	<d	<d
N245	TMA-5	268	over NW	0-4	<d	<d	<d	1.95	TRACE	<d
N217	TMA-5	268	over NW	4-5.5	<d	<d	<d	<d	<d	<d
N221	TMA-5	268	over NW	5.5-mine	<d	<d	<d	<d	<d	<d
N209	TMA-5	268	over SE	surface	<d	<d	<d	4.31	4.35	<d
N241	TMA-5	268	over SE	0-4	<d	<d	<d	<d	TRACE	<d
N249	TMA-5	268	over SE	4-6	<d	<d	<d	<d	<d	<d
N244	TMA-5	268	over SE	6-mine	<d	<d	<d	<d	TRACE	<d
N258	TMA-5	268	S-10cm	surface	<d	<d	<d	<d	<d	<d
N164	TMA-5	268	S-10cm	0-5	<d	15.7	<d	18.3	31.5	<d
N154	TMA-5	268	S-10cm	5-9	<d	<d	<d	<d	<d	<d
N223	TMA-5	268	S-10cm	9-13	<d	<d	<d	<d	<d	<d
N243	TMA-5	268	S-20cm	surface	<d	1,610	<d	<d	10.4	44
N220	TMA-5	268	S-20cm	0-5	<d	TRACE	<d	TRACE	TRACE	<d
N225	TMA-5	268	S-20cm	5-8	<d	<d	<d	<d	<d	<d
N201	TMA-5	268	S-20cm	8-14	<d	<d	<d	<d	<d	<d
N206	TMA-5	268	S	surface	<d	<d	<d	7.8	9.4	<d
N242	TMA-5	268	S	0-4	<d	<d	<d	<d	<d	<d
N162	TMA-5	268	S	4-8	<d	<d	<d	<d	<d	<d
N163	TMA-5	268	S	8-12	<d	<d	<d	<d	<d	<d
N208	TMA-5	268	SW	under	767	9,870	6,930	1,230	1,030	288
N235	TMA-5	268	over SW	surface	<d	TRACE	<d	12.7	7.9	<d
N253	TMA-5	268	over SW	0-4	<d	<d	<d	<d	<d	<d
N211	TMA-5	268	over SW	4-mine	<d	<d	<d	<d	<d	<d
N165	TMA-5	268	W-14cm	surface	<d	<d	<d	TRACE	TRACE	<d
N224	TMA-5	268	W-14cm	0-5	<d	<d	<d	<d	<d	<d
N216	TMA-5	268	W-14cm	5-10	<d	<d	<d	<d	<d	<d
N150	TMA-5	268	W-14cm	10-15	<d	<d	<d	<d	<d	<d
N160	TMA-5	268	W-9cm	surface	<d	<d	<d	<d	<d	<d
N259	TMA-5	268	W-9cm	0-5	<d	<d	<d	<d	<d	<d
N204	TMA-5	268	W-9cm	5-10	<d	<d	<d	<d	<d	<d
N250	TMA-5	268	W-9cm	10-15	<d	<d	<d	<d	<d	<d
N215	TMA-5	268	W	surface	<d	<d	<d	<d	<d	<d
N233	TMA-5	268	W	0-5	<d	5.53	<d	1.99	TRACE	<d
N255	TMA-5	268	W	5-8	<d	<d	<d	<d	<d	<d
N151	TMA-5	268	W	8-14	11.9	237	3.9	85.9	130	4.2
N168	TMA-5	268	under SW	0-5	61.6	1,720	326	297	360	46.2
N231	TMA-5	268	under NW	0-6	49.1	2,510	383	540	501	75.2
N231 LG	TMA-5	268	under NW	0-6	39.5	2,630	491	377	496	65.1
N236	TMA-5	268	under center	0-5	10.8	1,800	77.3	1,030	1,030	29.2
N236 LG	TMA-5	268	under center	0-5	7.1	1,650	53.4	838	819	24.7
N214	TMA-5	268	under NW	6-12	2.9	156	3.56	87.6	88.1	4.6
N214 LG	TMA-5	268	under NW	6-12	TRACE	152	8.68	109	104	12.3
N240	TMA-5	268	under center	5- 10	<d	110	45.3	60.3	65.9	<d
N240 LG	TMA-5	268	under center	5- 10	<d	349	6.03	184	198	7.11
N252	TMA-5	268	under SW	5- 11	<d	97.3	4.31	24.2	32.4	<d
N202	TMA-5	268	under NE	on mine	<d	3,640	1,680	1,420	1,270	54.5
N202 LG	TMA-5	268	under NE	on mine	<d	2,760	1,460	1,190	998	45.8
N167	TMA-5	268	NW	0-9	<d	217	8.9	46.1	48.9	<d
N248	TMA-5	268	over center	on mine	<d	13	1.86	<d	TRACE	<d
N157	TMA-5	268	over W	on mine	<d	6.83	2.27	14.2	17.2	<d
N227	TMA-5	268	SE	0-15	<d	375	97.5	191	204	7
N227 LG	TMA-5	268	SE	0-15	<d	534	101	307	327	10.5
N040	TMA-5	267	NE	surface	<d	<d	<d	<d	<d	<d
N035	TMA-5	267	NE	0-5	<d	<d	<d	<d	<d	<d
N033	TMA-5	267	NE	5-10	<d	<d	<d	<d	<d	<d
N039	TMA-5	267	NE	10-15.5	<d	<d	<d	<d	<d	<d
N036	TMA-5	267	NW	surface	<d	<d	<d	<d	<d	<d

Concentration (µg/kg)

2,5-DNT	3,5-DNT	3,4-DNT	3,5-DNA	TNB	3-Nitro Aniline	2,4,5-TNT	1,4-DNB	4-Am-2-NT	m-NT	2,3,4-TNT	1,2-DNB	2,3-DNT	2-Am-4-NT
<d	<d	<d	<d	<d	<d	<d	<d	<d	<d	<d	<d	<d	<d
<d	<d	<d	<d	<d	<d	<d	<d	<d	<d	<d	<d	<d	<d
<d	<d	<d	<d	<d	<d	<d	<d	<d	<d	<d	<d	<d	<d
<d	<d	<d	<d	<d	<d	<d	<d	<d	<d	<d	<d	<d	<d
216	1,050	112	217	1,170	107	105	<d	173	<d	625	<d	<d	172
<d	<d	<d	<d	<d	<d	<d	<d	<d	<d	<d	<d	<d	<d
<d	<d	<d	<d	<d	<d	<d	<d	<d	<d	<d	<d	<d	<d
<d	<d	<d	<d	<d	<d	<d	<d	<d	<d	<d	<d	<d	<d
<d	<d	<d	<d	<d	<d	<d	<d	<d	<d	<d	<d	<d	<d
<d	<d	<d	1.57	<d	<d	<d	<d	TRACE	<d	<d	<d	14.7	<d
<d	<d	<d	<d	<d	<d	<d	<d	<d	<d	<d	<d	<d	<d
<d	<d	<d	<d	<d	<d	<d	<d	<d	<d	<d	<d	<d	<d
<d	<d	<d	<d	<d	TRACE	<d	<d	<d	<d	<d	<d	<d	<d
<d	<d	<d	<d	<d	<d	<d	<d	<d	<d	<d	<d	<d	<d
<d	<d	<d	<d	<d	<d	<d	<d	<d	<d	<d	<d	<d	<d
<d	<d	<d	<d	<d	<d	<d	<d	<d	<d	<d	<d	<d	<d
<d	<d	<d	<d	<d	<d	<d	<d	<d	<d	<d	<d	<d	<d
2	<d	<d	<d	<d	25.7	<d	<d	<d	<d	<d	<d	<d	<d
<d	<d	<d	<d	<d	<d	<d	<d	<d	<d	<d	<d	<d	<d
<d	<d	<d	<d	<d	<d	<d	<d	<d	<d	<d	<d	<d	<d
<d	<d	<d	<d	<d	<d	<d	<d	<d	<d	<d	<d	<d	<d
<d	<d	<d	TRACE	<d	<d	<d	<d	<d	<d	<d	<d	<d	<d
<d	<d	<d	<d	<d	<d	<d	<d	<d	<d	<d	<d	<d	<d
<d	<d	<d	<d	<d	<d	<d	<d	<d	<d	<d	<d	<d	<d
<d	<d	<d	<d	<d	<d	<d	<d	<d	<d	<d	<d	<d	<d
152	574	174	116	726	142	56.4	1.97	198	<d	322	<d	<d	181
<d	<d	<d	<d	<d	<d	<d	13.4	<d	<d	<d	<d	<d	<d
<d	<d	<d	<d	<d	<d	<d	<d	<d	<d	<d	<d	<d	<d
<d	<d	<d	<d	<d	<d	<d	<d	<d	<d	<d	<d	<d	<d
<d	<d	<d	<d	<d	<d	<d	<d	<d	<d	<d	<d	<d	<d
<d	<d	<d	<d	<d	<d	<d	<d	<d	<d	<d	<d	<d	<d
<d	<d	<d	<d	<d	<d	<d	<d	<d	<d	<d	<d	<d	<d
<d	<d	<d	<d	<d	<d	<d	<d	<d	<d	<d	<d	<d	<d
<d	<d	<d	<d	<d	<d	<d	<d	<d	<d	<d	<d	<d	<d
<d	<d	<d	<d	<d	<d	<d	<d	<d	<d	<d	<d	<d	<d
<d	<d	<d	<d	<d	<d	<d	<d	<d	<d	<d	<d	<d	<d
<d	<d	<d	<d	<d	<d	<d	<d	<d	<d	<d	<d	<d	<d
<d	<d	<d	<d	<d	<d	<d	<d	<d	<d	<d	<d	<d	<d
<d	<d	<d	<d	<d	<d	<d	<d	<d	<d	<d	<d	<d	<d
<d	<d	<d	<d	<d	<d	<d	<d	<d	<d	<d	<d	<d	<d
<d	11.8	<d	<d	<d	23	<d	<d	<d	<d	<d	<d	<d	<d
9.79	97.3	2.17	<d	32.4	26.2	<d	<d	<d	<d	<d	<d	<d	<d
11.8	147	3.34	<d	27.5	71.4	1.1	<d	133	<d	4.4	<d	<d	197
13.8	205	16.8	<d	38.6	40	<d	<d	86.3	<d	<d	<d	<d	115
1.76	156	0.835	<d	14.7	93	<d	<d	157	<d	<d	<d	<d	208
<d	150	<d	<d	<d	34.7	<d	<d	80	<d	<d	<d	<d	148
1.09	8.51	<d	<d	<d	12.4	<d	<d	<d	<d	<d	<d	<d	<d
<d	TRACE	<d	<d	<d	19.1	<d	<d	<d	<d	<d	<d	<d	<d
<d	<d	<d	<d	<d	TRACE	<d	<d	<d	<d	<d	<d	<d	<d
<d	231	<d	<d	12.3	20.1	<d	<d	<d	<d	<d	<d	<d	<d
<d	<d	<d	<d	<d	<d	<d	<d	<d	<d	<d	<d	<d	<d
25.7	589	33.2	144	194	123	10	1.18	<d	<d	38	TRACE	<d	<d
23	526	8.9	99.3	154	94	8.46	<d	<d	<d	49	TRACE	<d	<d
<d	13.7	<d	<d	<d	<d	<d	<d	<d	<d	<d	<d	<d	<d
<d	<d	<d	<d	<d	<d	<d	<d	<d	<d	<d	<d	<d	<d
<d	<d	<d	<d	<d	<d	<d	<d	<d	<d	<d	<d	<d	<d
0.98	53.2	<d	<d	10.2	19	<d	<d	<d	<d	<d	<d	<d	<d
<d	80.2	<d	<d	<d	5.2	<d	<d	<d	<d	<d	<d	<d	<d
<d	<d	<d	<d	<d	<d	<d	<d	<d	<d	<d	<d	<d	<d
<d	<d	<d	<d	<d	<d	<d	<d	<d	<d	<d	<d	<d	<d
<d	<d	<d	<d	<d	<d	<d	<d	<d	<d	<d	<d	<d	<d
<d	<d	<d	<d	<d	<d	<d	<d	<d	<d	<d	<d	<d	<d
<d	<d	<d	<d	<d	<d	<d	<d	<d	<d	<d	<d	<d	<d

to contents

Lab sample #	Mine type	EX number	Sample location	Sample depth (cm)	Concentration (µg/kg) 1,3-DNB	2,4-DNT	2,4,6-TNT	4-Am-DNT	2-Am-DNT	2,6-DNT
N028	TMA-5	267	NW	0-6	<d	<d	<d	<d	<d	<d
N038	TMA-5	267	NW	6-10	<d	<d	<d	<d	<d	<d
MISSING	TMA-5	267	NW	10-14						
N030	TMA-5	267	over	surface	<d	<d	<d	<d	<d	<d
N037	TMA-5	267	SE	surface	<d	<d	<d	<d	<d	<d
N034	TMA-5	267	SE	0-5	<d	<d	<d	<d	<d	<d
N031	TMA-5	267	SE	5-9	<d	<d	<d	<d	<d	<d
N029	TMA-5	267	SE	9-15	<d	<d	<d	<d	<d	<d
N025	TMA-5	267	SW	surface	<d	<d	<d	<d	<d	<d
N027	TMA-5	267	SW	0-5	<d	<d	<d	<d	<d	<d
N026	TMA-5	267	SW	5-10	<d	<d	<d	<d	<d	<d
N032	TMA-5	267	SW	10-15	<d	<d	<d	<d	<d	<d
N197	TMA-5	264	NE	surface	<d	0.762	<d	5.7	6.9	<d
N198	TMA-5	264	NE	0-6	27.4	1,200	155	1,200	1,360	18.2
N199	TMA-5	264	NE	6-9	26.9	1,715	184	1,528	1,700	22.4
N193	TMA-5	264	NE	9-14	10	862	154	861	950	11.9
N195	TMA-5	264	NW	surface	<d	<d	<d	<d	6.4	<d
MISSING	TMA-5	264	NW	0-5						
MISSING	TMA-5	264	NW	5-7						
N191	TMA-5	264	over	surface	13.2	51.3	TRACE	59.1	68.2	<d
N192	TMA-5	264	SE	surface	<d	<d	<d	6.43	7.57	<d
MISSING	TMA-5	264	SE	0-6						
N190	TMA-5	264	SE	6-11	<d	120	3.75	222	302	<d
N190 rep	TMA-5	264	SE	6-11	<d	98.8	3.23	191	258	<d
N190 rep	TMA-5	264	SE	6-11	<d	114	3.67	206	272	<d
MISSING	TMA-5	264	SE	11-15						
MISSING	TMA-5	264	SW	surface						
N196	TMA-5	264	SW	0-6	<d	<d	<d	18.1	12.6	<d
N194	TMA-5	264	SW	6-10	<d	<d	<d	12.6	23.3	<d
MISSING	TMA-5	264	SW	10-13						
N002	TMM-1	343	E	surface	<d	<d	<d	<d	<d	<d
N004	TMM-1	343	E	0-5	<d	<d	<d	<d	<d	<d
N007	TMM-1	343	E	5-12	<d	<d	<d	<d	<d	<d
N013	TMM-1	343	N	surface	<d	<d	<d	<d	<d	<d
N010	TMM-1	343	N	0-6	<d	<d	<d	<d	<d	<d
N011	TMM-1	343	N	6-13	<d	<d	<d	<d	<d	<d
N009	TMM-1	343	over	surface	<d	<d	<d	<d	<d	<d
MISSING	TMM-1	343	S	surface						
N003	TMM-1	343	S	0-4	<d	<d	<d	<d	<d	<d
N005	TMM-1	343	S	4-9	<d	<d	<d	<d	<d	<d
N006	TMM-1	343	S	9-13	<d	<d	<d	TRACE	TRACE	<d
N012	TMM-1	343	W	surface	<d	<d	<d	TRACE	TRACE	<d
N008	TMM-1	343	W	0-5	<d	<d	<d	<d	<d	<d
N001	TMM-1	343	W	5-10	<d	<d	<d	<d	<d	<d
N179	TMM-1	313	NE	surface	<d	<d	<d	TRACE	TRACE	<d
N171	TMM-1	313	NE	0-4	<d	<d	<d	<d	<d	<d
N173	TMM-1	313	NE	4-9	<d	<d	<d	<d	<d	<d
N172	TMM-1	313	NW	surface	<d	<d	<d	<d	<d	<d
N176	TMM-1	313	NW	0-4	<d	<d	<d	<d	<d	<d
N181	TMM-1	313	NW	4-9	<d	<d	<d	<d	<d	<d
N174	TMM-1	313	over	surface	<d	<d	<d	<d	<d	<d
N170	TMM-1	313	SE	surface	<d	<d	<d	<d	<d	<d
N175	TMM-1	313	SE	0-4	<d	<d	<d	<d	<d	<d
N182	TMM-1	313	SE	4-9	<d	<d	<d	<d	<d	<d
N177	TMM-1	313	SW	surface	<d	<d	<d	<d	<d	<d
N180	TMM-1	313	SW	0-4	<d	<d	<d	<d	<d	<d
N178	TMM-1	313	SW	4-9	<d	<d	<d	<d	<d	<d

Concentration (µg/kg)

2,5-DNT	3,5-DNT	3,4-DNT	3,5-DNA	TNB	3-Nitro Aniline	2,4,5-TNT	1,4-DNB	4-Am-2-NT	m-NT	2,3,4-TNT	1,2-DNB	2,3-DNT	2-Am-4-NT
<d	<d	<d	<d	<d	<d	<d	<d	<d	<d	<d	<d	<d	<d
<d	<d	<d	<d	<d	<d	<d	<d	<d	<d	<d	<d	<d	<d
<d	<d	<d	<d	<d	<d	<d	<d	<d	<d	<d	<d	<d	<d
<d	<d	<d	<d	<d	<d	<d	<d	<d	<d	<d	<d	<d	<d
<d	<d	<d	<d	<d	<d	<d	<d	<d	<d	<d	<d	<d	<d
<d	<d	<d	<d	<d	<d	<d	<d	<d	<d	<d	<d	<d	<d
<d	<d	<d	<d	<d	<d	<d	<d	<d	<d	<d	<d	<d	<d
<d	<d	<d	<d	<d	<d	<d	<d	<d	<d	<d	<d	<d	<d
<d	<d	<d	<d	<d	<d	<d	<d	<d	<d	<d	<d	<d	<d
<d	<d	<d	<d	<d	<d	<d	<d	<d	<d	<d	<d	<d	<d
<d	<d	<d	<d	<d	<d	<d	<d	<d	<d	<d	<d	<d	<d
<d	93.6	<d	<d	<d	47.5	<d	<d	167	<d	<d	<d	<d	<d
2.3	163	<d	<d	<d	49.5	<d	16.5	146	<d	<d	<d	<d	110
19.6	840	<d	<d	<d	24	<d	<d	<d	<d	<d	<d	<d	<d
<d	<d	<d	<d	<d	10.7	<d	<d	<d	<d	<d	<d	<d	<d
<d	<d	<d	<d	<d	<d	<d	<d	<d	<d	<d	<d	<d	<d
<d	<d	<d	<d	<d	<d	<d	<d	<d	<d	<d	<d	<d	<d
									<d	<d	<d	<d	
<d	<d	<d	<d	<d	35.9	<d	<d	<d	<d	<d	<d	<d	<d
<d	<d	<d	<d	<d	NA	<d	<d	<d	<d	<d	<d	<d	<d
<d	<d	<d	<d	<d	NA	<d	<d	<d	<d	<d	<d	<d	<d
<d	<d	<d	<d	<d	<d	<d	<d	<d	<d	<d	<d	<d	<d
<d	<d	<d	<d	<d	<d	<d	<d	<d	<d	<d	<d	<d	<d
<d	<d	<d	<d	<d	<d	<d	<d	<d	<d	<d	<d	<d	<d
<d	<d	<d	<d	<d	<d	<d	<d	<d	<d	<d	<d	<d	<d
<d	<d	<d	<d	<d	<d	<d	<d	<d	<d	<d	<d	<d	<d
<d	<d	<d	<d	<d	<d	<d	<d	<d	<d	<d	<d	<d	<d
<d	<d	<d	<d	<d	<d	<d	<d	<d	<d	<d	<d	<d	<d
<d	<d	<d	<d	<d	<d	<d	<d	<d	<d	<d	<d	<d	<d
<d	<d	<d	<d	<d	<d	<d	<d	<d	<d	<d	<d	<d	<d
<d	<d	<d	<d	<d	<d	<d	<d	<d	<d	<d	<d	<d	<d
<d	<d	<d	<d	<d	<d	<d	<d	<d	<d	<d	<d	<d	<d
<d	<d	<d	<d	<d	<d	<d	<d	<d	<d	<d	<d	<d	<d
<d	<d	<d	<d	<d	<d	<d	<d	<d	<d	<d	<d	<d	<d
<d	<d	<d	<d	<d	<d	<d	<d	<d	<d	<d	<d	<d	<d
<d	<d	<d	<d	<d	<d	<d	<d	<d	<d	<d	<d	<d	<d
<d	<d	<d	<d	<d	<d	<d	<d	<d	<d	<d	<d	<d	<d
<d	<d	<d	<d	<d	<d	<d	<d	<d	<d	<d	<d	<d	<d
<d	<d	<d	<d	<d	<d	<d	<d	<d	<d	<d	<d	<d	<d
<d	<d	<d	<d	<d	<d	<d	<d	<d	<d	<d	<d	<d	<d
<d	<d	<d	<d	<d	<d	<d	<d	<d	<d	<d	<d	<d	<d
<d	<d	<d	<d	<d	<d	<d	<d	<d	<d	<d	<d	<d	<d
<d	<d	<d	<d	<d	<d	<d	<d	<d	<d	<d	<d	<d	<d
<d	<d	<d	<d	<d	<d	<d	<d	<d	<d	<d	<d	<d	<d
<d	<d	<d	<d	<d	<d	<d	<d	<d	<d	<d	<d	<d	<d
<d	<d	<d	<d	<d	<d	<d	<d	<d	<d	<d	<d	<d	<d
<d	<d	<d	<d	<d	<d	<d	<d	<d	<d	<d	<d	<d	<d
<d	<d	<d	<d	<d	<d	<d	<d	<d	<d	<d	<d	<d	<d
<d	<d	<d	<d	<d	<d	<d	<d	<d	<d	<d	<d	<d	<d

to contents

APPENDIX C: ANALYTICAL RESULTS FOR SOIL SAMPLES COLLECTED AT THE FORT LEONARD WOOD RESEARCH MINEFIELD, APRIL 1999

					Concentration (µg/kg)					
Lab sample #	*Mine type*	*EX number*	*Sample location*	*Sample depth, cm*	*1,3-DNB*	*2,4-DNT*	*2,4,6-TNT*	*4-Am-DNT*	*2-Am-DNT*	*2,6-DNT*
A1	PMA-2	126	over center	surface	<d	<d	<d	<d	<d	<d
A2	PMA-2	126	over center	0-3	<d	17.8	<d	<d	<d	<d
A3	PMA-2	126	over center	3-6	NA	NA	NA	NA	NA	NA
A4	PMA-2	126	NE	surface	<d	<d	<d	<d	<d	<d
A5	PMA-2	126	NE	0-3	<d	<d	<d	<d	<d	<d
A6	PMA-2	126	NE	3-6	<d	<d	3.38	<d	<d	<d
A7	PMA-2	126	SE	surface	<d	<d	<d	<d	<d	<d
A8	PMA-2	126	SE	0-3	<d	<d	<d	<d	<d	<d
A9	PMA-2	126	SE	3-6	<d	<d	<d	<d	<d	<d
A10	PMA-2	126	SW	surface	<d	<d	<d	<d	<d	<d
A11	PMA-2	126	SW	0-3	<d	<d	<d	<d	<d	<d
A12	PMA-2	126	SW	3-6	<d	<d	<d	<d	<d	<d
A13	PMA-2	126	NW	surface	<d	<d	<d	<d	<d	<d
A14	PMA-2	126	NW	0-3	<d	<d	5.12	<d	<d	<d
A15	PMA-2	126	NW	3-6	<d	<d	<d	<d	<d	<d
A16	PMA-2	126	NE-7cm	surface	<d	<d	<d	<d	<d	<d
A17	PMA-2	126	SE-7cm	surface	<d	<d	<d	<d	<d	<d
A18	PMA-2	126	SW-7cm	surface	<d	<d	<d	<d	<d	<d
A19	PMA-2	126	NW-7cm	surface	<d	<d	<d	<d	<d	<d
A20	PMA-2	126	center	under	<d	7.99	<d	<d	<d	<d
A21	PMA-2	142	over center	surface	<d	<d	<d	<d	<d	<d
A22	PMA-2	142	over center	0-3	<d	<d	<d	<d	<d	<d
A23	PMA-2	142	over center	3-6	<d	<d	<d	<d	<d	<d
A24	PMA-2	142	NE	surface	<d	<d	<d	<d	<d	<d
A25	PMA-2	142	NE	0-3	<d	<d	<d	<d	<d	<d
A26	PMA-2	142	NE	3-6	<d	<d	<d	<d	<d	<d
A27	PMA-2	142	SE	surface	<d	<d	<d	<d	<d	<d
A28	PMA-2	142	SE	0-3	<d	<d	<d	<d	<d	<d
A29	PMA-2	142	SE	3-6	<d	<d	<d	<d	<d	<d
A30	PMA-2	142	SW	surface	<d	<d	<d	<d	<d	<d
A31	PMA-2	142	SW	0-3	<d	<d	<d	<d	<d	<d
A32	PMA-2	142	SW	3-6	<d	<d	<d	<d	<d	<d
A33	PMA-2	142	NW	surface	<d	<d	<d	<d	<d	<d
A34	PMA-2	142	NW	0-3	<d	<d	<d	<d	<d	<d
A35	PMA-2	142	NW	3-6	<d	<d	<d	<d	<d	<d
A36	PMA-2	142	NE-7cm	surface	<d	<d	<d	<d	<d	<d
A37	PMA-2	142	SE-7cm	surface	<d	<d	<d	<d	<d	<d
A38	PMA-2	142	SW-7cm	surface	<d	<d	<d	<d	<d	<d
A39	PMA-2	142	NW-7cm	surface	<d	<d	<d	<d	<d	<d
A40	PMA-2	142	center	under	<d	<d	<d	<d	<d	<d
A41	PMA-1A	20	W-over	surface	<d	<d	<d	<d	<d	<d
A42	PMA-1A	20	E-over	surface	<d	<d	<d	<d	<d	<d
A43	PMA-1A	20	E-over	0-2 cm	<d	<d	<d	<d	<d	<d
A44	PMA-1A	20	NE	surface	<d	<d	<d	139	97.1	<d
A45	PMA-1A	20	NE	0-2.5	<d	<d	<d	<d	<d	<d
A46	PMA-1A	20	NE	2.5-5	<d	2.86	<d	15.7	8.7	<d
A47	PMA-1A	20	SE	surface	<d	<d	<d	<d	<d	<d
A48	PMA-1A	20	SE	0-2.5	34	115	31.6	566	469	<d
A49	PMA-1A	20	SE	2.5-5	18.8	86.8	19	413	431	<d
A50	PMA-1A	20	SW	surface	<d	<d	<d	<d	<d	<d
A51	PMA-1A	20	SW	0-2.5	<d	<d	<d	21.1	16.4	<d
A52	PMA-1A	20	SW	2.5-5	<d	6.08	<d	17.2	18.3	<d
A53	PMA-1A	20	NW	surface	<d	<d	<d	<d	<d	<d
A54	PMA-1A	20	NW	0-2.5	<d	<d	<d	<d	<d	<d
A55	PMA-1A	20	NW	2.5-5	<d	<d	<d	<d	<d	<d
A56	PMA-1A	20	NE-7cm	surface	<d	6.26	3.3	<d	4.09	<d
A57	PMA-1A	20	SE-7cm	surface	<d	8.6	3.26	37.8	44	<d
A58	PMA-1A	20	SW-7cm	surface	<d	<d	<d	98.8	61.2	<d
A59	PMA-1A	20	NW-7cm	surface	<d	<d	<d	<d	<d	<d
A60	PMA-1A	20	center	under	20.9	39.1	23.3	81.1	77.1	<d
A61	PMA-1A	25	SW over	surface	<d	<d	<d	<d	<d	<d
A62	PMA-1A	25	NE over	surface	<d	<d	<d	<d	<d	<d

to contents

Concentration (µg/kg)

RDX	*2,5-DNT*	*3,5-DNT*	*3,4-DNT*	*3,5-DNA*	*TNB*	*2,4,5-TNT*	*1,4-DNB*	*m-NT*	*2,3,4-TNT*	*1,2-DNB*	*2,3-DNT*
<d	<d	<d	<d	<d	<d	<d	<d	<d	<d	<d	<d
<d	<d	<d	<d	<d	<d	<d	<d	<d	<d	<d	<d
NA	NA	NA	NA	NA	NA	NA	NA	NA	NA	NA	NA
<d	<d	<d	<d	<d	<d	<d	<d	<d	<d	<d	<d
<d	<d	<d	<d	<d	<d	<d	<d	<d	<d	<d	<d
<d	<d	<d	<d	<d	<d	<d	<d	<d	<d	<d	<d
<d	<d	<d	<d	<d	<d	<d	<d	<d	<d	<d	<d
<d	<d	<d	<d	<d	<d	<d	<d	<d	<d	<d	<d
<d	<d	<d	<d	<d	<d	<d	<d	<d	<d	<d	<d
<d	<d	<d	<d	<d	<d	<d	<d	<d	<d	<d	<d
<d	<d	<d	<d	<d	<d	<d	<d	<d	<d	<d	<d
<d	<d	<d	<d	<d	<d	<d	<d	<d	<d	<d	<d
<d	<d	<d	<d	<d	<d	<d	<d	<d	<d	<d	<d
<d	<d	<d	<d	<d	<d	<d	<d	<d	<d	<d	<d
<d	<d	<d	<d	<d	<d	<d	<d	<d	<d	<d	<d
<d	<d	<d	<d	<d	<d	<d	<d	<d	<d	<d	<d
<d	<d	<d	<d	<d	<d	<d	<d	<d	<d	<d	<d
<d	<d	<d	<d	<d	<d	<d	<d	<d	<d	<d	<d
<d	<d	<d	<d	<d	<d	<d	<d	<d	<d	<d	<d
<d	<d	<d	<d	<d	<d	<d	<d	<d	<d	<d	<d
<d	<d	<d	<d	<d	<d	<d	<d	<d	<d	<d	<d
<d	<d	<d	<d	<d	<d	<d	<d	<d	<d	<d	<d
<d	<d	<d	<d	<d	<d	<d	<d	<d	<d	<d	<d
<d	<d	<d	<d	<d	<d	<d	<d	<d	<d	<d	<d
<d	<d	<d	<d	<d	<d	<d	<d	<d	<d	<d	<d
<d	<d	<d	<d	<d	<d	<d	<d	<d	<d	<d	<d
<d	<d	<d	<d	<d	<d	<d	<d	<d	<d	<d	<d
<d	<d	<d	<d	<d	<d	<d	<d	<d	<d	<d	<d
<d	<d	<d	<d	<d	<d	<d	<d	<d	<d	<d	<d
<d	<d	<d	<d	<d	<d	<d	<d	<d	<d	<d	<d
<d	<d	<d	<d	<d	<d	<d	<d	<d	<d	<d	<d
<d	<d	<d	<d	<d	<d	<d	<d	<d	<d	<d	<d
<d	<d	<d	<d	<d	<d	<d	<d	<d	<d	<d	<d
<d	<d	<d	<d	<d	<d	<d	<d	<d	<d	<d	<d
<d	<d	<d	<d	<d	<d	<d	<d	<d	<d	<d	<d
<d	<d	<d	<d	<d	<d	<d	<d	<d	<d	<d	<d
<d	<d	<d	<d	<d	<d	<d	<d	<d	<d	<d	<d
<d	<d	<d	<d	<d	<d	<d	<d	<d	<d	<d	<d
<d	<d	<d	<d	<d	<d	<d	<d	<d	<d	<d	<d
<d	<d	<d	<d	<d	<d	<d	<d	<d	<d	<d	<d
<d	<d	<d	<d	<d	<d	<d	<d	<d	<d	<d	<d
<d	<d	<d	<d	<d	<d	<d	<d	<d	<d	<d	<d
<d	<d	<d	<d	<d	<d	<d	<d	<d	<d	<d	<d
<d	<d	<d	<d	<d	<d	<d	<d	<d	<d	<d	<d
<d	<d	<d	<d	<d	<d	<d	<d	<d	<d	<d	<d
<d	<d	<d	<d	<d	<d	<d	<d	<d	<d	<d	<d
<d	<d	<d	<d	<d	<d	<d	<d	<d	<d	<d	<d
<d	1.6	13.5	<d	<d	<d	<d	<d	<d	<d	<d	<d
<d	1.39	8.68	<d	<d	<d	<d	<d	<d	<d	<d	<d
<d	<d	<d	<d	<d	<d	<d	<d	<d	<d	<d	<d
<d	<d	<d	<d	<d	<d	<d	<d	<d	<d	<d	<d
<d	<d	<d	<d	<d	<d	<d	<d	<d	<d	<d	<d
<d	<d	<d	<d	<d	<d	<d	<d	<d	<d	<d	<d
<d	<d	<d	<d	<d	<d	<d	<d	<d	<d	<d	<d
<d	<d	<d	<d	<d	<d	<d	<d	<d	<d	<d	<d
<d	<d	<d	<d	<d	<d	<d	<d	<d	<d	<d	<d
<d	<d	<d	<d	<d	<d	<d	<d	<d	<d	<d	<d
<d	<d	<d	<d	<d	<d	<d	<d	<d	<d	<d	<d
<d	<d	<d	<d	<d	<d	<d	<d	<d	<d	<d	<d
<d	<d	5.54	<d	<d	<d	<d	<d	<d	<d	<d	<d
<d	<d	<d	<d	<d	<d	<d	<d	<d	<d	<d	<d
<d	<d	<d	<d	<d	<d	<d	<d	<d	<d	<d	<d

Lab sample #	Mine type	EX number	Sample location	Sample depth, cm	Concentration (µg/kg) 1,3-DNB	2,4-DNT	2,4,6-TNT	4-Am-DNT	2-Am-DNT	2,6-DNT
A63	PMA-1A	25	NE over	0-2 cm	<d	<d	<d	<d	<d	<d
A64	PMA-1A	25	N	surface	<d	<d	<d	<d	<d	<d
A65	PMA-1A	25	N	0-2.5	<d	<d	<d	<d	<d	<d
A66	PMA-1A	25	N	2.5-5	<d	<d	<d	<d	<d	<d
A67	PMA-1A	25	E	surface	<d	<d	<d	14.6	17.7	<d
A68	PMA-1A	25	E	0-2.5	<d	15.6	1.92	26.5	7.62	<d
A69	PMA-1A	25	E	2.5-5	<d	<d	<d	<d	<d	<d
A70	PMA-1A	25	S	surface	<d	58.3	<d	357	357	<d
A71	PMA-1A	25	S	0-2.5	20.6	93.1	129	246	209	<d
A72	PMA-1A	25	S	2.5-5	<d	7.55	16.7	15.5	11.4	<d
A73	PMA-1A	25	W	surface	<d	<d	12.4	134	42.3	<d
A74	PMA-1A	25	W	0-2.5	10	32.4	<d	34	18	4.22
A75	PMA-1A	25	W	2.5-5	2.6	7.18	3.06	16.2	5.68	<d
A76	PMA-1A	25	N-7cm	surface	<d	<d	<d	<d	<d	<d
A77	PMA-1A	25	E-7cm	surface	<d	<d	<d	<d	<d	<d
A78	PMA-1A	25	S-7cm	surface	<d	<d	<d	<d	<d	<d
A79	PMA-1A	25	W-7cm	surface	<d	<d	<d	<d	<d	<d
A80	PMA-1A	25	center	under	46	115	58.1	212	168	<d
A81	TMA-5	274	over center	surface	<d	<d	<d	<d	<d	<d
A82	TMA-5	274	over center	0-5	<d	5.67	4.21	1.84	7.49	<d
A83	TMA-5	274	over center	5-10	<d	<d	<d	<d	<d	<d
A84	TMA-5	274	over center	10-15	NA	NA	NA	NA	NA	NA
A85	TMA-5	274	NE	surface	<d	<d	<d	<d	<d	<d
A86	TMA-5	274	NE	0-5	<d	<d	4.25	<d	<d	<d
A87	TMA-5	274	NE	5-10	17.7	266	26.8	149	222	3.11
A88	TMA-5	274	NE	10-15	79	566	49	316	369	7.01
A89	TMA-5	274	SE	surface	<d	6.21	2.65	16.8	17	<d
A90	TMA-5	274	SE	0-5	2.11	96	28.2	94.5	146	<d
A91	TMA-5	274	SE	5-10	10.4	383	155	300	452	3.01
A92	TMA-5	274	SE	10-15	146	1,123	1,533	790	806	11.7
A93	TMA-5	274	SW	surface	<d	<d	6.21	16.6	11.5	<d
A94	TMA-5	274	SW	0-5	<d	7.38	14.8	29.7	27.5	<d
A95	TMA-5	274	SW	5-10	62.7	592	184	572	641	5.54
A96	TMA-5	274	SW	10-15	267	1,446	1,443	1,316	1,465	12.9
A97	TMA-5	274	NW	surface	<d	<d	4.33	10.2	7.38	<d
A98	TMA-5	274	NW	0-5	<d	3.35	1.83	13.1	5.9	1.45
A99	TMA-5	274	NW	5-10	<d	7.08	3.6	15.7	19.1	<d
A100	TMA-5	274	NW	10-15	32.9	261	162	214	249	3.54
A101	TMA-5	274	NE-7cm	surface	<d	<d	8.64	2.32	4.16	0.7
A102	TMA-5	274	E	surface	<d	<d	<d	<d	<d	<d
A103	TMA-5	274	E-7	surface	<d	<d	<d	<d	<d	<d
A104	TMA-5	274	SE-7cm	surface	<d	21.1	29.1	85.8	97.2	1.79
A105	TMA-5	274	S	surface	<d	<d	1.68	3.25	<d	<d
A106	TMA-5	274	S-7	surface	<d	<d	1.27	2.42	4.54	<d
A107	TMA-5	274	SW-7cm	surface	<d	<d	2.04	<d	<d	<d
A108	TMA-5	274	W	surface	<d	<d	1.95	<d	<d	<d
A109	TMA-5	274	W-7cm	surface	<d	<d	1.88	<d	<d	<d
A110	TMA-5	274	NW-7	surface	<d	<d	<d	<d	<d	<d
A111	TMA-5	274	N	surface	<d	<d	0.8	<d	<d	<d
A112	TMA-5	274	N-7cm	surface	<d	<d	1.09	<d	<d	<d
A113	TMA-5	274	random	under	1,126	3,373	11,426	906	1,325	<d
A114	TMA-5	274	random	under	936	2,848	9,721	936	1,291	<d
A115	TMA-5	274	random	under	1,095	2,864	9,760	849	1,297	<d
A116	TMA-5	275	over center	surface	<d	3.4	13.8	9.61	9.04	<d
A117	TMA-5	275	over center	0-5	<d	<d	11.8	<d	<d	<d
A118	TMA-5	275	over center	5-10	<d	3.43	6.34	<d	<d	<d
A119	TMA-5	275	over center	10-15	<d	13.1	18.2	14.4	23.1	<d
A120	TMA-5	275	NE	surface	<d	<d	<d	<d	<d	<d
A121	TMA-5	275	NE	0-5	<d	<d	12.9	<d	10.1	<d
A122	TMA-5	275	NE	5-10	<d	<d	7.41	<d	<d	<d
A123	TMA-5	275	NE	10-15	6.93	75.8	25.6	40.1	41.6	1.42
A124	TMA-5	275	SE	surface	<d	<d	<d	<d	<d	<d
A125	TMA-5	275	SE	0-5	<d	<d	<d	<d	<d	<d

					Concentration (µg/kg)						
RDX	*2,5-DNT*	*3,5-DNT*	*3,4-DNT*	*3,5-DNA*	*TNB*	*2,4,5-TNT*	*1,4-DNB*	*m-NT*	*2,3,4-TNT*	*1,2-DNB*	*2,3-DNT*
<d	<d	<d	<d	<d	<d	<d	<d	<d	<d	<d	<d
<d	<d	<d	<d	<d	<d	<d	<d	<d	<d	<d	<d
<d	<d	<d	<d	<d	<d	<d	<d	<d	<d	<d	<d
<d	<d	<d	<d	<d	<d	<d	<d	<d	<d	<d	<d
<d	<d	<d	<d	<d	<d	<d	<d	<d	<d	<d	<d
<d	<d	10.3	<d	<d	<d	<d	<d	<d	<d	<d	<d
<d	<d	<d	<d	<d	<d	<d	<d	<d	<d	<d	<d
<d	<d	<d	<d	<d	<d	<d	<d	<d	<d	<d	<d
<d	<d	<d	<d	<d	10.7	<d	<d	<d	<d	<d	<d
<d	<d	<d	<d	<d	<d	<d	<d	<d	<d	<d	<d
<d	<d	<d	<d	<d	<d	<d	<d	<d	<d	<d	<d
<d	<d	<d	<d	<d	<d	<d	<d	<d	<d	<d	<d
<d	<d	<d	<d	<d	<d	<d	<d	<d	<d	<d	<d
<d	<d	<d	<d	<d	<d	<d	<d	<d	<d	<d	<d
<d	<d	<d	<d	<d	<d	<d	<d	<d	<d	<d	<d
<d	<d	<d	<d	<d	<d	<d	<d	<d	<d	<d	<d
<d	<d	<d	<d	<d	<d	<d	<d	<d	<d	<d	<d
<d	0.945	14.9	<d	<d	<d	<d	<d	<d	<d	<d	<d
<d	<d	<d	<d	<d	<d	<d	<d	<d	<d	<d	<d
<d	<d	<d	<d	<d	<d	<d	<d	<d	<d	<d	<d
<d	<d	<d	<d	<d	<d	<d	<d	<d	<d	<d	<d
NA	NA	NA	NA	NA	NA	NA	NA	NA	NA	NA	NA
<d	<d	<d	<d	<d	<d	<d	<d	<d	<d	<d	<d
<d	<d	<d	<d	<d	<d	<d	<d	<d	<d	<d	<d
<d	<d	19.1	<d	<d	<d	<d	<d	<d	<d	<d	<d
<d	0.888	64.5	<d	<d	<d	3.22	<d	<d	<d	<d	<d
<d	<d	<d	<d	<d	<d	<d	<d	<d	<d	<d	<d
<d	1.14	9.27	<d	<d	<d	<d	<d	<d	<d	<d	<d
<d	3.83	37	<d	<d	<d	4.5	<d	<d	<d	<d	<d
<d	11	197	2.7	<d	17	20.2	<d	<d	2.9	<d	<d
<d	<d	<d	<d	<d	<d	<d	<d	<d	<d	<d	<d
<d	<d	<d	<d	<d	<d	<d	<d	<d	<d	<d	<d
<d	2.67	106	<d	<d	<d	7.02	<d	<d	<d	<d	<d
<d	7.5	344	14.7	<d	<d	24.7	<d	<d	2.5	<d	<d
<d	<d	<d	<d	<d	<d	<d	<d	<d	<d	<d	<d
<d	<d	<d	<d	<d	<d	<d	<d	<d	<d	<d	<d
<d	<d	<d	<d	<d	<d	<d	<d	<d	<d	<d	<d
<d	2	49.5	<d	<d	<d	7.67	<d	<d	<d	<d	<d
<d	<d	<d	<d	<d	<d	<d	<d	<d	<d	<d	<d
<d	<d	<d	<d	<d	<d	<d	<d	<d	<d	<d	<d
<d	<d	<d	<d	<d	<d	<d	<d	<d	<d	<d	<d
<d	<d	2.39	<d	<d	<d	<d	<d	<d	<d	<d	<d
<d	<d	<d	<d	<d	<d	<d	<d	<d	<d	<d	<d
<d	<d	<d	<d	<d	<d	<d	<d	<d	<d	<d	<d
<d	<d	<d	<d	<d	<d	<d	<d	<d	<d	<d	<d
<d	<d	<d	<d	<d	<d	<d	<d	<d	<d	<d	<d
<d	<d	<d	<d	<d	<d	<d	<d	<d	<d	<d	<d
<d	<d	<d	<d	<d	<d	<d	<d	<d	<d	<d	<d
<d	<d	<d	<d	<d	<d	<d	<d	<d	<d	<d	<d
<d	<d	<d	<d	<d	<d	<d	<d	<d	<d	<d	<d
<d	117	946	<d	270	2,413	648	3.55	<d	1,269	75.5	<d
<d	85	790	<d	251	1,679	350	2.1	<d	808	62.5	<d
<d	82.9	813	89.9	288	2,126	592	2.79	<d	1,053	65.9	<d
<d	<d	<d	<d	<d	<d	<d	<d	<d	<d	<d	<d
<d	<d	<d	<d	<d	<d	<d	<d	<d	<d	<d	<d
<d	<d	<d	<d	<d	<d	<d	<d	<d	<d	<d	<d
<d	<d	<d	<d	<d	<d	<d	<d	<d	<d	<d	<d
<d	<d	<d	<d	<d	<d	<d	<d	<d	<d	<d	<d
<d	<d	<d	<d	<d	<d	<d	<d	<d	<d	<d	<d
<d	<d	<d	<d	<d	<d	<d	<d	<d	<d	<d	<d
<d	0.714	6	<d	<d	<d	<d	<d	<d	<d	1.17	<d
<d	<d	<d	<d	<d	<d	<d	<d	<d	<d	<d	<d
<d	<d	<d	<d	<d	<d	<d	<d	<d	<d	<d	<d

to contents

Lab sample #	Mine type	EX number	Sample location	Sample depth, cm	Concentration (µg/kg) 1,3-DNB	2,4-DNT	2,4,6-TNT	4-Am-DNT	2-Am-DNT	2,6-DNT
A126	TMA-5	275	SE	5-10	<d	<d	8.37	<d	2.53	<d
A127	TMA-5	275	SE	10-15	<d	28	15.8	41.9	26	2.48
A128	TMA-5	275	SW	surface	<d	<d	<d	<d	<d	<d
A129	TMA-5	275	SW	0-5	<d	15.1	7.9	27	30	2.27
A130	TMA-5	275	SW	5-10	232	771	2,019	582	566	11.7
A131	TMA-5	275	SW	10-15	<d	<d	<d	<d	<d	<d
A132	TMA-5	275	NW	surface	<d	<d	<d	<d	<d	<d
A133	TMA-5	275	NW	0-5	<d	13.5	5.5	21.2	23.8	1.19
A134	TMA-5	275	NW	5-10	100	609	280	705	849	17.5
A135	TMA-5	275	NW	10-15	334	702	3,871	220	259	<d
A136	TMA-5	275	NE-7cm	surface	<d	<d	<d	<d	<d	<d
A137	TMA-5	275	E	surface	<d	<d	<d	<d	<d	<d
A138	TMA-5	275	E-7	surface	<d	<d	<d	<d	<d	<d
A139	TMA-5	275	SE-7cm	surface	<d	<d	<d	<d	<d	<d
A140	TMA-5	275	S	surface	<d	<d	<d	<d	<d	<d
A141	TMA-5	275	S-7cm	surface	<d	<d	<d	<d	<d	<d
A142	TMA-5	275	SW-7cm	surface	<d	<d	<d	<d	<d	<d
A143	TMA-5	275	W	surface	4.88	44.8	7.49	60.6	66.7	1.96
A144	TMA-5	275	W-7cm	surface	<d	95.6	43.6	146	135	1.58
A145	TMA-5	275	NW-7cm	surface	<d	60.2	<d	57.9	71.3	7.23
A146	TMA-5	275	N	surface	<d	<d	<d	<d	<d	<d
A147	TMA-5	275	N-7cm	surface	<d	<d	<d	<d	<d	<d
A148	TMA-5	275	random	under	680	1,574	3,999	385	476	<d
A149	TMA-5	275	random	under	476	1,050	4,279	285	271	<d
A150	TMA-5	275	random	under	1,401	2,809	5,732	268	359	<d
A151	TMM-1	315	over center	surface	<d	<d	<d	<d	<d	<d
A152	TMM-1	315	over center	0-5	<d	<d	<d	<d	<d	<d
A153	TMM-1	315	over center	5-10	<d	<d	<d	<d	<d	<d
A154	TMM-1	315	over center	10-15	<d	<d	<d	<d	<d	<d
A155	TMM-1	315	NE	surface	<d	<d	<d	<d	<d	<d
A156	TMM-1	315	NE	0-5	<d	<d	<d	<d	<d	<d
A157	TMM-1	315	NE	5-10	<d	<d	<d	<d	<d	<d
A158	TMM-1	315	NE	10-15	<d	<d	11.3	<d	5.61	<d
A159	TMM-1	315	SE	surface	<d	<d	<d	<d	<d	<d
A160	TMM-1	315	SE	0-5	<d	<d	<d	<d	<d	<d
A161	TMM-1	315	SE	5-10	NA	NA	NA	NA	NA	NA
A162	TMM-1	315	SE	10-15	NA	NA	NA	NA	NA	NA
A163	TMM-1	315	SW	surface	<d	<d	<d	<d	<d	<d
A164	TMM-1	315	SW	0-5	<d	<d	<d	<d	<d	<d
A165	TMM-1	315	SW	5-10	<d	<d	<d	<d	<d	<d
A166	TMM-1	315	SW	10-15	<d	<d	<d	<d	<d	<d
A167	TMM-1	315	NW	surface	<d	<d	<d	<d	<d	<d
A168	TMM-1	315	NW	0-5	<d	<d	<d	<d	<d	<d
A169	TMM-1	315	NW	5-10	<d	<d	<d	<d	<d	<d
A170	TMM-1	315	NW	10-15	NA	NA	NA	NA	NA	NA
A171	TMM-1	315	NE-7cm	surface	<d	<d	<d	<d	<d	<d
A172	TMM-1	315	E	surface	<d	<d	<d	<d	<d	<d
A173	TMM-1	315	E-7cm	surface	<d	<d	<d	<d	<d	<d
A174	TMM-1	315	SE-7cm	surface	<d	<d	<d	<d	<d	<d
A175	TMM-1	315	S	surface	<d	<d	<d	<d	<d	<d
A176	TMM-1	315	S-7cm	surface	<d	<d	<d	<d	<d	<d
A177	TMM-1	315	SW-7cm	surface	<d	<d	<d	<d	<d	<d
A178	TMM-1	315	W	surface	<d	<d	<d	<d	<d	<d
A179	TMM-1	315	W-7cm	surface	<d	<d	<d	<d	<d	<d
A180	TMM-1	315	NW-7cm	surface	<d	<d	<d	<d	<d	<d
A181	TMM-1	315	N	surface	<d	<d	<d	<d	<d	<d
A182	TMM-1	315	N-7cm	surface	<d	<d	<d	<d	<d	<d
A183	TMM-1	315	random	under	<d	<d	<d	<d	<d	<d
A184	TMM-1	315	random	under	<d	<d	<d	<d	<d	<d
A185	TMM-1	315	random	under	<d	<d	<d	<d	<d	<d
A186	TMM-1	329	over center	surface	<d	<d	<d	<d	<d	<d
A187	TMM-1	329	over center	0-5	<d	<d	<d	<d	<d	<d
A188	TMM-1	329	over center	5-10	<d	<d	<d	<d	<d	<d
A189	TMM-1	329	over center	10-15	NA	NA	NA	NA	NA	NA

						Concentration (µg/kg)					
RDX	*2,5-DNT*	*3,5-DNT*	*3,4-DNT*	*3,5-DNA*	*TNB*	*2,4,5-TNT*	*1,4-DNB*	*m-NT*	*2,3,4-TNT*	*1,2-DNB*	*2,3-DNT*
<d	<d	<d	<d	<d	<d	<d	<d	<d	<d	<d	<d
<d	<d	<d	<d	<d	<d	<d	<d	<d	<d	<d	<d
<d	<d	<d	<d	<d	<d	<d	<d	<d	<d	<d	<d
<d	<d	<d	<d	<d	<d	<d	<d	<d	<d	<d	<d
<d	10.5	108	<d	<d	348	<d	<d	<d	<d	9.13	<d
<d	<d	<d	<d	<d	<d	<d	<d	<d	<d	<d	<d
<d	<d	<d	<d	<d	<d	<d	<d	<d	<d	<d	<d
<d	<d	<d	<d	<d	<d	<d	<d	<d	<d	<d	<d
<d	9.74	82.1	<d	<d	35.1	<d	<d	<d	<d	14.4	<d
<d	25.9	171	<d	112.1	1,184	290	1.9	<d	449	29.4	<d
<d	<d	<d	<d	<d	<d	<d	<d	<d	<d	<d	<d
<d	<d	<d	<d	<d	<d	<d	<d	<d	<d	<d	<d
<d	<d	<d	<d	<d	<d	<d	<d	<d	<d	<d	<d
<d	<d	<d	<d	<d	<d	<d	<d	<d	<d	<d	<d
<d	<d	<d	<d	<d	<d	<d	<d	<d	<d	<d	<d
<d	<d	<d	<d	<d	<d	<d	<d	<d	<d	<d	<d
<d	<d	<d	<d	<d	<d	<d	<d	<d	<d	<d	<d
<d	1.69	14.8	7.98	<d	<d	<d	<d	<d	<d	1.6	<d
<d	<d	<d	<d	<d	<d	<d	<d	<d	<d	<d	<d
<d	<d	<d	<d	<d	<d	<d	<d	<d	<d	<d	<d
<d	<d	<d	<d	<d	<d	<d	<d	<d	<d	<d	<d
<d	<d	<d	<d	<d	<d	<d	<d	<d	<d	<d	<d
<d	41.4	249	<d	291	1,115	22.9	<d	<d	400	62.9	<d
<d	43.2	248	<d	189	1,941	229	2.59	<d	700	47.2	<d
<d	108.3	369	<d	319	2,612	63.9	5.83	<d	950	125	<d
<d	<d	<d	<d	<d	<d	<d	<d	<d	<d	<d	<d
<d	<d	<d	<d	<d	<d	<d	<d	<d	<d	<d	<d
<d	<d	<d	<d	<d	<d	<d	<d	<d	<d	<d	<d
<d	<d	<d	<d	<d	<d	<d	<d	<d	<d	<d	<d
<d	<d	<d	<d	<d	<d	<d	<d	<d	<d	<d	<d
<d	<d	<d	<d	<d	<d	<d	<d	<d	<d	<d	<d
<d	<d	<d	<d	<d	<d	<d	<d	<d	<d	<d	<d
<d	<d	<d	<d	<d	<d	<d	<d	<d	<d	<d	<d
<d	<d	<d	<d	<d	<d	<d	<d	<d	<d	<d	<d
<d	<d	<d	<d	<d	<d	<d	<d	<d	<d	<d	<d
NA	NA	NA	NA	NA	NA	NA	NA	NA	NA	NA	NA
NA	NA	NA	NA	NA	NA	NA	NA	NA	NA	NA	NA
<d	<d	<d	<d	<d	<d	<d	<d	<d	<d	<d	<d
<d	<d	<d	<d	<d	<d	<d	<d	<d	<d	<d	<d
<d	<d	<d	<d	<d	<d	<d	<d	<d	<d	<d	<d
<d	<d	<d	<d	<d	<d	<d	<d	<d	<d	<d	<d
<d	<d	<d	<d	<d	<d	<d	<d	<d	<d	<d	<d
<d	<d	<d	<d	<d	<d	<d	<d	<d	<d	<d	<d
<d	<d	<d	<d	<d	<d	<d	<d	<d	<d	<d	<d
NA	NA	NA	NA	NA	NA	NA	NA	NA	NA	NA	NA
<d	<d	<d	<d	<d	<d	<d	<d	<d	<d	<d	<d
<d	<d	<d	<d	<d	<d	<d	<d	<d	<d	<d	<d
<d	<d	<d	<d	<d	<d	<d	<d	<d	<d	<d	<d
<d	<d	<d	<d	<d	<d	<d	<d	<d	<d	<d	<d
<d	<d	<d	<d	<d	<d	<d	<d	<d	<d	<d	<d
<d	<d	<d	<d	<d	<d	<d	<d	<d	<d	<d	<d
<d	<d	<d	<d	<d	<d	<d	<d	<d	<d	<d	<d
<d	<d	<d	<d	<d	<d	<d	<d	<d	<d	<d	<d
<d	<d	<d	<d	<d	<d	<d	<d	<d	<d	<d	<d
<d	<d	<d	<d	<d	<d	<d	<d	<d	<d	<d	<d
<d	<d	<d	<d	<d	<d	<d	<d	<d	<d	<d	<d
<d	<d	<d	<d	<d	<d	<d	<d	<d	<d	<d	<d
<d	<d	<d	<d	<d	<d	<d	<d	<d	<d	<d	<d
<d	<d	<d	<d	<d	<d	<d	<d	<d	<d	<d	<d
<d	<d	<d	<d	<d	<d	<d	<d	<d	<d	<d	<d
<d	<d	<d	<d	<d	<d	<d	<d	<d	<d	<d	<d
<d	<d	<d	<d	<d	<d	<d	<d	<d	<d	<d	<d
NA	NA	NA	NA	NA	NA	NA	NA	NA	NA	NA	NA

Lab sample #	Mine type	EX number	Sample location	Sample depth, cm	Concentration (µg/kg) 1,3-DNB	2,4-DNT	2,4,6-TNT	4-Am-DNT	2-Am-DNT	2,6-DNT
A190	TMM-1	329	NE	surface	<d	<d	<d	<d	<d	<d
A191	TMM-1	329	NE	0-5	<d	<d	<d	<d	<d	<d
A192	TMM-1	329	NE	5-10	<d	<d	<d	<d	<d	<d
A193	TMM-1	329	NE	10-15	<d	<d	<d	<d	<d	<d
A194	TMM-1	329	SE	surface	<d	<d	<d	<d	<d	<d
A195	TMM-1	329	SE	0-5	<d	<d	<d	<d	<d	<d
A196	TMM-1	329	SE	5-10	<d	<d	<d	<d	<d	<d
A197	TMM-1	329	SE	10-15	<d	<d	7	<d	<d	<d
A198	TMM-1	329	SW	surface	<d	<d	<d	<d	<d	<d
A199	TMM-1	329	SW	0-5	<d	<d	<d	<d	<d	<d
A200	TMM-1	329	SW	5-10	NA	NA	NA	NA	NA	NA
A201	TMM-1	329	SW	10-15	NA	NA	NA	NA	NA	NA
A202	TMM-1	329	NW	surface	<d	<d	<d	<d	<d	<d
A203	TMM-1	329	NW	0-5	<d	<d	<d	<d	<d	<d
A204	TMM-1	329	NW	5-10	<d	<d	<d	<d	<d	<d
A205	TMM-1	329	NW	10-15	<d	<d	<d	<d	<d	<d
A206	TMM-1	329	NE-7cm	surface	<d	<d	<d	<d	<d	<d
A207	TMM-1	329	E	surface	<d	<d	<d	<d	<d	<d
A208	TMM-1	329	E-7cm	surface	<d	<d	<d	<d	<d	<d
A209	TMM-1	329	SE-7ccm	surface	<d	<d	<d	<d	<d	<d
A210	TMM-1	329	S	surface	<d	<d	<d	<d	<d	<d
A211	TMM-1	329	S-7cm	surface	<d	<d	<d	<d	<d	<d
A212	TMM-1	329	SW-7cm	surface	<d	<d	<d	<d	<d	<d
A213	TMM-1	329	W	surface	<d	<d	<d	<d	<d	<d
A214	TMM-1	329	W-7cm	surface	<d	<d	<d	<d	<d	<d
A215	TMM-1	329	NW-7cm	surface	<d	<d	<d	<d	<d	<d
A216	TMM-1	329	N	surface	<d	<d	<d	<d	<d	<d
A217	TMM-1	329	N-7cm	surface	<d	<d	<d	<d	<d	<d
A218	TMM-1	329	random	under	<d	<d	<d	<d	<d	<d
A219	TMM-1	329	random	under	<d	<d	<d	<d	<d	<d
A220	TMM-1	329	random	under	<d	8.5	<d	<d	<d	<d

Concentration (µg/kg)											
RDX	*2,5-DNT*	*3,5-DNT*	*3,4-DNT*	*3,5-DNA*	*TNB*	*2,4,5-TNT*	*1,4-DNB*	*m-NT*	*2,3,4-TNT*	*1,2-DNB*	*2,3-DNT*
<d	<d	<d	<d	<d	<d	<d	<d	<d	<d	<d	<d
<d	<d	<d	<d	<d	<d	<d	<d	<d	<d	<d	<d
<d	<d	<d	<d	<d	<d	<d	<d	<d	<d	<d	<d
<d	<d	<d	<d	<d	<d	<d	<d	<d	<d	<d	<d
<d	<d	<d	<d	<d	<d	<d	<d	<d	<d	<d	<d
<d	<d	<d	<d	<d	<d	<d	<d	<d	<d	<d	<d
<d	<d	<d	<d	<d	<d	<d	<d	<d	<d	<d	<d
<d	<d	<d	<d	<d	<d	<d	<d	<d	<d	<d	<d
<d	<d	<d	<d	<d	<d	<d	<d	<d	<d	<d	<d
<d	<d	<d	<d	<d	<d	<d	<d	<d	<d	<d	<d
NA	NA	NA	NA	NA	NA	NA	NA	NA	NA	NA	NA
NA	NA	NA	NA	NA	NA	NA	NA	NA	NA	NA	NA
<d	<d	<d	<d	<d	<d	<d	<d	<d	<d	<d	<d
<d	<d	<d	<d	<d	<d	<d	<d	<d	<d	<d	<d
<d	<d	<d	<d	<d	<d	<d	<d	<d	<d	<d	<d
<d	<d	<d	<d	<d	<d	<d	<d	<d	<d	<d	<d
<d	<d	<d	<d	<d	<d	<d	<d	<d	<d	<d	<d
<d	<d	<d	<d	<d	<d	<d	<d	<d	<d	<d	<d
<d	<d	<d	<d	<d	<d	<d	<d	<d	<d	<d	<d
<d	<d	<d	<d	<d	<d	<d	<d	<d	<d	<d	<d
<d	<d	<d	<d	<d	<d	<d	<d	<d	<d	<d	<d
<d	<d	<d	<d	<d	<d	<d	<d	<d	<d	<d	<d
<d	<d	<d	<d	<d	<d	<d	<d	<d	<d	<d	<d
<d	<d	<d	<d	<d	<d	<d	<d	<d	<d	<d	<d
<d	<d	<d	<d	<d	<d	<d	<d	<d	<d	<d	<d
<d	<d	<d	<d	<d	<d	<d	<d	<d	<d	<d	<d
<d	<d	<d	<d	<d	<d	<d	<d	<d	<d	<d	<d
<d	<d	<d	<d	<d	<d	<d	<d	<d	<d	<d	<d
<d	<d	<d	<d	<d	<d	<d	<d	<d	<d	<d	<d
<d	<d	<d	<d	<d	<d	<d	<d	<d	<d	<d	<d
<d	<d	<d	<d	<d	<d	<d	<d	<d	<d	<d	<d
<d	<d	<d	<d	<d	<d	<d	<d	<d	<d	<d	<d

APPENDIX D: ANALYTICAL RESULTS FOR SOIL SAMPLES COLLECTED AT THE FORT LEONARD WOOD RESEARCH MINEFIELD, JULY 1999

					Concentration (µg/kg)						
Lab sample #	*Mine type*	*EX number*	*Sample location*	*Sample depth, cm*	*1,3-DNB*	*2,4-DNT*	*2,4,6-TNT*	*4-Am-DNT*	*2-Am-DNT*	*2,6-DNT*	*RDX*
JL-2	PMA-2	11	random	under	<d	13.9	12.5	<d	<d	<d	<d
JL-3	PMA-1A	11	W-over	surface	<d	<d	<d	<d	<d	<d	<d
JL-4	PMA-1A	11	E-over	surface	<d	<d	<d	<d	<d	<d	<d
JL-5	PMA-1A	11	E-over	0-2	10.4	3.84	4.99	<d	<d	<d	<d
JL-6	PMA-1A	11	NE	surface	<d	<d	<d	<d	<d	<d	<d
JL-7	PMA-1A	11	NE	0-2.5	<d	<d	<d	<d	<d	<d	<d
JL-8	PMA-1A	11	NE	2.5-5	<d	<d	<d	<d	<d	<d	<d
JL-9	PMA-1A	11	SE	surface	24.8	31.6	<d	<d	<d	<d	<d
JL-10	PMA-1A	11	SE	0-2.5	20	37.1	2.98	32.5	26.7	<d	<d
JL-11	PMA-1A	11	SE	2.5-5	2.23	7.72	0.84	8.33	8.86	<d	<d
JL-12	PMA-1A	11	SW	surface	10.7	9.5	trace	43.6	41.2	<d	<d
JL-13	PMA-1A	11	SW	0-2.5	39.5	75.8	11.1	183	170	<d	<d
JL-14	PMA-1A	11	SW	2.5-5	27.3	55.4	3.67	28.8	29.5	<d	<d
JL-15	PMA-1A	11	NW	surface	<d	<d	<d	<d	<d	<d	<d
JL-16	PMA-1A	11	NW	0-2.5	7.45	2.94	<d	7.52	<d	<d	<d
JL-17	PMA-1A	11	NW	2.5-5	1.09	3.05	1.19	<d	<d	<d	<d
JL-18	PMA-1A	11	NE-7cm	surface	<d	<d	<d	<d	<d	<d	<d
JL-19	PMA-1A	11	SE-7cm	surface	<d	<d	<d	<d	<d	<d	<d
JL-20	PMA-1A	11	SW-7cm	surface	43.3	63	5.21	272	292	<d	<d
JL-21	PMA-1A	11	NW-7cm	surface	<d	<d	<d	<d	<d	<d	<d
JL-22	PMA-1A	11	random	under	628	484	41.5	38.3	46.6	<d	<d
JL-23	PMA-1A	13	W-over	surface	<d	<d	<d	<d	<d	<d	<d
JL-24	PMA-1A	13	E-over	surface	<d	<d	<d	<d	<d	<d	<d
JL-25	PMA-1A	13	E-over	0-2	18.2	9.64	1.27	3.86	3.1	<d	<d
JL-26	PMA-1A	13	NE	surface	<d	<d	<d	<d	<d	<d	<d
JL-27	PMA-1A	13	NE	0-2.5	<d	<d	<d	1.26	<d	<d	<d
JL-28	PMA-1A	13	NE	2.5-5	10	97.3	6.04	125	194	<d	<d
JL-29	PMA-1A	13	SE	surface	25.6	52.1	5.51	329	316	<d	<d
JL-30	PMA-1A	13	SE	0-2.5	<d	<d	<d	<d	<d	<d	<d
JL-31	PMA-1A	13	SE	2.5-5	<d	<d	<d	5.86	4.92	<d	<d
JL-32	PMA-1A	13	SW	surface	<d	5.42	3.66	4.3	3.83	<d	<d
JL-33	PMA-1A	13	SW	0-2.5	14.2	42.6	2.57	33.1	33.6	<d	<d
JL-34	PMA-1A	13	SW	2.5-5	6.65	36.9	1	43.4	79.2	<d	<d
JL-35	PMA-1A	13	NW	surface	<d	<d	<d	<d	<d	<d	<d
JL-36	PMA-1A	13	NW	0-2.5	<d	<d	<d	<d	<d	<d	<d
JL-37	PMA-1A	13	NW	2.5-5	2.74	17.6	2.44	21.3	32.1	<d	<d
JL-38	PMA-1A	13	NE-7cm	surface	<d	<d	<d	36.8	44.3	<d	<d
JL-39	PMA-1A	13	SE-7cm	surface	16.9	52.2	2.93	226	227	<d	<d
JL-40	PMA-1A	13	SW-7cm	surface	<d	<d	<d	<d	<d	<d	<d
JL-41	PMA-1A	13	NW-7cm	surface	<d	<d	<d	<d	<d	<d	<d
JL-42	PMA-1A	13	random	under	425	1,223	1,351	790	1,180	<d	<d
JL-43	TMA-5	253	Center	surface	<d	<d	<d	<d	<d	<d	<d
JL-44	TMA-5	253	Center	0-5	<d	<d	<d	<d	<d	<d	<d
JL-45	TMA-5	253	Center	5-10	<d	3.13	<d	<d	<d	<d	<d
JL-46	TMA-5	253	Center	10-15	<d	7.81	<d	<d	<d	<d	<d
JL-47	TMA-5	253	NE	surface	<d	<d	<d	<d	<d	<d	<d
JL-48	TMA-5	253	SE	0-5	1.43	8.47	1.9	49.5	62.8	<d	<d
JL-49	TMA-5	253	SE	5-10	4.15	41.8	7.56	125	187	<d	<d
JL-50	TMA-5	253	SE	10-15	4.47	48.6	22	209	270	<d	<d
JL-51	TMA-5	253	SE	surface	<d	<d	<d	<d	<d	<d	<d
JL-52	TMA-5	253	NE	0-5	<d	<d	<d	<d	<d	<d	<d
JL-53	TMA-5	253	NE	5-10	<d	<d	<d	<d	<d	<d	<d
JL-54	TMA-5	253	NE	10-15	0.95	4.73	0.62	4.87	6.99	<d	<d
JL-55	TMA-5	253	SW	surface	<d	<d	<d	<d	<d	<d	<d
JL-56	TMA-5	253	SW	0-5	<d	<d	<d	<d	<d	<d	<d
JL-57	TMA-5	253	SW	5-10	<d	<d	<d	<d	<d	<d	<d
JL-58	TMA-5	253	SW	10-15	<d	3.8	0.82	11.8	15.7	<d	<d
JL-59	TMA-5	253	NW	surface	<d	3.96	<d	<d	<d	<d	<d
JL-60	TMA-5	253	NW	0-5	<d	<d	<d	<d	<d	<d	<d
JL-61	TMA-5	253	NW	5-10	<d	<d	<d	<d	<d	<d	<d
JL-62	TMA-5	253	NW	10-15	<d	1.88	0.64	9.99	6.13	<d	<d

Concentration (µg/kg)

2,5-DNT	3,5-DNT	3,4-DNT	3,5-DNA	1,3,5-TNB	3-NA	2,4,5-TNT	1,4-DNB	4-Am-2-NT	m-NT	2,3,4-TNT	1,2-DNB	2,3-DNT	3,4,5-TNT
<d	<d	<d	<d	<d	<d	<d	<d	<d	<d	<d	<d	<d	<d
<d	<d	<d	<d	<d	<d	<d	<d	<d	<d	<d	<d	<d	<d
<d	<d	<d	<d	<d	<d	<d	<d	<d	<d	<d	<d	<d	<d
<d	<d	<d	<d	<d	<d	<d	<d	<d	<d	<d	<d	<d	<d
<d	<d	<d	<d	<d	<d	<d	<d	<d	<d	<d	<d	<d	<d
<d	<d	<d	<d	<d	<d	<d	<d	<d	<d	<d	<d	<d	<d
<d	<d	<d	<d	<d	<d	<d	<d	<d	<d	<d	<d	<d	<d
<d	<d	<d	<d	<d	<d	<d	<d	<d	<d	<d	<d	<d	<d
<d	<d	<d	<d	<d	<d	<d	<d	<d	<d	<d	<d	<d	<d
<d	<d	<d	<d	<d	<d	<d	<d	<d	<d	<d	<d	<d	<d
<d	<d	<d	<d	<d	<d	<d	<d	<d	<d	<d	<d	<d	<d
<d	<d	<d	<d	<d	<d	<d	<d	<d	<d	<d	<d	<d	<d
<d	11.9	<d	<d	<d	<d	<d	<d	<d	<d	<d	<d	<d	<d
<d	<d	<d	<d	<d	<d	<d	<d	<d	<d	<d	<d	<d	<d
<d	<d	<d	<d	<d	<d	<d	<d	<d	<d	<d	<d	<d	<d
<d	<d	<d	<d	<d	<d	<d	<d	<d	<d	<d	<d	<d	<d
<d	<d	<d	<d	<d	<d	<d	<d	<d	<d	<d	<d	<d	<d
<d	<d	<d	<d	<d	<d	<d	<d	<d	<d	<d	<d	<d	<d
<d	<d	<d	<d	<d	<d	<d	<d	<d	<d	<d	<d	<d	<d
<d	<d	<d	<d	<d	<d	<d	<d	<d	<d	<d	<d	<d	<d
18.8	114	<d	<d	<d	<d	<d	<d	<d	<d	<d	55.1	<d	<d
<d	<d	<d	<d	<d	<d	<d	<d	<d	<d	<d	<d	<d	<d
<d	<d	<d	<d	<d	<d	<d	<d	<d	<d	<d	<d	<d	<d
<d	<d	<d	<d	<d	<d	<d	<d	<d	<d	<d	<d	<d	<d
<d	<d	<d	<d	<d	<d	<d	<d	<d	<d	<d	<d	<d	<d
<d	<d	<d	<d	<d	<d	<d	<d	<d	<d	<d	<d	<d	<d
<d	<d	<d	<d	<d	<d	<d	<d	<d	<d	<d	<d	<d	<d
<d	<d	<d	<d	<d	<d	<d	<d	<d	<d	<d	<d	<d	<d
<d	<d	<d	<d	<d	<d	<d	<d	<d	<d	<d	<d	<d	<d
<d	<d	<d	<d	<d	<d	<d	<d	<d	<d	<d	<d	<d	<d
<d	<d	<d	<d	<d	<d	<d	<d	<d	<d	<d	<d	<d	<d
<d	<d	<d	<d	<d	<d	<d	<d	<d	<d	<d	<d	<d	<d
<d	<d	<d	<d	<d	<d	<d	<d	<d	<d	<d	<d	<d	<d
<d	<d	<d	<d	<d	<d	<d	<d	<d	<d	<d	<d	<d	<d
<d	<d	<d	<d	<d	<d	<d	<d	<d	<d	<d	<d	<d	<d
<d	<d	<d	<d	<d	<d	<d	<d	<d	<d	<d	<d	<d	<d
<d	<d	<d	<d	<d	<d	<d	<d	<d	<d	<d	<d	<d	<d
<d	<d	<d	<d	<d	<d	<d	<d	<d	<d	<d	<d	<d	<d
3.62	280	<d	134	<d	175	<d	<d	<d	<d	<d	11.9	<d	<d
<d	<d	<d	<d	<d	<d	<d	<d	<d	<d	<d	<d	<d	<d
<d	<d	<d	<d	<d	<d	<d	<d	<d	<d	<d	<d	<d	<d
<d	<d	<d	<d	<d	<d	<d	<d	<d	<d	<d	<d	<d	<d
<d	<d	<d	<d	<d	<d	<d	<d	<d	<d	<d	<d	<d	<d
<d	<d	<d	<d	<d	<d	<d	<d	<d	<d	<d	<d	<d	<d
<d	<d	<d	<d	<d	<d	<d	<d	<d	<d	<d	<d	<d	<d
<d	<d	<d	25.9	<d	<d	<d	<d	<d	<d	<d	<d	<d	<d
<d	<d	<d	58.4	<d	<d	<d	<d	<d	<d	<d	<d	<d	<d
<d	<d	<d	<d	<d	<d	<d	<d	<d	<d	<d	<d	<d	<d
<d	<d	<d	<d	<d	<d	<d	<d	<d	<d	<d	<d	<d	<d
<d	<d	<d	<d	<d	<d	<d	<d	<d	<d	<d	<d	<d	<d
<d	<d	<d	5.3	<d	<d	<d	<d	<d	<d	<d	<d	<d	<d
<d	<d	<d	<d	<d	<d	<d	<d	<d	<d	<d	<d	<d	<d
<d	<d	<d	<d	<d	<d	<d	<d	<d	<d	<d	<d	<d	<d
<d	<d	<d	<d	<d	<d	<d	<d	<d	<d	<d	<d	<d	<d
<d	<d	<d	4.05	<d	<d	<d	<d	<d	<d	<d	<d	<d	<d
<d	<d	<d	<d	<d	<d	<d	<d	<d	<d	<d	<d	<d	<d
<d	<d	<d	<d	<d	<d	<d	<d	<d	<d	<d	<d	<d	<d
<d	<d	<d	<d	<d	<d	<d	<d	<d	<d	<d	<d	<d	<d
<d	<d	<d	<d	<d	<d	<d	<d	<d	<d	<d	<d	<d	<d

to contents

Lab sample #	Mine type	EX number	Sample location	Sample depth, cm	Concentration (µg/kg) 1,3-DNB	2,4-DNT	2,4,6-TNT	4-Am-DNT	2-Am-DNT	2,6-DNT	RDX
JL-63	TMA-5	253	NE-7cm	surface	<d	<d	<d	<d	<d	<d	<d
JL-64	TMA-5	253	E	surface	<d	<d	<d	<d	<d	<d	<d
JL-65	TMA-5	253	E-7cm	surface	<d	<d	<d	<d	<d	<d	<d
JL-66	TMA-5	253	SE-7cm	surface	<d	8.88	<d	57.3	46.9	<d	<d
JL-67	TMA-5	253	S	surface	<d	<d	<d	<d	<d	<d	<d
JL-68	TMA-5	253	S-7cm	surface	<d	<d	<d	7.65	6.7	<d	<d
JL-69	TMA-5	253	SW-7cm	surface	<d	<d	<d	<d	<d	<d	<d
JL-70	TMA-5	253	W	surface	<d	<d	<d	<d	<d	<d	<d
JL-71	TMA-5	253	W-7cm	surface	<d	<d	<d	<d	<d	<d	<d
JL-72	TMA-5	253	NW-7cm	surface	2.17	<d	27.1	3.17	2.09	<d	<d
JL-73	TMA-5	253	N	surface	<d	<d	<d	<d	<d	<d	<d
JL-74	TMA-5	253	N-7cm	surface	<d	<d	<d	<d	<d	<d	<d
JL-75	TMA-5	253	center	under	243	3,139	4,479	1,368	1,896	44.4	<d
JL-76	TMA-5	253	S	under	1,034	2,803	5,184	2,230	3,084	71	<d
JL-77	TMA-5	253	N	under	1,092	8,267	30,667	1,911	3,033	120	<d
JL-78	TMA-5	292	Center	surface	<d	<d	<d	<d	<d	<d	<d
JL-79	TMA-5	292	Center	0-5	<d	<d	<d	<d	<d	<d	<d
JL-80	TMA-5	292	Center	5-10	<d	<d	1.81	0.96	<d	<d	<d
JL-81	TMA-5	292	Center	no sample							
JL-82	TMA-5	292	NE	surface	<d	<d	<d	<d	<d	<d	<d
JL-83	TMA-5	292	NE	0-5	<d	<d	<d	<d	<d	<d	<d
JL-84	TMA-5	292	NE	5-10	<d	<d	<d	<d	<d	<d	<d
JL-85	TMA-5	292	NE	10-15	1.98	15.7	3.35	28.2	34.1	<d	<d
JL-86	TMA-5	292	SE	surface	<d	<d	<d	4.09	4.21	<d	<d
JL-87	TMA-5	292	SE	0-5	<d	<d	<d	3.83	3.53	<d	<d
JL-88	TMA-5	292	SE	5-10	1.72	21.1	4.53	55.8	73.2	<d	<d
JL-89	TMA-5	292	SE	10-15	4.7	180	22.3	503	702	1.9	<d
JL-90	TMA-5	292	SW	surface	<d	<d	<d	2.34	1.92	<d	<d
JL-91	TMA-5	292	SW	0-5	1	3.22	1.11	10.6	12.7	<d	<d
JL-92	TMA-5	292	SW	5-10	2.15	30.2	1.95	55.7	75.8	0.51	<d
JL-93	TMA-5	292	SW	10-15	21.2	820	131	1,083	1,560	6.5	<d
JL-94	TMA-5	292	NW	surface	<d	<d	<d	<d	<d	<d	<d
JL-95	TMA-5	292	NW	0-5	<d	<d	<d	<d	<d	<d	<d
JL-96	TMA-5	292	NW	5-10	<d	2.37	0.45	5.2	5.56	<d	<d
JL-97	TMA-5	292	NW	10-15	1.73	26.4	3.16	28	37.6	0.61	<d
JL-98	TMA-5	292	NE-7cm	surface	<d	<d	<d	<d	<d	<d	<d
JL-99	TMA-5	292	E	surface	<d	<d	<d	<d	<d	<d	<d
JL-100	TMA-5	292	E-7cm	surface	<d	<d	<d	<d	<d	<d	<d
JL-101	TMA-5	292	SE-7cm	surface	3.87	<d	<d	221	211	<d	<d
JL-102	TMA-5	292	S	surface	<d	22.6	3.09	22.7	25.8	<d	<d
JL-103	TMA-5	292	S-7cm	surface	3.84	30.3	2.12	168	211	2.03	<d
JL-104	TMA-5	292	SW-7cm	surface	2.15	14.7	1.98	43.3	34.7	<d	<d
JL-105	TMA-5	292	W	surface	<d	7.78	<d	1.06	0.65	<d	<d
JL-106	TMA-5	292	W-7cm	surface	<d	<d	<d	<d	<d	<d	<d
JL-107	TMA-5	292	NW-7cm	surface	<d	<d	<d	<d	<d	<d	<d
JL-108	TMA-5	292	N	surface	<d	<d	<d	<d	<d	<d	<d
JL-109	TMA-5	292	N-7cm	surface	<d	<d	<d	<d	<d	<d	<d
JL-110	TMA-5	292	center	under	861	4,517	15,582	1,126	1,358	43	<d
JL-111	TMA-5	292	SW	under	4,315	14,894	92,588	1,070	1,692	239	<d
JL-112	TMA-5	292	SE	under	237	1,612	3,876	1,527	1,985	18.7	<d
JL-119	Type 72	760	Center	surface	<d	<d	<d	<d	<d	<d	<d
JL-120	Type 72	760	Center	0-5	<d	<d	1.61	1.64	1.53	<d	<d
JL-121	Type 72	760	Center	5-15 cm	<d	0.99	6.87	0.84	1.11	<d	<d
JL-122	Type 72	760	Center	15-20 cm	<d	<d	1.5	0.61	0.51	<d	<d
JL-123	Type 72	760	NE	surface	<d	<d	<d	<d	<d	<d	<d
JL-124	Type 72	760	NE	0-5	<d	<d	<d	<d	<d	<d	<d
JL-125	Type 72	760	NE	5-15 cm	<d	<d	<d	<d	<d	<d	<d
JL-126	Type 72	760	NE	15-20 cm	<d	<d	<d	<d	<d	<d	<d
JL-127	Type 72	760	SE	surface	<d	<d	<d	<d	<d	<d	<d
JL-128	Type 72	760	SE	0-5	<d	<d	<d	<d	<d	<d	<d
JL-129	Type 72	760	SE	5-15 cm	<d	<d	<d	<d	<d	<d	<d

Concentration (µg/kg)													
2,5-DNT	*3,5-DNT*	*3,4-DNT*	*3,5-DNA*	*1,3,5-TNB*	*3-NA*	*2,4,5-TNT*	*1,4-DNB*	*4-Am-2-NT*	*m-NT*	*2,3,4-TNT*	*1,2-DNB*	*2,3-DNT*	*3,4,5-TNT*
<d	<d	<d	<d	<d	<d	<d	<d	<d	<d	<d	<d	<d	<d
<d	<d	<d	<d	<d	<d	<d	<d	<d	<d	<d	<d	<d	<d
<d	<d	<d	<d	<d	<d	<d	<d	<d	<d	<d	<d	<d	<d
<d	<d	<d	<d	<d	<d	<d	<d	<d	<d	<d	<d	<d	<d
<d	<d	<d	<d	<d	<d	<d	<d	<d	<d	<d	<d	<d	<d
<d	<d	<d	<d	<d	<d	<d	<d	<d	<d	<d	<d	<d	<d
<d	<d	<d	<d	<d	<d	<d	<d	<d	<d	<d	<d	<d	<d
<d	<d	<d	<d	<d	<d	<d	<d	<d	<d	<d	<d	<d	<d
<d	<d	<d	<d	<d	<d	<d	<d	<d	<d	<d	<d	<d	<d
<d	<d	<d	<d	<d	<d	<d	<d	<d	<d	<d	<d	<d	<d
<d	<d	<d	<d	<d	<d	<d	<d	<d	<d	<d	<d	<d	<d
<d	<d	<d	<d	<d	<d	<d	<d	<d	<d	<d	<d	<d	<d
12.2	330	5.25	1,133	774	96.7	<d	<d	<d	<d	18.7	<d	<d	<d
34.6	726	7.23	1,677	2,009	137	20.5	<d	<d	<d	70.7	<d	<d	<d
80.4	906	18.1	2,133	4,225	227	97	<d	<d	<d	474	<d	<d	<d
<d	<d	<d	<d	<d	<d	<d	<d	<d	<d	<d	<d	<d	<d
<d	<d	<d	<d	<d	<d	<d	<d	<d	<d	<d	<d	<d	<d
<d	<d	<d	<d	<d	<d	<d	<d	<d	<d	<d	<d	<d	<d
<d	<d	<d	<d	<d	<d	<d	<d	<d	<d	<d	<d	<d	<d
<d	<d	<d	<d	<d	<d	<d	<d	<d	<d	<d	<d	<d	<d
<d	<d	<d	<d	<d	<d	<d	<d	<d	<d	<d	<d	<d	<d
<d	<d	<d	<d	<d	<d	<d	<d	<d	<d	<d	<d	<d	<d
<d	<d	<d	<d	<d	<d	<d	<d	<d	<d	<d	<d	<d	<d
<d	<d	<d	<d	<d	<d	<d	<d	<d	<d	<d	<d	<d	<d
<d	<d	<d	<d	<d	<d	<d	<d	<d	<d	<d	<d	<d	<d
<d	<d	<d	<d	<d	<d	<d	<d	<d	<d	<d	<d	<d	<d
<d	<d	<d	<d	<d	<d	<d	<d	<d	<d	<d	<d	<d	<d
<d	<d	<d	<d	<d	<d	<d	<d	<d	<d	<d	<d	<d	<d
<d	<d	<d	<d	<d	<d	<d	<d	<d	<d	<d	<d	<d	<d
<d	93.3	<d	122	<d	39.7	<d	<d	<d	<d	2.73	<d	<d	<d
<d	<d	<d	<d	<d	<d	<d	<d	<d	<d	<d	<d	<d	<d
<d	<d	<d	<d	<d	<d	<d	<d	<d	<d	<d	<d	<d	<d
<d	<d	<d	<d	<d	<d	<d	<d	<d	<d	<d	<d	<d	<d
<d	<d	<d	<d	<d	<d	<d	<d	<d	<d	<d	<d	<d	<d
<d	<d	<d	<d	<d	<d	<d	<d	<d	<d	<d	<d	<d	<d
<d	<d	<d	<d	<d	<d	<d	<d	<d	<d	<d	<d	<d	<d
<d	<d	<d	<d	<d	<d	<d	<d	<d	<d	<d	<d	<d	<d
<d	<d	<d	<d	<d	<d	<d	<d	<d	<d	<d	<d	<d	<d
<d	<d	<d	<d	<d	<d	<d	<d	<d	<d	<d	<d	<d	<d
<d	<d	<d	<d	<d	<d	<d	<d	<d	<d	<d	<d	<d	<d
<d	<d	<d	<d	<d	<d	<d	<d	<d	<d	<d	<d	<d	<d
<d	<d	<d	<d	<d	<d	<d	<d	<d	<d	<d	<d	<d	<d
<d	<d	<d	<d	<d	<d	<d	<d	<d	<d	<d	<d	<d	<d
<d	<d	<d	<d	<d	<d	<d	<d	<d	<d	<d	<d	<d	<d
<d	<d	<d	<d	<d	<d	<d	<d	<d	<d	<d	<d	<d	<d
63.5	359	5	613	2,131	88	80	<d	<d	<d	2,991	183	<d	<d
497	1,813	32	1,603	6,300	92	4,843	<d	<d	<d	7,070	411	<d	<d
11.2	229	3	359	502	60	28.7	<d	<d	<d	118	21.8	<d	<d
<d	<d	<d	<d	<d	<d	<d	<d	<d	<d	<d	<d	<d	<d
<d	<d	<d	<d	<d	<d	<d	<d	<d	<d	<d	<d	<d	<d
<d	<d	<d	<d	<d	<d	<d	<d	<d	<d	<d	<d	<d	<d
<d	<d	<d	<d	<d	<d	<d	<d	<d	<d	<d	<d	<d	<d
<d	<d	<d	<d	<d	<d	<d	<d	<d	<d	<d	<d	<d	<d
<d	<d	<d	<d	<d	<d	<d	<d	<d	<d	<d	<d	<d	<d
<d	<d	<d	<d	<d	<d	<d	<d	<d	<d	<d	<d	<d	<d
<d	<d	<d	<d	<d	<d	<d	<d	<d	<d	<d	<d	<d	<d
<d	<d	<d	<d	<d	<d	<d	<d	<d	<d	<d	<d	<d	<d
<d	<d	<d	<d	<d	<d	<d	<d	<d	<d	<d	<d	<d	<d
<d	<d	<d	<d	<d	<d	<d	<d	<d	<d	<d	<d	<d	<d

to contents

Lab sample #	Mine type	EX number	Sample location	Sample depth, cm	Concentration (µg/kg) 1,3-DNB	2,4-DNT	2,4,6-TNT	4-Am-DNT	2-Am-DNT	2,6-DNT	RDX
JL-130	Type 72	760	SE	15-20 cm	<d	<d	0.84	<d	<d	<d	<d
JL-131	Type 72	760	SW	surface	<d	<d	<d	<d	<d	<d	<d
JL-132	Type 72	760	SW	0-5	<d	<d	<d	<d	<d	<d	<d
JL-133	Type 72	760	SW	5-15 cm	<d	<d	10.3	<d	<d	<d	<d
JL-134	Type 72	760	SW	15-20 cm	<d	<d	0.37	<d	<d	<d	<d
JL-135	Type 72	760	NW	surface	<d	<d	<d	<d	<d	<d	<d
JL-136	Type 72	760	NW	0-5	<d	<d	<d	<d	<d	<d	<d
JL-137	Type 72	760	NW	5-15 cm	<d	<d	<d	<d	<d	<d	<d
JL-138	Type 72	760	NW	15-20 cm	<d	<d	<d	<d	<d	<d	<d
JL-139	Type 72	760	NE-7cm	surface	<d	<d	<d	<d	<d	<d	<d
JL-140	Type 72	760	E	surface	<d	<d	<d	<d	<d	<d	<d
JL-141	Type 72	760	E-7cm	surface	<d	<d	<d	<d	<d	<d	<d
JL-142	Type 72	760	SE-7cm	surface	<d	<d	<d	<d	<d	<d	<d
JL-143	Type 72	760	S	surface	<d	<d	<d	<d	<d	<d	<d
JL-144	Type 72	760	S-7cm	surface	<d	<d	<d	<d	<d	<d	<d
JL-145	Type 72	760	SW-7cm	surface	<d	<d	<d	<d	<d	<d	<d
JL-146	Type 72	760	W	surface	<d	<d	<d	<d	<d	<d	<d
JL-147	Type 72	760	W-7cm	surface	<d	<d	<d	<d	<d	<d	<d
JL-148	Type 72	760	NW-7cm	surface	<d	<d	<d	<d	<d	<d	<d
JL-149	Type 72	760	N	surface	<d	<d	<d	<d	<d	<d	<d
JL-150	Type 72	760	N-7cm	surface	<d	<d	<d	<d	<d	<d	<d
JL-151	Type 72	760	random	under	<d	16	4.27	12.3	17.7	<d	19.7
JL-152	Type 72	760	random	under	<d	35.4	32.3	24.4	32.2	<d	49.3
JL-153	Type 72	760	random	under	<d	1.93	<d	4.3	5.34	<d	2.27
JL-154	Type 72	767	Center	surface	<d	<d	<d	<d	<d	<d	<d
JL-155	Type 72	767	Center	0-5	<d	<d	1.95	<d	<d	<d	<d
JL-156	Type 72	767	Center	5-15 cm	<d	<d	2.16	<d	<d	<d	<d
JL-157	Type 72	767	Center	15-20 cm	<d	<d	<d	<d	<d	<d	<d
JL-158	Type 72	767	NE	surface	<d	<d	<d	<d	<d	<d	<d
JL-159	Type 72	767	NE	0-5	<d	<d	<d	<d	<d	<d	<d
JL-160	Type 72	767	NE	5-15 cm	<d	<d	<d	<d	<d	<d	<d
JL-161	Type 72	767	NE	15-20 cm	<d	<d	<d	<d	<d	<d	<d
JL-162	Type 72	767	SE	surface	<d	<d	8.69	<d	<d	<d	<d
JL-163	Type 72	767	SE	0-5	<d	<d	<d	<d	<d	<d	<d
JL-164	Type 72	767	SE	5-15 cm	<d	<d	<d	<d	<d	<d	<d
JL-165	Type 72	767	SE	15-20 cm	<d	<d	0.79	<d	<d	<d	<d
JL-166	Type 72	767	SW	surface	<d	<d	<d	<d	<d	<d	<d
JL-167	Type 72	767	SW	0-5	<d	<d	<d	<d	<d	<d	<d
JL-168	Type 72	767	SW	5-20 cm	<d	<d	<d	<d	<d	<d	<d
JL-169	Type 72	767	SW	no sample	<d	<d	<d	<d	<d	<d	<d
JL-170	Type 72	767	NW	surface	<d	<d	<d	<d	<d	<d	<d
JL-171	Type 72	767	NW	0-5	<d	<d	<d	<d	<d	<d	<d
JL-172	Type 72	767	NW	5-15 cm	<d	<d	<d	<d	<d	<d	<d
JL-173	Type 72	767	NW	15-20 cm	<d	<d	<d	<d	<d	<d	<d
JL-174	Type 72	767	NE-7cm	surface	<d	<d	<d	<d	<d	<d	<d
JL-175	Type 72	767	E	surface	<d	<d	<d	<d	<d	<d	<d
JL-176	Type 72	767	E-7cm	surface	<d	<d	<d	<d	<d	<d	<d
JL-177	Type 72	767	SE-7cm	surface	<d	<d	<d	<d	<d	<d	<d
JL-178	Type 72	767	S	surface	<d	<d	5.69	<d	<d	<d	<d
JL-179	Type 72	767	S-7cm	surface	<d	<d	<d	<d	<d	<d	<d
JL-180	Type 72	767	SW-7cm	surface	<d	<d	<d	<d	<d	<d	<d
JL-181	Type 72	767	W	surface	<d	<d	<d	<d	<d	<d	<d
JL-182	Type 72	767	W-7cm	surface	<d	<d	<d	<d	<d	<d	<d
JL-183	Type 72	767	NW-7cm	surface	<d	<d	<d	<d	<d	<d	<d
JL-184	Type 72	767	N	surface	<d	<d	<d	<d	<d	<d	<d
JL-185	Type 72	767	N-7cm	surface	<d	<d	<d	<d	<d	<d	<d
JL-186	Type 72	767	random	under	<d	<d	0.66	0.9	3.56	0.41	0.63
JL-187	Type 72	767	random	under	<d	2.6	2.89	2.02	2.93	0.09	1.63
JL-188	Type 72	767	random	under	<d	<d	1.45	1.34	<d	<d	1.12

Concentration (µg/kg)

2,5-DNT	3,5-DNT	3,4-DNT	3,5-DNA	1,3,5-TNB	3-NA	2,4,5-TNT	1,4-DNB	4-Am-2-NT	m-NT	2,3,4-TNT	1,2-DNB	2,3-DNT	3,4,5-TNT
<d	<d	<d	<d	<d	<d	<d	<d	<d	<d	<d	<d	<d	<d
<d	<d	<d	<d	<d	<d	<d	<d	<d	<d	<d	<d	<d	<d
<d	<d	<d	<d	<d	<d	<d	<d	<d	<d	<d	<d	<d	<d
<d	<d	<d	<d	<d	<d	<d	<d	<d	<d	<d	<d	<d	<d
<d	<d	<d	<d	<d	<d	<d	<d	<d	<d	<d	<d	<d	<d
<d	<d	<d	<d	<d	<d	<d	<d	<d	<d	<d	<d	<d	<d
<d	<d	<d	<d	<d	<d	<d	<d	<d	<d	<d	<d	<d	<d
<d	<d	<d	<d	<d	<d	<d	<d	<d	<d	<d	<d	<d	<d
<d	<d	<d	<d	<d	<d	<d	<d	<d	<d	<d	<d	<d	<d
<d	<d	<d	<d	<d	<d	<d	<d	<d	<d	<d	<d	<d	<d
<d	<d	<d	<d	<d	<d	<d	<d	<d	<d	<d	<d	<d	<d
<d	<d	<d	<d	<d	<d	<d	<d	<d	<d	<d	<d	<d	<d
<d	<d	<d	<d	<d	<d	<d	<d	<d	<d	<d	<d	<d	<d
<d	<d	<d	<d	<d	<d	<d	<d	<d	<d	<d	<d	<d	<d
<d	<d	<d	<d	<d	<d	<d	<d	<d	<d	<d	<d	<d	<d
<d	<d	<d	<d	<d	<d	<d	<d	<d	<d	<d	<d	<d	<d
<d	<d	<d	<d	<d	<d	<d	<d	<d	<d	<d	<d	<d	<d
<d	<d	<d	<d	<d	<d	<d	<d	<d	<d	<d	<d	<d	<d
<d	<d	<d	<d	<d	<d	<d	<d	<d	<d	<d	<d	<d	<d
<d	<d	<d	<d	<d	<d	<d	<d	<d	<d	<d	<d	<d	<d
<d	<d	<d	<d	<d	<d	<d	<d	<d	<d	<d	<d	<d	<d
<d	<d	<d	<d	<d	<d	<d	<d	<d	<d	<d	<d	<d	<d
<d	<d	<d	<d	12.8	<d	<d	<d	<d	<d	<d	<d	<d	<d
<d	<d	<d	<d	<d	<d	<d	<d	<d	<d	<d	<d	<d	<d
<d	<d	<d	<d	<d	<d	<d	<d	<d	<d	<d	<d	<d	<d
<d	<d	<d	<d	<d	<d	<d	<d	<d	<d	<d	<d	<d	<d
<d	<d	<d	<d	<d	<d	<d	<d	<d	<d	<d	<d	<d	<d
<d	<d	<d	<d	<d	<d	<d	<d	<d	<d	<d	<d	<d	<d
<d	<d	<d	<d	<d	<d	<d	<d	<d	<d	<d	<d	<d	<d
<d	<d	<d	<d	<d	<d	<d	<d	<d	<d	<d	<d	<d	<d
<d	<d	<d	<d	<d	<d	<d	<d	<d	<d	<d	<d	<d	<d
<d	<d	<d	<d	<d	<d	<d	<d	<d	<d	<d	<d	<d	<d
<d	<d	<d	<d	<d	<d	<d	<d	<d	<d	<d	<d	<d	<d
<d	<d	<d	<d	<d	<d	<d	<d	<d	<d	<d	<d	<d	<d
<d	<d	<d	<d	<d	<d	<d	<d	<d	<d	<d	<d	<d	<d
<d	<d	<d	<d	<d	<d	<d	<d	<d	<d	<d	<d	<d	<d
<d	<d	<d	<d	<d	<d	<d	<d	<d	<d	<d	<d	<d	<d
<d	<d	<d	<d	<d	<d	<d	<d	<d	<d	<d	<d	<d	<d
<d	<d	<d	<d	<d	<d	<d	<d	<d	<d	<d	<d	<d	<d
<d	<d	<d	<d	<d	<d	<d	<d	<d	<d	<d	<d	<d	<d
<d	<d	<d	<d	<d	<d	<d	<d	<d	<d	<d	<d	<d	<d
<d	<d	<d	<d	<d	<d	<d	<d	<d	<d	<d	<d	<d	<d
<d	<d	<d	<d	<d	<d	<d	<d	<d	<d	<d	<d	<d	<d
<d	<d	<d	<d	<d	<d	<d	<d	<d	<d	<d	<d	<d	<d
<d	<d	<d	<d	<d	<d	<d	<d	<d	<d	<d	<d	<d	<d
<d	<d	<d	<d	<d	<d	<d	<d	<d	<d	<d	<d	<d	<d
<d	<d	<d	<d	<d	<d	<d	<d	<d	<d	<d	<d	<d	<d
<d	<d	<d	<d	<d	<d	<d	<d	<d	<d	<d	<d	<d	<d
<d	<d	<d	<d	<d	<d	<d	<d	<d	<d	<d	<d	<d	<d
<d	<d	<d	<d	<d	<d	<d	<d	<d	<d	<d	<d	<d	<d
<d	<d	<d	<d	<d	<d	<d	<d	<d	<d	<d	<d	<d	<d
<d	<d	<d	<d	<d	<d	<d	<d	<d	<d	<d	<d	<d	<d
<d	<d	<d	<d	<d	<d	<d	<d	<d	<d	<d	<d	<d	<d
<d	<d	<d	<d	<d	<d	<d	<d	<d	<d	<d	<d	<d	<d
<d	<d	<d	<d	<d	<d	<d	<d	<d	<d	<d	<d	<d	<d
<d	<d	<d	<d	<d	<d	<d	<d	<d	<d	<d	<d	<d	<d
<d	<d	<d	<d	<d	<d	<d	<d	<d	<d	<d	<d	<d	<d
<d	<d	<d	<d	<d	<d	<d	<d	<d	<d	<d	<d	<d	<d
<d	<d	<d	<d	<d	<d	<d	<d	<d	<d	<d	<d	<d	<d

APPENDIX E: ANALYTICAL RESULTS FOR SOIL SAMPLES COLLECTED AT THE FORT LEONARD WOOD RESEARCH MINEFIELD, NOVEMBER 1999

					Concentration in soil (µg/kg)					
Lab sample #	*Mine type*	*EX number*	*Sample location*	*Sample depth, cm*	*1,3-DNB*	*2,4-DNT*	*2,4,6-TNT*	*4-Am-DNT*	*2-Am-DNT*	*2,6-DNT*
N99-1	TMA-5	256	over center	surface	<d	<d	7.39	<d	<d	<d
N99-2	TMA-5	256	over NE	surface	<d	<d	4.23	<d	<d	<d
N99-3	TMA-5	256	over SE	surface	<d	<d	2.16	<d	<d	<d
N99-4	TMA-5	256	over SW	surface	<d	<d	3.34	<d	<d	<d
N99-5	TMA-5	256	over NW	surface	<d	<d	<d	<d	<d	<d
N99-6	TMA-5	256	over center	0-2.5	<d	<d	<d	<d	<d	<d
N99-7	TMA-5	256	over center	2.5-5.0	<d	10.6	3.02	<d	<d	<d
N99-8	TMA-5	256	NE	surface	<d	2.39	24.2	4.31	8.31	<d
N99-9	TMA-5	256	NE-7cm	surface	<d	<d	<d	<d	<d	<d
N99-10	TMA-5	256	E	surface	<d	<d	<d	<d	<d	<d
N99-11	TMA-5	256	E-7cm	surface	<d	<d	<d	<d	<d	<d
N99-12	TMA-5	256	SE	surface	<d	52.3	<d	40.8	48.8	<d
N99-13	TMA-5	256	SE-7cm	surface	<d	69.3	<d	115	135	<d
N99-14	TMA-5	256	S	surface	<d	13.6	<d	42.6	45.2	<d
N99-15	TMA-5	256	S-7cm	surface	<d	17.8	<d	34.6	49.6	<d
N99-16	TMA-5	256	SW	surface	<d	<d	<d	6.15	6.15	<d
N99-17	TMA-5	256	SW-7cm	surface	<d	15.7	<d	40.7	47.8	<d
N99-18	TMA-5	256	W	surface	<d	<d	<d	<d	<d	<d
N99-19	TMA-5	256	W-7cm	surface	<d	<d	<d	4.52	4.75	<d
N99-20	TMA-5	256	NW	surface	<d	<d	<d	<d	<d	<d
N99-21	TMA-5	256	NW-7cm	surface	<d	<d	5.22	<d	<d	<d
N99-22	TMA-5	256	N	surface	<d	<d	<d	<d	<d	<d
N99-23	TMA-5	256	N-7cm	surface	<d	<d	<d	<d	<d	<d
N99-24	TMA-5	256	NE	0-2.5	<d	<d	<d	<d	<d	<d
N99-25	TMA-5	256	NE	2.5-5.0	111	2,264	1,059	1,641	2,347	85.3
N99-26	TMA-5	256	NE	5.0-7.5	<d	<d	<d	<d	<d	<d
N99-27	TMA-5	256	SE	0-2.5	<d	6.31	<d	14.2	13.6	<d
N99-28	TMA-5	256	SE	2.5-5.0	<d	17	9.88	28.8	27.5	<d
N99-29	TMA-5	256	SE	5.0-7.5	<d	150	7.5	163	207	1.48
N99-30	TMA-5	256	SW	0-2.5	<d	<d	<d	<d	<d	<d
N99-31	TMA-5	256	SW	2.5-5.0	<d	<d	5.01	1.85	1.49	<d
N99-32	TMA-5	256	SW	5.0-7.5	<d	46.3	2.08	72.8	79.1	<d
N99-33	TMA-5	256	NW	0-2.5	<d	<d	<d	<d	<d	<d
N99-34	TMA-5	256	NW	2.5-5.0	<d	<d	<d	<d	<d	<d
N99-35	TMA-5	256	NW	5.0-7.5	<d	<d	<d	<d	<d	<d
N99-36	TMA-5	256	center	under	31.3	1,187	70.5	1,137	1,245	77.3
N99-37	TMA-5	256	NE	under	108	3,463	1,041	1,649	1,772	33.6
N99-38	TMA-5	256	SE	under	524	5,477	873	2,802	3,428	253
N99-39	TMA-5	256	SW	under	432	3,090	1,247	1,043	1,289	178
N99-40	TMA-5	256	NW	under	68.6	1,992	945	183	205	<d
N99-41	TMA-5	261	over center	surface	<d	<d	<d	<d	<d	<d
N99-42	TMA-5	261	over NE	surface	<d	3.9	1.58	<d	<d	<d
N99-43	TMA-5	261	over SE	surface	<d	<d	<d	<d	<d	<d
N99-44	TMA-5	261	over SW	surface	<d	<d	<d	<d	<d	<d
N99-45	TMA-5	261	over NW	surface	<d	<d	<d	<d	<d	<d
N99-46	TMA-5	261	over center	0-2.5	<d	<d	<d	<d	<d	<d
N99-47	TMA-5	261	over center	2.5-5.0	<d	<d	<d	<d	<d	<d
N99-48	TMA-5	261	NE	surface	<d	<d	<d	<d	<d	<d
N99-49	TMA-5	261	NE-7cm	surface	<d	<d	<d	<d	<d	<d
N99-50	TMA-5	261	E	surface	<d	<d	<d	<d	<d	<d
N99-51	TMA-5	261	E-7cm	surface	<d	15.2	<d	46.4	53.5	<d
N99-52	TMA-5	261	SE	surface	<d	15.2	<d	55.8	68.7	<d
N99-53	TMA-5	261	SE-7cm	surface	<d	172	<d	269	320	5.55
N99-54	TMA-5	261	S	surface	<d	6.51	<d	<d	<d	<d
N99-55	TMA-5	261	S-7cm	surface	<d	<d	<d	<d	<d	<d
N99-56	TMA-5	261	SW	surface	<d	<d	<d	<d	<d	<d
N99-57	TMA-5	261	SW-7cm	surface	<d	<d	<d	<d	<d	<d
N99-58	TMA-5	261	W	surface	<d	<d	<d	<d	<d	<d
N99-59	TMA-5	261	W-7cm	surface	<d	<d	<d	<d	<d	<d
N99-60	TMA-5	261	NW	surface	<d	<d	<d	<d	<d	<d
N99-61	TMA-5	261	NW-7cm	surface	<d	<d	<d	<d	<d	<d
N99-62	TMA-5	261	N	surface	<d	<d	<d	<d	<d	<d

to contents

Concentration in soil (µg/kg)

RDX	*1,3,5-TNB*	*3-NA*	*3,5-DNA*	*2-Am-6-NT*	*2-Am-4-NT*	*4-Am-2-NT*	*TETRYL*	*HMX*	*NB*	*o-NT*	*m-NT*	*p-NT*
1.37	<d	<d	<d	<d	<d	<d	<d	<d	<d	<d	<d	<d
4.01	<d	<d	<d	<d	<d	<d	<d	<d	<d	<d	<d	<d
2.1	<d	<d	<d	<d	<d	<d	<d	<d	<d	<d	<d	<d
3.08	<d	<d	<d	<d	<d	<d	<d	<d	<d	<d	<d	<d
<d	<d	<d	<d	<d	<d	<d	<d	<d	<d	<d	<d	<d
<d	<d	<d	<d	<d	<d	<d	<d	<d	<d	<d	<d	<d
<d	<d	<d	<d	<d	<d	<d	<d	<d	<d	<d	<d	<d
<d	<d	<d	<d	<d	<d	<d	<d	<d	<d	<d	<d	<d
<d	<d	<d	<d	<d	<d	<d	<d	<d	<d	<d	<d	<d
<d	<d	<d	<d	<d	<d	<d	<d	<d	<d	<d	<d	<d
<d	<d	<d	<d	<d	<d	<d	<d	<d	<d	<d	<d	<d
<d	<d	<d	<d	<d	<d	<d	<d	<d	<d	<d	<d	<d
<d	<d	<d	<d	<d	<d	<d	<d	<d	<d	<d	<d	<d
<d	<d	<d	<d	<d	<d	<d	<d	<d	<d	<d	<d	<d
<d	<d	<d	<d	<d	<d	<d	<d	<d	<d	<d	<d	<d
<d	<d	<d	<d	<d	<d	<d	<d	<d	<d	<d	<d	<d
5.78	<d	<d	<d	<d	<d	<d	<d	<d	<d	<d	<d	<d
<d	<d	<d	<d	<d	<d	<d	<d	<d	<d	<d	<d	<d
<d	<d	<d	<d	<d	<d	<d	<d	<d	<d	<d	<d	<d
<d	<d	<d	<d	<d	<d	<d	<d	<d	<d	<d	<d	<d
<d	<d	<d	<d	<d	<d	<d	<d	<d	<d	<d	<d	<d
<d	<d	<d	<d	<d	<d	<d	<d	<d	<d	<d	<d	<d
<d	<d	<d	<d	<d	<d	<d	<d	<d	<d	<d	<d	<d
<d	<d	<d	<d	<d	<d	<d	<d	<d	<d	<d	<d	<d
19.8	29.9	77.5	260	107	66.3	62.8	<d	<d	<d	<d	<d	<d
<d	<d	<d	<d	<d	<d	<d	<d	<d	<d	<d	<d	<d
<d	<d	<d	<d	<d	<d	<d	<d	<d	<d	<d	<d	<d
<d	<d	<d	<d	<d	<d	<d	<d	<d	<d	<d	<d	<d
<d	<d	<d	<d	<d	<d	<d	<d	<d	<d	<d	<d	<d
<d	<d	<d	<d	<d	<d	<d	<d	<d	<d	<d	<d	<d
<d	<d	<d	<d	<d	<d	<d	<d	<d	<d	<d	<d	<d
<d	<d	<d	<d	<d	<d	<d	<d	<d	<d	<d	<d	<d
<d	<d	<d	<d	<d	<d	<d	<d	<d	<d	<d	<d	<d
<d	<d	<d	<d	<d	<d	<d	<d	<d	<d	<d	<d	<d
<d	<d	<d	<d	<d	<d	<d	<d	<d	<d	<d	<d	<d
34.2	18.6	29.8	267	110	102	74.8	<d	<d	<d	<d	<d	<d
16.9	31	62	81.3	178	70.8	82.9	<d	<d	<d	<d	<d	<d
71.6	376	135	1,083	205	181	168	<d	<d	<d	<d	<d	<d
50.8	581	66.4	531	131	66.8	72.3	<d	<d	<d	<d	<d	<d
10.5	27	26.4	20.7	101	44.7	36.9	<d	<d	<d	<d	<d	<d
<d	<d	<d	<d	<d	<d	<d	<d	<d	<d	<d	<d	<d
<d	<d	<d	<d	<d	<d	<d	<d	<d	<d	<d	<d	<d
<d	<d	<d	<d	<d	<d	<d	<d	<d	<d	<d	<d	<d
<d	<d	<d	<d	<d	<d	<d	<d	<d	<d	<d	<d	<d
<d	<d	<d	<d	<d	<d	<d	<d	<d	<d	<d	<d	<d
<d	<d	<d	<d	<d	<d	<d	<d	<d	<d	<d	<d	<d
<d	<d	<d	<d	<d	<d	<d	<d	<d	<d	<d	<d	<d
<d	<d	<d	<d	<d	<d	<d	<d	<d	<d	<d	<d	<d
<d	<d	<d	<d	<d	<d	<d	<d	<d	<d	<d	<d	<d
<d	<d	<d	<d	<d	<d	<d	<d	<d	<d	<d	<d	<d
<d	<d	<d	<d	<d	<d	<d	<d	<d	<d	<d	<d	<d
<d	<d	<d	<d	<d	<d	<d	<d	<d	<d	<d	<d	<d
<d	<d	<d	<d	<d	<d	<d	<d	<d	<d	<d	<d	<d
<d	<d	<d	<d	<d	<d	<d	<d	<d	<d	<d	<d	<d
<d	<d	<d	<d	<d	<d	<d	<d	<d	<d	<d	<d	<d
<d	<d	<d	<d	<d	<d	<d	<d	<d	<d	<d	<d	<d
<d	<d	<d	<d	<d	<d	<d	<d	<d	<d	<d	<d	<d
<d	<d	<d	<d	<d	<d	<d	<d	<d	<d	<d	<d	<d
<d	<d	<d	<d	<d	<d	<d	<d	<d	<d	<d	<d	<d
<d	<d	<d	<d	<d	<d	<d	<d	<d	<d	<d	<d	<d

to contents

Lab sample #	Mine type	EX number	Sample location	Sample depth, cm	Concentration in soil (µg/kg) 1,3-DNB	2,4-DNT	2,4,6-TNT	4-Am-DNT	2-Am-DNT	2,6-DNT
N99-63	TMA-5	261	N-7cm	surface	<d	<d	<d	<d	<d	<d
N99-64	TMA-5	261	NE	0-2.5	<d	<d	<d	<d	<d	<d
N99-65	TMA-5	261	NE	2.5-5.0	<d	<d	<d	<d	<d	<d
N99-66	TMA-5	261	NE	5.0-7.5	<d	16.5	106	9.12	15.4	<d
N99-67	TMA-5	261	SE	0-2.5	19.6	568	36.1	524	810	<d
N99-68	TMA-5	261	SE	2.5-5.0	71.4	1,388	119	1,809	2,321	97.3
N99-69	TMA-5	261	SE	5.0-7.5	<d	39	2.13	89.2	115	<d
N99-70	TMA-5	261	SW	0-2.5	<d	<d	<d	<d	<d	<d
N99-71	TMA-5	261	SW	2.5-5.0	<d	8.02	<d	19.5	32.3	<d
N99-72	TMA-5	261	SW	5.0-7.5	<d	12.6	<d	15.7	20.5	<d
N99-73	TMA-5	261	NW	0-2.5	<d	<d	<d	<d	<d	<d
N99-74	TMA-5	261	NW	2.5-5.0	<d	5.47	<d	2.91	3.33	<d
N99-75	TMA-5	261	NW	5.0-7.5	<d	278	16.9	271	313	3.24
N99-76	TMA-5	261	center	under	<d	<d	<d	<d	<d	<d
N99-77	TMA-5	261	NE	under	7,883	6,548	10,096	612	1,096	3,398
N99-78	TMA-5	261	SE	under	2,617	7,826	19,642	1,815	3,539	541
N99-79	TMA-5	261	SW	under	317	6,013	5,781	2,002	1,416	3,480
N99-80	TMA-5	261	NW	under	199	4,143	1,052	2,042	2,901	68.2
N99-81	TMA-5	261	NE-20cm	surface	<d	<d	6.53	1.94	2.44	<d
N99-82	TMA-5	261	SE-20cm	surface	6.4	248	11.3	586	685	55.2
N99-83	TMA-5	261	SW-20cm	surface	<d	9.36	4.93	1.43	2.44	<d
N99-84	TMA-5	261	NW-20cm	surface	<d	<d	<d	<d	<d	<d
N99-85	PMA-1A	48	over E	surface	<d	<d	<d	<d	<d	<d
N99-86	PMA-1A	48	over W	surface	<d	10.3	4.08	<d	2.09	<d
N99-87	PMA-1A	48	NE	surface	18.1	85.9	3.93	184	244	<d
N99-88	PMA-1A	48	NE-7cm	surface	<d	<d	<d	<d	5.9	<d
N99-89	PMA-1A	48	NE-20cm	surface	<d	<d	<d	<d	<d	<d
N99-90	PMA-1A	48	E-7cm	surface	13.7	71.7	<d	138	189	<d
N99-91	PMA-1A	48	SE	surface	53.4	227	<d	459	600	40.1
N99-92	PMA-1A	48	SE-7cm	surface	32.1	157	<d	217	323	<d
N99-93	PMA-1A	48	SE-20cm	surface	22.1	70.9	<d	85.2	150	2.8
N99-94	PMA-1A	48	S	surface	<d	<d	<d	<d	<d	<d
N99-95	PMA-1A	48	S-7cm	surface	<d	6.84	<d	3.15	5.95	<d
N99-96	PMA-1A	48	SW	surface	<d	<d	<d	<d	<d	<d
N99-97	PMA-1A	48	SW-7cm	surface	<d	<d	<d	<d	<d	<d
N99-98	PMA-1A	48	SW-20cm	surface	<d	<d	<d	<d	<d	<d
N99-99	PMA-1A	48	W-7cm	surface	<d	<d	<d	<d	<d	<d
N99-100	PMA-1A	48	NW	surface	<d	<d	<d	<d	<d	1.96
N99-101	PMA-1A	48	NW-7cm	surface	<d	<d	<d	<d	<d	0.988
N99-102	PMA-1A	48	NW-20cm	surface	<d	<d	<d	<d	<d	<d
N99-103	PMA-1A	48	N	surface	<d	9.62	<d	<d	<d	<d
N99-104	PMA-1A	48	N-7cm	surface	<d	<d	<d	<d	<d	<d
N99-105	PMA-1A	48	over E	0-2.4	<d	9.4	<d	2.12	2.1	<d
N99-106	PMA-1A	48	NE	0-2.5	20.1	41.9	5.05	79.8	107	<d
N99-107	PMA-1A	48	NE	2.5-5.0	4.8	19.9	<d	36.1	47.2	<d
N99-108	PMA-1A	48	SE	0-2.5	15.8	48.2	2.45	90.8	106	<d
N99-109	PMA-1A	48	SE	2.5-5.0	18.5	51.3	5.02	101	121	<d
N99-110	PMA-1A	48	SW	0-2.5	44.9	110	<d	29.8	54.3	<d
N99-111	PMA-1A	48	SW	2.5-5.0	40.2	102	<d	9.94	14.7	<d
N99-112	PMA-1A	48	NW	0-2.5	<d	7.72	<d	<d	<d	<d
N99-113	PMA-1A	48	NW	2.5-5.0	<d	<d	<d	<d	<d	<d
N99-114	PMA-1A	48	E	under	255	480	59.6	93.7	124	<d
N99-115	PMA-1A	48	W	under	38.4	60.7	5.16	42.1	57.4	<d
N99-116	PMA-1A	51	over E	surface	<d	<d	<d	<d	<d	<d
N99-117	PMA-1A	51	over W	surface	<d	<d	<d	<d	<d	<d
N99-118	PMA-1A	51	NE	surface	6.37	24.3	<d	<d	<d	<d
N99-119	PMA-1A	51	NE-7cm	surface	<d	<d	<d	<d	<d	<d
N99-120	PMA-1A	51	E-7cm	surface	<d	<d	<d	<d	<d	<d
N99-121	PMA-1A	51	SE	surface	<d	98.4	<d	63.7	62.2	<d
N99-122	PMA-1A	51	SE-7cm	surface	22	42.5	<d	43.6	55.9	<d

Concentration in soil (µg/kg)

RDX	*1,3,5-TNB*	*3-NA*	*3,5-DNA*	*2-Am-6-NT*	*2-Am-4-NT*	*4-Am-2-NT*	*TETRYL*	*HMX*	*NB*	*o-NT*	*m-NT*	*p-NT*
<d	<d	<d	<d	<d	<d	<d	<d	<d	<d	<d	<d	<d
<d	<d	<d	<d	<d	<d	<d	<d	<d	<d	<d	<d	<d
<d	<d	<d	<d	<d	<d	<d	<d	<d	<d	<d	<d	<d
<d	<d	<d	<d	<d	<d	<d	<d	<d	<d	<d	<d	<d
11.9	<d	16.6	37.5	62.3	29.3	14.2	<d	<d	<d	<d	<d	<d
87	50.8	37.3	138	95.4	76.5	31.8	<d	<d	<d	<d	<d	<d
7.35	<d	<d	<d	<d	<d	<d	<d	<d	<d	<d	<d	<d
<d	<d	<d	<d	<d	<d	<d	<d	<d	<d	<d	<d	<d
<d	<d	<d	<d	<d	<d	<d	<d	<d	<d	<d	<d	<d
<d	<d	<d	<d	<d	<d	<d	<d	<d	<d	<d	<d	<d
<d	<d	<d	<d	<d	<d	<d	<d	<d	<d	<d	<d	<d
<d	<d	<d	<d	<d	<d	<d	<d	<d	<d	<d	<d	<d
<d	<d	<d	<d	<d	<d	<d	<d	<d	<d	<d	<d	<d
<d	<d	<d	<d	<d	<d	<d	<d	<d	<d	<d	<d	<d
136	12,359	148	1,267	<d	32.5	487	<d	<d	<d	<d	<d	<d
74.9	2,403	222	1,748	<d	34.8	<d	<d	<d	<d	<d	<d	<d
20.3	158	88.9	228	<d	50.8	62.3	<d	<d	<d	<d	<d	<d
20.2	29.9	80.1	208	159	5,404	85.7	<d	<d	<d	<d	<d	<d
<d	<d	<d	<d	<d	<d	<d	<d	<d	<d	<d	<d	<d
<d	<d	<d	32.4	71.8	42.8	18.7	<d	<d	<d	<d	<d	<d
<d	<d	<d	<d	<d	<d	<d	<d	<d	<d	<d	<d	<d
<d	<d	<d	<d	<d	<d	<d	<d	<d	<d	<d	<d	<d
<d	<d	<d	<d	<d	<d	<d	<d	<d	<d	<d	<d	<d
<d	<d	<d	<d	<d	<d	<d	<d	<d	<d	<d	<d	<d
<d	<d	<d	<d	<d	<d	<d	<d	<d	<d	<d	<d	<d
<d	<d	<d	<d	<d	<d	<d	<d	<d	<d	<d	<d	<d
<d	<d	<d	<d	<d	<d	<d	<d	<d	<d	<d	<d	<d
<d	<d	<d	<d	<d	<d	<d	<d	<d	<d	<d	<d	<d
<d	<d	46	41.2	73.1	32	<d	<d	<d	<d	<d	<d	<d
<d	<d	<d	<d	<d	<d	<d	<d	<d	<d	<d	<d	<d
<d	<d	<d	<d	<d	<d	<d	<d	<d	<d	<d	<d	<d
<d	<d	<d	<d	<d	<d	<d	<d	<d	<d	<d	<d	<d
<d	<d	<d	<d	<d	<d	<d	<d	<d	<d	<d	<d	<d
<d	<d	<d	<d	<d	<d	<d	<d	<d	<d	<d	<d	<d
<d	<d	<d	<d	<d	<d	<d	<d	<d	<d	<d	<d	<d
<d	<d	<d	<d	<d	<d	<d	<d	<d	<d	<d	<d	<d
<d	<d	<d	<d	<d	<d	<d	<d	<d	<d	<d	<d	<d
<d	<d	<d	<d	<d	<d	<d	<d	<d	<d	<d	<d	<d
<d	<d	<d	<d	<d	<d	<d	<d	<d	<d	<d	<d	<d
<d	<d	<d	<d	<d	<d	<d	<d	<d	<d	<d	<d	<d
<d	<d	<d	<d	<d	<d	<d	<d	<d	<d	<d	<d	<d
<d	<d	<d	<d	<d	<d	<d	<d	<d	<d	<d	<d	<d
<d	<d	<d	<d	<d	<d	<d	<d	<d	<d	<d	<d	<d
<d	<d	<d	<d	<d	<d	<d	<d	<d	<d	<d	<d	<d
<d	<d	<d	<d	<d	<d	<d	<d	<d	<d	<d	<d	<d
<d	<d	<d	<d	<d	<d	<d	<d	<d	<d	<d	<d	<d
<d	<d	<d	<d	<d	<d	<d	<d	<d	<d	<d	<d	<d
<d	<d	<d	<d	<d	<d	<d	<d	<d	<d	<d	<d	<d
<d	<d	<d	<d	<d	<d	<d	<d	<d	<d	<d	<d	<d
<d	<d	<d	<d	<d	<d	<d	<d	<d	<d	<d	<d	<d
<d	<d	26	17.5	56.1	15.9	<d	<d	<d	<d	<d	<d	<d
<d	<d	<d	<d	<d	<d	<d	<d	<d	<d	<d	<d	<d
<d	<d	<d	<d	<d	<d	<d	<d	<d	<d	<d	<d	<d
<d	<d	<d	<d	<d	<d	<d	<d	<d	<d	<d	<d	<d
<d	<d	<d	<d	<d	<d	<d	<d	<d	<d	<d	<d	<d
<d	<d	<d	<d	<d	<d	<d	<d	<d	<d	<d	<d	<d
<d	<d	<d	<d	<d	<d	<d	<d	<d	<d	<d	<d	<d
<d	<d	<d	<d	<d	<d	<d	<d	<d	<d	<d	<d	<d
<d	<d	<d	<d	<d	<d	<d	<d	<d	<d	<d	<d	<d

to contents

Lab sample #	Mine type	EX number	Sample location	Sample depth, cm	Concentration in soil (µg/kg) 1,3-DNB	2,4-DNT	2,4,6-TNT	4-Am-DNT	2-Am-DNT	2,6-DNT
N99-123	PMA-1A	51	S	surface	14.6	19.3	<d	24.2	24.8	<d
N99-124	PMA-1A	51	S-7cm	surface	14.7	19.6	<d	20	20.4	<d
N99-125	PMA-1A	51	SW	surface	<d	4.2	<d	3.62	2.09	<d
N99-126	PMA-1A	51	SW-7cm	surface	<d	<d	<d	<d	5.18	<d
N99-127	PMA-1A	51	W-7cm	surface	<d	<d	<d	<d	<d	<d
N99-128	PMA-1A	51	NW	surface	<d	<d	<d	<d	<d	<d
N99-129	PMA-1A	51	NW-7cm	surface	<d	<d	<d	<d	<d	<d
N99-130	PMA-1A	51	N	surface	<d	<d	<d	<d	<d	<d
N99-131	PMA-1A	51	N-7cm	surface	<d	<d	<d	<d	<d	<d
N99-132	PMA-1A	51	over E	0-2.4	34.5	13.1	<d	<d	<d	<d
N99-133	PMA-1A	51	NE	0-2.5	<d	<d	<d	<d	<d	<d
N99-134	PMA-1A	51	NE	2.5-5.0	<d	<d	1.86	<d	<d	<d
N99-135	PMA-1A	51	SE	0-2.5	183	783	14.8	67.1	77.8	<d
N99-136	PMA-1A	51	SE	2.5-5.0	85	187	1.54	84.5	97	<d
N99-137	PMA-1A	51	SW	0-2.5	9.27	12.2	3.28	<d	3.75	<d
N99-138	PMA-1A	51	SW	2.5-5.0	8.68	23.5	1.98	4.61	2.38	<d
N99-139	PMA-1A	51	NW	0-2.5	106	332	<d	<d	3.67	<d
N99-140	PMA-1A	51	NW	2.5-5.0	8.98	23.4	3.69	7.18	7.03	<d
N99-141	PMA-1A	51	E	under	199	314	153	69	95.5	<d
N99-142	PMA-1A	51	W	under	43.6	50.6	7.9	8.34	4.62	<d
N99-143	PMA-2	117	over C	surface	<d	<d	<d	<d	<d	<d
N99-144	PMA-2	117	over C	0-2.5	<d	36.8	<d	<d	<d	<d
N99-145	PMA-2	117	NE	surface	<d	<d	<d	<d	<d	<d
N99-146	PMA-2	117	NE-7cm	surface	<d	<d	<d	<d	<d	<d
N99-147	PMA-2	117	E-7cm	surface	<d	<d	<d	<d	<d	<d
N99-148	PMA-2	117	SE	surface	<d	<d	<d	<d	<d	<d
N99-149	PMA-2	117	SE-7cm	surface	<d	<d	<d	<d	<d	<d
N99-150	PMA-2	117	S	0-2.5	<d	<d	<d	<d	<d	<d
N99-151	PMA-2	117	SW-7cm	surface	<d	<d	<d	<d	<d	<d
N99-152	PMA-2	117	NW	surface	<d	<d	<d	<d	<d	<d
N99-153	PMA-2	117	NW-7cm	surface	<d	<d	<d	<d	<d	<d
N99-154	PMA-2	117	N-7cm	surface	<d	<d	<d	<d	<d	<d
N99-155	PMA-2	117	NE	0-2.5	<d	<d	<d	<d	<d	<d
N99-156	PMA-2	117	NE	2.5-5.0	<d	<d	<d	<d	<d	<d
N99-157	PMA-2	117	SE	0-2.5	<d	<d	<d	<d	<d	<d
N99-158	PMA-2	117	SE	2.5-5.0	<d	<d	<d	<d	<d	<d
N99-159	PMA-2	117	SW	0-2.5	<d	<d	<d	<d	<d	<d
N99-160	PMA-2	117	SW	2.5-5.0	<d	<d	<d	<d	<d	<d
N99-161	PMA-2	117	NW	0-2.5	<d	<d	<d	<d	<d	<d
N99-162	PMA-2	117	NW	2.5-5.0	<d	<d	<d	<d	<d	<d
N99-163	PMA-2	117	C	under	5.92	17.6	<d	<d	<d	<d
N99-164	PMA-2	117	W-7cm	surface	<d	<d	<d	<d	<d	<d
N99-165	PMA-2	117	SW	surface	<d	<d	<d	<d	<d	<d
N99-166	PMA-2	144	C	surface	<d	<d	<d	<d	<d	<d
N99-167	PMA-2	144	C	0-2.5	36.6	370	35.9	30.6	32.9	2.63
N99-168	PMA-2	144	NE	surface	<d	<d	<d	<d	<d	5.06
N99-169	PMA-2	144	NE-7cm	surface	<d	<d	<d	<d	<d	<d
N99-170	PMA-2	144	E-7cm	surface	<d	<d	<d	<d	<d	<d
N99-171	PMA-2	144	SE	surface	<d	<d	<d	<d	<d	<d
N99-172	PMA-2	144	SE-7cm	surface	<d	<d	<d	<d	<d	<d
N99-173	PMA-2	144	S-7cm	surface	<d	<d	<d	<d	<d	<d
N99-174	PMA-2	144	SW-7cm	surface	<d	<d	<d	<d	<d	<d
N99-175	PMA-2	144	NW	surface	<d	<d	<d	<d	<d	<d
N99-176	PMA-2	144	NW-7cm	surface	<d	<d	<d	<d	<d	<d
N99-177	PMA-2	144	N-7cm	surface	<d	<d	<d	<d	<d	<d
N99-178	PMA-2	144	NE	0-2.5	<d	<d	<d	<d	<d	<d
N99-179	PMA-2	144	NE	2.5-5.0	<d	<d	<d	<d	<d	<d
N99-180	PMA-2	144	SE	0-2.5	<d	<d	<d	<d	<d	<d
N99-181	PMA-2	144	SE	2.5-5.0	<d	<d	<d	<d	<d	<d
N99-182	PMA-2	144	SW	0-2.5	<d	<d	<d	<d	<d	<d
N99-183	PMA-2	144	SW	2.5-5.0	<d	<d	<d	<d	<d	<d

Concentration in soil (μg/kg)

RDX	*1,3,5-TNB*	*3-NA*	*3,5-DNA*	*2-Am-6-NT*	*2-Am-4-NT*	*4-Am-2-NT*	*TETRYL*	*HMX*	*NB*	*o-NT*	*m-NT*	*p-NT*
<d	<d	<d	<d	<d	<d	<d	<d	<d	<d	<d	<d	<d
9.09	<d	<d	<d	<d	<d	<d	<d	<d	<d	<d	<d	<d
<d	<d	<d	<d	<d	<d	<d	<d	<d	<d	<d	<d	<d
<d	<d	<d	<d	<d	<d	<d	<d	<d	<d	<d	<d	<d
<d	<d	<d	<d	<d	<d	<d	<d	<d	<d	<d	<d	<d
<d	<d	<d	<d	<d	<d	<d	<d	<d	<d	<d	<d	<d
<d	<d	<d	<d	<d	<d	<d	<d	<d	<d	<d	<d	<d
<d	<d	<d	<d	<d	<d	<d	<d	<d	<d	<d	<d	<d
<d	<d	<d	<d	<d	<d	<d	<d	<d	<d	<d	<d	<d
<d	<d	<d	<d	<d	<d	<d	<d	<d	<d	<d	<d	<d
3.19	<d	<d	<d	<d	<d	<d	<d	<d	<d	<d	<d	<d
4.09	<d	<d	<d	<d	<d	<d	<d	<d	<d	<d	<d	<d
<d	4.54	50	21.7	75.1	73.6	21.5	<d	<d	<d	<d	<d	<d
<d	<d	<d	<d	<d	<d	<d	<d	<d	<d	<d	<d	<d
<d	<d	<d	<d	<d	<d	<d	<d	<d	<d	<d	<d	<d
<d	<d	<d	<d	<d	<d	<d	<d	<d	<d	<d	<d	<d
<d	<d	<d	<d	<d	<d	<d	<d	<d	<d	<d	<d	<d
<d	<d	<d	<d	<d	<d	<d	<d	<d	<d	<d	<d	<d
<d	<d	<d	<d	<d	<d	<d	<d	<d	<d	<d	<d	<d
<d	<d	<d	<d	<d	<d	<d	<d	<d	<d	<d	<d	<d
<d	<d	<d	<d	<d	<d	<d	<d	<d	<d	<d	<d	<d
<d	<d	<d	<d	<d	<d	<d	<d	<d	<d	<d	<d	<d
<d	<d	<d	<d	<d	<d	<d	<d	<d	<d	<d	<d	<d
<d	<d	<d	<d	<d	<d	<d	<d	<d	<d	<d	<d	<d
<d	<d	<d	<d	<d	<d	<d	<d	<d	<d	<d	<d	<d
<d	<d	<d	<d	<d	<d	<d	<d	<d	<d	<d	<d	<d
<d	<d	<d	<d	<d	<d	<d	<d	<d	<d	<d	<d	<d
<d	<d	<d	<d	<d	<d	<d	<d	<d	<d	<d	<d	<d
<d	<d	<d	<d	<d	<d	<d	<d	<d	<d	<d	<d	<d
<d	<d	<d	<d	<d	<d	<d	<d	<d	<d	<d	<d	<d
<d	<d	<d	<d	<d	<d	<d	<d	<d	<d	<d	<d	<d
<d	<d	<d	<d	<d	<d	<d	<d	<d	<d	<d	<d	<d
<d	<d	<d	<d	<d	<d	<d	<d	<d	<d	<d	<d	<d
<d	<d	<d	<d	<d	<d	<d	<d	<d	<d	<d	<d	<d
<d	<d	<d	<d	<d	<d	<d	<d	<d	<d	<d	<d	<d
<d	<d	<d	<d	<d	<d	<d	<d	<d	<d	<d	<d	<d
<d	<d	<d	<d	<d	<d	<d	<d	<d	<d	<d	<d	<d
<d	<d	<d	<d	<d	<d	<d	<d	<d	<d	<d	<d	<d
<d	<d	<d	<d	<d	<d	<d	<d	<d	<d	<d	<d	<d
<d	<d	<d	<d	<d	<d	<d	<d	<d	<d	<d	<d	<d
<d	<d	<d	<d	<d	<d	<d	<d	<d	<d	<d	<d	<d
<d	<d	<d	<d	<d	<d	<d	<d	<d	<d	<d	<d	<d
<d	<d	<d	<d	<d	<d	<d	<d	<d	<d	<d	<d	<d
<d	<d	<d	<d	<d	<d	<d	<d	<d	<d	<d	<d	<d
<d	12.9	<d	<d	<d	<d	<d	<d	<d	<d	<d	<d	<d
<d	<d	<d	<d	<d	<d	<d	<d	<d	<d	<d	<d	<d
<d	<d	<d	<d	<d	<d	<d	<d	<d	<d	<d	<d	<d
<d	<d	<d	<d	<d	<d	<d	<d	<d	<d	<d	<d	<d
<d	<d	<d	<d	<d	<d	<d	<d	<d	<d	<d	<d	<d
<d	<d	<d	<d	<d	<d	<d	<d	<d	<d	<d	<d	<d
<d	<d	<d	<d	<d	<d	<d	<d	<d	<d	<d	<d	<d
<d	<d	<d	<d	<d	<d	<d	<d	<d	<d	<d	<d	<d
<d	<d	<d	<d	<d	<d	<d	<d	<d	<d	<d	<d	<d
<d	<d	<d	<d	<d	<d	<d	<d	<d	<d	<d	<d	<d
<d	<d	<d	<d	<d	<d	<d	<d	<d	<d	<d	<d	<d
<d	<d	<d	<d	<d	<d	<d	<d	<d	<d	<d	<d	<d
<d	<d	<d	<d	<d	<d	<d	<d	<d	<d	<d	<d	<d
<d	<d	<d	<d	<d	<d	<d	<d	<d	<d	<d	<d	<d
<d	<d	<d	<d	<d	<d	<d	<d	<d	<d	<d	<d	<d
<d	<d	<d	<d	<d	<d	<d	<d	<d	<d	<d	<d	<d
<d	<d	<d	<d	<d	<d	<d	<d	<d	<d	<d	<d	<d

to contents

Lab sample #	Mine type	EX number	Sample location	Sample depth, cm	Concentration in soil (µg/kg) 1,3-DNB	2,4-DNT	2,4,6-TNT	4-Am-DNT	2-Am-DNT	2,6-DNT
N99-184	PMA-2	144	NW	0-2.5	<d	<d	<d	<d	<d	<d
N99-185	PMA-2	144	NW	2.5-5.0	<d	<d	<d	<d	<d	<d
N99-186	PMA-2	144	C	under	40	69.8	<d	3.47	3.06	1.15
N99-187	PMA-2	144	W-7cm	surface	<d	<d	<d	<d	<d	<d
N99-188	PMA-2	144	SW	surface	<d	<d	<d	<d	<d	<d
N99-189	TMM-1	324	over center	surface	17.2	<d	38.5	68.3	<d	41.6
N99-190	TMM-1	324	over NE	surface	<d	<d	15.3	<d	30.5	79.3
N99-191	TMM-1	324	over SE	surface	<d	<d	<d	<d	<d	<d
N99-192	TMM-1	324	over SW	surface	<d	<d	<d	<d	<d	<d
N99-193	TMM-1	324	over NW	surface	<d	<d	<d	<d	<d	<d
N99-194	TMM-1	324	CM	0-2.5	<d	<d	<d	<d	<d	<d
N99-195	TMM-1	324	CM	2.5-5.0	<d	<d	<d	<d	<d	<d
N99-196	TMM-1	324	NE	surface	<d	<d	<d	<d	<d	<d
N99-197	TMM-1	324	NE-7cm	surface	<d	<d	<d	<d	<d	<d
N99-198	TMM-1	324	E	surface	<d	<d	<d	<d	<d	<d
N99-199	TMM-1	324	E-7cm	surface	<d	<d	<d	<d	<d	<d
N99-200	TMM-1	324	SE	surface	<d	<d	<d	<d	<d	<d
N99-201	TMM-1	324	SE-7cm	surface	<d	<d	<d	<d	<d	<d
N99-202	TMM-1	324	S	surface	<d	<d	<d	<d	<d	<d
N99-203	TMM-1	324	S-7cm	surface	<d	<d	<d	<d	<d	<d
N99-204	TMM-1	324	SW	surface	<d	<d	<d	<d	<d	<d
N99-205	TMM-1	324	SW-7cm	surface	<d	<d	<d	<d	<d	<d
N99-206	TMM-1	324	W	surface	<d	<d	<d	<d	<d	<d
N99-207	TMM-1	324	W-7cm	surface	<d	<d	<d	<d	<d	<d
N99-208	TMM-1	324	NW	surface	<d	<d	<d	<d	<d	<d
N99-209	TMM-1	324	NW-7cm	surface	<d	<d	<d	<d	<d	<d
N99-210	TMM-1	324	N	surface	<d	<d	<d	<d	<d	<d
N99-211	TMM-1	324	N-7cm	surface	<d	<d	<d	<d	<d	<d
N99-212	TMM-1	324	NE	0-2.5	<d	<d	10.2	<d	<d	<d
N99-213	TMM-1	324	NE	2.5-5.0	<d	<d	<d	<d	<d	<d
N99-214	TMM-1	324	NE	5.0-7.5	<d	<d	<d	<d	<d	<d
N99-215	TMM-1	324	SE	0-2.5	<d	<d	<d	<d	<d	<d
N99-216	TMM-1	324	SE	2.5-5.0	<d	<d	<d	<d	<d	<d
N99-217	TMM-1	324	SE	5.0-7.5	<d	1.75	<d	3.35	3.17	<d
N99-218	TMM-1	324	SW	0-2.5	<d	<d	<d	<d	<d	<d
N99-219	TMM-1	324	SW	2.5-5.0	<d	<d	<d	<d	<d	<d
N99-220	TMM-1	324	SW	5.0-7.5	<d	<d	<d	<d	<d	<d
N99-221	TMM-1	324	NW	0-2.5	<d	<d	<d	<d	<d	<d
N99-222	TMM-1	324	NW	2.5-5.0	<d	<d	<d	<d	<d	<d
N99-223	TMM-1	324	NW	5.0-7.5	1.42	1.88	<d	4.55	<d	<d
N99-224	TMM-1	324	C	under	<d	3.84	<d	<d	<d	<d
N99-225	TMM-1	324	NE	under	<d	<d	<d	<d	<d	<d
N99-226	TMM-1	324	SE	under	<d	<d	<d	<d	<d	<d
N99-227	TMM-1	324	SW	under	1.59	13.6	<d	<d	<d	0.374
N99-228	TMM-1	324	NW	under	<d	<d	<d	<d	<d	<d
N99-229	TMM-1	319	over center	surface	<d	<d	<d	<d	<d	<d
N99-230	TMM-1	319	over NE	surface	<d	<d	<d	<d	<d	<d
N99-231	TMM-1	319	over SE	surface	<d	<d	<d	<d	<d	<d
N99-232	TMM-1	319	over SW	surface	<d	<d	<d	<d	<d	<d
N99-233	TMM-1	319	over NW	surface	<d	<d	<d	<d	<d	<d
N99-234	TMM-1	319	CM	0-2.5	<d	<d	<d	<d	<d	<d
N99-235	TMM-1	319	CM	2.5-5.0	<d	3.49	<d	3.43	3.19	<d
N99-236	TMM-1	319	NE	surface	<d	<d	<d	<d	<d	<d
N99-237	TMM-1	319	NE-7cm	surface	<d	<d	<d	<d	<d	<d
N99-238	TMM-1	319	E	surface	<d	<d	<d	<d	<d	<d
N99-239	TMM-1	319	E-7cm	surface	<d	<d	<d	<d	<d	<d
N99-240	TMM-1	319	SE	surface	<d	<d	<d	<d	<d	<d
N99-241	TMM-1	319	SE-7cm	surface	<d	<d	<d	<d	<d	<d
N99-242	TMM-1	319	S	surface	<d	<d	<d	<d	<d	<d
N99-243	TMM-1	319	S-7cm	surface	<d	<d	<d	<d	<d	<d
N99-244	TMM-1	319	SW	surface	<d	<d	<d	<d	<d	<d

to contents

Concentration in soil (µg/kg)

RDX	*1,3,5-TNB*	*3-NA*	*3,5-DNA*	*2-Am-6-NT*	*2-Am-4-NT*	*4-Am-2-NT*	*TETRYL*	*HMX*	*NB*	*o-NT*	*m-NT*	*p-NT*
<d	<d	<d	<d	<d	<d	<d	<d	<d	<d	<d	<d	<d
<d	<d	<d	<d	<d	<d	<d	<d	<d	<d	<d	<d	<d
<d	<d	<d	<d	<d	<d	<d	<d	<d	<d	<d	<d	<d
<d	<d	<d	<d	<d	<d	<d	<d	<d	<d	<d	<d	<d
<d	<d	<d	<d	<d	<d	<d	<d	<d	<d	<d	<d	<d
<d	<d	<d	<d	<d	<d	<d	<d	<d	<d	<d	<d	<d
<d	<d	16.6	<d	45.6	<d	<d	<d	<d	<d	<d	<d	<d
<d	<d	<d	<d	<d	<d	<d	<d	<d	<d	<d	<d	<d
<d	<d	<d	<d	<d	<d	<d	<d	<d	<d	<d	<d	<d
<d	<d	<d	<d	<d	<d	<d	<d	<d	<d	<d	<d	<d
<d	<d	<d	<d	<d	<d	<d	<d	<d	<d	<d	<d	<d
<d	<d	<d	<d	<d	<d	<d	<d	<d	<d	<d	<d	<d
<d	<d	<d	<d	<d	<d	<d	<d	<d	<d	<d	<d	<d
<d	<d	<d	<d	<d	<d	<d	<d	<d	<d	<d	<d	<d
<d	<d	<d	<d	<d	<d	<d	<d	<d	<d	<d	<d	<d
<d	<d	<d	<d	<d	<d	<d	<d	<d	<d	<d	<d	<d
<d	<d	<d	<d	<d	<d	<d	<d	<d	<d	<d	<d	<d
<d	<d	<d	<d	<d	<d	<d	<d	<d	<d	<d	<d	<d
<d	<d	<d	<d	<d	<d	<d	<d	<d	<d	<d	<d	<d
<d	<d	<d	<d	<d	<d	<d	<d	<d	<d	<d	<d	<d
<d	<d	<d	<d	<d	<d	<d	<d	<d	<d	<d	<d	<d
<d	<d	<d	<d	<d	<d	<d	<d	<d	<d	<d	<d	<d
<d	<d	<d	<d	<d	<d	<d	<d	<d	<d	<d	<d	<d
<d	<d	<d	<d	<d	<d	<d	<d	<d	<d	<d	<d	<d
<d	<d	<d	<d	<d	<d	<d	<d	<d	<d	<d	<d	<d
<d	<d	<d	<d	<d	<d	<d	<d	<d	<d	<d	<d	<d
<d	<d	<d	<d	<d	<d	<d	<d	<d	<d	<d	<d	<d
<d	<d	<d	<d	<d	<d	<d	<d	<d	<d	<d	<d	<d
<d	<d	<d	<d	<d	<d	<d	<d	<d	<d	<d	<d	<d
<d	<d	<d	<d	<d	<d	<d	<d	<d	<d	<d	<d	<d
<d	<d	<d	<d	<d	<d	<d	<d	<d	<d	<d	<d	<d
<d	<d	<d	<d	<d	<d	<d	<d	<d	<d	<d	<d	<d
<d	<d	<d	<d	<d	<d	<d	<d	<d	<d	<d	<d	<d
<d	<d	<d	<d	<d	<d	<d	<d	<d	<d	<d	<d	<d
<d	<d	<d	<d	<d	<d	<d	<d	<d	<d	<d	<d	<d
<d	<d	<d	<d	<d	<d	<d	<d	<d	<d	<d	<d	<d
<d	<d	<d	<d	<d	<d	<d	<d	<d	<d	<d	<d	<d
<d	<d	<d	<d	<d	<d	<d	<d	<d	<d	<d	<d	<d
<d	<d	<d	<d	<d	<d	<d	<d	<d	<d	<d	<d	<d
<d	<d	<d	<d	<d	<d	<d	<d	<d	<d	<d	<d	<d
<d	<d	<d	<d	<d	<d	<d	<d	<d	<d	<d	<d	<d
<d	<d	<d	<d	<d	<d	<d	<d	<d	<d	<d	<d	<d
<d	<d	<d	<d	<d	<d	<d	<d	<d	<d	<d	<d	<d
<d	<d	<d	<d	<d	<d	<d	<d	<d	<d	<d	<d	<d
<d	<d	<d	<d	<d	<d	<d	<d	<d	<d	<d	<d	<d
<d	<d	<d	<d	<d	<d	<d	<d	<d	<d	<d	<d	<d
<d	<d	<d	<d	<d	<d	<d	<d	<d	<d	<d	<d	<d
<d	<d	<d	<d	<d	<d	<d	<d	<d	<d	<d	<d	<d
<d	<d	<d	<d	<d	<d	<d	<d	<d	<d	<d	<d	<d
<d	<d	<d	<d	<d	<d	<d	<d	<d	<d	<d	<d	<d
<d	<d	<d	<d	<d	<d	<d	<d	<d	<d	<d	<d	<d
<d	<d	<d	<d	<d	<d	<d	<d	<d	<d	<d	<d	<d
<d	<d	<d	<d	<d	<d	<d	<d	<d	<d	<d	<d	<d
<d	<d	<d	<d	<d	<d	<d	<d	<d	<d	<d	<d	<d
<d	<d	<d	<d	<d	<d	<d	<d	<d	<d	<d	<d	<d
<d	<d	<d	<d	<d	<d	<d	<d	<d	<d	<d	<d	<d

to contents

Lab sample #	Mine type	EX number	Sample location	Sample depth, cm	Concentration in soil (µg/kg) 1,3-DNB	2,4-DNT	2,4,6-TNT	4-Am-DNT	2-Am-DNT	2,6-DNT
N99-245	TMM-1	319	SW-7cm	surface	<d	<d	<d	<d	<d	<d
N99-246	TMM-1	319	W	surface	<d	<d	<d	<d	<d	<d
N99-247	TMM-1	319	W-7cm	surface	<d	<d	<d	<d	<d	<d
N99-248	TMM-1	319	NW	surface	<d	<d	<d	<d	<d	<d
N99-249	TMM-1	319	NW-7cm	surface	<d	<d	<d	<d	<d	<d
N99-250	TMM-1	319	N	surface	<d	<d	<d	<d	<d	<d
N99-251	TMM-1	319	N-7cm	surface	<d	<d	<d	<d	<d	<d
N99-252	TMM-1	319	NE	0-2.5	<d	<d	<d	<d	<d	<d
N99-253	TMM-1	319	NE	2.5-5.0	<d	<d	<d	0.7	<d	<d
N99-254	TMM-1	319	NE	5.0-7.5	<d	<d	<d	1.07	0.588	<d
N99-255	TMM-1	319	SE	0-2.5	<d	<d	<d	<d	<d	<d
N99-256	TMM-1	319	SE	2.5-5.0	<d	<d	<d	<d	<d	<d
N99-257	TMM-1	319	SE	5.0-7.5	<d	<d	<d	<d	<d	<d
N99-258	TMM-1	319	SW	0-2.5	<d	<d	<d	<d	<d	<d
N99-259	TMM-1	319	SW	2.5-5.0	<d	<d	<d	<d	<d	<d
N99-260	TMM-1	319	SW	5.0-7.5	<d	<d	<d	<d	<d	<d
N99-261	TMM-1	319	NW	0-2.5	<d	<d	<d	<d	<d	<d
N99-262	TMM-1	319	NW	2.5-5.0	<d	<d	<d	<d	<d	<d
N99-263	TMM-1	319	NW	5.0-7.5	<d	0.33	9.82	1.11	0.098	<d
N99-264	TMM-1	319	C	under	0.988	69	<d	8.93	1.76	0.35
N99-265	TMM-1	319	NE	under	<d	3.79	0.453	5.9	2.02	<d
N99-266	TMM-1	319	SE	under	<d	17.5	<d	13.6	4.65	<d
N99-267	TMM-1	319	SW	under	<d	4.94	<d	<d	<d	<d
N99-268	TMM-1	319	NW	under	<d	2.68	<d	9.43	3.93	<d
N99-269	TYPE 72	764	over center	surface	<d	<d	<d	<d	<d	<d
N99-270	TYPE 72	764	over NE	surface	<d	<d	<d	<d	<d	<d
N99-271	TYPE 72	764	over SE	surface	<d	<d	<d	0.678	0.448	<d
N99-272	TYPE 72	764	over SW	surface	<d	<d	<d	<d	<d	<d
N99-273	TYPE 72	764	over NW	surface	<d	<d	<d	<d	<d	<d
N99-274	TYPE 72	764	over center	0-2.5	<d	<d	<d	<d	<d	<d
N99-275	TYPE 72	764	over center	2.5-5.0	<d	<d	<d	<d	<d	<d
N99-276	TYPE 72	764	NE	surface	<d	<d	<d	<d	<d	<d
N99-277	TYPE 72	764	NE-7cm	surface	<d	<d	<d	<d	<d	<d
N99-278	TYPE 72	764	E	surface	<d	<d	<d	<d	<d	0.12
N99-279	TYPE 72	764	E-7cm	surface	<d	<d	<d	<d	<d	<d
N99-280	TYPE 72	764	SE	surface	<d	<d	<d	0.53	0.1	<d
N99-281	TYPE 72	764	SE-7cm	surface	<d	<d	<d	<d	<d	<d
N99-282	TYPE 72	764	S	surface	<d	<d	<d	<d	<d	0.133
N99-283	TYPE 72	764	S-7cm	surface	<d	<d	<d	<d	<d	<d
N99-284	TYPE 72	764	SW	surface	<d	<d	<d	<d	<d	<d
N99-285	TYPE 72	764	SW-7cm	surface	<d	<d	<d	<d	<d	<d
N99-286	TYPE 72	764	W	surface	<d	<d	<d	0.035	<d	<d
N99-287	TYPE 72	764	W-7cm	surface	<d	<d	<d	<d	<d	<d
N99-288	TYPE 72	764	NW	surface	<d	<d	<d	<d	<d	<d
N99-289	TYPE 72	764	NW-7cm	surface	<d	<d	<d	<d	<d	<d
N99-290	TYPE 72	764	N	surface	<d	<d	<d	<d	<d	0.178
N99-291	TYPE 72	764	N-7cm	surface	<d	<d	<d	<d	<d	<d
N99-292	TYPE 72	764	NE	0-2.5	<d	<d	<d	<d	<d	<d
N99-293	TYPE 72	764	NE	2.5-5.0	<d	<d	<d	<d	<d	<d
N99-294	TYPE 72	764	NE	5.0-7.5	<d	<d	<d	<d	<d	<d
N99-295	TYPE 72	764	SE	0-2.5	<d	<d	<d	<d	<d	<d
N99-296	TYPE 72	764	SE	2.5-5.0	<d	<d	<d	<d	<d	<d
N99-297	TYPE 72	764	SE	5.0-7.5	<d	<d	<d	<d	<d	<d
N99-298	TYPE 72	764	SW	0-2.5	<d	<d	<d	<d	<d	<d
N99-299	TYPE 72	764	SW	2.5-5.0	<d	<d	<d	<d	<d	<d
N99-300	TYPE 72	764	SW	5.0-7.5	<d	<d	<d	<d	<d	<d
N99-301	TYPE 72	764	NW	0-2.5	<d	<d	<d	<d	<d	<d
N99-302	TYPE 72	764	NW	2.5-5.0	<d	<d	<d	<d	<d	<d
N99-303	TYPE 72	764	NW	5.0-7.5	<d	<d	<d	<d	<d	<d
N99-304	TYPE 72	764	center	under	<d	3.21	2.57	2.89	2.01	0.185
N99-305	TYPE 72	764	NE	under	<d	<d	<d	<d	<d	<d
N99-306	TYPE 72	764	SE	under	<d	8.66	4.86	4.57	5.7	0.415

Concentration in soil (µg/kg)

RDX	*1,3,5-TNB*	*3-NA*	*3,5-DNA*	*2-Am-6-NT*	*2-Am-4-NT*	*4-Am-2-NT*	*TETRYL*	*HMX*	*NB*	*o-NT*	*m-NT*	*p-NT*
<d	<d	<d	<d	<d	<d	<d	<d	<d	<d	<d	<d	<d
<d	<d	<d	<d	<d	<d	<d	<d	<d	<d	<d	<d	<d
<d	<d	<d	<d	<d	<d	<d	<d	<d	<d	<d	<d	<d
<d	<d	<d	<d	<d	<d	<d	<d	<d	<d	<d	<d	<d
<d	<d	<d	<d	<d	<d	<d	<d	<d	<d	<d	<d	<d
<d	<d	<d	<d	<d	<d	<d	<d	<d	<d	<d	<d	<d
<d	<d	<d	<d	<d	<d	<d	<d	<d	<d	<d	<d	<d
<d	<d	<d	<d	<d	<d	<d	<d	<d	<d	<d	<d	<d
0.953	<d	<d	<d	<d	<d	<d	<d	<d	<d	<d	<d	<d
<d	<d	<d	<d	<d	<d	<d	<d	<d	<d	<d	<d	<d
<d	<d	<d	<d	<d	<d	<d	<d	<d	<d	<d	<d	<d
<d	<d	<d	<d	<d	<d	<d	<d	<d	<d	<d	<d	<d
<d	<d	<d	<d	<d	<d	<d	<d	<d	<d	<d	<d	<d
<d	<d	<d	<d	<d	<d	<d	<d	<d	<d	<d	<d	<d
<d	<d	<d	<d	<d	<d	<d	<d	<d	<d	<d	<d	<d
0.925	<d	<d	<d	<d	<d	<d	<d	<d	<d	<d	<d	<d
<d	<d	<d	<d	<d	<d	<d	<d	<d	<d	<d	<d	<d
<d	<d	<d	<d	<d	<d	<d	<d	<d	<d	<d	<d	<d
<d	<d	<d	<d	<d	<d	<d	<d	<d	<d	<d	<d	<d
<d	<d	<d	<d	<d	<d	<d	<d	<d	<d	<d	<d	<d
<d	<d	<d	<d	<d	<d	<d	<d	<d	<d	<d	<d	<d
1.45	<d	<d	<d	<d	<d	<d	<d	<d	<d	<d	<d	<d
<d	<d	<d	<d	<d	<d	<d	<d	<d	<d	<d	<d	<d
1.47	<d	<d	<d	<d	<d	<d	<d	<d	<d	<d	<d	<d
<d	<d	<d	<d	<d	<d	<d	<d	<d	<d	<d	<d	<d
<d	<d	<d	<d	<d	<d	<d	<d	<d	<d	<d	<d	<d
<d	<d	<d	<d	<d	<d	<d	<d	<d	<d	<d	<d	<d
<d	<d	<d	<d	<d	<d	<d	<d	<d	<d	<d	<d	<d
<d	<d	<d	<d	<d	<d	<d	<d	<d	<d	<d	<d	<d
<d	<d	<d	<d	<d	<d	<d	<d	<d	<d	<d	<d	<d
<d	<d	<d	<d	<d	<d	<d	<d	<d	<d	<d	<d	<d
<d	<d	<d	<d	<d	<d	<d	<d	<d	<d	<d	<d	<d
<d	<d	<d	<d	<d	<d	<d	<d	<d	<d	<d	<d	<d
1.62	<d	<d	<d	<d	<d	<d	<d	<d	<d	<d	<d	<d
<d	<d	<d	<d	<d	<d	<d	<d	<d	<d	<d	<d	<d
<d	<d	<d	<d	<d	<d	<d	<d	<d	<d	<d	<d	<d
<d	<d	<d	<d	<d	<d	<d	<d	<d	<d	<d	<d	<d
<d	<d	<d	<d	<d	<d	<d	<d	<d	<d	<d	<d	<d
<d	<d	<d	<d	<d	<d	<d	<d	<d	<d	<d	<d	<d
<d	<d	<d	<d	<d	<d	<d	<d	<d	<d	<d	<d	<d
<d	<d	<d	<d	<d	<d	<d	<d	<d	<d	<d	<d	<d
<d	<d	<d	<d	<d	<d	<d	<d	<d	<d	<d	<d	<d
<d	<d	<d	<d	<d	<d	<d	<d	<d	<d	<d	<d	<d
<d	<d	<d	<d	<d	<d	<d	<d	<d	<d	<d	<d	<d
<d	<d	<d	<d	<d	<d	<d	<d	<d	<d	<d	<d	<d
<d	<d	<d	<d	<d	<d	<d	<d	<d	<d	<d	<d	<d
<d	<d	<d	<d	<d	<d	<d	<d	<d	<d	<d	<d	<d
<d	<d	<d	<d	<d	<d	<d	<d	<d	<d	<d	<d	<d
<d	<d	<d	<d	<d	<d	<d	<d	<d	<d	<d	<d	<d
<d	<d	<d	<d	<d	<d	<d	<d	<d	<d	<d	<d	<d
<d	<d	<d	<d	<d	<d	<d	<d	<d	<d	<d	<d	<d
<d	<d	<d	<d	<d	<d	<d	<d	<d	<d	<d	<d	<d
<d	<d	<d	<d	<d	<d	<d	<d	<d	<d	<d	<d	<d
<d	<d	<d	<d	<d	<d	<d	<d	<d	<d	<d	<d	<d
<d	<d	<d	<d	<d	<d	<d	<d	<d	<d	<d	<d	<d
<d	<d	<d	<d	<d	<d	<d	<d	<d	<d	<d	<d	<d
<d	<d	<d	<d	<d	<d	<d	<d	<d	<d	<d	<d	<d
<d	<d	<d	<d	<d	<d	<d	<d	<d	<d	<d	<d	<d
<d	<d	<d	<d	<d	<d	<d	<d	<d	<d	<d	<d	<d
<d	<d	<d	<d	<d	<d	<d	<d	<d	<d	<d	<d	<d
7.23	<d	<d	<d	<d	<d	<d	<d	<d	<d	<d	<d	<d
<d	<d	<d	<d	<d	<d	<d	<d	<d	<d	<d	<d	<d
30.5	1.23	<d	<d	<d	<d	<d	<d	<d	<d	<d	<d	<d

to contents

Lab sample #	Mine type	EX number	Sample location	Sample depth, cm	Concentration in soil (µg/kg) 1,3-DNB	2,4-DNT	2,4,6-TNT	4-Am-DNT	2-Am-DNT	2,6-DNT
N99-307	TYPE 72	764	SW	under	<d	1.26	1.85	<d	<d	<d
N99-308	TYPE 72	764	NW	under	<d	<d	<d	<d	<d	1.72
Selected surface samples analyzed by HPLC to confirm that 3-NA is not detected at the surface.										
N99-12	TMA-5	256	SE	surface	<d	39.8	<d	62.8	59.7	<d
N99-13	TMA-5	256	SE-7cm	surface	<d	74.8	<d	133	149	<d
N99-14	TMA-5	256	S	surface	<d	<d	<d	51	58.2	<d
N99-15	TMA-5	256	S-7cm	surface	<d	<d	<d	<d	46.9	<d
N99-16	TMA-5	256	SW	surface	<d	<d	<d	<d	<d	<d
N99-17	TMA-5	256	SW-7cm	surface	<d	<d	<d	<d	<d	<d
N99-50	TMA-5	261	E	surface	<d	<d	<d	<d	<d	<d
N99-51	TMA-5	261	E-7cm	surface	<d	<d	<d	<d	58.7	<d
N99-52	TMA-5	261	SE	surface	<d	<d	<d	57.2	75	<d
N99-53	TMA-5	261	SE-7cm	surface	<d	164	<d	282	323	100
N99-54	TMA-5	261	S	surface	<d	<d	<d	<d	<d	<d

							Concentration in soil (µg/kg)					
RDX	*1,3,5-TNB*	*3-NA*	*3,5-DNA*	*2-Am-6-NT*	*2-Am-4-NT*	*4-Am-2-NT*	*TETRYL*	*HMX*	*NB*	*o-NT*	*m-NT*	*p-NT*
8.26	0.89	<d	<d	<d	<d	<d	<d	<d	<d	<d	<d	<d
<d	<d	<d	<d	<d	<d	<d	<d	<d	<d	<d	<d	<d
<d	<d	<d	<d	<d	<d	<d	<d	<d	<d	<d	<d	<d
<d	<d	<d	<d	<d	<d	<d	<d	<d	<d	<d	<d	<d
<d	<d	<d	<d	<d	<d	<d	<d	<d	<d	<d	<d	<d
<d	<d	<d	<d	<d	<d	<d	<d	<d	<d	<d	<d	<d
<d	<d	<d	<d	<d	<d	<d	<d	<d	<d	<d	<d	<d
<d	<d	<d	<d	<d	<d	<d	<d	<d	<d	<d	<d	<d
<d	<d	<d	<d	<d	<d	<d	<d	<d	<d	<d	<d	<d
<d	<d	<d	<d	<d	<d	<d	<d	<d	<d	<d	<d	<d
<d	<d	<d	<d	<d	<d	<d	<d	<d	<d	<d	<d	<d
<d	<d	<d	13	<d	<d	<d	<d	<d	<d	<d	<d	<d
<d	<d	<d	<d	<d	<d	<d	<d	<d	<d	<d	<d	<d

to contents

REPORT DOCUMENTATION PAGE

Form Approved
OMB No. 0704-0188

Public reporting burden for this collection of information is estimated to average 1 hour per response, including the time for reviewing instructions, searching existing data sources, gathering and maintaining the data needed, and completing and reviewing this collection of information. Send comments regarding this burden estimate or any other aspect of this collection of information, including suggestions for reducing this burden to Department of Defense, Washington Headquarters Services, Directorate for Information Operations and Reports (0704-0188), 1215 Jefferson Davis Highway, Suite 1204, Arlington, VA 22202-4302. Respondents should be aware that notwithstanding any other provision of law, no person shall be subject to any penalty for failing to comply with a collection of information if it does not display a currently valid OMB control number. PLEASE DO NOT RETURN YOUR FORM TO THE ABOVE ADDRESS.

1. REPORT DATE *(DD-MM-YY)*
August 2000

2. REPORT TYPE
Technical Report

3. DATES COVERED *(From - To)*

4. TITLE AND SUBTITLE

Analysis of Explosives-Related Chemical Signatures in Soil Samples Collected Near Buried Land Mines

5a. CONTRACT NUMBER

5b. GRANT NUMBER

5c. PROGRAM ELEMENT NUMBER

6. AUTHOR(S)

Thomas F. Jenkins, Marianne E. Walsh, Paul H. Miyares, Jessica A. Kopczynski, Thomas A. Ranney, Vivian George, Judith C. Pennington, and Thomas E. Berry, Jr.

5d. PROJECT NUMBER

5e. TASK NUMBER

5f. WORK UNIT NUMBER

7. PERFORMING ORGANIZATION NAME(S) AND ADDRESS(ES)

U.S. Army Engineer Research and Development Center
Cold Regions Research and Engineering Laboratory
72 Lyme Road
Hanover, New Hampshire 03755-1290

Environmental Laboratory
3909 Halls Ferry Rd.
Vicksburg, Mississippi

8. PERFORMING ORGANIZATION REPORT NUMBER

ERDC TR-00-5

9. SPONSORING/MONITORING AGENCY NAME(S) AND ADDRESS(ES)

Defense Advanced Research Projects Agency
3701 Fairfax Drive
Arlington, VA 22203

10. SPONSOR / MONITOR'S ACRONYM(S)

11. SPONSOR / MONITOR'S REPORT NUMBER(S)

12. DISTRIBUTION / AVAILABILITY STATEMENT

Approved for public release; distribution is unlimited.

Available from NTIS, Springfield, Virginia 22161.

13. SUPPLEMENTARY NOTES

14. ABSTRACT

Over 1000 soil samples were collected at the surface and at depth near buried TMA-5, TMM-1, PMA-1A, PMA-2, and Type 72 land mines at a research minefield at Fort Leonard Wood, Missouri, in 1998 and 1999. Soil samples were extracted with acetonitrile and analyzed by GC-ECD for nitroaromatic, nitramine, and aminonitroaromatic compounds to determine the concentrations of explosives-related chemical (ERC) signatures that collect in soil near buried land mines. The most often detected 20 different ERC compounds were 2,4-dinitrotoluene (2,4-DNT), 2,4,6-trinitrotoluene (2,4,6-TNT), and two environmental transformation products of 2,4,6-TNT: 2-amino-4,6-dinitrotoluene (2-ADNT) and 4-amino-2,6-dinitrotoluene (4-ADNT). Generally, in surface soils, either 2-ADNT, 4-ADNT, or 2,4-DNT were the ERCs most often detected and were present at the highest concentrations. ERCs were much more prevalent near TMA-5 and PMA-1A land mines than TMM-1 and PMA-2 mines. ERCs were spatially heterogeneous in soil, but were found most often in a discontinuous cylinder around the perimeters of the mines, under the mines, and in a discontinuous halo in the surface soil. It appears that the frequency of detection of ERCs in soil near the TMA-5 and PMA-1A mines is continuing to increase with time. Soil/air partition coefficients, estimated for ERC analytes using explosives-contaminated soil from the research minefield, and the median values for these compounds, estimated in the surface soils, were used to predict the concentrations of ERCs in the boundary layer air above buried TMA-5 and PMA-1A mines. 2,4-DNT and the two isomers of ADNT give the greatest promise for success in chemically detecting buried mines.

15. SUBJECT TERMS

Chemical detection	Explosives	Mine detection	Soil/air partition coefficients	TMM-1
Chemical signatures	Explosives fate and transport	PMA-1A	Soil analysis	TNT
DARPA	Land mine detection	PMA-2	TMA-5	Type 72

16. SECURITY CLASSIFICATION OF:			17. LIMITATION OF ABSTRACT	18. NUMBER OF PAGES	19a. NAME OF RESPONSIBLE PERSON
a. REPORT	b. ABSTRACT	c. THIS PAGE			19b. TELEPHONE NUMBER *(include area code)*
U	U	U	U	85	

to contents

Standard Form 298 (Rev. 8-98)
Prescribed by ANSI Std. 239.18