FINAL REPORT

ELECTRIC DRIVE M113 VEHICLE REFURBISHMENT PROJECT

SACRAMENTO ELECTRIC TRANSPORTATION CONSORTIUM RA 93-23 PROGRAM

FEBRUARY 1997

19970311 024

DISTRIBUTION STATEMENT A
Approved for public release;
Distribution Unlimited

DTIC QUALITY INSPECTED 3

FINAL REPORT

ELECTRIC DRIVE M113 VEHICLE REFURBISHMENT PROJECT

SACRAMENTO ELECTRIC TRANSPORTATION CONSORTIUM RA 93-23 PROGRAM

FEBRUARY 1997

DTIC QUALITY INSPECTED 3

FINAL REPORT

ELECTRIC DRIVE M113 VEHICLE REFURBISHMENT PROJECT

ABSTRACT

The Electric Drive M113 Refurbishment Project involved upgrading an existing M113 personnel carrier with updated electronics to meet current safety and performance standards. Several specific areas were refurbished, including design and installation of an improved power converter and motor controller assembly.

The original design obtained propulsion power from only the engine driven gen-set. The vehicle was modified for "engine-off" operation using battery power only. The vehicle was tested and demonstrated at a number of DARPA conferences and other locations, under the purview of Tank Automotive Command (TACOM).

The cover report by the Sacramento Electric Transportation Consortium management essentially refers to the attached Appendix A Final Report by United Defense/FMC for all specific information on the activities and findings of the Project.

INTRODUCTION AND OBJECTIVES

The M113 Refurbishment Project was initiated by DARPA to demonstrate the capabilities of current electric drive technologies in a military vehicle. This was an extremely economical initial step in advancing battery and hybrid drives for military use.

As the entire Project was carried out by FMC/United Defense and TACOM, this Final Report will serve only as a cover report for the Final Report prepared by FMC/United Defense, included as Attachment A. The Project was very successful in demonstrating the advantages of electric drive systems in medium duty vehicles.

SUMMARY AND CONCLUSIONS

As this Project essentially involved a first phase of work for the M113 platform, conclusions on the performance of the technologies involved are limited, primarily resulting in recommendations on the next activities to consider for development of system and design improvements. See the attached Appendix A Report for detailed information on these and other conclusions of the Project.

ADMINISTRATIVE ACTIVITIES AND PROJECT EXPENDITURES

The Project spanned two years time, with the vehicle in the possession of TACOM primarily. The term of the SETC RA 93-23 Grant was extended at the time this Project was added to the Grant to provide two full years of use by the Project, under the purview of TACOM.

Expenditures for the Project were generally as planned and approved. A significant increase in matching costs was incurred by United Defense/FMC due to DARPA requested vehicle preparation and logistical support.

Overall Project expenditures totaled over $525,000, with $220,000 being DARPA funds. Each quarterly/triennial/biennial DARPA conference over the term of the Project was attended by SMUD and by a representative of United Defense/FMC.

Sacramento Municipal Utility District
Electric Drive M113 Vehicle Refurbishment Project

Final Report

Prepared for:

Sacramento Municipal Utility District
Mr. Steve Rutter, Principal Engineer
Electric Transportation Department
PO Box 15830 - MS 30A
Sacramento, CA 95817-1899

SMUD Contract Number F-379
FMC Project Number D901

Prepared by: Gordon Shafer	FMC ELECTRIC DRIVE SYSTEMS
Approved by: Michael Rowan	FMC Corporation Energy & Transportation Equipment Group 1205 Coleman Avenue Santa Clara, CA 95052

Table of Contents

SECTION 1. EXECUTIVE SUMMARY....1

SECTION 2. PROJECT OBJECTIVES....2

2.1 BACKGROUND....2
2.2 M113 PROJECT OVERVIEW....3
2.3 STATEMENT OF WORK....4
2.3.1 Original Task List from Contract F-379....4
2.3.2 Verbal Changes to Statement of Work....5
2.4 PROJECT SCHEDULE....5
2.5 PROJECT ORGANIZATION....6

SECTION 3. SYSTEM DESCRIPTION....7

3.1 M113 PERSONNEL CARRIER....7
3.2 ELECTRIC PROPULSION SYSTEM....7
3.3 DRIVE MOTOR PACKAGE....8
3.4 AUXILIARY POWER GENERATION UNIT....10
3.5 POWER CONVERTER ASSEMBLY....12
3.5.1 Power Converter Arrangement and Topology....12
3.5.3 Induction Motor Control Board(s)....17
3.5.4 Vehicle Control Board....19
3.5.5 Power Converter Cooling System....21
3.5.6 Power Converter Enclosure and Mounting Structure....23
3.6 BATTERY INSTALLATION....24
3.6.1 240 VDC Battery Pack....24
3.6.2 360 VDC Battery Pack....25
3.7 VEHICLE POWER DISTRIBUTION....25
3.8 DRIVER'S STATION....27
3.9 VEHICLE COOLING SYSTEM....28
3.10 M113 SUSPENSION AND TRACK....29

SECTION 4. VEHICLE PERFORMANCE....31

4.1 ELECTRIC PROPULSION SYSTEM SPECIFICATIONS....31
4.2 PREDICTED VEHICLE PERFORMANCE....32
4.2.1 Speed-On-Grade....32
4.2.2 Acceleration....33

SECTION 5. TESTING AND DEMONSTRATION....34

5.1 VEHICLE TESTING....34
5.2 VEHICLE DEMONSTRATIONS....34

SECTION 6. CONCLUSIONS AND RECOMMENDATIONS....35

6.1 HORIZON LEAD-ACID BATTERIES....35
6.2 PROPULSION SYSTEM REPACKAGING....37
6.3 HYBRID OPERATION....38
6.4 QUIMPAX BAND TRACK....38
6.5 TEST AND EVALUATION....39

Section 1. EXECUTIVE SUMMARY

This final technical report, prepared by FMC Corporation Corporate Technology Center for the Sacramento Municipal Utility District under Contract F-379, describes the execution of the Electric Drive M113 Vehicle Refurbishment Project.

The M113 Vehicle Refurbishment Project is part of the Advanced Research Projects Agency (ARPA) Electric and Electric Hybrid Vehicle Technology program. Established in 1993, this program pursues development and demonstrations of technologies for electric and hybrid vehicles that address military missions and cost mitigation. The Sacramento Municipal Utility District (SMUD) is one of six regional consortia selected to participate in the program.

The overall goal of the M113 Vehicle Refurbishment Project was to bring the existing FMC-owned M113 mechanical drive vehicle up to current standards for safety and performance. Several specific areas were targeted for refurbishment which included the design and installation of an improved power converter and motor controller assembly. The original scope of work was amended after the start of the project to include tasks to install two (2) battery packs to allow "engine-off" operation.

The project was completed on schedule and the refurbished vehicle was demonstrated at several ARPA and TACOM sponsored events during the remainder of the contract period. Although no rigorous performance testing of the vehicle was performed, the refurbished M113 demonstrated automotive performance equal to and/or greater than the original mechanical drive M113 vehicle.

Several recommendations resulted from the effort, including recommendations to 1) further upgrade the vehicle to include advanced battery technologies; 2) repackage the batteries to optimize available space; and 3) perform controlled automotive and dynamometer testing to quantify system performance.

Section 2. PROJECT OBJECTIVES

2.1 Background

The Electric Hybrid Vehicle Technology Program

The ARPA Electric and Hybrid Vehicle Technology Program pursues research, development, and demonstrations of technologies for electric and hybrid vehicles that address military missions, modernization, and cost mitigation.

Established by Congress in 1993, the program has accelerated technology development in multiple efforts to respond to increasing electrical power demands of military vehicles and sub-systems, enhance national energy security, and comply with Federal clean air legislation.

Hybrid electric propulsion is identified as a key technology having the following:

- Potential to increase component placement flexibility within vehicles
- Increase fuel economy by continuously operating smaller engines under optimum conditions
- Reduce armor protected volume
- Increase overall power density by combining power generation for weapons, sensors, survivability subsystems, and propulsion systems
- Increase acceleration and maneuverability due to immediate torque to the tracks
- Reduce vehicle thermal and acoustic signatures when operating from on-board energy storage
- Reduce system costs and logistics requirements through component commonalty, industrial stability, and production volume leveraging with commercial suppliers

ARPA Program Approach

The Department of Defense Advanced Research Projects Agency (ARPA) has a decentralized management approach and works directly with seven regional consortia. These diverse consortia provide a minimum of 50% of the funding and work cooperatively to address the challenges of developing electric and hybrid vehicle technologies. Participants include military laboratories, military bases, state and local governments, defense contractors, well-established and startup manufacturers of vehicles and components, electric and gas utilities, public interest groups, and universities.

The technology development is focused on high, specific power engine/generator sets (including turbines and fuel cells), power control devices (including high-performance power semiconductors, cooling systems, control algorithms, and circuit integration and packaging), energy storage devices (including advanced batteries, rapid battery recharging, flywheels, and capacitors), electromechanical conversion (including alternating current, direct current, and linear motors), and lightweight high-strength materials (including space-frames and composites).

Sacramento Electric Transportation Consortium

The Sacramento Municipal Utility District (SMUD) has taken a clear leadership role in electric transportation research and development. This venture seeks to provide for a stronger national defense through economic and energy security and to develop advanced, efficient electric vehicle components and charging infrastructure to minimize utility system impacts of military and civilian electric vehicle charging.

2.2 M113 Project Overview

The objective of this project is to upgrade the FMC Electric Drive M113 so that it can be included as one of the showcase combat vehicles in the ARPA-funded electric drive vehicle program which has the following approach:

- Assemble numerous prototype electric drive military vehicles, at Tank Automotive Command (TACOM) in Warren Michigan, to highlight the advantages of electric drive for the military (and to refute some common misconceptions) by conducting demonstrations for congressional, military, and government lab personnel
- To have a series of military vehicle platforms available for TACOM and industry to install and test alternative or emerging electric drive components
- Rigorously test the vehicles at TACOM's dynamometer facility to validate performance claims of the competing technologies.

The FMC Electric Drive M113 Testbed has been a valuable research and development platform for emerging electric vehicle propulsion technologies and control techniques. Since 1966, when the very first electric propulsion system was installed, the FMC Electric Drive M113 Testbed has been modified and upgraded numerous times. The power control electronics have evolved from a thyristor-based system in the original vehicle to a Bipolar Junction Transistor (BJT)-based system. The on-board electric power source has been batteries, and various engine-drive alternator systems using diesel, rotary, turbine, and gasoline engine type.

However, for lack of funding and other resources, the FMC Electric Drive M113 Testbed has sat idle for the two years prior to this contract. With the continued improvements in power semiconductor devices, FMC has continued to improve power conversion and control electronics to the point where the latest generation bore little resemblance to the system installed in the

M113 prior to this contract. The latest power converter designs use Insulated Gate Bipolar Transistors (IGBTs) and have many other improvements in both the physical bus structure and driver circuitry to accommodate the faster switching devices and provide more reliable operation

A similar advancement in the motor control method and electronics has occurred. The pre-contract M113 system used a six-step, DC link current regulated, slip controller. The latest generation uses field-oriented (vector) control, and motor phase current regulation. The benefits include: higher torque / amp, higher motor efficiency, and faster torque response.

The primary goal of the M113 Vehicle Refurbishment Project was to incorporate these latest advancements in electric drive technology to realize improved system performance. Other changes were made to the vehicle improve its safety and maintainability. The total contract duration, which included demonstration and testing of the vehicle was 24 months.

2.3 Statement of Work

This section provides a detailed description of the specific tasks that comprised the M113 Refurbishment Project. These tasks included specific items identified in the contract *and* subsequent modifications to the contract verbally requested by ARPA to redirect and add scope to the project.

The following statement of work is text taken directly from the SMUD contract F-379. It is followed by a listing of subsequent verbal modifications made by ARPA.

2.3.1 Original Task List from Contract F-379

Project Description:

This project entails refurbishment of the M113 Electric Drive Testbed vehicle, (developed in 1970) and refitting it with an improved power inverter and motor controller sub-components. ARPA desires to bring this vehicle up to current standards of safety and performance for use in electric and hybrid electric military vehicle development.

Specific FMC activities and deliverables:

This project includes, but is not necessarily limited to, the following activities and required deliverables:

1. Design integration and installation of an IGBT-based inverter. Inverter will be a scaled version of the inverter used in the Marine Corps Advanced Propulsion System (APS) vehicle. FMC shall accomplish all necessary assembly and testing of the refitted vehicle.
Deliverables: Installed inverter as described, in fully functional vehicle.

2. Design integration and installation of a field-oriented motor control board. Design will include protective housing for the motor control board and alternator and engine control electronics. FMC shall accomplish all necessary assembly and testing of the refitted vehicle.
Deliverables: Installed motor control board and protective housing as described, in fully functional vehicle.

3. Develop and implement Component Test Plan. FMC shall develop a component test and evaluation plan. FMC shall provide test report at appropriate times to document testing status.
Deliverable Documents: Component Test Plan, Initial Component Test Report, Quarterly Project Status Reports, and Final Reports.

4. Test Data and other technical information. FMC agrees to assure test and other data acquired is consistent with project goals. FMC agrees to provide technical information to ARPA or ARPA's designee as requested to facilitate proper use of, and maintenance and modification to the vehicle.

2.3.2 Verbal Changes to Statement of Work

The following tasks were verbally requested by Major Rick Cope, the Program Director for the ARPA Electric and Hybrid Vehicle Technology Program.

1. Battery Pack Installation (original)

"Design and install a battery pack and power distribution system to allow for "engine-off" operation. Use the GNB lead-acid batteries bought by ARPA with separate funding. Complete installation prior to shipment of vehicle to running vehicle demonstration in Atlanta, in May 1994."

2. Demonstration Support and Field Repair

"Support the M113 at various ARPA-sponsored demonstrations. This support shall include driver training, field repair of components, preparation of safety-related documents, preparation of operation and maintenance manuals, and supply of power supply for battery charging from the utility grid"

3. Battery Pack Modifications

"Modify the existing battery pack to add additional batteries to increase system voltage and high-speed performance. Complete the modifications prior to shipment of vehicle to running vehicle demonstration in Smuggler's Notch, Vermont, in September 1994."

2.4 Project Schedule

Figure 1 shows the overall project schedule for the FMC Electric Drive M113 Refurbishment project.

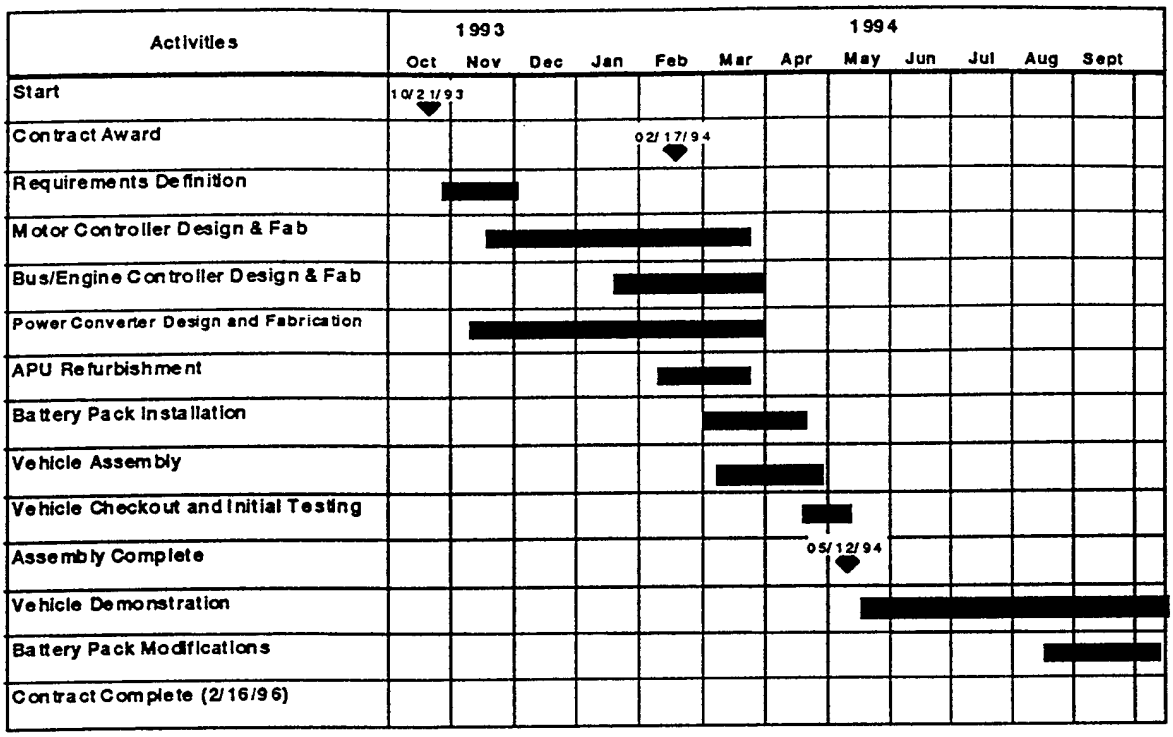

Figure 1: Schedule For The Electric Drive M113 Refurbishment Project.

2.5 Project Organization

Figure 2 shows the project team structure for the FMC Electric Drive M113 Refurbishment effort. The project was managed by Lou McTamaney of CTC; technical leadership was provided by Gordon Shafer of United Defense - Ground Systems Division.

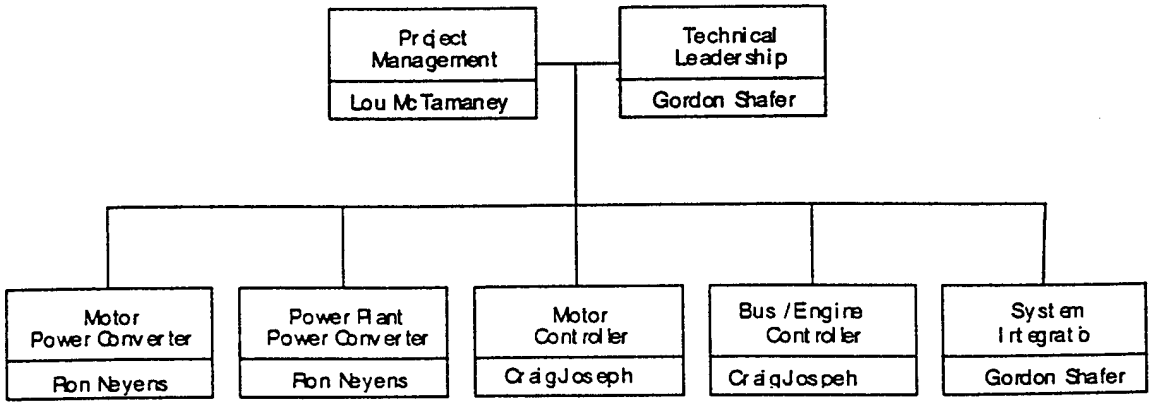

Figure 2: The Project Team Structure For The FMC Electric Drive M113 Refurbishment Effort.

Section 3. SYSTEM DESCRIPTION

3.1 M113 Personnel Carrier

The M113 is one of the most widely used combat vehicles in the world today. It is a tracked personnel carrier with an aluminum hull which is used to provide battlefield protection for 7-9 troops. Figure 3 shows a standard M113-A3 vehicle.

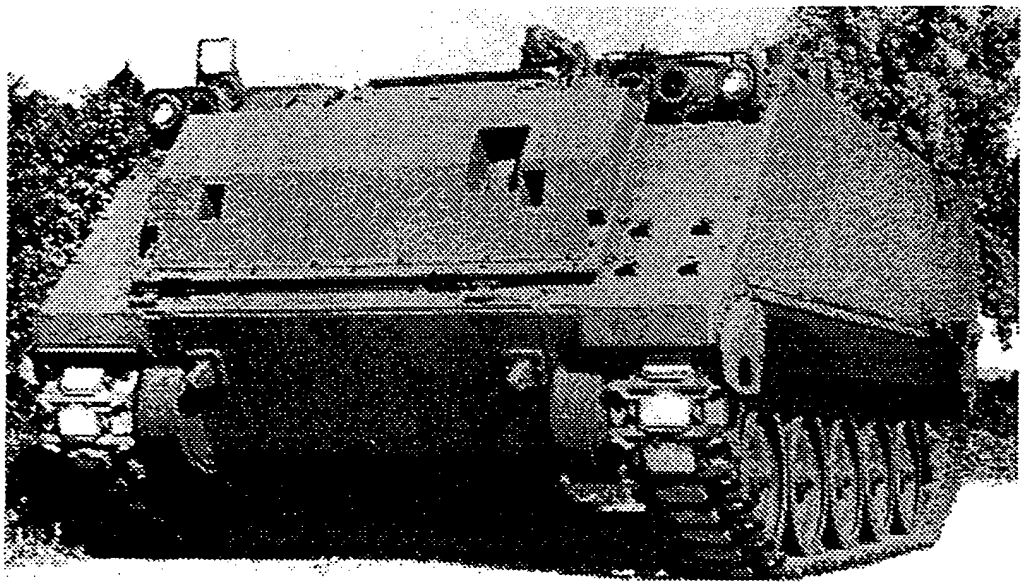

Figure 3: M113A3 Armored Personnel Carrier

3.2 Electric Propulsion System

The M113 Electric Drive Vehicle consists of an M113 vehicle with a modified propulsion system comprised of a dual-motor sprocket drive assembly, a power converter assembly, a auxiliary power unit (APU), battery packs, an energy dissipater, vehicle cooling system, power distribution and cabling, and an energy management and vehicle controller. Figure 4 shows the propulsion system power distribution architecture.

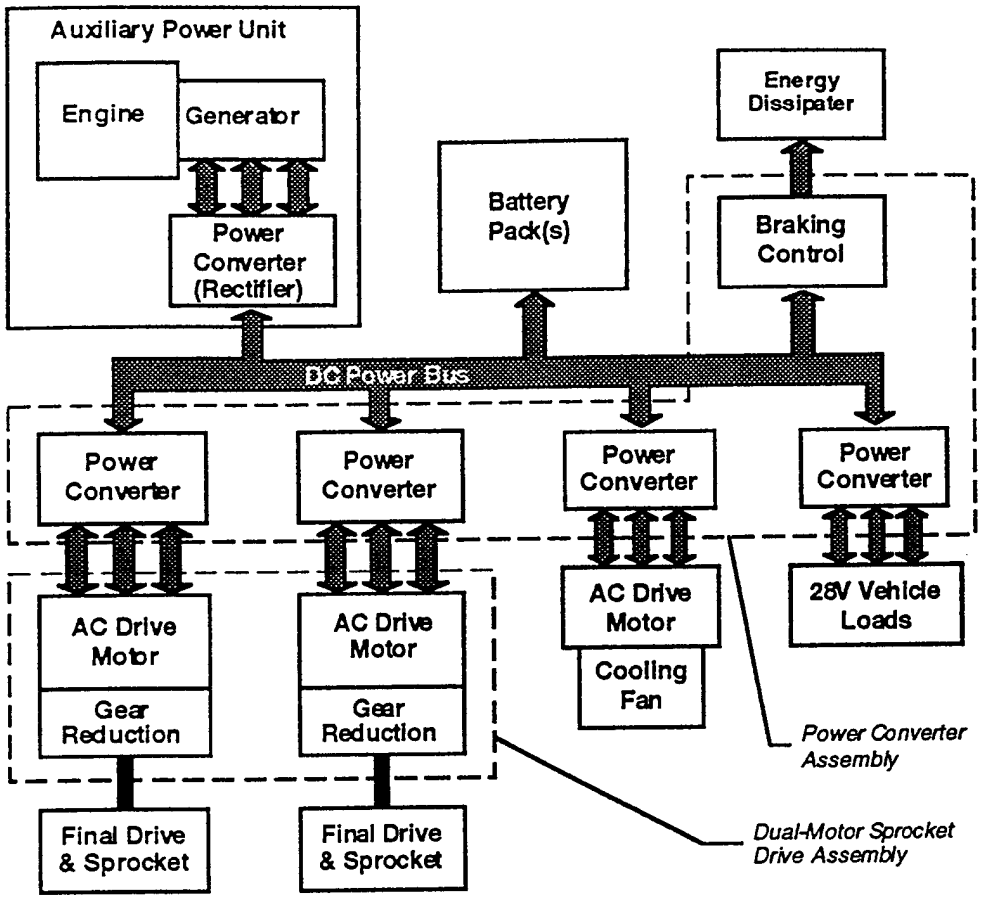

Figure 4: M113 Propulsion System Power Distribution Architecture

3.3 Drive Motor Package

Individual drive motors are used to independently provide torque to drive the left and right sprockets. Each drive motor is a high-speed AC induction machine comprised of a stator assembly within a housing and a rotor assembly on a shaft. The two stator housings mate to a common center housing on the non-drive ends, and to planetary gearboxes at the drive-end. The rotor shaft is supported by bearings that are part of the center housing and gearbox, respectively.

The output from the gearboxes connect to the vehicle's final drives (a second gear reduction set) and powers the sprockets, thus providing the speed and torque necessary to steer, brake and accelerate the vehicle.

Figure 4 is a block diagram showing the major interfaces to the drive motor package.

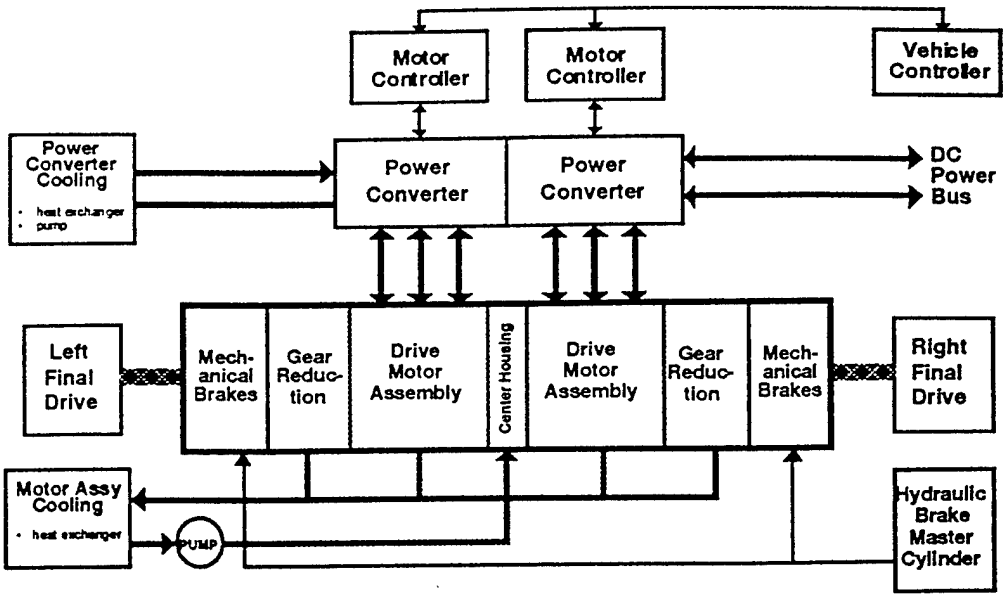

Figure 4 Interfaces to the Drive Motor Package

The drive motors were built for FMC by Allied-Signal AirResearch in 1966 and have proven to be reliable, high-performance machines. Other than the addition of a protective cover, no modifications were made to the drive motor package for this effort.

The motors have a three-phase, four-pole stator winding with 72 slots. Both ends of each phase are terminated at the motor housing, allowing either delta or wye connections. For the present application, the motors are connected delta.

The squirrel cage rotors are cast construction in which the 54 rotor bars and end rings are formed from aluminum cast through a stack of steel rotor laminations. This sub-assembly is shrunk-fit on a hollow shaft to form the complete rotor assembly.

The motors are cooled and lubricated with a low viscosity turbine oil. The stator is cooled by spiral passages in a stator jacket and oil exiting this jacket at both ends of the motor is sprayed on the windings end turns. The rotor is cooled by longitudinal passages between the laminations and the shaft. Rotor cooling oil is delivered to these passages from the inside diameter of the shaft.

Each motor is connected to an integral 5.28:1 planetary gearbox. Mechanical disk brakes are provided for parking and emergency backup braking. The brake calipers are mounted on each end of the motor drive package and a disk is mounted to the output drive yoke. A center housing which joins the two motor assemblies also provides oil passages to the rotors.

The following table (Figure 5) lists key performance characteristics of the drive motor package.

Rated Speed	14,600	RPM
Maximum Over-speed	17,000	RPM
Maximum Torque (at motor output)	322	ft-lb.
Maximum Torque (at gearbox output)	1,700	ft-lb.
Continuous Rated Current	250	amps
Rated Voltage	400	Vrms / phase
Volts per Hz	1.87	V

Figure 5: M113 Drive Motor Characteristics

3.4 Auxiliary Power Generation Unit

The electric power for the M113 vehicle is generated by a 500 hp Auxiliary Power Unit (APU) consisting of a engine-driven wound-field generator. The APU generates controlled three phase AC power which is rectified in the power converter to provide a DC power source for the traction inverters and fan inverter.

Figures 6-7 Show the major components of the APU.

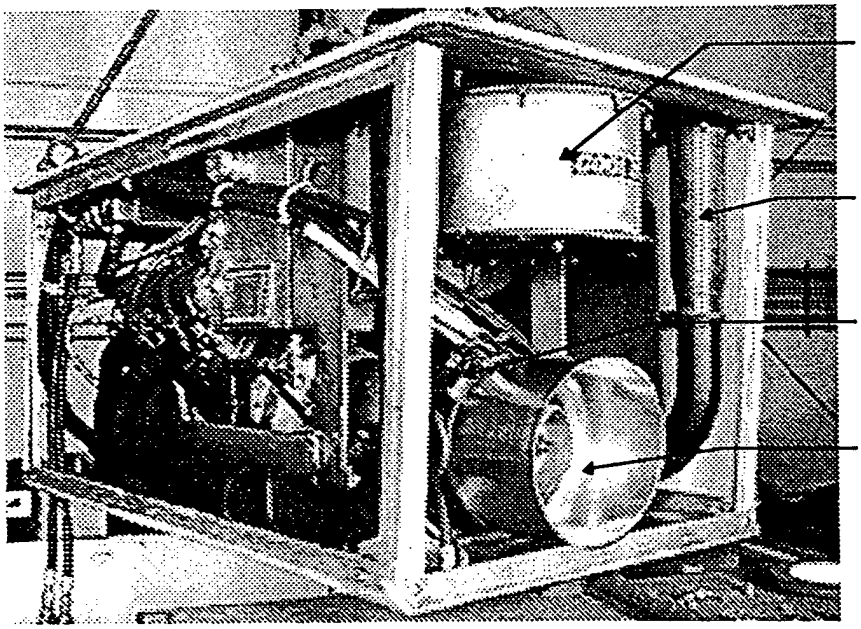

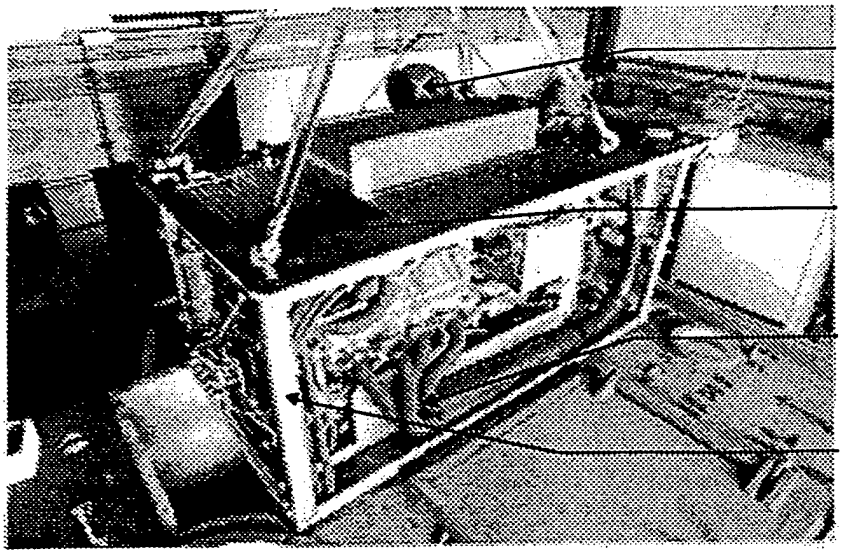

Figures 6-7: APU Is Easily Removed From The Vehicle For Servicing (side covers removed for clarity)

The engine is a gasoline-fuel, 560 cubic, V8 with port fuel injection and a dry sump lubrication system for slope operation. The actual output power has been limited to 375 HP by electronically limiting the maximum engine speed to 4000 RPM. This has been done to increase engine reliability and life.

The generator, which is built by Westinghouse, is a three-phase, six-pole, air-cooled machine rated at 312 kVA and is connected to the engine flywheel with a quill shaft. Originally, the generator was designed operate as a 400 Hz generator to be self excited and operated over a narrow speed range. To obtain operation over a broader speed range, FMC has modified the generator to provide external excitation. This was accomplished with the addition of slip rings and drive circuitry. The generator generates 100 volts DC per 1000 rpm at full excitation. The rated output current is 375 amps per phase.

The auxiliary power unit is cooled with an electric cooling fan. The fan draws air through the radiator to cool engine coolant, electric motor oil and power electronics coolant. The fan is driven by a three phase induction motor and its speed is modulated to control both coolant temperature and engine compartment temperature. An oil-to-water heat exchanger is used to cool engine oil. Airflow through the heat exchangers creates a negative engine compartment pressure with respect to ambient pressure. This pressure differential is used to draw air through the generator in order to provide cooling. An manifold connect one end of the generator to the crew compartment. The other end is open to the lower pressure engine compartment volume.

Engine speed is controlled by a small servo motor which opens and closes four large throttle butterflies at the intake manifold. The servo motor is driven by the vehicle control card.

3.5 Power Converter Assembly

3.5.1 Power Converter Arrangement and Topology

The power converter assembly contains the power and control electronics for the electric propulsion system. The power converter contains the rectifier section that converts the 3-phase AC power from the generator to DC for distribution. DC power distribution is the simplest and most effective configuration because it provides an easy-to-manage single connection for all power sources and users. DC power is converted to AC at the optimal frequency and voltage to drive the motors, resulting in high efficiencies throughout the speed range.

The power converter assembly includes the Insulated Gate Bipolar Transistor (IGBT) power modules, capacitors, bus structure, current sensors, coldplate, control electronics, gate drive and fault detection circuitry for each switch, and internal wiring for the traction drive motors, generator, energy dissipater, and electrically-driven cooling fan. All the high power electronics are mounted to a common coldplate, which functions as a temperature controlled mounting surface. Each inverter section is a three phase, variable frequency, current-regulated, pulse-width-modulated unit (CRPWM). The control and gate drive electronics are located on circuit cards within the power converter assembly.

A schematic diagram for the assembly *(pictured in Figure 8)* shows the connections within the assembly and the interfaces to the vehicle propulsion components.

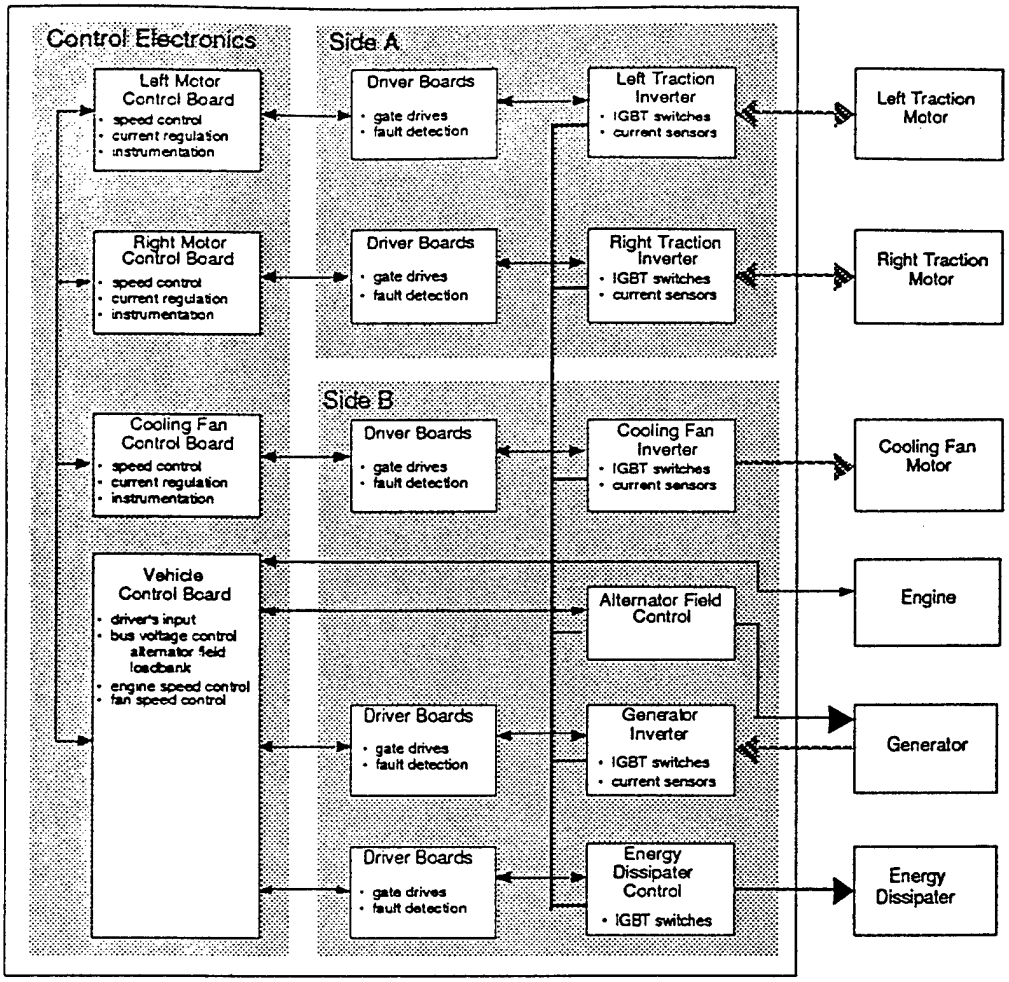

Figure 8: M113 Power Converter Architecture and Interfaces

There are two three-phase traction bridge circuits that provide up to 900 amps rms. line current per each motor. Two paralleled IGBT's per leg of the bridge are used to supply the current. The two traction drive IGBT's are arranged on one side (side A) of the cold plate and are connected to form two three phase inverters.

The gate drive circuitry is an important element of the inverter circuit. It is used to interface the logic level output of the motor controller to the gates of the power devices. A properly design gate drive circuit should include:

- High dV/dt capability (5V/nsec) and low transport delays (<1.5 usec) to support fast switching times.
- Floating supplies unaffected by high dV/dt
- Appropriate gate resistors and filter capacitors for high frequency noise immunity.
- Immunity from capacitively and magnetically coupled noise (input and output wiring isolated, twisted pair outputs to IGBT)

- Over-current protection.

The FMC gate drive circuit uses de-saturation detection to prevent short circuit currents from destroying the IGBTs and is opto-coupled to the motor controller circuitry for capacitively and magnetically coupled noise immunity.

For each leg of the inverter, a single dual driver card which mounts directly to four IGBT's is used. One-half of this card drives a pair of upper switches while the other half of the card drives a pair of lower switches.

The IGBT gates are driven from a common hybrid Integrated Circuit (IC) driver through separate gate drive resistors. To turn the IGBT's on and off, their gates are switched to +15 volts, and to -10 volts, respectively. Each driver circuit has an isolated power supply that provides the required +15 and -10 volts for the hybrid IC driver.

The IC driver is switched on by passing current through an internal optical coupler. This control current is supplied by the motor control card (discussed below) through a differential line driver.

Short circuit protection is provided by a de-saturation circuit., that detects a high collector-to-emitter voltage when the IGBT is on and turns it off at a controlled rate to prevent damage to the switch. If a de-saturation fault is detected, a fault signal is sent to the motor control card from an opto-coupler. The controller then disables the output drive to prevent damage to the system.

The topology of the traction inverter and gate drive circuit is shown in figure 9.

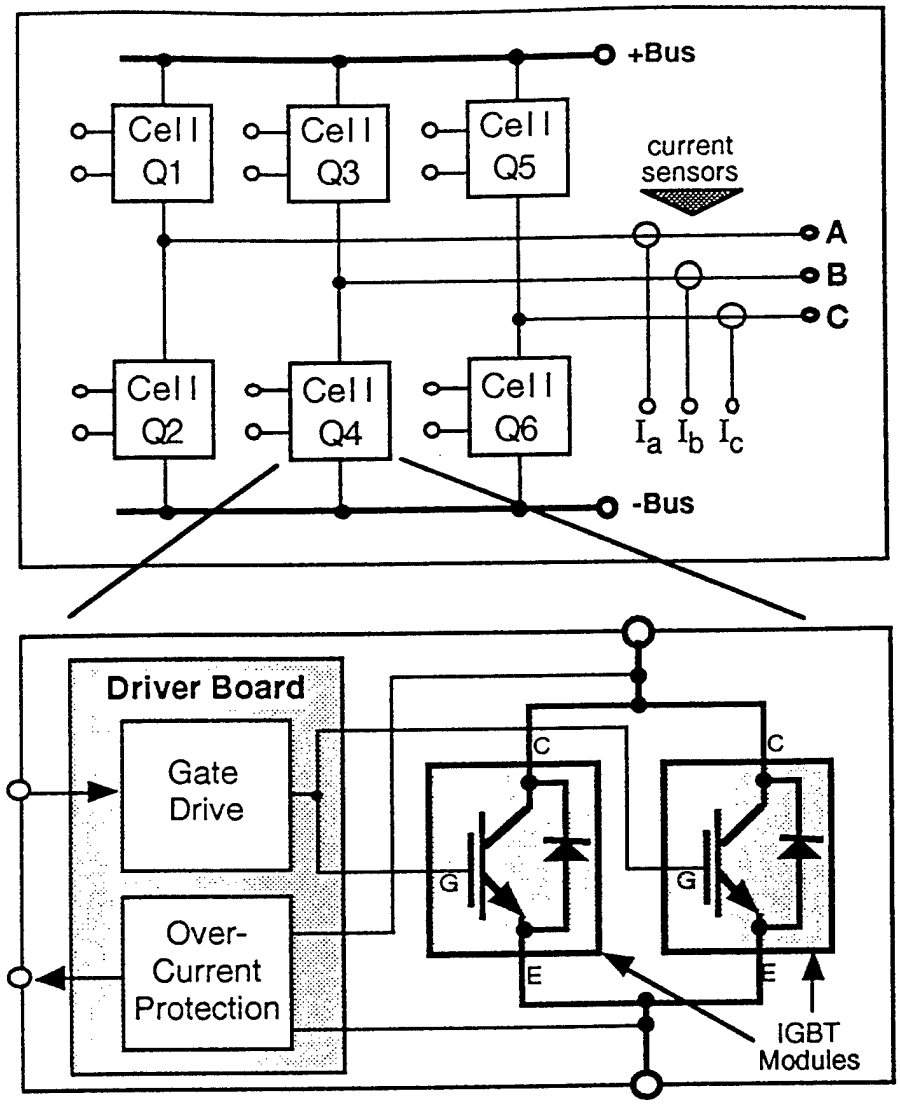

Figure 9: Topology Of Traction Motor Inverter and Drive Circuitry

The generator inverter, braking circuit, and fan inverter are located on the opposite side of the cold plate (side B). The generator inverter is used to convert the AC output of the wound field generator into DC power for distribution. To achieve this, an inverter identical to the traction motor inverter is used. The alternator output is rectified by the integral flyback diodes in the IGBT modules and each IGBT gate is biased at -10 volts to hold it off. As such, only the diodes are used to rectify the AC output of the generator. For future applications, the bridge can be used with an induction motor to generate power for the DC bus. It can also be used to drive the engine for compression braking and engine starting.

The energy dissipater is used to convert excess energy from the power bus to heat and then reject it to ambient. The energy recovered from downhill operation and / or from reducing the velocity of the vehicle must be absorbed or dissipated. During panic stops, or during extended downhill operation, or

in the event of a failure of the energy storage system, the regenerated energy will exceed that which can be consumed by the other bus power demands.

The dissipater uses resistive elements connected electrically between the plus and minus potentials of the power bus and is physically mounted in a coolant tank in the forward right corner of the vehicle. Under regulation of the vehicle controller (discussed below), the dissipater serves as a bus voltage circuit protector to prevent the occurrence of a bus over-voltage condition. In the absence of the dissipater, the bus voltage would rise to unacceptable levels and/or the amount of regeneration (hence retardation of the vehicle) would have to be reduced or eliminated.

The M113 braking energy dissipater circuit uses six IGBT modules. Four IGBT's are used as upper switches and two as flyback diodes. The braking circuit connects the DC bus to a 0.3 ohm braking resistor when the bus voltage rises above the DC bus voltage setpoint plus an adjustable deadband voltage.

The cooling fan inverter uses six single IGBT modules and a hex driver card. The hex driver card contains six gate drive circuits and mounts directly to the six IGBT's. The fan circuit can provide up to 450 line amps rms., which is greatly in excess of the current requirements of the cooling fan motor. This over-capacity, is a result of the fact that the cooling fan inverter uses the identical IGBT modules as the traction motor, generator and energy dissipater circuits. which provided a high degree of commonality and simplified the bus structure design.

With the fast switching (high di/dt) of the IGBT, it is important to minimize stray inductance. Voltage spikes created during turn-off are a potential source of device failure. The FMC power converter used developed for the M113 uses a laminated bus structure that minimizes inductance through flux canceling. The bus structure and key power converter components are shown in figures 10 and 11 below.

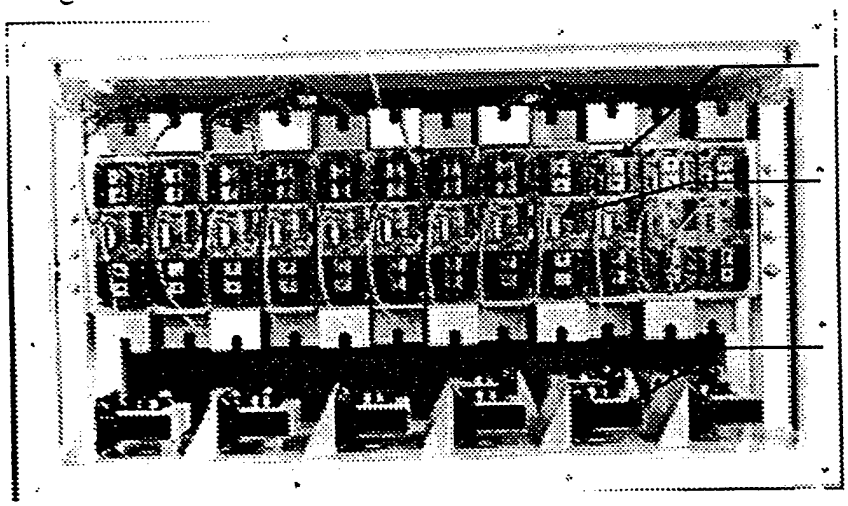

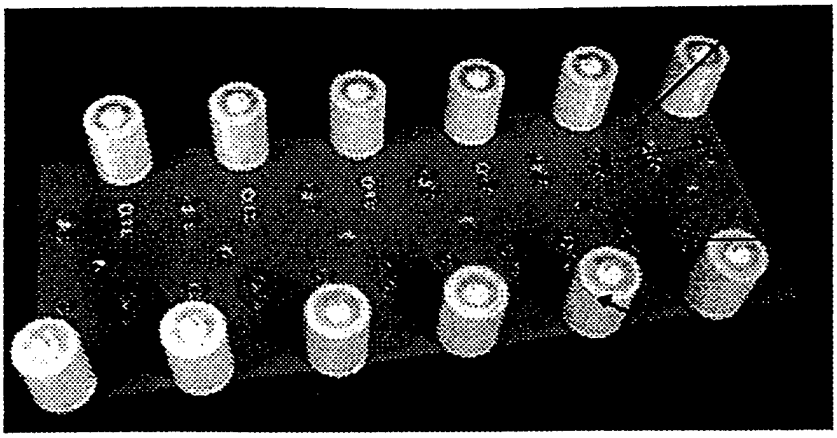

Figures 10-11: Physical Layout of Bus Structure and Inverter Components

3.5.3 Induction Motor Control Boards

The induction motor control board along with the power converters provide regulation of the frequency, amplitude, and harmonic content of the current waveforms in the motors (and generator) by active control of the IGBT's in the inverter.

A block diagram of the motor control and inverter topology in shown in Figure 12.

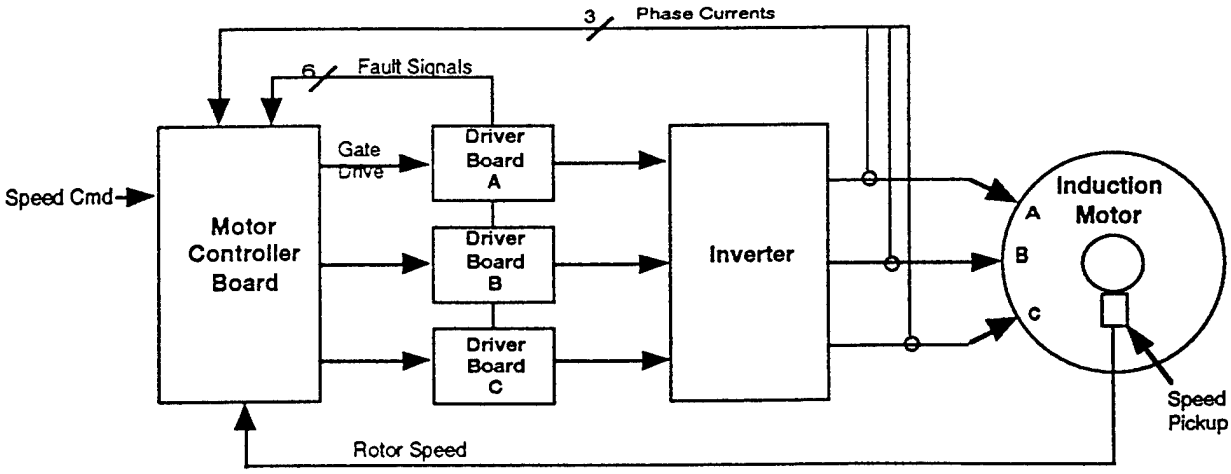

Figure 12 Induction Motor Control Topology

The induction motor card implements a field oriented control (vector control) method. The benefits include:

- High starting torque, limited only by inverter current rating

- High motor efficiency because the magnetization current can be controlled as a function of motor speed. This reduces losses at medium to high motor speeds.
- Smooth control of motoring torque for both motoring, regeneration, and zero speed.
- An increase in the speed/torque envelope due to field weakening schemes.
- Excellent velocity control under varying load conditions.

Three variables contribute to the torque output of induction motors: stator current, slip frequency, and flux. Field oriented control of induction motors provides independent control of two of these components, namely, current and slip. The FMC induction motor controller uses a dedicated vector processor that calculates the optimal slip and the torque and flux producing stator current components. The vector processor performs the synchronous-to-stator transformation and produces the three phase sinusoidal stator reference currents.

There are three motor control cards in the power converter assembly. Two are used to control the left and right traction motors, respectively, and one is used to control the cooling fan motor. Space for a fourth motor control card - used to control an induction generator - was designed into the assembly.

A block diagram of the motor control card is shown in Figure 13.

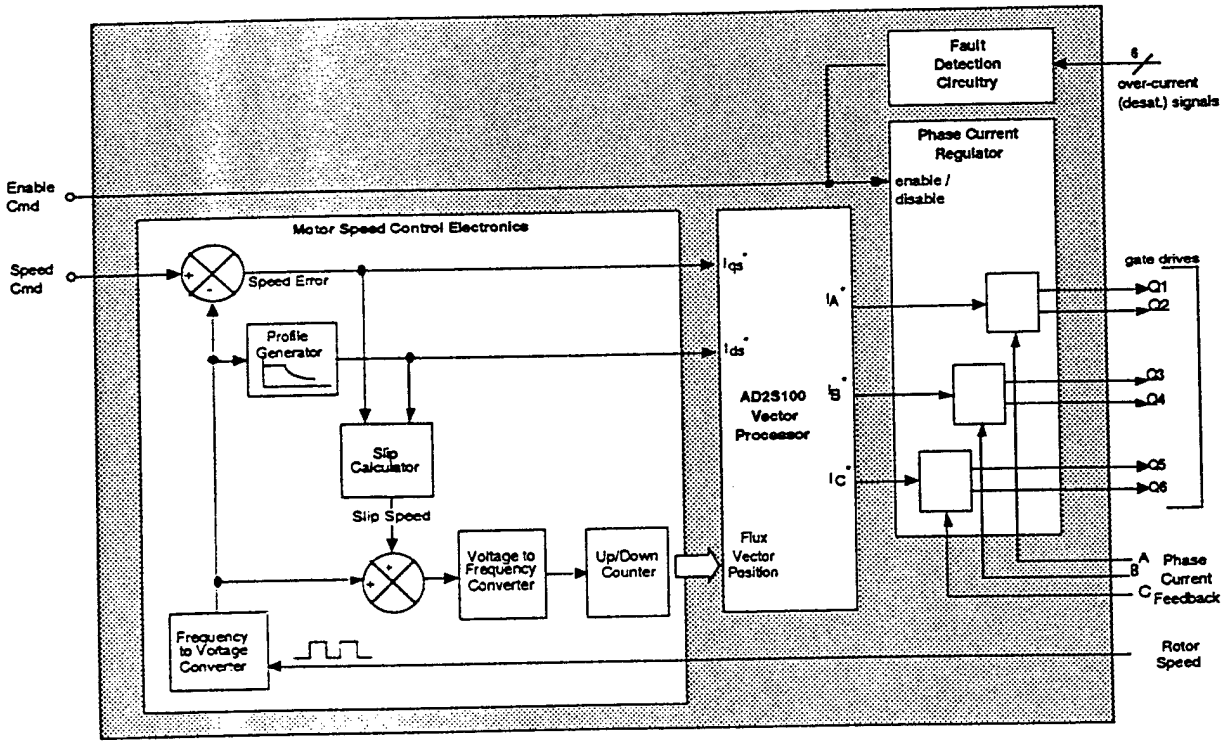

Figure 13 The FMC induction motor card implements a field oriented control (vector control) method.

Each card receives a velocity command from the vehicle control card and controls the motor speed to match the commanded speed. The current and slip is controlled at each motor to produce the torque required to close the velocity loop.

Each motor has a Hall-Effect-type velocity pickup that senses motor speed and direction. The velocity signal is conditioned on the motor control board and compared to a commanded motor speed to produce a signal proportional to the speed error.

The field-orientation (vector) control method provides independent control of both the magnetizing flux-producing (Iqs), and torque-producing (Iqs) components of stator current. Ids controls the air gap flux and the motor volts per Hz. It is held constant up to a certain speed then it is reduced as a function of 1/speed to provide field weakening. Iqs is varied linearly as a function of speed error. The current components are added as two 90 degree vectors by the Vector Processor. The Vector Processor generates three phase reference currents, with each current's amplitude proportional to the amplitude of the vector sum. These are Ia, Ib, and Ic. The current regulator compares the actual current to the commanded current and will switch the upper switch "on" if the current is too low or switch the lower switch "on" if the current is too high. The closed loop current control produces smooth sinusoidal output currents for the motors.

In an induction motor. motor torque is regulated by modulating the frequency of the motor current waveform above and below the synchronous speed of the motor. The difference between the speed of the motor current waveforms and the motor speed is called slip. Positive slip (applied frequency greater than motor speed) produces motoring torque. Negative slip (applied frequency less than motor speed) produces regenerative (braking) torque. To maximize motor efficiency and increase the speed range of the motor, slip is increased linearly as a function of speed error up to the speed where field weakening begins; it is then increased as a function of speed error times 1/Ids.

The motor control cards contains circuitry to shut-off the output drive when a fault occurs. The motor control cards receive de-saturation fault signals from the driver cards. They shut off the drive for their respective inverter. The fault signal is sent to the vehicle control card and all the bridges are then disabled to prevent erratic steering.

3.5.4 Vehicle Control Board

The vehicle control card provides the system-level control of the electric propulsion system. It is a single circuit board located within the power converter assembly (see figure 14) that provides the following functions:

- Driver's Control Input and Interpretation
- Bus Voltage Regulation
- Engine Speed Control
- Cooling Fan Speed Control
- Power Converter Fault Management

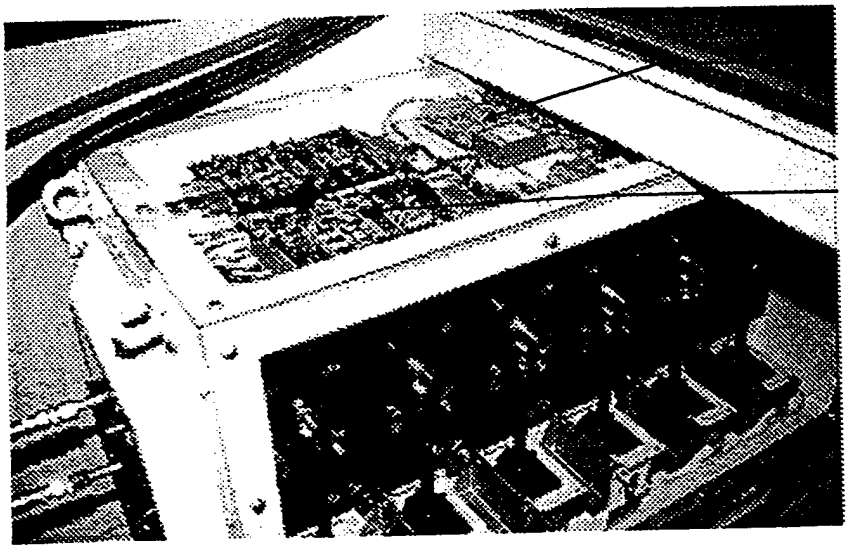

Figure 14 The vehicle control card is located within the power converter assembly

Driver's Controls Input and Interpretation:

The vehicle control card receives commands from the driver's station controls (accelerator, steer, brake) and the vehicle speed feedback from the motor control cards. Based on the difference between the command and actual speeds for each motor (speed error), it then generates left and right track torque commands. The torque commands are sent to the left and right track motor control cards. Precise control of the vehicle is maintained with closed loop control of each track motor.

The speed error commands are also used to determine the engine speed setpoint.

Bus Voltage Regulation:

The vehicle can be operated in the battery-only mode or engine-only mode. When the vehicle is operated in the engine-only mode, bus voltage is controlled as a function of engine speed. The bus voltage is varied from 150 to 350 VDC as the engine speed is varied from 2000 to 4500 rpm. This is required because the generator's ability to output voltage is dependent on its rotational speed. At low generator speeds the output voltage command is reduced to avoid overdriving the field control circuit.

Bus voltage is controlled by modulating the voltage pulse width applied to the alternator field. The control card compares the reference voltage with the feedback voltage and increases the pulse width to the alternator field if the feedback voltage is low.

When the battery mode is selected, the alternator isn't used and the bus voltage is the battery pack voltage.

At present, the APU and battery pack cannot be providing power simultaneously (hybrid operation) to the vehicle propulsion system.

The energy dissipater circuit is energized when the bus voltage exceeds 400 volts DC. The voltage pulse width applied to the braking resistor is increased linearly from 0 to 100% as the bus voltage rises from 400 to 420 volts DC. This may happen during rapid braking if the batteries are unable to absorb the braking energy. If the battery pack circuit breaker or series contactor open while the vehicle is traveling, the braking circuit controls the DC bus voltage. If the bus voltage rises above 450 volts DC, all the motor control cards are disabled and only the braking circuit is enabled.

Engine Speed Control

Engine speed is varied from 2000 to 4500 rpm depending on the difference between desired vehicle speed and actual vehicle speed. When there's a large positive speed error, engine speed is increased to 4500 rpm. When the error is small or negative during braking, engine speed is reduced to 2000 rpm. These limits are adjustable with potentiometers on the control card.

Cooling Fan Speed Control

The vehicle control card modulates cooling fan speed to regulate engine coolant temperature. A thermocouple is used to sense coolant temperature. This low-level signal is fed to a thermocouple amplifier on the card which conditions the signal. A second amplifier outputs the desired fan speed for the fan motor card.

Power Converter Fault Management

Faults from the motor control cards and de-saturation signals from the gate drive cards are fed to the vehicle control card and displayed. The fault signal are latched, i.e. if a fault occurred they will display the fault status until manually reset, even if the fault condition is no longer present. If any fault occurs, a fault signal is also displayed on the drivers control panel.

The control enable switch on the panel enables the motor control cards, the alternator field, and the engine servo circuits. The control enable switch is also used to reset the faults.

3.5.5 Power Converter Cooling System

To maintain reliable operation, the junction temperature IGBT's within the power converters must be kept below safe operating limits. For highest power density, the power converter assembly must be liquid cooled to maintain the required maximum IGBT module baseplate temperature. The M113 power converter assembly uses a internally finned coldplate to transfer heat from the device mounting surface to the cooling fluid.

The coldplate consists of a pair of machined aluminum plates with interlocking cooling fins forming channels in which coolant flows. A single coldplate is shown in Figure 15.

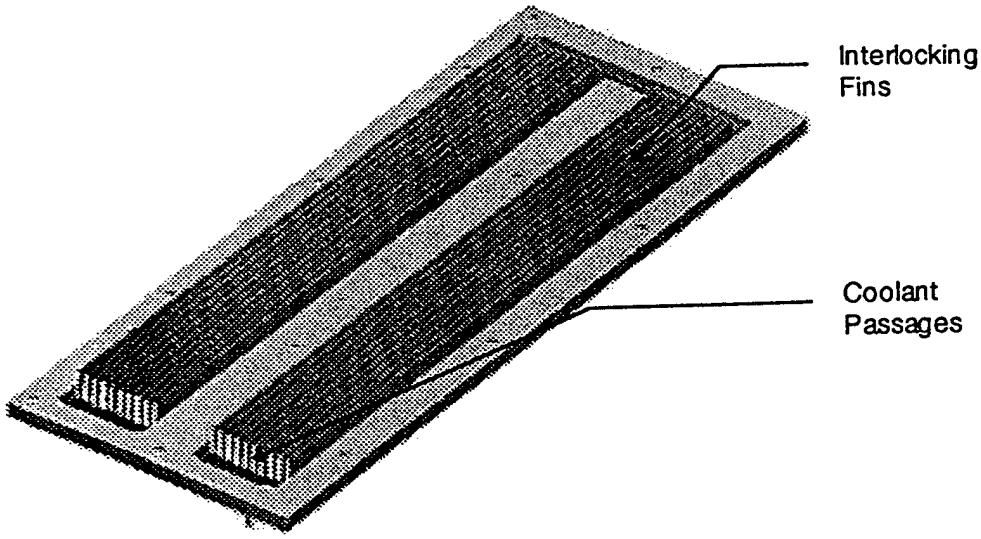

Figure 15: M113 Power Converter Coldplate

The coolant (water-ethylene-glycol) is pumped through the coldplate at a rate of five gallons per minute. The temperature of the coolant entering the coldplate is 160 °F. A heat exchanger in the APU compartment is used to reduce the coolant temperature.

To removed heat generated in the bus structure four cooling fans are installed on the power converter enclosure. These fan are four inch diameter, 12 volt, and produces 85 CFM of airflow. The air flow is directed across the IGBT's and the bus structures and then exits the opposite side through ventilation holes.

Figure 16 shows the power converter installed in the M113 vehicle and identifies the location of the four cooling fans.

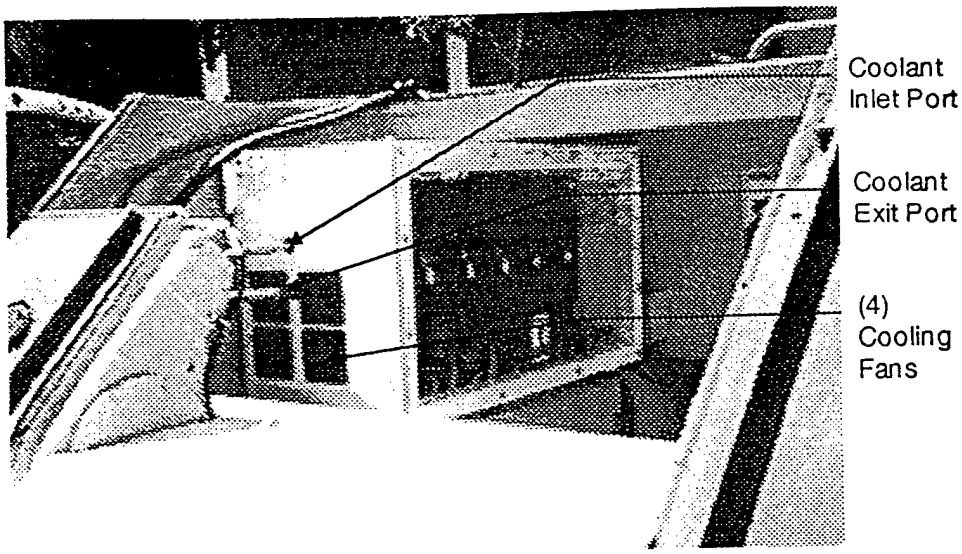

Figure 16: Cooling Fan location and Coldplate Coolant Connections

3.5.6 Power Converter Enclosure and Mounting Structure

The power converter enclosure *(see Figure 17)* is fabricated from aluminum sheet and extruded shapes. The enclosure was mounted to the M113 hull with shock mounts to reduce the vibration level seen by the components within the enclosure. All of the panels on the enclosure are removable for servicing. When installed in the M113, the aluminum front and top closure panels were replaced by clear plastic panels for viewing.

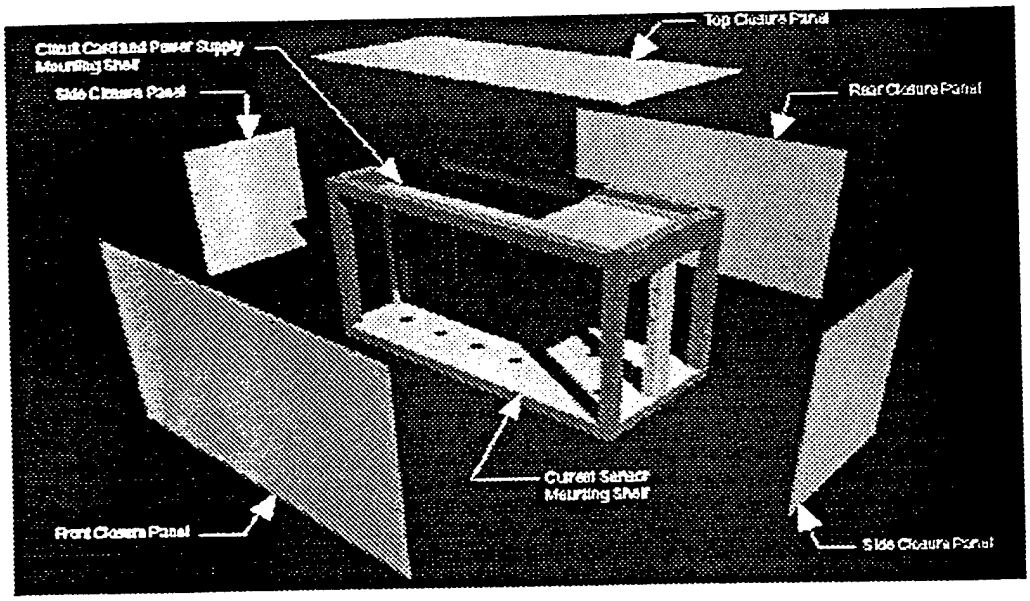

Figure 17: M113 Power Converter Enclosure

3.6 Battery Installation

To allow stealth operation of the M113 and to investigate the utility of battery-only operation, an energy storage system consisting of 90 lead-acid batteries was installed into the M113. The batteries supply power to the vehicle for acceleration, slope operation, and steering.

The installation of the batteries was completed in two separate tasks. The first task installed created a 240 VDC battery pack consisting of 60 batteries, a monitoring system, and a charging system. The second task created a 360 VDC battery pack with an addition of more 30 batteries in the vehicle and integrated them into the vehicle power distribution system.

All the batteries for both groups are of the high density sealed lead-acid type.

3.6.1 240 VDC Battery Pack

The first installation divided the 60 batteries groups of four and configured as five vertical columns and three levels. The batteries were placed on the left sponson of the vehicle and mounted on slides for easy access and maintenance (see Figure 18). The batteries are enclosed within an aluminum compartment with internal ventilation.

The 60 total batteries were divided into two parallel strings of thirty batteries in series. This type of arrangement provided 240 volts and 207 amp/hour continuous power to the power converter.

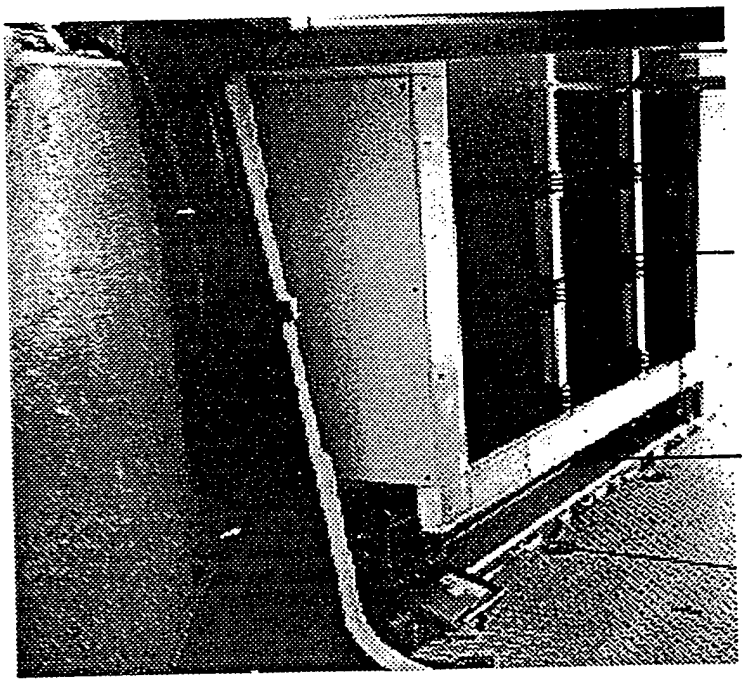

Figure 18: Battery Compartment for 60 Lead-Acid Batteries

3.6.2 360 VDC Battery Pack

The second installation placed 30 batteries on the floor of the vehicle (see Figure 19) between the first battery pack and the APU. The floor mounted batteries were mounted in similar groups of four but without the sliding mechanism. This group of batteries is accessed by removing an insulated aluminum cover.

The 90 total batteries were divided into three parallel strings of thirty batteries in series. This type of arrangement provided 360 volts and 207 amp/hour continuous power to the power converter.

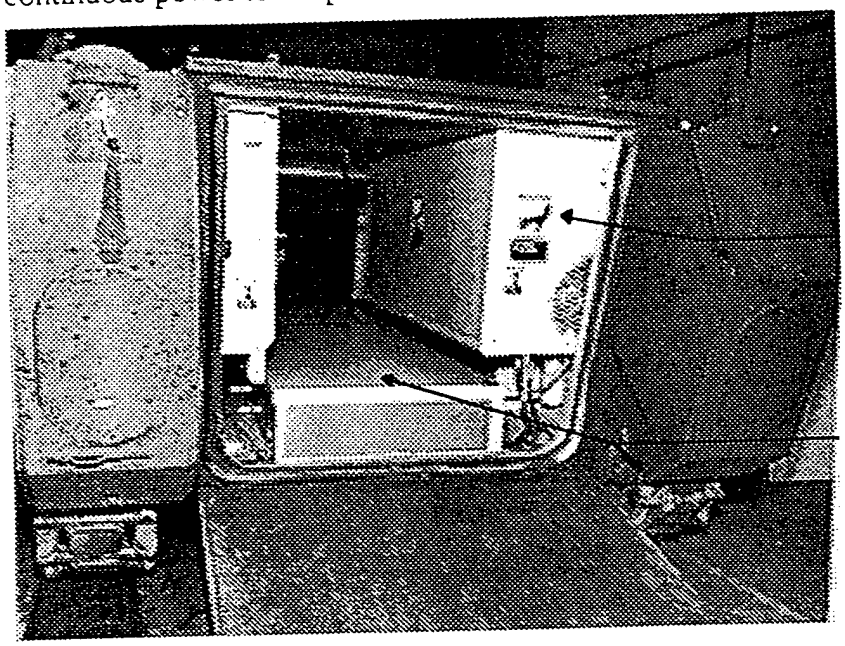

Figure 19: Battery Compartment for 30 Additional Lead-Acid Batteries

3.7 Vehicle Power Distribution

The power distribution diagram is shown in Figure 20. During startup, the capacitors in the power electronic assembly are charged through a 50 ohm resistor. Once changed, the DC contactor then connects the battery pack to the power electronics assembly. This prevents in-rush current from damaging the contactor and circuit breaker contacts. It also prevents the breaker from tripping on closure. On shutdown, the contactor is opened and the DC bus discharged by stepping on the brake and the accelerator. The stored energy in the capacitors is discharged through the motor windings.

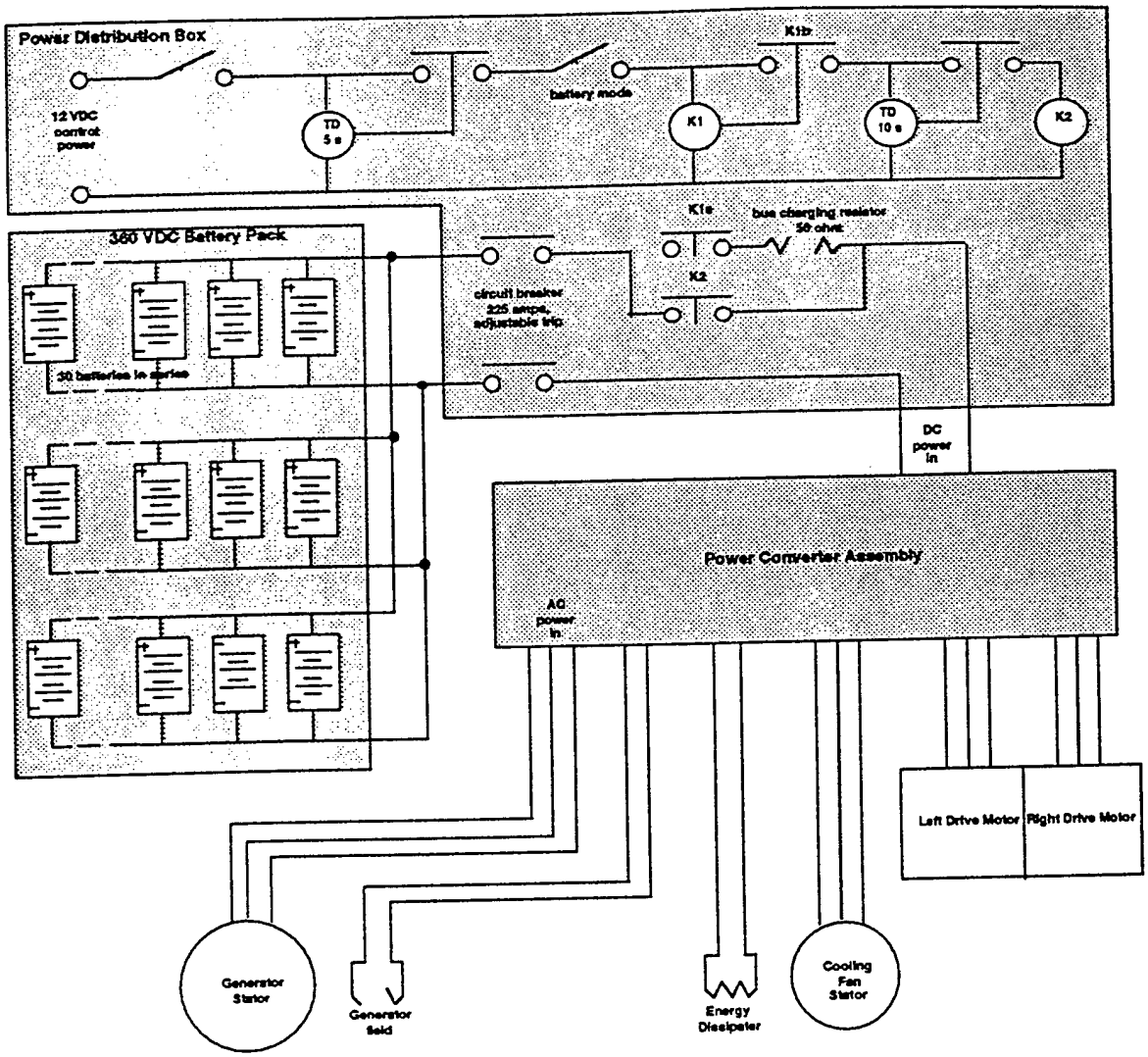

Figure 20: Electric Drive M113 Electrical Power Distribution Diagram

The alternator three phase stator outputs are connected directly to the power electronics assembly without contactors or breakers. The alternator field is excited by the power electronics from the DC bus. During startup, the field is excited by a DC to DC converter powered by the 12 volt accessory batteries.

The drive motors are connected directly to the power electronics assembly with short cables that are routed in a protective manner to prevent exposure to the crew and to prevent damage by pinching or crushing.

Vehicle control cabling from the driver's area is routed in an overhead channel away from the motor wiring to minimize noise on signal circuits.

3.8 Driver's Station

The driver's controls in the electric drive M113 provide the steering, acceleration, and braking input to propulsion system. The driver's controls are shown in Figure 21.

The gunner's control handle installed in the refurbished M113 Electric Drive Vehicle is used to provide steering input. This unit is identical to the gunner's control handle used in the standard Bradley Fighting Vehicle (BFV).

An accelerator pedal is used to control forward vehicle speed and acceleration.

Most of the braking is controlled by backing off on the accelerator pedal. Additional braking effort is provided by a brake pedal which rotates a potentiometer. Mechanical braking is provided by the same pedal. At half pedal travel, the linkage engages a two stage master cylinder and calipers on the motor drive package engage the disk brakes. The mechanical brakes are not required for normal operation. Typically, they are required only if an electrical fault occurs while driving.

A brake lock lever is provided to hold the vehicle still on slopes and during vehicle transit. The brake lock is engaged by stepping on the brake pedal firmly and pulling backwards on the brake lock lever. The brake lock is disengaged by pushing forward on the brake lock lever.

The driver's instrument panel contains the switches and gages needed to operate and monitor the engine and the electric propulsion system.

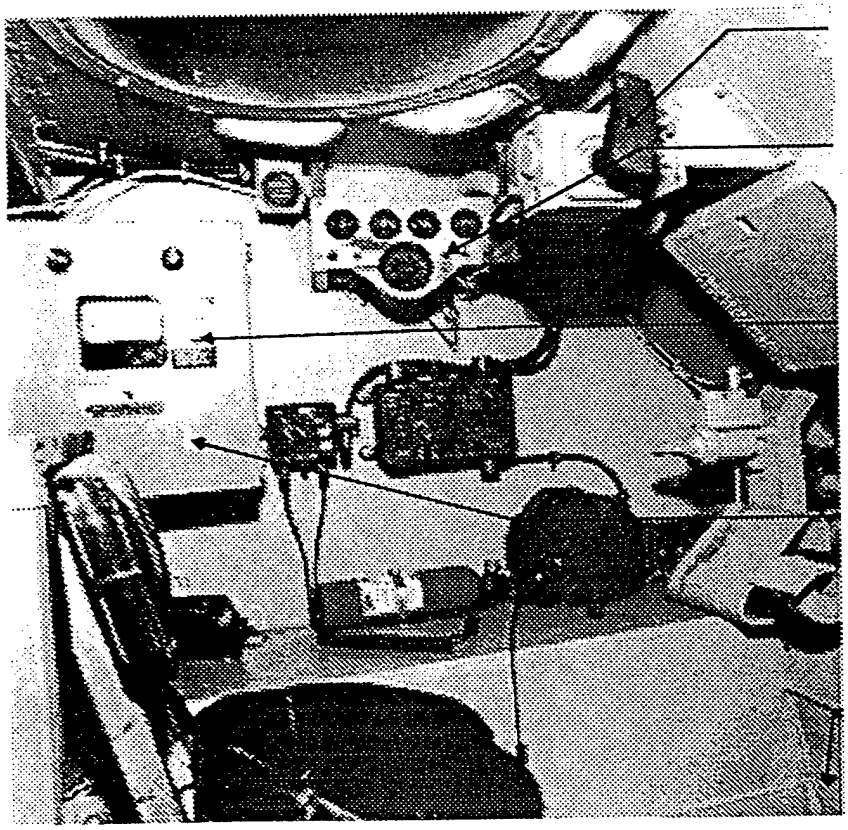

Figure 21: Driver's Station Layout

The push button start switch energizes the engine starter. The run switch turns on the electric fuel pumps, the fuel injection system, and the ignition system. To start the engine, the run switch is turned on then the starter button is depressed until the engine starts. Each time the run switch is turned on the fuel injection system squirts each cylinder with fuel. When the engine is cold the switch should be toggled several times before starting. Once the engine is started, the main power must be turned on to activate the power electronics coolant pump and the traction motor's lubrication and coolant pump. These pumps are powered by the 12 volt accessory batteries.

The forward reverse switch selects the vehicle direction.

The track enable switch enables the track motor control cards and the cooling fan. When this switch is on and there is voltage on the DC bus, the vehicle will respond to the drivers controls. The field switch turns on the DC bus and the voltage level is indicated on the bus voltage gage. Bus current is sensed in the battery mode only by sensing current in the negative battery pack lead. It is difficult to sense the alternator rectified output because it is distributed in the laminated bus structure. However the alternator line currents can be measured and the DC bus current could be calculated. Current sensors are already installed.

3.9 Vehicle Cooling System

The vehicle cooling system consists of an electrically-driven fan and three separate heat exchangers configured in parallel to each other. One circuit is for the low temperature coolant which is used to cool the power converter assembly. A second circuit is for the "high" temperature coolant used to cool the auxiliary power unit. A third circuit is for the oil used to cool the drive motors. The alternator, which is directly driven from the engine, is air-cooled. The overall cooling system of the vehicle is shown in Figure 22.

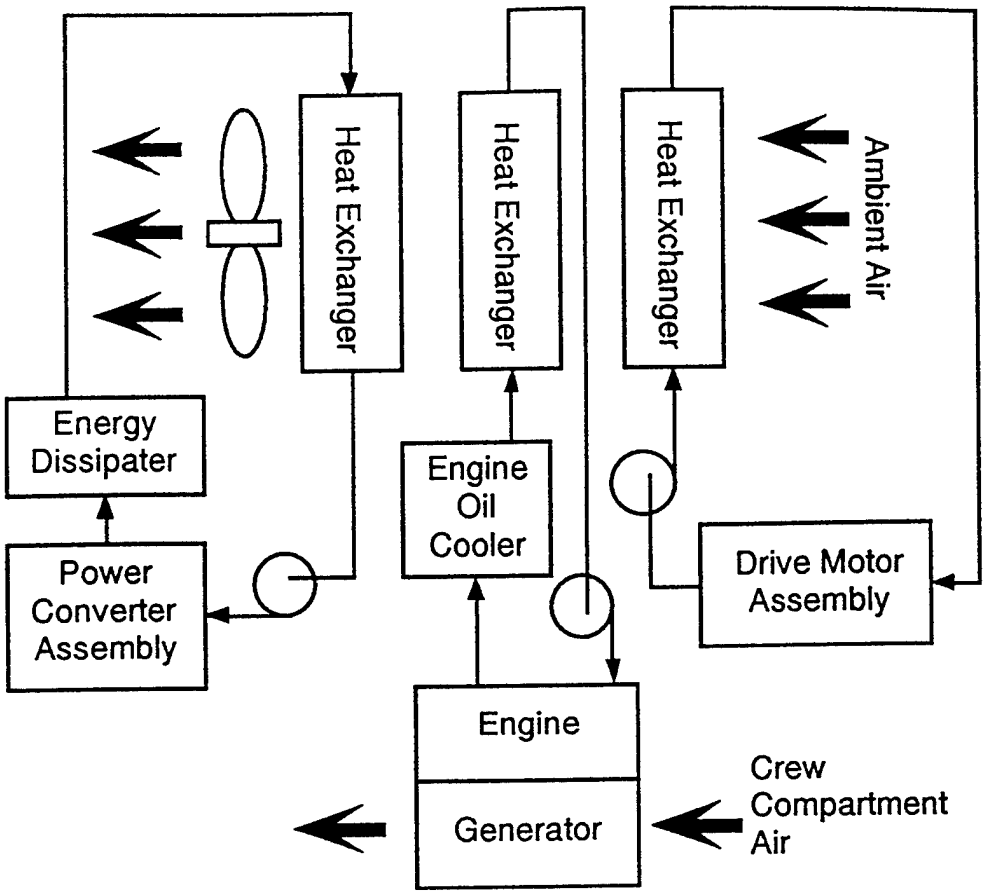

Figure 22: Electric Drive M113 Vehicle Cooling Schematic

The cooling fan, manufactured by Dynamic Air, is a 16 inch diameter, 10 hp AC induction motor unit pulls air through both the heat exchanger and the alternator. This air passes across the engine and then exits through the top of the APU.

Two electrically-driven pumps, located under the front floor plates, provide the circulation through the drive motors and the power converter assemblies. An engine driven water pump provides the circulation through the engine and oil cooler. This cooling system proved to be reliable and sufficient throughout the M113 Electric Drive Vehicle testing and the demonstration periods of this project..

3.10 M113 Suspension and Track

The running gear of the M113 consists of a sprocket driven 15 inch steel, single pin track that is supported by five, 24 inch diameter road wheels per side and a rear idler.

The track is the predominant source of noise on a tracked. In a hybrid-electric vehicle, reducing noise is critical to the effectiveness of the vehicle in combat

situations. To study the reduction of noise in the M113 Electric Drive Vehicle, an effort was undertaken by ARPA/TACOM to incorporate AAI Band Track on the vehicle in an attempt to lower vehicle weight and propulsion losses while minimizing vibration and acoustic signature.

AAI Band Track is a flexible segmented track that reduces interior noise and vibration and eliminates chordal action effects. It has a 5.81 inch pitch and weighs approximately 35 lbs/ft, which is slightly less in pitch and weight than other tracks such as the T130E1 Band Track which weighs 42 lb./ft. Although M113 vehicles normally utilize a 15 inch segmented track, the 17 inch wide AAI Band Track was able to be used on the M113 by spacing the suspension system one inch away from the hull.

Section 4. VEHICLE PERFORMANCE

4.1 Electric Propulsion System Specifications

System voltage: In the battery mode, the system varies between 340 and 400 volts DC depending on the battery state of charge and the current draw.

In the engine mode, bus voltage is varied with vehicle and engine speed from 150 to 350 volts.

Engine Power: The engine produces 500 hp at 5000 rpm. However, to increase engine life, the engine speed is electronically limited to 4000 RPM (approximately 375 HP).

Generator Power: The generator rated output power is 312 kW at 9000 rpm with 120°F inlet air. The output is reduced linearly as the speed is decreased. The generator rated output at 4500 rpm is 156 kW.

Motor Torque: The motor continuous rated torque is 321 ft-lb. with 140°F inlet oil. Peak torques are limited by the inverter line current available. The inverter line current is set at 750 amps which can produce 522 ft-lb.

Motor maximum speed: 14,600 rpm.

Motor Gearbox Ratio: 5.28 to 1.

Final Drive Ratio: 3.93 to 1.

4.2 Predicted Vehicle Performance

4.2.1 Speed-On-Grade

Figure 23 presents predicted grade performance data for the 360 VDC battery pack and existing APU used both singularly and in combination.

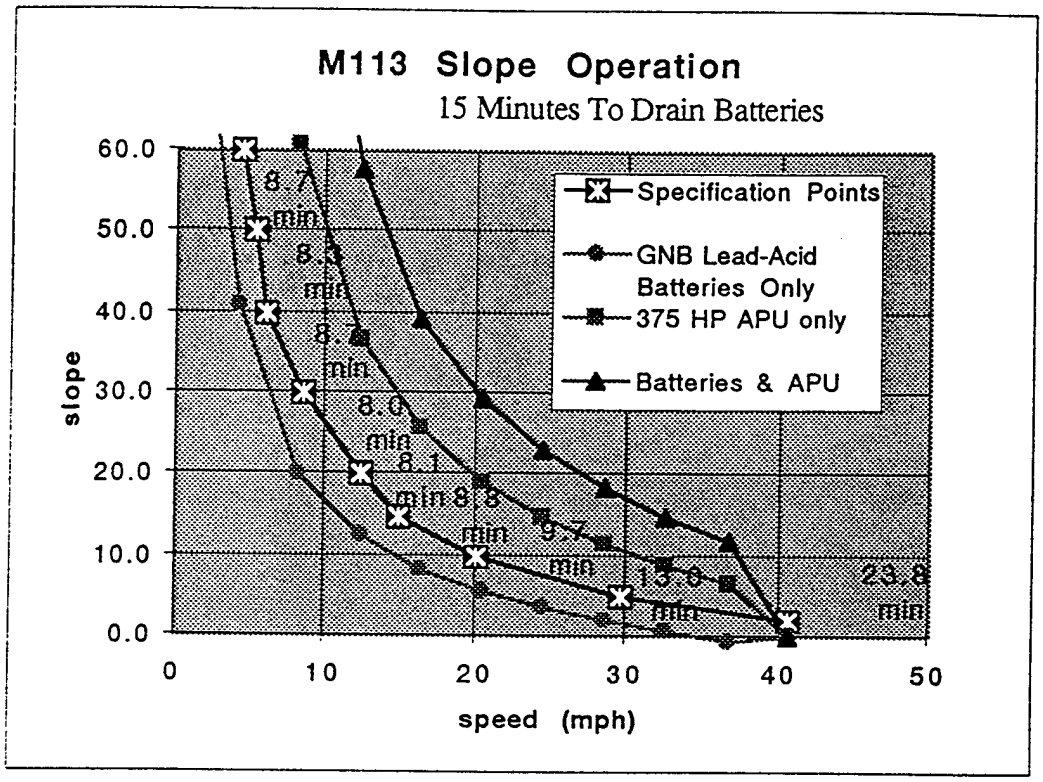

Figure 23: Speed-On-Grade Performance of the Electric Drive M113

It can be seen that the vehicle performance predictions exceeds the requirement at all of the data points. If in service, a grade is encountered that requires the vehicle to operate for a longer duration than the energy stored in the batteries can supply, the vehicle does not just come to a stop. The vehicle will continue to climb the grade with the APU being only source of power.

A benefit that can be seen is the remarkable improvement in grade climbing speed that is realized for duration's of 1 to 15 minutes. Increases 25% to 200% in speed on grade capability would result in significant reduction in time to traverse rolling terrain where the batteries would be able to supply energy going up hills and recover energy normally rejected as heat going down hills.

4.2.2 Acceleration

Figure 24 presents vehicle speed plotted against time for the hybrid vehicle and the standard M113 A3.

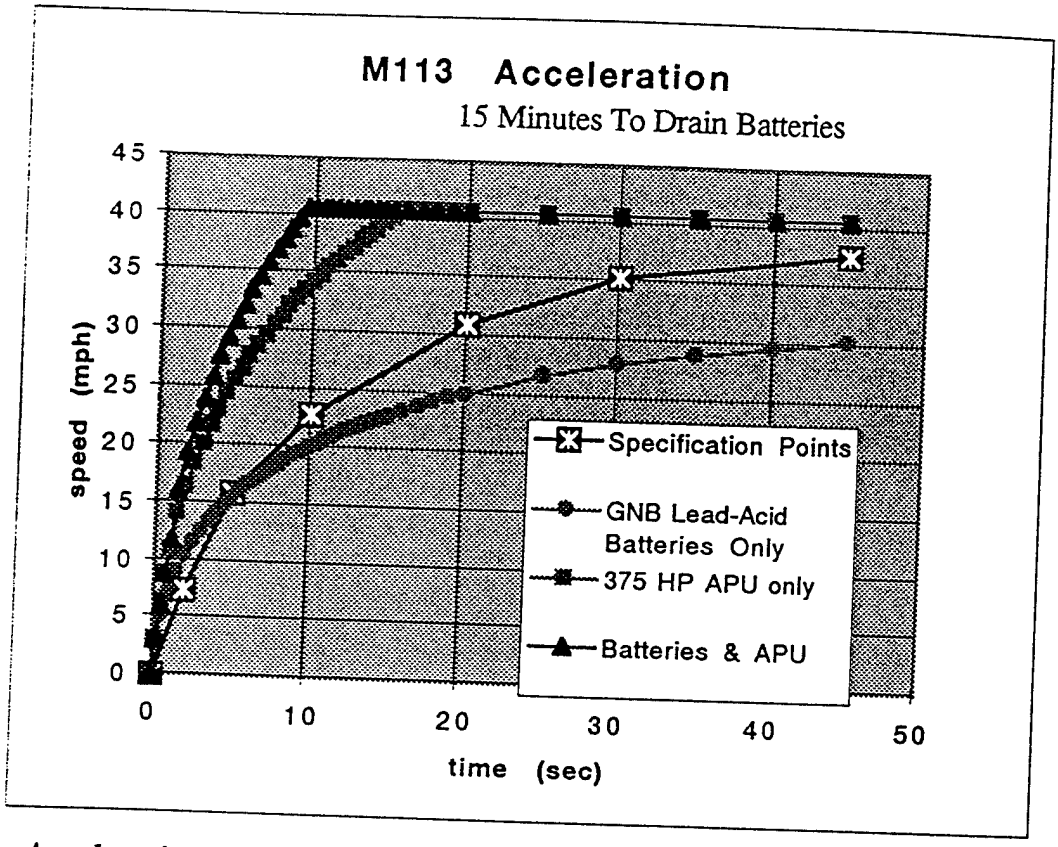

Figure 24: Acceleration Performance of the Electric Drive M113

Section 5. TESTING AND DEMONSTRATION

5.1 Vehicle Testing

No formal vehicle testing was performed.

5.2 Vehicle Demonstrations

After completing the vehicle in May 1994, the M113 has been demonstrated at numerous ARPA and TACOM-sponsored events. These demonstrations have included both static and running displays and are summarized in following table (figure 25).

Date	Where	Purpose and Customer	Activities
May, 1994	Sacramento, CA	ARPA Tri-annual meeting	Static display
May, 1994	Atlanta, GA	EV / Clear Air Show	Running demonstration
Jun, 1994	New York, NY	EV Show	Static Display
July, 1994	Ft Belvoir, VA	TACOM and ARPA Personnel	Running demonstration
Aug, 1994	San Jose	Return to FMC for additional work	Installed second battery pack, safety upgrades, additional seating
Oct, 1994	Chattanooga, TN	TACOM and ARPA Personnel	Running demonstration
Nov, 994	Smuggler's Notch, VE	ARPA Tri-annual meeting	Running demonstration. Hill climbs, races
Dec, 1994	Warren, MI	TACOM and ARPA Personnel	Running demonstration
Jan, 1995	Atlanta, GA	ARPA Tri-annual meeting	Running demonstration, car crushing
Feb, 1995	Warren, MI	Return to TACOM for additional work	Installed AAI track.
May, 1995	Washington, DC	ARPA Tri-annual meeting	Running demonstration
July, 1995 - Present	Warren, MI	TACOM and ARPA Personnel	Static and Running demonstration

Figure 25: Electric Drive M113 Demonstration Schedule

Section 6. CONCLUSIONS AND RECOMMENDATIONS

Several recommendations resulted from the effort, including recommendations to:

1. Replaced the conventional sealed lead-acid batteries with horizon advanced lead-acid batteries
2. Repackage the batteries to optimize available space
3. Modify the vehicle control system to allow true hybrid operation
4. Perform controlled automotive and dynamometer testing to quantify system performance.
5. Replace the AAI track with Quimpax band track to further reduce vehicle noise and increase system reliability

6.1 Horizon Lead-Acid Batteries

The existing 360 VDC battery pack(s) provide good vehicle performance, but do so at the expense of otherwise useable volume and cargo weight within the M113 vehicle. To better demonstrate that hybrid-electric propulsion can be achieved without a significant reduction in useable space and weight, an energy storage system based on a battery with higher specific energy and power is needed. Additional gains can be realized by repackaging the batteries (see section 6.3, below).

Using separate funding, a study was done to identify a more optimum battery This study also included determining configuration details such as, how many to put in the vehicle, and how they should be arranged. Three different battery types were considered. These are the Horizon Advanced Lead-Acid Battery produced by Electrosource, the STH nickel-cadmium batteries by SAFT and GNB MSB Series High Density Lead-Acid (currently used on the M113 ED vehicle). The first two represent recent advances in battery technology that are commercially available while the third is more representative of current automotive battery designs and is included for a comparison base. Both the Horizon and GNB lead-acid batteries are packaged as 12 volts batteries consisting of six 2 volt cells whereas the SAFT Ni-Cad is packaged as individual 1.2 volt cells. Selection criteria for the M113-Hybrid batteries include:

- Power density at varying rates of discharge - W/kg
- Volume density and packaging constraints - W/L
- Recharge rate

The first two requirements are combined in Figure 26 which shows specific power available for various time duration's and demonstrates the Horizon

battery's ability to deliver more power than the other two batteries. This is true for all duration's and discharge rates. The GNB lead-acid batteries have a greater capacity for short duration's and the Ni-Cd showing superior performance for time periods of 10 minutes or greater. Volume density varied between 76 Watt/liter to 39.5 watt/liter with the Horizon having the highest power densities. Despite their long lengths (770 mm), the Horizon batteries produced the most compact packaging arrangement. Because of the individual cell design of the SAFT Ni-Cd additional space is lost to provide the additional terminal connections required between each cell.

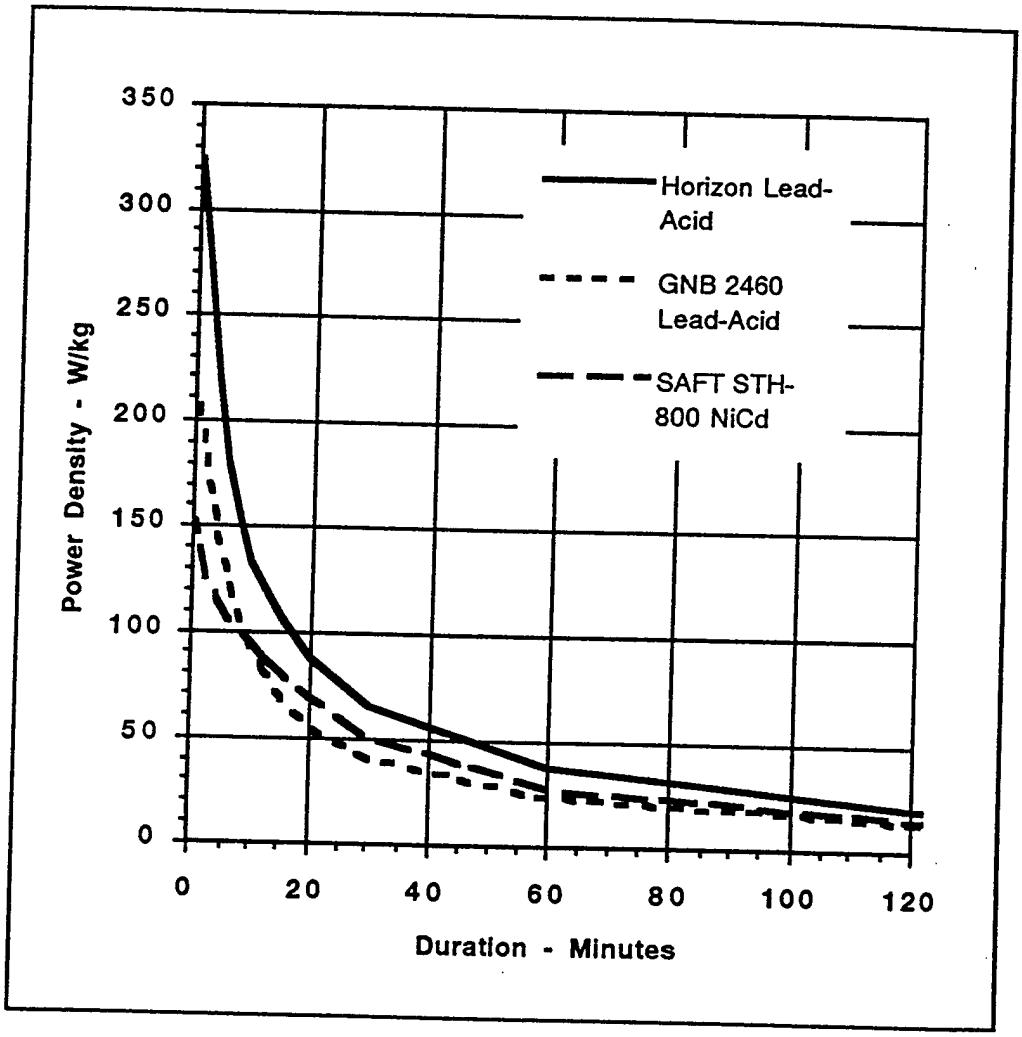

Figure 26: Comparison of power density at varying discharge duration.

Battery recharge rate is an important requirement for an all electric vehicle since this determine the down time between missions. This is of lesser importance with hybrid vehicles since the batteries are constantly being charged through-out the mission except during periods of high power demands. Both the Horizon and Ni-Cd have similar recharge capability with both capable of exceeding a 95% charge within 30 minutes. The standard

lead-acid is far below this requiring up to 8 hours to recharge from a 20% depth of discharge.

It is recommended that 2 parallel strands of 27 Horizon batteries be used (54 total). This will give the vehicle great acceleration and slope climbing ability, along with approximately 30 minutes of operation without the APU on. It is also recommended that a battery management system be used to prevent damage to the system during recharge. The power density and shape of the batteries made these the best choice

In addition, the Horizon batteries needed for the M113 have been purchased by SMUD using separate ARPA funding. SAFT batteries would need to be purchased using project funds.

6.2 Propulsion System Repackaging

Using separate funding, several vehicle concepts were developed to help determine an optimum configuration for the M113 hybrid-electric drive system. This study looked at optional locations for the APU and batteries. The objective was to locate the major components such that:

- Maximum "usable" volume was realized. The back of vehicle should be kept as clear as possible and the driver's space should not be limited.
- The center of gravity of vehicle should be kept close to where it is on standard M113.
- No major changes to hull structure.
- Small number of large groups of batteries is preferable over large number of small groups.

The preferred vehicle configuration is shown in Figure 27.

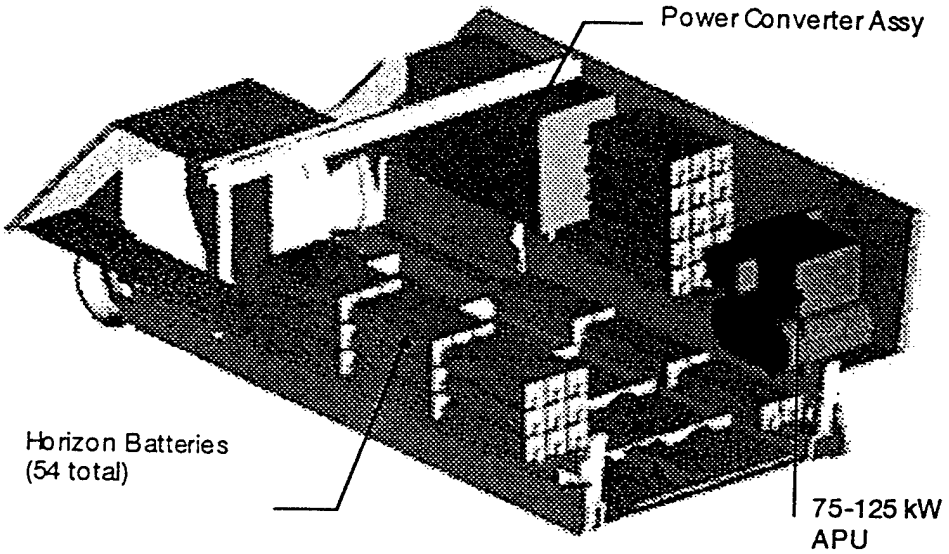

Figure 27: Recommended M113 Propulsion System Layout

The recommended approach has the APU located on the right sponson to replace the existing APU on the M113 electric drive vehicle at the rear of the vehicle. Using this existing location will minimize the amount of rework that would be needed on the hull to relocate the APU to a new location. The power converter assembly is located on the right sponson toward the front of the vehicle. The battery pack consists of (54) advanced lead acid Horizon low profile batteries. The unique size allows 6 batteries to be mounted under the crew seats on each side, resulting in minimal impact to the interior volume. The remaining 42 batteries are located in two packs on the left and right sponsons, respectively.

6.3 Hybrid Operation

At present the electric drive M113 can be powered from either the on-board APU *or* the battery pack(s), but not from both (i.e. hybrid operation). Hardware and software changes are required to convert the existing vehicle to a hybrid.

It is recommended that the vehicle control board (described in section 3.5.4, above) be replaced with the latest generation of the FMC power management controller. This controller is a network-based communication and control system that provides control functions at the "propulsion system-level".

In hybrid operation, the APU will provide the "average" electric power needed to power the sprocket drive motors and auxiliary loads. The batteries will be used as a supplemental source for transient power needs (such as acceleration, steering and grades) and to store regenerated braking energy. The APU will be used to maintain a nearly constant state-of-charge of the battery pack over a typical vehicle mission profile. By using batteries to supply the transient peak power demands, a smaller engine can be installed than would be required for a mechanical drive vehicle. Preliminary studies indicate that an APU engine with a rating of approximately 160-175 HP can be used, rather than the 275 HP engine which is presently installed in the mechanical drive M113-A3 vehicle. Other advantages includes; ability to operate engine along peak efficiency curve and smaller sized auxiliary support systems (radiator, fans, muffler, etc.).

The power management controller will also be capable of controlling the M113 in an "all-electric" mode of operation (i.e. APU off). This mode will be used to demonstrate reduced noise and thermal signatures (stealth operation). The vehicle will also have the capability of recharging the energy storage system from an external power source.

6.4 Quimpax Band Track

As discussed above, in an effort to study the reduction of track-borne noise, TACOM installed the AAI Band Track on the M113 vehicle. While some improvement has been noted, the particular track that has been installed has experienced approximately 700 performance validation / durability miles since its manufacture in 1984. Included in that period has been 2 years of salt water

exposure and there is evidence of degradation of the elastomeric and metallic components.

It is recommended that the AAI track be replaced with Quimpax band track to achieve even greater levels of noise reduction and increase the durability of the system. Quimpax was awarded a TARDEC contract to design and build band track for testing on an M113. This endless belt, segmented, positively driven track is due for roll-out in late October 1994. TARDEC conducted an on site critical design review in mid June 94 where they observed operation of a British APC fitted with Quimpax band track. This vehicle reportedly operated well, leaving TARDEC personnel with the impression that Quimpax will provide a prudent design with high probability of success. Quimpax has also been awarded a contract to provide a medium weight band track for demonstration on a BFV; no activity has taken place on this contract as of this writing.

This track has drive features that enable operation using the standard M113 sprocket and idler. The track is 15 -inches wide and projected to be 26 lb/ft and will retain the same 6-inch pitch and 10-tooth sprocket as the production M113.

6.5 Test and Evaluation

The completed vehicle should be dynamometer tested to evaluate automotive performance. Additionally, testing should be done to quantify signature (thermal and acoustic) reduction levels

It is recommended that the following tests will be performed:

Steering Tractive Effort and Differential Torque: — Steady-state steer performance will be evaluated during these tests using absorption dynamometers. Differential torque will be tested in pivot steer mode, and maximum differential tractive effort will be measured.

Gradeability: — Continuous operation at high power and low/moderate vehicle speeds will constitute this test. The contributions of energy storage to gradeability performance will be quantified during this test.

Heat Rejection: — Cooling tests will be performed at 0.7 TE/GVW continuous.

Vehicle Safety Testing: — Acceptance tests will document that the vehicle meets safety requirements by running typical demonstration scenarios.