DEFEAT AT KASSERINE: AMERICAN ARMOR DOCTRINE, TRAINING, AND BATTLE COMMAND IN NORTHWEST AFRICA, WORLD WAR II

A thesis presented to the Faculty of the U.S. Army
Command and General Staff College in partial
fulfillment of the requirements for the
degree

MASTER OF MILITARY ART AND SCIENCE
Military History

by

MARK T. CALHOUN, MAJ, US ARMY
B.S., University of Southwestern Louisiana, Lafayette, Louisiana, 1988

Fort Leavenworth, Kansas
2003

Approved for public release; distribution is unlimited.

MASTER OF MILITARY ART AND SCIENCE

THESIS APPROVAL PAGE

Name of Candidate: Major Mark T. Calhoun

Thesis Title: Defeat at Kasserine: American Armor Doctrine, Training, and Battle Command in Northwest Africa, World War II

Approved by:

_____, Thesis Committee Chair
Christopher R. Gabel, Ph.D.

_____, Member
Lieutenant Colonel Marlyn R. Pierce, M.A.

Accepted this 6th day of June 2003 by:

_____, Director, Graduate Degree Programs
Philip J. Brookes, Ph.D.

The opinions and conclusions expressed herein are those of the student author and do not necessarily represent the views of the U.S. Army Command and General Staff College or any other governmental agency. (References to this study should include the foregoing statement.)

ABSTRACT

DEFEAT AT KASSERINE: AMERICAN ARMOR DOCTRINE, TRAINING, AND BATTLE COMMAND IN NORTHWEST AFRICA, WORLD WAR II, by Major Mark T. Calhoun, 97 pages.

The 1st Armored Division was the first American armored unit to enter combat against German panzer divisions in World War II. A product of the contentious mechanization process between the First and Second World Wars, the division soon found itself to be outmatched by its German foe. Following a relatively easy victory against the Vichy French after the amphibious landings of Operation Torch, the division lost a series of battles to the Germans, culminating in a decisive defeat at Kasserine Pass. Doctrine (both institutional and equipment), training, and battle command all proved to be problematic for the division. The central question is: Did the 1st Armored Division lose the battle of Kasserine Pass because of deficiencies in American armor doctrine, training, or battle command? An analysis of the Tunisian campaign focusing on these three areas demonstrates that faulty training and inept battle command were partially responsible for the division's defeat; however, the primary reason the 1st Armored Division lost the battle of Kasserine Pass was that it operated in accordance with flawed institutional doctrine and utilized inferior equipment.

ACKNOWLEDGMENTS

I would like to thank my family for their patience and understanding as I undertook this time-consuming project, and my committee for their guidance that helped me to focus my energies and organize my thoughts.

TABLE OF CONTENTS

	Page
THESIS APPROVAL PAGE	ii
ABSTRACT	iii
ACKNOWLEDGMENTS	iv
ACRONYMS	vi
LIST OF ILLUSTRATIONS	vii
CHAPTER	
1. INTRODUCTION	1
2. THE ROAD TO KASSERINE	9
3. DOCTRINE	28
4. TRAINING	50
5. BATTLE COMMAND	62
6. CONCLUSIONS	73
ILLUSTRATIONS	83
GLOSSARY	89
BIBLIOGRAPHY	90
INITIAL DISTRIBUTION LIST	95
CERTIFICATION FOR MMAS DISTRIBUTION STATEMENT	96

ACRONYMS

AP	Armor Piercing
CARL	Combined Arms Research Library, Fort Leavenworth, Kansas
CCA	Combat Command A
CCB	Combat Command B
CCC	Combat Command C
CCD	Combat Command D
FM	Field Manual
GHQ	General Headquarters
HE	High Explosive
HEAT	High-Explosive Antitank
SP	Self-Propelled
TC	Training Circular

ILLUSTRATIONS

Figure Page

1. US Armored Division Structure, 1940 83

2. US Armored Division Structure, 1942 83

3. M3A1 Stuart Light Tank 84

4. M3A3 General Lee Medium Tank 85

5. Map 1, Operation Torch 86

6. Map 2, Race for Tunisia and Axis Initiative 87

7. Map 3, Kasserine Pass 88

CHAPTER 1

INTRODUCTION

In June 1942, as the American 1st Armored Division made its final preparations to deploy to Northern Ireland and prepare for its entry into the war in Europe, it was not preparing to face Field Marshal Erwin Rommel's Afrika Corps. The division was preparing to participate in an invasion of Europe, aimed at liberating France, striking into Germany, and bringing an early end to World War II. While the Combined Chiefs of Staff were planning this operation, two very powerful men had a different idea, for different reasons. President Franklin D. Roosevelt wanted to get American soldiers into combat against Germans as soon as possible, certainly in 1942, and no cross-channel invasion could be planned and executed that quickly. British Prime Minister Winston Churchill opposed making the initial thrust against Germany a cross-channel invasion, preferring to attack through Europe's "soft underbelly" instead, a position he had also maintained in World War I.[1] In the midst of military planning for an invasion of Europe, these two men made the decision to invade North Africa in 1942, putting the cross-channel invasion off until at least 1943.[2] Thus began the planning for Operation Torch, an Allied amphibious invasion of Northwest Africa.

This sudden change of plans posed a number of challenges to the Allied forces, such as assembling a fleet large enough to transport invading forces 4,000 miles to North Africa, attempting to negotiate with Vichy French forces occupying Northwest Africa to forestall organized resistance to the landings, and shifting planning efforts to rapidly prepare for ground combat in Tunisia. The change also posed a major challenge to the

American divisions chosen to invade Northwest Africa. The 1st Armored Division and the 1st and 34th Infantry Divisions were chosen to make the landings at Algiers and Oran. The 2nd Armored Division and the 3rd and 9th Infantry Divisions were selected to land to the west and secure French Morocco. These divisions were chosen not because they were the best prepared, but because they were the only units available. The Allied invasion force that landed in Northwest Africa during Operation Torch faced the Germans much earlier than planned, in a different theater than expected, with equipment that was inferior to that possessed by the Germans and with a severe disadvantage in experience. The fighting in Tunisia was some of the toughest the Americans faced in the European theater, and despite initial setbacks, they emerged a stronger, battle-hardened force, ready to face the challenges that awaited them in Sicily, Italy, Normandy and beyond.

The Allies participating in Operation Torch faced an enemy of dubious quality. The armistice established after the fall of France in June 1940 installed a new French government in Vichy, led by Marshal Henri Philippe Petain. German forces occupied the northern portion of France, while Vichy French forces remained in the southern portion of France and their North African territories. The Vichy French forces in Northwest Africa, consisting of about 135,000 men in 1942, were seriously constrained by the terms of the armistice. The Germans did not allow them to possess heavy artillery, antitank pieces, antiaircraft guns or motorized infantry, although they did leave French naval forces undisturbed. The Germans left the defense of Northwest Africa to the Vichy French forces, promising not to occupy the region with German troops as long as the French upheld the conditions of the armistice.[3]

Shortly after establishment of the armistice, an underground resistance movement began to develop in France, and the British government provided assistance to them as early as November 1940. In August 1941, Prime Minister Churchill recognized General Charles de Gaulle as leader of all free Frenchmen, and General de Gaulle began to form an army known as the Free French Forces with Allied assistance. This resulted in a divided France, with some citizens supporting Petain's Vichy government, and others openly or secretly supporting de Gaulle's Free French Forces. While some minor French North African territories renounced Vichy rule in favor of de Gaulle, the forces defending the key objectives of Operation Torch, French Morocco and Tunisia, remained firm supporters of Marshal Petain and the Vichy government. Their resolve was strengthened shortly after the armistice when British forces, trying to prevent German possession of the French Mediterranean fleet, attacked numerous French vessels resulting in nearly 2,000 French killed and wounded.[4]

The resulting Vichy French distrust of the British had a major influence on strategic planning for Operation Torch. The Combined Chiefs of Staff hoped to avoid protracted combat with the Vichy French forces occupying the landing sites, and they began secret negotiations with Vichy leaders in Northwest Africa as soon as planning commenced to forestall their resistance. The Allies were unable to achieve any definite agreements, but it was clear that any British forces would be met with fierce resistance. Therefore, it was decided to give the invasion an overall American character, in the hopes that the Vichy forces would view Americans as neutral and pose little or no resistance to them. This resulted in an invasion force that would be American-led, despite the fact that their British counterparts were much more experienced.

The Allied force assembled for Operation Torch was put under the overall command of Lieutenant General Dwight D. Eisenhower. The invasion was scheduled for late October, a mere three months away. As the date of the invasion approached, the landing forces focused their training primarily on amphibious exercises in preparation for the initial phases of Operation Torch. Tests conducted in September and early October indicated that the Allied force was prepared to meet only weak resistance, and little time was devoted to preparation for ground combat in Northwest Africa. However, due to a shortage of time and the lack of experienced personnel, the invasion would have to be executed by a force that was not completely ready.[5] Of the 1st Armored Division, only Combat Command B would participate in Operation Torch--the rest of the division would follow in later convoys.[6]

When the invasion forces approached their landing sites on 7 November 1942 (see figure 1), they still were not sure how much of a fight to expect from the French forces they faced. Admiral Jean Francois Darlan, commander of the armed forces of Vichy France, faced a difficult decision. If he resisted, many lives would be lost in a futile cause. If he did not resist, German forces in northern France would occupy the rest of the country. This resulted in ambiguity among local commanders about how to respond, and when the Allied forces landed they met strong resistance in some areas, and little or none in others. Even in areas where the Vichy French decided to fight, the Allies quickly defeated and disarmed them, or in some cases surrounded their positions and offered them an opportunity to surrender. Admiral Darlan began to consider surrender terms the day after the landings, but it took two weeks before he officially accepted the terms and

French resistance ceased throughout Northwest Africa. News of the successful landings and quick victory in North Africa electrified America.[7]

The green American troops were exultant, and predicted an easy victory against an already defeated enemy. But Germany reacted quickly to the new threat, rapidly deploying forces to defend Tunisia. American confidence was quickly eroded as the race to Tunis stalled in the face of tenacious German defenders and the winter mud season, and then it was shattered upon their defeat in Kasserine Pass. Generaloberst Jurgin Von Arnim's Fifth Panzer Army, composed of battle hardened units including the 10th and 21st Panzer Divisions, and Field Marshal Erwin Rommel's Panzer Armee Afrika, delivered this devastating blow. The loss had psychological consequences far greater than its tactical significance, both in America and in the minds of the soldiers involved. But one week later the Americans "came back with a vigor the Germans were unable to withstand,"[8] regaining the initiative and eventually defeating Axis forces in Tunisia. This thesis will explore the limitations in American armor doctrine and training that culminated in the defeat at Kasserine Pass, and how the lessons learned contributed to eventual victory in Northwest Africa.

The purpose of this thesis is to examine American armor doctrine and training prior to execution of Operation Torch, armor tactics and integration of armor in combined arms operations during combat in Tunisia, and lessons learned. This thesis will attempt to answer the following primary question: Did the 1st Armored Division lose the battle of Kasserine Pass because of deficiencies in American armor doctrine, training, or battle command? To determine the cause of the Allied defeat, this thesis will explore the following subordinate questions:

How well did existing US armor doctrine prepare the 1st Armored Division for combat in Northwest Africa? Was the doctrine internally consistent? Was it appropriate for battle against the Fifth Panzer Army? Was the 1st Armored Division suitably equipped to execute its doctrine?

Did the Americans train adequately in preparation for combat in Northwest Africa? Did they train according to doctrine? Did they practice fighting against a simulated threat that used German tactics? Did they train with the equipment they would actually use in combat? Was individual level training effective in preparing replacements for combat? Did collective training adequately prepare units to function as a combined arms force in combat?

How did American commanders actually utilize their armored assets in Northwest Africa? Did they effectively integrate their armor with the other combined arms? Did they fight in accordance with current doctrine?

This thesis will not attempt to examine American armor doctrine and tactics after the Tunisian campaign, although an attempt will be made to identify lessons learned in Tunisia. Due to space constraints, no attempt will be made to examine in detail armor doctrine and tactics used by the British allies, or by the Axis forces, although contrasts will be made between American and German tactics, techniques and procedures to highlight key points. No attempt will be made to analyze the employment of armored forces within the operational context. While operational issues such as supply, intra-theatre resource priority decisions, and command and control imposed key constraints on the commanders in Tunisia, they will not be addressed unless directly relevant to the

tactical employment of armored forces by the American units engaged in combat in Tunisia.

Examination of armor doctrine, tactics, and command and control in Northwest Africa is significant for a number of reasons. The Tunisian campaign serves as an excellent example of the challenges all armies encounter when facing an enemy for the first time. It provides an opportunity to study the performance of an inexperienced army in the initial stages of a new conflict, to evaluate its successes and failures, and to determine their causes. The analysis of a defeat such as the one the Americans experienced at Kasserine Pass can help determine what factors may have led to it, and enable armies to avoid those same mistakes in the future.

The Tunisian Campaign also highlights the importance of accurately identifying an enemy's strengths and weaknesses, and tailoring doctrine to best counter his strengths and exploit his weaknesses. The myth of the panzer's overwhelming combat power and near invincibility overshadowed the true strength of the German army--its ability to stage coordinated attacks, efficiently and effectively integrating armor with the other combined arms. It was only through their initial failures in Tunisia and resulting changes in tactics, techniques and procedures that the American army learned how to defeat the Germans. Understanding what mistakes were made and their effects in the historical context of the Northwest Africa campaign can help the modern Army avoid comparable mistakes in the future.

---

[1]Orr Kelly, *Meeting the Fox* (New York, NY: John Wiley & Sons, 2002), 12-13.

[2]Rick Atkinson, *An Army at Dawn* (New York, NY: Henry Holt, 2002), 16. Roosevelt believed, and indicated to Stalin, that Operation Torch would only delay a

cross-channel invasion until 1943, not 1944, despite General Marshall's warnings to the contrary.

[3]Martin Blumenson, *Kasserine Pass* (Boston, MA: Houghton Mifflin, 1966), 22-24.

[4]Ibid., 22.

[5]George F. Howe, *Northwest Africa: Seizing the Initiative in the West*, U.S. Army in World War II: The Mediterranean Theatre of Operations (Washington, DC: Office of the Chief of Military History, Department of the Army, 1957), 63.

[6]George F. Howe, *The Battle History of the 1st Armored Division* (Washington, DC: Combat Forces Press, 1954), 22 (hereafter cited as *1st Armored Division*).

[7]Alan Moorehead, *Desert War* (New York, NY: Penguin Books, 2001), 445.

[8]Blumenson, 6.

CHAPTER 2

THE ROAD TO KASSERINE

> The 37-millimeter gun of the little American M3 light tank popped and snapped like an angry cap pistol. . . . From the partial defilade of their position on the right flank of the attack, the American banged away at the German tank. . . . The Jerry seemed annoyed by these attentions. Questing about with his incredibly long, ball-mounted, souped-up 75-millimeter rifle, the German commander soon spotted his heckler. . . . [H]e leisurely commenced closing the 140 yard gap between himself and the light tank. The crew of the M3 redoubled the serving of their piece. . . . Tracer-tailed armor piercing bolts streaked out of the American's muzzle and bounced like a mashie-shot in a tiled bath from the bard plates of the Mark IV. . . . In a frenzy of desperation and fading faith in their highly-touted weapon, the M3 crew pumped more than eighteen rounds at the Jerry tank while it came in. . . . Popcorn balls thrown by Little Bo Peep would have been just as effective.[1]
>
> Captain Freeland A. Daubin Jr.

The U.S. Army sent the 1st and 2nd Armored Divisions to Northwest Africa as part of the invasion force for Operation Torch. These divisions were the first products of the mechanization process of the 1920s and 1930s, and it was an open question how well they would perform against their more experienced German enemy. Initially, however, the soldiers in the American armored divisions only faced the Vichy French, and they perceived their rapid victory as proof of an easy campaign ahead. Despite significant failings in leadership, tactics and even common sense, Operation Torch was a success. American tankers saw their shells easily punch through French armor, gaining a false confidence that led to their cries of "bring on the panzers!"[2]

While the 2nd Armored Division remained in Casablanca as protection against a possible Axis counterattack through Spain or French Morocco, the 1st Armored Division prepared for the race to Tunis. Brigadier General Lunsford E. Oliver's Combat Command

B (CCB), attached to the British First Army under Lieutenant General Sir Kenneth Anderson, was the first element of 1st Armored Division to head east. The Allies knew that speed was of the essence--General Eisenhower told General Anderson when assigning him to command of the First Army, "boldness is now more important than numbers."[3] If the Allies could secure the primary ports at Tunis and Bizerte, they would gain control of Tunisia before the Germans could send reinforcements. The Allies would then be free to maneuver against Rommel's Afrika Corps in southern Tunisia, trapping him between their forces and those of Montgomery's 8th Army approaching from the south (see figure 2). General Oliver's CCB raced east on 23 November 1942, not realizing that the Germans had begun to arrive in Tunis on 9 November, and were already moving west to establish a defensive perimeter.[4]

On 24 November, First Army ordered the 1st Battalion of Brigadier General Paul Robinett's 1st Armored Regiment to create what the British called a "tank infested area" in a 100 square mile area around Chouigui Pass. This purely armored force raced forward--in General Robinett's words "the battalion was on its own, having no infantry or artillery and little air support. Reconnaissance, maintenance and fire support were limited to organic means within the battalion."[5] On 26 November a column of thirteen German Mark III and IV panzers approached the 1st Battalion's A and B companies, who were holding the entrance to the pass along the Mateur Road. Company A, commanded by Major Carl Siglin, defended the entrance to the pass. Company B, commanded by Major William Tuck, positioned itself on a reverse slope with orders to attack the enemy column from the left rear once the battle was joined. The battalion commander, Lieutenant Colonel John K. Waters, ordered a tank destroyer section forward to attack the

approaching column. Three halftracks armed with 75-millimeter cannon engaged the flanks of the approaching panzers at a range of 1,000 meters. The tank destroyers had no Armor Piercing (AP) or High Explosive Anti Tank (HEAT) ammunition[6], and after firing thirty High Explosive (HE) rounds with no effect against the enemy tanks, they withdrew. The panzers continued their advance, and the first tank battle between American and German units in World War II, "The Battle of Happy Valley," began.

As described in this chapter's epigraph by Captain Freeland Daubin, a tank commander in Company A, the American tankers quickly learned how ineffective their highly touted 37-millimeter cannon was against German armor. Company A boldly raced into the pass to attack the German Mark IV panzers, but within ten minutes, half of Major Siglin's twelve tanks were destroyed.[7] Captain Daubin's tank was destroyed and his crew killed, but he survived and was later evacuated to a hospital in the rear. In their haste to destroy Company A's M3 Stuarts, the German force had not noticed Company B. Major Tuck's Stuarts, firing from their defilade positions, surprised the Germans and took advantage of side and rear shots to rapidly destroy nine of the thirteen panzers. The rest of the German tanks withdrew, but during the ensuing pursuit and mop-up operations Major Siglin was killed by an armor piercing shell that penetrated his tank's turret.[8]

The first tank battle between Americans and Germans had ended in a draw, and other engagements west of Bizerte and Tunis were similarly met with strong German resistance. By 28 November the Allies suspended offensive operations in Tunisia. They had miscalculated the Germans' ability to react rapidly to the Allied invasion; intelligence officers had underestimated the number of warplanes and transport aircraft the Germans could muster to support the defense; and General Anderson's First Army

was dangerously spread out over long, unsupported lines. General Eisenhower reported to General Marshall: “My immediate aim is to keep pushing hard, with a first intention of pinning the enemy back in the fortress of Bizerte and confining him so closely that the danger of a breakout or a heavy counter-offensive will be minimized.”[9]

Unfortunately, the Germans were already planning the counter-offensive Eisenhower feared. The Germans committed all their available resources to an attack on Bordj Toum and Medjez-el-Bab on 6 December 1942. Two panzer columns with a total of sixty tanks attacked southwest along either side of the Medjerda River, and a panzer regiment made a sweeping flank attack to the south to take Medjez from the rear. Once again, the Allies found themselves severely outclassed by the German tanks. After several hours of desperate fighting the Allies had suffered severe losses and were forced to retreat. Three battalions from CCB were thinly spread out along the Bordj Toum highway and in danger of encirclement and annihilation. The evacuation of these battalions from Bordj Toum to Medjez-el-Bab went on for three days under constant pressure. On 10 December a column of American tanks and other vehicles became mired while retreating along the muddy road. This miring, caused in part by the poor flotation of the tanks’ narrow tracks, resulted in the loss of 18 tanks, 41 guns, and 132 half-tracks and other vehicles to the advancing Germans. After this debacle, CCB had lost a total of 75 percent of its tanks and howitzers, and General Anderson declared them combat ineffective. General Oliver was sent home (later receiving a promotion and a division command), and General Robinett took over command of CCB.[10]

Following a two-week pause in the fighting, the Allies attempted to resume the attack on 22 December. In the first phase of the offensive, a British infantry force

attacked entrenched German defenders at Longstop Hill in an attempt to clear the road from Medjez-el-Bab to Bordj Toum. By 26 December this attack had stalled, and the British were forced to retreat. With the first phase of the offensive ending in failure, it became clear to the Allies that they would not penetrate the German defenses around Tunis and Bizerte before the arrival of the winter mud season brought operations to a standstill. General Eisenhower could not conceal his disappointment that the "pell-mell race for Tunisia" was lost, and the Allies spent the period of inactivity that followed analyzing what went wrong, and looking for a new strategy to defeat the Germans.[11]

Kasserine Pass Battles

Upon realizing that the desired quick victory they had expected in Tunisia was not going to materialize, Allied leaders shifted their attention to the south. They decided it was imperative to prevent the linkup of Generaloberst Juergen von Arnim's recently formed Fifth Panzer Army, operating in northern Tunisia, from Field Marshal Erwin Rommel's Panzerarmee Afrika, approaching from the Mareth Line in the south (see figure 3). The Germans had rapidly built up a formidable fighting force in Tunisia, amassing a strength of 100,000 men by January 1943. In addition, reinforcements were arriving with excellent new equipment, including the *Nebelwerfer* rocket launcher, self-propelled artillery and Mark VI Tiger tanks.[12] Rommel had skillfully executed a fighting withdrawal through Libya, preserving his combat strength while outrunning Montgomery's Eighth Army. The Allies correctly predicted he had the ability to prepare defenses along the Mareth Line with only part of his force, allowing a strong detachment to conduct offensive operations against Allied forces in central Tunisia. To prevent the German forces from linking up, the Allies conceived Operation Satin, in which they

would drive an armored column from Gafsa, through central Tunisia, to the Mediterranean coast. This armored force would isolate the Fifth Panzer Army in the north and serve as the anvil against which Montgomery's Eighth Army could destroy Rommel's Panzerarmee Afrika at the Mareth Line.[13]

Preparations for Operation Satin began in late December with the consolidation of the U.S. II Corps (consisting of the 1st Armored Division, and lead elements of the 1st and 34th Infantry Divisions) under the command of Major General Lloyd R. Fredendall. The Allies' front line defenses consisted of a British corps in the north, the French XIX Corps in the center, and Fredendall's II Corps in the south. The French defensive positions were centered on a north-south hill mass known as the Eastern Dorsal. The French were ill prepared to fight--antitank weapons, artillery, ammunition, boots and uniforms were all in short supply. Unfortunately for the Allies, the Germans had plans for their own offensive, Operation *Fruhlingswind* (Spring Breeze). On 3 January, German *Kampfgruppen* began systematically attacking the fragile French defenses, seizing key passes through the eastern Dorsal. Directed by Eisenhower on 24 January to detach a suitable force to bolster the French defenders, Fredendall ordered Robinett's CCB north. Together with British reinforcements from First Army, CCB helped to stabilize the situation in the center, but their detachment significantly decreased 1st Armored Division's combat power in the south. The now apparent weakness of the defenses along the Eastern Dorsal, as well as the slow rate of Montgomery's advance, led General Eisenhower to cancel Operation Satin in late January. Instead of the full-scale offensive he had envisioned, he ordered II Corps to conduct raids and keep the enemy off-balance

until the time was right for a coordinated attack.[14] Von Arnim had gained the initiative, and he continued to pressure the Allies.

In late January Fredendall's headquarters was located near the growing supply depot at Tebessa. His key responsibilities included securing the airfield at Thelepte, and maintaining the boundary with the French XIX Corps to the north. He ordered Major General Orlando Ward, the newly arrived commander of the 1st Armored Division, to send CCA to Sbeitla, where they would be in position to react to German attacks from Fondouk, Faid or Maknassey. Rather than following the advice of his subordinate commanders to prepare a strong defense of the Faid Pass area, Fredendall decided to take the aggressive course. He ordered General Ward to conduct a raid against Sened Station, as a prelude to an attack to seize Maknassey Pass. The success of this raid, conducted on 24 January against a weak Italian outpost, convinced Fredendall his offensive plans were correct. The Germans recognized the raid for the insignificant diversion that it was, reinforced Maknassey Pass, and continued plans for a large-scale offensive against Faid, the last major pass through the Eastern Dorsal still in Allied hands.[15]

Faid

At first light on 30 January the 21st Panzer Division attacked French outposts at Faid Pass in a precise, three-pronged attack. It was apparent that the two defending French battalions would not be able to hold out for more than a few hours, but still Fredendall hesitated to abandon his plans to attack Maknassey. Prompted by General Anderson to restore the situation at Faid, at 0930 Fredendall finally ordered CCA to counterattack. Commanded by Brigadier General Raymond E. McQuillin, CCA headed toward Faid Pass at a slow pace, hindered by Stuka attacks as well as friendly fire from

American fighters. McQuillin was not in position to counterattack until the next morning, by which time the Germans had stamped out all French resistance and prepared a strong defensive position.[16]

The first American counterattack at Faid Pass began at 0700 on 31 January. A task force commanded by Colonel Alexander N. Stark Jr., commander of the 1st Infantry Division's 26th Infantry Regiment, made an unsuccessful attempt to outflank the German position from the north, while an armor company from CCA prepared for a frontal assault on the pass. This frontal assault was conducted by seventeen Sherman medium tanks from Company H of the 1st Armored Regiment, augmented by a tank destroyer platoon. American artillery support, provided by the 91st Field Artillery Battalion, was severely hindered by German dive-bomber attacks and long-range counter battery fire.[17] Due to the usual lack of close air support, the American tanks were forced to charge up the pass in the face of repeated Messerschmitt strafing runs. They drove right into a trap. German antitank gunners had emplaced their 88-millimeter antiaircraft guns in the approaches to the pass, optimally positioned to engage the attacking armor from three directions. Within ten minutes, more than half of the American tanks were ablaze. The Americans retreated, eventually losing nine tanks and suffering over 100 casualties.[18]

McQuillin attempted a second counterattack the next morning, but once again a lack of coordination between armor and infantry, minimal artillery support and a total lack of close air support doomed the attack to failure. In addition to more than 900 French casualties and 210 casualties from the 1st Armored Division, the loss of Faid Pass meant the Germans controlled the Eastern Dorsal. Another abortive attack at Maknassey Pass on 1 February further weakened the Allies' position. After several days of fighting II

Corps had failed to seize Maknassey, retake Faid Pass or solidify defensive positions along the Eastern Dorsal. According to the 1st Armored Division's official history, the primary reasons for the failure of the counterattacks at Faid Pass were a shortage of infantry to support the attacking armor units, and the failure of separate counterattacking forces to provided mutual support.[19] As both sides paused to regroup, II Corps began preparations to contain the German advance near Sidi Bou Zid.

Sidi Bou Zid

General Fredendall fully expected the enemy to continue their offensive through Faid Pass. On 10 February he approved highly detailed orders assigning Ward's 1st Armored Division to the defense of the Sidi Bou Zid area. These orders specifically defined Ward's scheme of defense, to include his use of reserves, reconnaissance, patrols and obstacles. The division was still widely scattered, with the ad hoc CCC under corps control to the north, and CCB under the control of the French XIX Corps even farther north. Now Fredendall was dictating the disposition of the few units Ward did have under his control from his headquarters 100 miles away. The orders required Ward to defend two hill masses west of Faid Pass, Djebel Ksaira and Djebel Lessouda, maintaining a mobile reserve at Sidi Bou Zid. To the soldiers on the ground, the weakness of this plan was obvious. The positions on the Djebels were too distant to be mutually supporting, and were likely to be quickly surrounded if the enemy attacked. Not only were the Americans outnumbered and outgunned by the enemy, they were ordered to hold indefensible positions and await the attack they all knew was imminent.[20]

The Germans attacked at 0630 on 14 February. While the Allies were focusing their attention to the north, the Germans had secretly repositioned more than 100 tanks

from the 10th Panzer Division, including a dozen new Tiger tanks, to Faid. As the 10th Panzer Division roared through Faid Pass, elements of Rommel's 21st Panzer Division conducted a supporting attack through Maizila Pass at the base of the Eastern Dorsal. The Americans were surprised, outflanked, and quickly overrun. The thinly dispersed American units fell to the Germans one at a time, unable to form a consolidated defense or fall back in any semblance of order due to the speed of the German assault. The infantry battalions on Djebel Ksaira and Djebel Lessouda were quickly surrounded, too far from German mobility corridors to offer any significant resistance, and too far separated from each other to provide mutual support. A platoon of American tank destroyers was isolated and destroyed--by German tanks. Artillery units, who received no early warning due to faulty positioning of forward scouts, could not shorten the range of their shells fast enough to keep pace with the advancing panzers. One battery of artillery after another was overrun by the German onslaught because they waited too long to withdraw their guns.[21]

At 0730 General McQuillin ordered the 3rd Battalion, 1st Armored Regiment to counterattack. Commanded by Lieutenant Colonel Louis V. Hightower, the battalion had been recently outfitted with the new Sherman M4 medium tank. Hightower had already lost one company of ten Shermans that had been surprised in its forward defensive position east of Sidi Bou Zid by the attacking Germans. He led his remaining thirty-six Shermans east toward Djebel Lessouda, with orders to restore the situation. Two miles north of Sid Bou Zid his column was dive-bombed by Stukas; as usual, the Germans enjoyed total air superiority throughout the battle. The dive-bombers had little effect on the tanks, but their bombs' explosions generated a huge amount of dust and debris. As his

battalion continued its advance, Hightower moved to a rise in the ground where he could see the base of Djebel Lessouda, and the battalion of German panzer III and IV tanks waiting for him. Approaching from the north were more tanks, including Tigers armed with the deadly 88-millimeter gun. Surprised to see dozens of enemy tanks, Hightower radioed McQuillin to report that he was too outnumbered for anything more than a delaying attack--then he courageously led his battalion into battle.[22] The Shermans quickly found themselves engaged at short range, from all sides. As reported by Hightower's radio operator, Sergeant Clarence Coley, "Sometimes two or three men got out, sometimes no one got out. Most of the tanks burned when hit." Within minutes, only six tanks remained to accompany Hightower's when he ordered a withdrawal.[23]

A similar disaster sealed the American's defeat the following day. With infantry battalions surrounded on Djebel Ksaira and Djebel Lessouda, General Fredendall ordered a counterattack on the morning of 15 February. General Ward, still desperately under strength and reeling from the previous day's losses, assigned the mission to CCC, under Colonel Robert Stack. Stack's available combat units would be led by Lieutenant Colonel James D. Alger, commander of 2nd Battalion, 1st Armored Regiment. Alger's force, despite the addition of a GHQ tank destroyer company, an infantry battalion from CCC and a few artillery tubes, was much too small to have any real chance of success. Alger's battalion began its attack just before 1300 hours, leaving the 1st Armored Division command post near Sbeitla in parade-ground formation. Shermans led the attack, with tank destroyers on the flanks, self-propelled artillery behind the Shermans, trucks and half-tracks carrying infantry bringing up the rear. Alger's mission was to push the Germans back and hold long enough to allow the stranded infantry battalions to

withdraw, but like Hightower the day before, his unit was totally unprepared for the battle they found themselves in.[24]

As Alger's battalion approached Sidi Bou Zid, they were attacked by 20 Stukas, followed by a concentration of artillery airbursts. Although separated from his infantry support, Alger continued his advance, destroying several machine gun and antitank gun positions before moving east of Sidi Bou Zid. Just as it appeared they would reach the stranded American infantry battalions, the Germans counterattacked. Lieutenant Kurt E. Wolff, commander of a German tank company participating in the attack, described his surprise at the ease with which they ambushed the Americans: "We got to within about 2,000 meters of the enemy. It was simply incomprehensible to us, but he was staring straight ahead at the tank regiment far to the right of us . . . and not one of the enemy tanks turned its turret toward us . . . everything was moving along as if on the training field." The Germans destroyed Alger's battalion with firing-line precision. Of the fifty-two tanks that began the mission, forty-six were destroyed or abandoned. Wolff's company did not lose a single soldier.[25]

After two days of fighting, the Americans had lost 1,600 men, nearly 100 tanks, fifty-seven halftracks and twenty-nine artillery pieces.[26] Fearing the consequences if the Germans were capable of sustaining the offensive, Eisenhower and Anderson decided to withdraw the southern part of their line to the Western Dorsal. They instructed Fredendall to pull back from the Sidi Bou Zid area and prepare a strong defense in Kasserine Pass. Concerned with the risk of withdrawing in the face of the enemy, Anderson finally released CCB to 1st Armored Division control on the evening of 15 February. Fortunately for the Allies, lack of coordination between Arnim and Rommel, vague

objectives for their current offensive, and Arnim's renewed interest in an attack in the north resulted in a lull in German activity. The Allies were allowed to withdraw, retaining control of Sbeitla and Kasserine Pass.[27]

Kasserine Pass

Over the next several days, the 1st Armored Division was ordered to fight a delaying battle at Sbeitla to prevent Axis penetration to the west while the Allies retracted and reinforced their lines around the key supply depot and airfield at Tebessa. Several minor engagements occurred between 16 and 18 February, when the last American units withdrew from Sbeitla. All of the 1st Armored Division's combat commands were finally consolidated southeast of Tebessa, where they were ordered to rest, refit and prepare for the defense of the Kasserine Pass area. The division had suffered 1,093 casualties since 14 February, and the soldiers' morale had suffered as a result. But they had fought well in the delaying action at Sbeitla--Rommel later said the division had fought "cleverly and hard"--and they were not ready to give up yet.[28]

The area commonly referred to as Kasserine Pass encompasses the pass by that name, as well as several other key passes on the road linking Feriana and Sbeitla that control east-west movement through the Western Dorsal towards Tebessa. If the Allies failed to hold the passes around Kasserine, Axis forces would be free to drive northward into the southern flank of the British First Army, forcing them to withdraw to the west and allowing the German bridgehead in northern Tunisia to expand dramatically. The Allied defenders were a combined force of British, American and French units, many of whom had been rushed to the area in the few days since the battle at Sidi Bou Zid. They would face the German 21st Panzer Division, attacking from the southeast and personally

led by Field Marshal Rommel, and elements of the 10th Panzer Division attacking from Sbeitla.

The 1st Armored Division's role in the defense initially consisted only of the detachment of one company of M3 Stuarts and one armored infantry battalion to the combined forces forming the defensive perimeter. The rest of the 1st Armored Division remained in reserve. General Fredendall gave Colonel Stark overall responsibility for the defense of the approaches to Tebessa. The 19th Combat Engineer Battalion, commanded by Colonel A.T.W. Moore, received the mission to defend Kasserine Pass. Fredendall, who at this point only had three and one half battalions of infantry available for combat, chose to augment this meager infantry strength with the 1,200 engineers despite their lack of experience in infantry combat. In their six weeks in Tunisia, the 19th Combat Engineer Battalion had worked primarily on road construction--they had not seen combat, and they had not even completed rifle training before being shipped overseas. Despite their best efforts, this battalion was clearly the weak link in the chain, which Rommel's 21st Panzer Division soon found out.[29]

Field Marshal Rommel gave the order to seize Kasserine Pass on 19 February; the 21st Panzer Division would attack from the southeast, supported by elements of the 10th Panzer Division attacking from Sbeitla to the east. The attack commenced at dawn the next morning. Rommel's forces initially met stubborn resistance, but by mid-morning they were beginning to infiltrate the Allied lines. Seeing the most success in the 21st Panzer Division's area of operations, Rommel moved to the Kasserine train station where he took over direct control of the assault against Kasserine Pass. A vigorous German armored assault, aided by the new Nebelwerfer rocket launcher, caused the inexperienced

engineers to collapse just before noon. A full-scale rout ensued, and within a few hours the panic had spread along the Allied lines on both sides of the pass. Rommel gained control of the heights on either side of Kasserine Pass, and Italian tanks drove five miles west of the pass without encountering any Allied resistance. Fredendall considered abandoning Tebessa, and American engineers began to rig the supply dumps and airfield for demolition in preparation for a full-scale withdrawal. On the evening of 20 February, Fredendall decided to make a final stand. He ordered General Robinett to move his combat command east and take over the remnants of Colonel Stark's command. Robinett would be responsible for the defense of the final approaches to Tebessa. Fredendall told him "if you get away with this one, Robbie, I will make you a field marshal."[30] Kasserine Pass was lost, and it appeared only a desperate effort could prevent a major disaster for the Allies in southern Tunisia.

Fortunately for Robinett, Rommel's forces were not in a position to fully exploit their success. His 10th Panzer Division was at reduced strength because Arnim, in violation of orders from higher headquarters, had retained much of the division's armor for his own planned attack in the north. Rommel made the problem worse by continuing to fight with his forces divided, ordering 10th Panzer Division to continue its attack along the road from Sbiba toward Thala, while the 21st Panzer attempted to exploit the success through Kasserine Pass. A concentrated effort could very well have resulted in a major breakthrough, forcing II Corps to abandon Tebessa and conduct a general withdrawal to the north.

Rommel resumed his attack on the morning of 21 February. Still unsure whether he should make his main effort a thrust north toward Thala or west toward Tebessa, he

ordered cautious advances in both directions. Initially his forces made easy progress, pursuing disorganized Americans in retreat, but they reported organized resistance about nine miles from Kasserine Pass. Robinett's forces had spent the previous night preparing strong defenses around Djebel Hamra. Elements of the 1st Infantry Division held the Bou Chebka Pass on Robinett's southern flank, while a British force defended the pass south of Thala, on Robinett's northeast flank. Rommel, continuing to display uncharacteristic indecisiveness, ordered his forces to hold while reconnaissance aircraft looked for signs of Allied preparations for a counterattack. He finally ordered the attack to continue at 1130, with the 10th Panzer Division leading the main thrust north toward Thala, and a supporting attack by the Afrika Corps toward Djebel Hamra to protect the main effort's flank.[31]

Robinett commanded eight battalions at Djebel Hamra, including eleven artillery batteries of more than fifty guns, and a battalion of tanks commanded by Lieutenant Colonel Henry E. Gardiner. The lead elements of the Afrika Corps, commanded by General Karl Buelowius, began their attack on Djebel Hamra at 1400 on 21 February. The forty panzers leading the attack, supported by Italian infantry from the 5th Bersaglieri Battalion, immediately met strong resistance. Gardiner had taken advantage of Rommel's hesitation by preparing a strong defense. His tanks were positioned in a wadi that provided perfect defilade positions, and his supporting artillery had registered their fires earlier in the day. Massed fires from fifty guns rained down on the attackers as they approached Gardiner's position, followed by flanking shots from antitank guns hidden in the rocks of the nearby high ground. The battle went on for four hours, when Gardiner's force finally repulsed the attackers without losing a single tank. Buelowius

shifted his attack about seven miles south, finding some success in an attack at the seam between Robinett's defenses and the 1st Infantry Division's forces further south, but this attack was soon repulsed as well. High volumes of registered artillery fires, as well as the effective use of a newly issued .50-caliber antiaircraft machine gun that soon became the bane of the Stuka in Tunisia, forced Buelowius to order a withdrawal.[32]

Robinett's successful defense at Djebel Hamra, combined with an equally successful British defense of the road to Thala that turned back the 10th Panzer Division, marked the turning point in the Tunisian campaign. Rommel was low on ammunition, had only four days of rations remaining, and was beginning to receive reports of additional Allied reinforcements headed south from Thala. Worried about Montgomery's imminent arrival at the Mareth Line, Rommel requested and received authorization to withdraw on 23 February. The Allies had narrowly averted a major disaster, rebounding from decisive defeats at Faid Pass, Sid Bou Zid, Sbeitla and Kasserine Pass. The cost was high--the 1st Armored Division lost 1,041 killed, wounded and missing in action.[33] However, from this point forward the Allies held the initiative, which they retained over the next several months as they pushed the Axis forces into a gradually shrinking pocket in Northeast Tunisia. On 13 May 1943 the Allies seized Tunis and put an end to all Axis resistance in Tunisia.

---

[1]Captain Freeland A Daubin, Jr., "The Battle of Happy Valley" (Military Monograph, The Armored School, Fort Knox, KY, 1948), 1.

[2]Atkinson, 159-160.

[3]Ibid., 173.

[4]Ibid., 164.

[5]Brigadier General Paul M. Robinett, *Armor Command* (Washington, DC: McGregor & Werner, Inc., 1958), 64.

[6]Daubin, 28. HEAT was in very short supply at this time, and recently developed armor piercing ammunition had not yet been issued to American units in Tunisia--see also Blumenson, 69.

[7]Atkinson, 204.

[8]Daubin, 30.

[9]Atkinson, 218.

[10]Ibid., 234.

[11]Blumenson, 73.

[12]John Bierman and Colin Smith, *The Battle of Alamein* (New York, NY: Viking Books, 2002), 362.

[13]Kelly, 148.

[14]Atkinson, 303-304.

[15]Blumenson, 102-104.

[16]Atkinson, 307-309.

[17]Howe, *1st Armored Division*, 126.

[18]Atkinson, 311.

[19]Howe, *1st Armored Division*, 132-136.

[20]Ibid., 136-142. The impact of command decisions on the Kasserine Pass battles will be examined in greater detail in Chapter 5, Battle Command.

[21]Atkinson, 340.

[22]Ibid., 341.

[23]Kelly, 191-197.

[24]Blumenson, 160.

[25]Kelly, 204-207.

[26]Atkinson, 353.

[27]Blumenson, 177.

[28]Howe, *1st Armored Division*, 175-180.

[29]Atkinson, 367-368.

[30]Ibid., 376.

[31]Blumenson, 258-266.

[32]Atkinson, 377-381.

[33]Howe, *1st Armored Division*, 198.

CHAPTER 3

DOCTRINE

> [D]iscipline, for hierarchy, for standardization within the military structure . . . create pressures for conformity, and conformity, too, is the enemy of change.[1]
>
> Edward L. Katzenbach Jr.

The 1st Armored Division was activated on 15 July 1940 at Ft. Knox, Kentucky. It was the first of two armored divisions that made up the provisional Armored Force. The 1st Armored Division would be the first American division to face German panzer units in combat, and it would fight using newly developed doctrine and equipment. Only the cauldron of battle would determine if its doctrine was appropriate, and if its equipment was up to the task.

Interwar Doctrine and Equipment Development

Post-World War I antiwar sentiment, as well as congressional budget cuts and force caps, had a profound effect on tank design and armor doctrine prior to World War II. After the allies won "the war to end all wars" in 1918, military leaders and congress debated what the size and role of the post-war military should be. Congressional attitudes mirrored those of the public--a distrust of large standing armies, and a belief in the system of National Guardsmen and Reservists that could be mobilized in time of crisis. The perceived success of the American Expeditionary Force in ending World War I reinforced these attitudes. On the other hand, the military leadership believed that World War I had proven modern war required large, powerful armies that could be mobilized quickly. They remembered the major problems the military had faced when mobilizing in 1917, and they proposed a 500,000-man standing army and universal military training to

overcome these problems in the future.[2] In the end, Congress passed the National Defense Act of 1920, limiting the size of the Army to 297,717 personnel, much lower than the requested 500,000, and discarding universal military training in favor of National Guard and Organized Reserve augmentation.[3]

Reductions in military spending limited the size of the regular army even more severely. In the 1920s, pacifist attitudes and international disarmament initiatives culminated in passage of the Kellogg-Briand Pact (signed by America and 61 other countries in 1928) that outlawed war entirely. As a result, Congress instituted significant budget cuts that further reduced the Army's actual personnel strength, which never rose above 150,000 in the 1920s--just over half of the authorized strength.[4] The eighteen Army corps became mere skeletons of the organizations they were meant to be, with most of the force structure existing only on paper.

These Congressionally mandated personnel caps and reduced budgets created an environment within the Army in which all decisions regarding new doctrine or equipment were influenced by a concern for self-preservation. If an arm gained or lost responsibility for a particular aspect of doctrine, or a particular mission, it meant a corresponding change in personnel strength. The officers responsible for armor doctrine and tank development weighed every decision against its effect on the already undermanned force structure. The military leadership believed sustaining personnel strength was more important than development of new equipment. Therefore, no matter how severely budget cuts affected personnel strength, funding for new equipment was always given lower priority. Pressure to retain personnel in the force structure was so great that when Congress cut the military budget by 20 percent during the Depression, the Army reduced

personnel by only 5 percent. This meant that the part of the budget hit the hardest was that devoted to procurement of new equipment.[5] This had a corresponding impact on the Army's ability to develop and purchase new tank designs.

Debates over the role of the tank and which arm was responsible for the development of armor doctrine further exacerbated the problem. When the Superior Board of 1919 released its findings on the American Expeditionary Force's performance in World War I, a primary theme was the pre-eminence of infantry, and the belief that it was the man, not the machine, that won wars. Tanks had only a minor impact on the conduct of the war, and the Americans had missed the worst years of trench warfare--they still had faith that basic marksmanship and the bayonet charge made the infantry the predominant force in war. The Superior Board even sought to explain the years of stalemate in trench warfare by a "lack of aggressiveness" displayed by either side.[6] In keeping with this basic theme, a provision of the National Defense Act of 1920 dissolved the Tank Corps and placed all tanks under the control of the Chief of Infantry.[7] Armor doctrine and tank design in the decades preceding World War II were driven by the philosophy that tanks existed solely to support the infantry.

Throughout the 1920s the process of tank development was a struggle between the Chief of Infantry, who dictated the tactical principles that determined tank capabilities and characteristics, and the Chief of Ordnance, who was responsible for designing and building the tanks. Each chief was determined to control his area of responsibility, and excluded the other from his part of the process. Infantry Branch set performance criteria without consulting Ordnance Branch to determine if they could build a tank that could meet the criteria, and then Ordnance Branch built a pilot tank that Infantry Branch did not

see until delivery. As a result, by 1930 Ordnance Branch had produced about a dozen pilot tanks, none of which met the infantry's expectations. This was primarily due to the fact that Ordnance could not design a tank that met all of the infantry's performance criteria without exceeding the maximum weight limit of 15,000 pounds (a limit determined by the maximum capacity of engineer bridging equipment). Additionally, Ordnance Branch had no method for following other nations' advances in armor technology, and was reluctant to integrate civilian designs such as the Christie suspension.[8] Twelve years after the end of World War I, the Army was still using now-obsolete World War I tanks, and did not have a suitable replacement ready for production.[9]

In an attempt to break the impasse, the War Department established the first permanent Mechanized Force in 1930, organized under its direct control.[10] The Mechanized Force began training in November 1930 at Fort Eustis, and despite lack of men and tanks, it demonstrated the potential of armored units. Also in 1930, Cavalry Branch began to experiment with mechanization, referring to their tanks as "combat cars" to circumvent National Defense Act provisions that gave sole authority over tanks to the infantry.[11] In May 1931 General Douglas MacArthur disbanded the Mechanized Force, primarily because of widespread opposition to the perception that it might become an autonomous mechanized branch. For the remainder of the 1930s, tank development proceeded along two independent paths--the Chief of Infantry developed tank doctrine, and the Chief of Cavalry developed combat car doctrine, each guided by their particular philosophies, while the Chief of Ordnance was still responsible for technical design and production.[12]

Differences in opinion between the infantry and cavalry resulted in the lack of a unified vision for armor design and function.[13] Although the two arms agreed that the tank's primary role would not be to fight other tanks, the infantry saw armor's role as one of infantry support, while the cavalry believed armor should perform traditional cavalry roles of reconnaissance, pursuit, envelopment, and exploitation. Both emphasized the need for light, fast tanks, with the result that their views on equipment design were similar, but their views on doctrine were significantly different. Institutional bias further exacerbated the problem, as traditionalists in each branch resisted the changes promised by mechanization. As late as 1940, after Poland fell to the German Blitzkrieg, *Cavalry Journal* warned "the idea of huge armies rolling along roads at a fast pace is a dream," and "oil and tires cannot like forage be obtained locally."[14] Many traditionalists within the cavalry and infantry believed the success of Germany's Blitzkrieg tactics could not be achieved against a well-prepared opponent. These beliefs were proven wrong when a German force, led by its powerful panzer divisions, delivered a decisive defeat to France's armed forces in only ten days in May 1940.[15] Development of mechanization in the American Army gained new emphasis.

Dramatic changes occurred during the Louisiana maneuvers of 1940. Two mechanized brigades participated in the maneuvers; the 7th Cavalry Brigade (Mechanized) commanded by Brigadier General Adna R. Chaffee, and the infantry's Provisional Tank Brigade, commanded by Brigadier General Bruce Magruder. The War Department, frustrated by the lack of cooperation between the branch chiefs, placed both brigades and the 6th Motorized Infantry Regiment under Third Army's control during the maneuvers. Third Army utilized these units under various task organizations during the

maneuvers, and combined them into the Army's first provisional mechanized division during the culminating exercise. At the conclusion of the maneuvers, Brigadier General Frank M. Andrews, the War Department G-3, called a meeting between several officers including Generals Chaffee and Magruder, members of their staffs, and Colonel George S. Patton, an observer at the maneuvers. General Andrews did not invite the chiefs of infantry and cavalry to the meeting, despite the fact that they were present at the maneuvers. General Andrews called the meeting to discuss the future of mechanization in the Army, and the unanimous conclusion was that responsibility for armor development had to be taken away from the infantry and cavalry. The attendees recommended formation of a separate mechanized force, utilizing existing light tanks initially, but focused on development of medium tanks in the future.[16]

General George C. Marshall, Army Chief of Staff, approved the formation of this autonomous force on 6 June 1940, ordering the infantry and cavalry to turn over all of their existing mechanized units to the new branch. The experimental Armored Force was activated on 10 July 1940 with General Chaffee as its chief. Existing mechanized units were the building blocks of the force: soldiers and equipment from the 7th Cavalry Brigade formed the nucleus of the 1st Armored Brigade, and the infantry's Provisional Tank Brigade became the core of the 2nd Armored Brigade. The initial Armored Force structure consisted of I Armored Corps, and the 1st and 2nd Armored Divisions, built around the existing brigades (see figure 1).[17] With the advent of the Armored Force, a result of the now undeniable likelihood of war with Germany, mechanized development was finally in the hands of a unified, autonomous branch--but there were still many obstacles to overcome.

The first key decisions the new Armored Force would make concerned armored doctrine, which would then determine armor's missions, organizations and equipment needs. While the creation of the Armored Force was a dramatic innovation for the conservative War Department, the leaders placed in charge were conventional officers with traditional views on the role of the tank. With General Chaffee in charge, the Armored Force developed doctrine for its armored divisions that was essentially the same as that used by the earlier mechanized cavalry brigade.[18] The resulting doctrine was incorporated into the War Department's FM 100-5, *Field Service Regulations*, of May 1941, which stated: "The armored division is a powerfully armed and armored, highly mobile force." Additionally, the manual stated: "The armored division is organized primarily to perform missions that require great mobility and firepower. It is given decisive missions. It is capable of engaging in all forms of combat, but its *primary role is in offensive operations against hostile rear areas.*"[19]

The armored division's structure was designed to support the emphasis on speed and mobility. It would be made up of five echelons: command, reconnaissance, striking, support and security. The striking echelon, an armor brigade, made up the main combat force of the division, and the emphasis on speed in its operations is further described in FM 100-5: "Once the attack is in progress, the speed of the striking force may make its support by artillery impracticable. Combat aviation must take over and execute the missions assigned to artillery in more slowly moving operations."[20] This assumed a capable ground support combat aviation force, at a time when the Army Air Corps' emphasis was on strategic bombing, not close air support. The Army's inability to

integrate close air support in combined arms operations would prove to be a critical weakness in Northwest Africa.

The division structure as determined initially in 1940 did not lend itself to combined arms operations, because it did not provide for the ability to task organize (see figure 1). The striking echelon consisted of one brigade, made up of two regiments of light tanks, one regiment of medium tanks, and one artillery regiment. The support echelon contained the division's infantry and engineers. This structure supported current armor doctrine, in which light tanks would utilize their mobility to conduct operations against rear areas, while medium tanks would provide support if they encountered strong points or significant resistance--both operating independently from the infantry and artillery. The 1940 Armored Division's structure was rooted in General Chaffee's cavalry background, capitalizing on the tank's mobility to rapidly and independently execute traditional cavalry missions.[21]

The War Department's hands-off approach to the development of the Armored Force encouraged its independent nature. General Headquarters (GHQ), activated in 1940 and led by Brigadier General Lesley J. McNair, was responsible for the training of all Army units, and in this capacity provided input on all related matters such as doctrine and organization. Because the Armored Force was established as an autonomous organization, the War Department had to determine what level of influence General Headquarters (GHQ), as well as the infantry and cavalry branches, would have on decisions regarding armor's training, doctrine and organization. The Armored Force remained provisional during its first year of existence, and did not gain the status of an independent arm. However, with the support of General McNair, the War Department

allowed it to make its own decisions regarding doctrine and organization. The existing structure of the Armored Force did not change again until after Pearl Harbor.[22]

American antitank doctrine was refined in 1940 and 1941 in an environment clouded with misperceptions about Germany's Blitzkrieg victories over Poland and France. Convinced that the primary means of German victory was the panzer, rather than the overall effect of their combined arms techniques, the US Army became convinced that infantry divisions had no chance against German panzer formations. However, the prevailing view that American tanks should not be used for directly engaging enemy tanks did not change--that mission would still belong to antitank units. As a result, renewed emphasis was placed on development of tank destroyer doctrine and equipment. In keeping with General McNair's emphasis on pooling and streamlining, and his interest in strong antitank defenses, in 1941 the War Department directed the formation of GHQ antitank groups. These units, initially equipped with existing 37-millimeter and 75-millimeter antitank guns and augmented with infantry and scout cars, would assume an offensive role, and had the primary responsibility for finding and destroying enemy tanks. After impressive performances in the 1941 maneuvers, the War Department directed the creation of fifty-three GHQ antitank battalions. These units would be equipped not only with antitank guns, but also self-propelled (SP) guns (75-millimeter guns mounted on halftracks).[23]

This was a significant commitment to antitank unit philosophy, but in the long run it had a damaging effect on the development and capabilities of the Armored Force. This is primarily because of two factors--tank destroyer doctrine was developed in isolation from the rest of the combined arms force, and resources devoted to development of larger

and more powerful SP antitank systems only perpetuated the concept of the light, fast (and under-gunned, inadequately armored) tank. Brigadier General Paul M. Robinett, commander of Combat Command B, 1st Armored Division during the Tunisian campaign, believed the Army's efforts to develop tank destroyers "led to the squandering of research talent, resources and labor on inefficient weapons . . . these developments probably delayed the production of highly efficient tanks and tank guns."[24]

When America declared war on Japan after Pearl Harbor, decisions were needed quickly regarding the rapid expansion of the Army, to include the proportional expansion of the Armored Force. This brought the question of its overall composition back to the forefront. The key issues hinged on whether the Army should create a "type" armored corps--one with an elaborate and unique permanent organization. This would require the creation of a number of specialized armored service units, from motorized infantry to armored military police. GHQ and G-3 recommended against this course of action, stating that existing units could be attached to the armored divisions as needed, reducing the stress on an already overburdened expanding Army organization. They recommended a "trim tactical organization, comprising a small headquarters with a minimum of corps troops and a minimum of administrative activity."[25]

Also in keeping with an overall emphasis on streamlining and pooling, GHQ retained control over the separate tank battalion, a force that grew to a strength of sixty-three battalions by early 1943. The GHQ tank battalion, unlike its Armored Force counterpart, was a remnant of the conventional wisdom regarding the tank as an infantry support system. Infantry retained influence over the development of separate tank battalion doctrine. Their concept had these tanks fighting in two echelons--the first would

destroy enemy antitank guns, while the second would accompany the advancing infantry to the objective.[26] In combat in Tunisia, it became evident very quickly that these roles were reversed--tanks were very vulnerable to enemy antitank guns, and relied on infantry to clear them out before they could safely advance.

The Armored Division's last major reorganization before the Tunisian campaign occurred in March 1942. This reorganization resulted in two significant changes (see figure 2): the armored brigade headquarters was disbanded in favor of two "combat commands;" and the ratio of light to medium tanks was reversed, with medium tanks now making up two thirds of the division's armored force. These changes were a response to observations of Germany's armor doctrine. The combat commands (Combat Commands A and B) would receive forces from within the division, as well as augmentation from separate GHQ battalions, to form a force tailored to a specific mission--similar to Germany's battle group concept. The combat commands supported the overall philosophy of pooling by providing flexibility to task organize as needed for the mission. The change to a 2:1 ratio of medium to light tanks was a result of the effectiveness of antitank units against light tanks in the Carolina maneuvers.[27] Unfortunately, the division still contained an imbalance of six armored battalions to only three armored infantry and three field artillery battalions.[28] While these changes represented a greater emphasis on combined arms and incorporated lessons learned from the Louisiana and Carolina maneuvers, they did not significantly change existing armor doctrine. In a matter of months, this doctrine would be put to the test against German panzer units in northwest Africa.

Combat Experience in Tunisia

Upon clearing the beaches and stamping out Vichy resistance to Operation Torch, the tankers of the 1st Battalion, 1st Armored Regiment soon found themselves racing east in an attempt to take control of Tunis and Bizerte before German reinforcements arrived in Tunisia. The Allies' determination to win what General Eisenhower called "the pell-mell race" [29] to Tunis added even more emphasis to the tank's speed and mobility. As the Allies began to move east, armor units took the lead, and soon outran their infantry and artillery combined arms brethren. The ensuing tank battle at "Happy Valley" technically ended as a draw, with the German attackers withdrawing and both sides losing about 10 tanks, but several deficiencies in American armor doctrine and equipment were suddenly, glaringly evident.

The Stuart had several serious flaws (see figure 3). Its 37-millimeter cannon was totally ineffective against a panzer's frontal armor, and Stuarts could only hope to damage a panzer if they attacked from the side or rear, at a range of about 500 meters or less.[30] The gasoline powered Stuarts almost always "brewed up" (caught fire) when hit, and even near misses sheared off the Stuart's rivet heads, which became bullet-like projectiles ricocheting throughout the tank's interior.[31] Their narrow tracks afforded very poor flotation resulting in Stuarts bogging in situations wider-tracked tanks could handle with ease.[32] Because the antiaircraft machine gun was mounted on the rear of the turret, it could only be manned by a soldier seated on top of the tank who was fully exposed to enemy fire. It vibrated excessively; causing it to jam so often it was useless. In Captain Daubin's words, it was "a misconceived abortion."[33] The Stuart's high profile made for a pronounced silhouette, and an easy target.[34] The tank's interior configuration was

extremely cramped, and the turret rotated manually. The crew had extremely limited visibility through narrow "pistol ports," forcing the tank commander to frequently open the hatch and expose his head to enemy fire.[35] Internal communications frequently failed, forcing the tank commander to give directions to the driver through kicks to the shoulders, back or head.[36] These deficiencies were apparent to the Germans as well. During Captain Daubin's ambulance ride after the battle, he had a conversation with a wounded German tanker. In spite of his wounds, the soldier expressed confidence that Germany would win the war. When Daubin asked him why he was so confident, he told him it was because Americans built poor tanks.[37]

At this early stage in the campaign, flaws in American institutional armor doctrine were beginning to show as well. Some of these problems were a result of command decisions, but others were clear evidence that the basic premise resulting in the development of light, fast tanks was flawed. Clearly, American tanks would in fact find themselves facing German tanks in combat, and they were severely outclassed in every respect. Major General J.F.C. Fuller wrote in 1932 "the answer to the tank is the tank," envisioning mobile armored artillery battles in which infantry played no role, and armored vehicles fought each other, relying on the strength of their armor to survive hits from the opposing tanks' projectiles.[38] The British, after two years of desert fighting against Axis forces, clearly knew the tank's job was to fight tanks--evidenced by Anderson's order to create a "tank infested area" at Medjez. It is unfortunate that American leaders responsible for development of armor doctrine in the 1930s ignored General Fuller's predictions. It is unforgivable that they apparently made no effort to

evaluate and update their doctrine with the lessons learned by the British in their two years of combat against Axis forces in North Africa.

Furthermore, as the battle for "Happy Valley" demonstrated, American armor units' propensity to race ahead of their infantry and artillery support (known in the division as "rat racing"[39]) made them extremely vulnerable to German armored attacks. The lack of reliable close air support made the advancing American armor columns even more vulnerable. German air superiority was unquestioned, preventing the Allies from providing the air support called for in FM 100-5. American tanks outran the artillery that was supposed to provide them fire support, exactly as their doctrine described,[40] but the air support that was supposed to replace the artillery rarely materialized. Unlike the closely coordinated German joint air and ground force they were facing, American air and ground units operated under conflicting doctrine. The Army Air Corps' emphasis on strategic bombing, mostly undertaken to ensure their status as an independent arm, resulted in a lack of coordination with ground units--a reality in direct conflict with the theory of American armor doctrine.[41] According to Field Manual 31-35 of 9 April 1942, *Aviation in Support of Ground Forces*, "The final decision as to the priority of targets rests with the commander of the supported unit." But the same manual failed to direct the assignment or attachment of air forces to ground units. The result was a fierce debate between air and ground commanders about the meaning of Field Manual 31-35 regarding command and control of air forces. In addition to this long-standing debate, the Allies in Tunisia lacked effective air-ground support teams, suffered from poor training in close air support techniques, and planners for Operation Torch failed to consult with experts in British air operations to learn from their experiences in the desert campaigns of 1941 and

1942.[42] This basic doctrinal conflict, made worse by air unit constraints, such as limited maintenance capability and distant airfields, meant Allied armor units rarely had any close air support. As a result of the lack of clear lines of authority and priority guidelines for use of air assets, responsive close air support never materialized in Tunisia, and armor columns repeatedly went on the offensive with little or no fire support, while being subjected to unopposed air attack.[43] The ineffectiveness of the American tanks' anti-aircraft machine guns made them essentially defenseless against these attacks. In *The Battle History of the 1st Armored Division*, close support of Allied ground units in November 1942 is described as "pitifully inadequate or totally wanting."[44]

General McQuillin's counterattack of 14 February at Faid Pass further demonstrates the key flaws in American armor doctrine. Despite being equipped with the newly fielded Sherman M4 medium tank, Lieutenant Colonel Hightower's battalion was clearly unprepared to face German panzers. A much better tank than the M3 Stuart or General Lee (see Appendix D), the Sherman's 75-millimeter gun could penetrate the frontal armor of a panzer III at 1,500 yards, while the panzer III's 50-millimeter shell could only penetrate the Sherman at 500 yards or less. The British units equipped with Shermans in North Africa had quickly learned how to exploit these advantages, but apparently this information had not been passed on to their American counterparts in Tunisia.[45]

To make matters worse, Hightower was leading his battalion into a fight never envisioned by American armor doctrine. This was not the attack against enemy rear areas described in FM 100-5. Contrary to the philosophy that had been a cornerstone of American armor development for two decades, Hightower was leading his battalion in a

direct attack against a powerful enemy armored formation, supported by mechanized infantry, artillery, and emplaced 88-millimeter antitank guns. Despite Hightower's bravery, his battalion's lack of readiness for this battle was immediately apparent. Rather than taking advantage of their mobility to outflank and confuse the panzers, they approached them in a dense group, operating more like mobile antitank guns than tanks. Further demonstrating their lack of experience, the American gunners started firing well outside their effective range, betraying their positions and wasting valuable ammunition. In contrast, the German tanks quickly spread out, concealing themselves in the heavy dust generated by the Stuka bombs and rolling tanks to envelop the Shermans. Losing their firepower standoff advantage, the Shermans quickly found themselves engaged at short range, from all sides. Panzer III and IV tanks easily destroyed the Shermans with side and rear shots at short range, while the Tigers' 88-millimeter gun smashed anything it hit. The Shermans also demonstrated their unfortunate tendency to burst into flames, a characteristic that caused the British to give them the nickname "Ronsons." Early model Shermans used highly flammable gasoline rather than diesel fuel, and their gas tanks were poorly protected. More modern, diesel-powered Shermans were arriving in Casablanca and Oran, but due to War Department policy that U.S. troops would be supplied only with gasoline-powered tanks, these were intended for British units. Some of these diesel-powered Shermans would end up serving as replacement tanks in the 1st Armored Division, but not until after the Kasserine Pass debacle.[46] The devastating losses in Hightower's battalion were a direct result of doctrine that failed to prepare the tankers for battle against other tanks, and equipment that was not up to the task.

Hightower's men were clearly inexperienced and unprepared to face the German panzers in battle, but it is hard to blame them for this tragedy. Rather than conducting sweeping penetrations against weakly defended rear areas, or rolling methodically along in support of advancing infantry--leaving the business of tank killing to antitank and tank destroyer units--they found themselves in a head-on fight with a highly experienced panzer battalion. Given the fact that their doctrine did not prepare them for a direct engagement with enemy tanks, and their equipment was not designed for such a fight, it is no wonder that they never stood a chance.

Colonel Stack's counterattack of 15 February met with similarly disastrous results. Stack's available forces, led by Lieutenant Colonel Alger, were far too outnumbered to have any real chance of success. To make matters worse, General Ward's staff hastily drew a straight line on a map to serve as an attack route, estimated enemy strength at half of its actual strength of 120 tanks, and conducted no reconnaissance. Adding to the existing deficiencies in their doctrine, Ward's staff had ignored a basic element; the necessity for fast, bold, aggressive reconnaissance. As stated in FM 100-5: "Success of armored operations depends largely on prompt and aggressive exploitation of the results of reconnaissance."[47]

Alger's battalion repeated the previous day's pattern of advancing into prepared enemy defenses, unsupported by air and failing to fight as an integrated combined arms force. Stuka attacks and artillery airbursts forced the American tank commanders to close the hatches on their turrets ("button-up") as they approached the German defenders. Relying on their pitifully inadequate "pistol ports" that dramatically inhibited their visibility, the Americans were forced to slow to three or four miles an hour. Alger's

column was poorly armored, under gunned, and crawling forward essentially blind--they made the perfect ambush target, and the Germans took full advantage of the opportunity they were handed.

Kasserine Pass

The remnants of the American units overrun at Sid Bou Zid fought a fairly successful delaying action at Sbeitla. They lost many tanks and artillery pieces, as well as hundreds of infantrymen killed, wounded or missing, but they bought valuable time for reinforcements to arrive in the vicinity of Kasserine Pass. The only combat effective element remaining in the 1st Armored Division on 20 February was General Robinett's CCB, which was initially held in reserve as Rommel approached the pass. The hastily assembled American defense of Kasserine Pass crumbled in the face of Rommel's attack, but Robinett's subsequent defense of Djebel Hamra showed was a marked improvement over previous American combat performance. Robinett took full advantage of the minimal time he had to prepare his defenses. He worked through the night to tie in his southern flank with the adjacent 1st Infantry Division defenders, making coordination with Major General Terry Allen on his own initiative, despite lack of guidance from II Corps and the usual highly confused command structure. He repositioned Gardiner's battalion from vulnerable open ground to defilade positions in a wadi, well placed to cover the approaches to Djebel Hamra and covered by concealed antitank guns. Finally, he ensured maximum effectiveness of supporting artillery fires by establishing fire control nets and registering fires prior to the Axis attack. CCB's effective integration of armor, infantry, antitank guns and supporting artillery in this battle was a major improvement in the use of combined arms. Coupled with a determination previously not

seen in American soldiers in Tunisia, this effective defense held despite the Afrika Corps' best efforts. This marked a turning point not only in the Allies' fortunes in the Tunisian campaign, but also in the Americans' ability to overcome existing flaws in armor doctrine and equipment to defeat a stronger and more experienced Axis force.

---

[1]Edward L. Katzenbach Jr., "The Horse Cavalry in the Twentieth Century," *Public Policy 7* (1958), 120-49; quoted in David E. Johnson, *Fast Tanks and Heavy Bombers* (Ithaca, NY: Cornell University Press, 1998), 13.

[2]Johnson, 55.

[3]Ibid., 28.

[4]Ibid., 67.

[5]Ibid., 112.

[6]Ibid., 26.

[7]Christopher R. Gabel, *Seek, Strike and Destroy: U.S. Army Tank Destroyer Doctrine in World War II* (Fort Leavenworth, Kansas: Combat Studies Institute, 1985), 4.

[8]Brigadier General Paul M. Robinett, *Armor Command* (Washington, DC: McGregor & Werner, Inc., 1958), 1.

[9]Johnson, 78-80.

[10]Ibid., 99. This was the Army's second mechanized force. In 1927, Secretary of War Dwight Davis observed a demonstration of the British Experimental Mechanized Force in Aldershot. Impressed by what he saw, Davis ordered the Army Chief of Staff to create and test a similar force. In response, the War Department temporarily assembled the Experimental Mechanized Force in July 1928. The force conducted maneuvers for three months, but the tests were severely hindered by the poor performance of its obsolete World War I equipment – particularly the tanks. In accordance with the War Department's directive, the force disbanded in September 1928.

[11]Christopher R. Gabel, *The U.S. Army GHQ Maneuvers of 1941* (Washington, DC: Office of The Chief of Military History, Department of the Army, 1991), 22-23.

[12]Johnson, 117.

[13]Kent Roberts Greenfield and Robert R. Palmer, *Origins of the Army Ground Forces: General Headquarters United States Army, 1940-42* (Washington, DC: Department of the Army Historical Division, 1947), 56.

[14]Atkinson, 9.

[15]Gabel, *GHQ Maneuvers*, 23.

[16]Johnson, 141.

[17]Gabel, *GHQ Maneuvers*, 24.

[18]Johnson, 145.

[19]War Department, U.S. Army, FM 100-5, *Field Service Regulations, May 22, 1941* (Fort Leavenworth, Kansas: Reprinted by the U.S. Army Command and General Staff College Press, 1992), 263 (hereafter cited as FM 100-5).

[20]Ibid, 264.

[21]Gabel, *GHQ Maneuvers*, 25.

[22]Greenfield and Palmer, 61-68.

[23]Gabel, *Seek, Strike and Destroy*, 9-18.

[24]Robinett, 2.

[25]Ibid., 71.

[26]Johnson, 145-146.

[27]Ibid., 149.

[28]Captain Jonathan M. House, *Toward Combined Arms Warfare: A Survey of 20th-Century Tactics, Doctrine and Organization* (Fort Leavenworth, KS: Combat Studies Institute Research Survey No. 2, 1984), 108.

[29]Martin Blumenson, *Kasserine Pass* (New York, NY: Cooper Square Press, 1966), 73.

[30]Johnson, 192-197. This became a habitual problem for American armor units even after fielding the M4 Sherman medium tank. The War Department's determination to keep tanks light and fast, and only put larger guns on tank destroyers, ensured the Germans would always possess superior tanks. In summer 1944, after the Normandy invasion, Shermans armed with new 76-millimeter guns could not penetrate the frontal armor of the German Panther. Requests by armor officers to mount larger, more powerful

guns on tanks had been ignored. American tankers quickly lost faith in the Sherman, and they had to resort to swarming tactics learned in Tunisia throughout the remainder of the war to have any chance of killing German tanks. Nevertheless, many senior officers, including Generals Eisenhower and Patton, continued to espouse the supposed effectiveness of the Sherman tank publicly, much to the tanker's dismay. Thousands of Shermans and their crews, used as bait to lure Panthers in so their counterparts could achieve side or rear shots, were lost as a result of our failure to field a tank that could compete with those developed by the Germans.

[31]Atkinson, 203.

[32]Daubin, 8.

[33]Ibid., 17.

[34]Howe, *1st Armored Division*, 9.

[35]Daubin, 7.

[36]Atkinson, 188.

[37]Daubin, 31.

[38]Fuller, *Lectures on F.S.R.III (Operations Between Mechanized Forces)* (London: Sifton Praed & Co., 1932), 39.

[39]Robinett, 157.

[40]FM 100-5, 264.

[41]Johnson, 94 and 213.

[42]Shawn P. Rife, "Kasserine Pass and the Proper Application of Air Power," *Joint Forces Quarterly* 20 (autumn/winter 1998-99): 72.

[43]Atkinson, 488-489. Allied close air support remained either nonexistent or totally inadequate throughout the campaign in Tunisia, despite the fact that the Allies had achieved air superiority by April 1943. Enabled by large numbers of aircraft arriving in theater, the Allied forces conducted strategic bombing of German shipping with minimal resistance. When the sinking of dozens of freighters forced the Germans to turn to air transport, the Allies responded with an aggressive air interdiction campaign, destroying 432 Axis aircraft in less than one month at a cost of only thirty-five Allied planes. While invisible to American tank crews, this strategic bombing and air interdiction campaign dramatically reduced the flow of supplies to Arnim's Fifth Panzer Army, indirectly assisting their eventual victory.

[44]Howe, *1st Armored Division*, 63.

[45]Kelly, 189.

[46]R. P. Hunnicutt, *Sherman, A History of the American Medium Tank* (Novato, California: Presidio Press, 1978), 152.

[47]FM 100-5, 264.

CHAPTER 4

TRAINING

> I guess nations going to war must go through a stumbling period before they purge the incompetents.[1]
>
> BG Theodore "Ted" Roosevelt Jr.

Predeployment Training

When General Headquarters (GHQ) was activated in July 1940, the Regular Army consisted of 243,095 enlisted soldiers on short-term enlistments, led by a corps of 14,000 professional officers. These soldiers were scattered among many posts, and dispersed throughout the total activated force of eight infantry divisions, one cavalry division, and two armored divisions, all well below full strength. Another 226,837 soldiers made up the various units of the National Guard. The Organized Reserve consisted of unit blueprints, only to be manned upon mobilization, augmented by 104,228 trained reserve officers who had attended ROTC or Citizens' Military Training Camps.[2] GHQ initiated a massive mobilization effort in September 1940, when induction of National Guard units began. The army brought 278,526 enlisted men into active service by November 1940, more than doubling the size of the active force in only three months. The Selective Service Bill, passed into law on the same date that National Guard mobilization began, would bring another 606,915 selectees into active duty by July 1941. The total strength of the field forces had reached 1,326,577 officers and enlisted men by 1 July 1941, a fivefold increase in less than a year.[3]

This dramatic expansion of the active field forces created significant training challenges. One of the foremost was the manning of units whose Tables of Organization

and Equipment (T/O&Es) were frequently changing. Observations of German Army tactics and organization caused the various arms to update their T/O&Es to meet the new threat, and these changes created a ripple effect throughout the network of interlocking unit organizations. One of the most significant of these changes was the creation of the Armored Force on 10 July 1940. Initially consisting of two brigades, this force underwent a rapid expansion to four armored divisions by March 1941. As the number and size of armored organizations increased, the existing pool of experienced personnel was spread out among these units to form a training base on which to build the new organizations. This process was unavoidable, but caused significant turbulence within the armor community's experience base.[4]

GHQ faced significant challenges accomplishing their mission of training this rapidly expanding force for combat. Prior to the activation of GHQ, training had been the responsibility of the field armies, and no standardized Army-wide training plan existed. The GHQ chief of staff, Brigadier General Lesley J. McNair, and his staff of only twenty-four officers had very little time to develop and implement one. GHQ issued a national training directive in September 1940 that focused on standardization of basic and small unit training, and did not address specialized skills training. Maneuvers of mobilized guard units conducted in 1940 found significant deficiencies including poor physical fitness, substandard individual soldier training, outdated or nonexistent equipment, old and unserviceable field gear, and an aged and untrained officer corps.[5]

In addition to writing field manuals and advising the War Department on unit structure, GHQ addressed the problems identified in the 1940 maneuvers by developing a thirteen-week mobilization training plan, providing liaison officers to observe and advise

units conducting training, and finalizing plans to conduct maneuvers at the field army level. Even during mobilization for World War I the army had not conducted maneuvers at the field army level. The resulting series of army versus army exercises in Louisiana and the Carolinas became known as the 1941 GHQ maneuvers.[6]

The GHQ maneuvers were highly beneficial training events of an unprecedented magnitude for the US Army, but several key flaws in the their conduct and the implementation of the lessons learned reinforced decisions that hindered armored operations in Tunisia. Major General George A. Lynch, Chief of Infantry, and Major General Jacob L. Devers, Chief of Armor, were both opposed to the concept of mobile antitank forces taking the offense against enemy armor. Contrary to the tank destroyer concept, they insisted that the best weapon to fight the tank was the tank. In spite of their objections General McNair, a vocal advocate of the antitank gun, did not include tank versus tank evaluations in the maneuvers, and implemented procedures for resolving engagements that biased the referees in favor of the antitank guns and tank destroyers.[7] As a result, antitank guns and tank destroyers were unrealistically effective against armored forces during the maneuvers, appearing to validate the concept that the tank should not be used to fight other tanks.[8]

The status of the Armored Force suffered as a result of its poor performance in the Louisiana and Carolina maneuvers. Confidence in the effectiveness of the tank eroded, and plans for activation of armored corps were abandoned. Some benefits resulted from the lessons learned in this training, particularly due to the reorganization to the more balanced 1942 armored division structure. A lack of sufficient infantry and artillery support was consistently observed during the maneuvers, and this enabled General

Devers to gain authorization to go forward with the planned reorganization. The new division structure provided a higher ratio of infantry and artillery to armor forces, and reversed the ratio of medium to light tanks in the armored division from 1:2 to 2:1. It also added two combat command headquarters to the division structure, intended to facilitate the creation of combined arms task forces tailored to the demands of specific missions, much like German *Kampfgruppen.* [9] Had there been time for another large-scale training exercise, the 1942 armored division's improved combined arms potential could have enabled armored formations to easily defeat the antitank forces that caused them so many losses in 1941. Unfortunately, while these changes did benefit the armored division in the long run, they did not occur in time to reverse inaccurate lessons drawn from the maneuvers, or give armor commanders the opportunity to conduct training under the new organization.

The apparent success of antitank guns and tank destroyers in the maneuvers ingrained ill-conceived doctrinal concepts into the minds of the participants. For one, soldiers were taught that their existing antitank and tank destroyer systems would be effective against German tanks, a lesson clearly not borne out at Kasserine Pass. Further, tankers participating in the maneuvers spent this valuable training opportunity practicing the missions described in their flawed doctrine, rather than learning how to fight enemy tanks using German tactics--skills they would develop the hard way, at Kasserine Pass. They were utilized throughout the maneuvers as independent tank forces, fighting according to flawed doctrinal concepts that resulted in indecisive results and many losses, rather than as a combined arms force that skillfully integrated armor, infantry, artillery and air power. The change to the 1942 armored division structure facilitated the evolution

of combined arms techniques, but it occurred too late to allow the tankers who would fight in Tunisia to train using those techniques. Throughout the 1941 GHQ maneuvers, the 1st Armored Division conducted large-scale training according to existing armor doctrine. Unfortunately, major flaws in the doctrine, both in organization and equipment, prevented the training opportunity from achieving its full potential.

The 1941 maneuvers also failed to prepare the U.S. Army for effective coordination of ground and air forces. Because of problems such as a furious debate regarding command and control of air assets, as well as the lack of air-ground support teams (both resulting from the continued efforts of the Army Air Force to gain independent arm status), no coherent doctrine of air-ground coordination existed during the maneuvers. Armor unit commanders were not afforded the opportunity to become proficient at integrating air assets in the combined arms operations described in FM 100-5. A similar lack of training was observed among individual soldiers, who were found to be careless of the threat of enemy air and poorly trained in the use of antiaircraft weapons and identification of friend or foe. After the maneuvers, efforts were made to update doctrine concerning use of airpower, but the basic problem of command and control of air assets remained unresolved, and American armored units went to combat in 1942 untrained in close air support and air defense procedures.[10]

After the 1941 GHQ maneuvers, the 1st Armored Division reorganized to the 1942 armored division structure, and in April 1942 deployed from Fort Dix, New York, to Northern Ireland. This deployment resulted in several improvements in the division's training. Personnel transfers, a constant problem for the division since its activation, dropped to almost negligible levels. This stabilization of personnel, as well as the

improved focus that all army units experience in a field environment, allowed General Ward to concentrate on individual and small-unit training throughout the summer of 1942. During frequent gunnery exercises, crews improved their skills at bore sighting and firing on moving targets. Small units regularly conducted lane training, improving tank-artillery coordination and battle drills. Unfortunately, lack of maneuver space precluded large-scale exercises, and no opportunities existed for training with infantry or air units.[11] Despite these constraints, the division took advantage of its opportunity to prepare for combat. After the war, General Robinett described the division's field training exercises as "thorough tests of physical fitness and tactical ability" that "were much more realistic than any I observed in the United States."[12]

Robinett describes his training opportunities in Ireland as realistic, tough and beneficial, but he also points out that serious doctrinal defects were identified but left uncorrected. For example, confusion existed over the role of the regimental commander. Sometimes used on the combat command staff, at other times left in the rear with no staff, the regimental commander was often denied a tactical role and was never clearly in command of his men. The combat commander, on the other hand, led men into combat who had been trained by the regimental commander--preventing him from establishing his authority and developing a rapport with his men. This problem was only made worse during combat in Tunisia, as the division created additional, ad hoc combat commands during the Kasserine Pass battles. Robinett also reported an inadequate proportion of infantry and artillery to tanks, but this problem also went unresolved. The tankers made use of many lessons learned in training, improving tank stowage, communications, traffic control procedures, tactical drills and marching techniques. Unfortunately, several serious

doctrinal defects that they identified in training went uncorrected, and this would cost them dearly in combat.[13]

Once the 1st Armored Division learned it would be involved in Operation Torch, training emphasis shifted to preparation for amphibious landings. With little more than a month to prepare, CCB initiated a comprehensive training plan that included teaching soldiers how to swim, learning how to load and unload the new British-designed Tank Landing Ships (LST), waterproofing equipment, and studying hydrographic reports on anticipated landing areas. There was little time to conduct task-force level, collective training, and none at all to prepare for desert conditions. However, these constraints were less significant than they might have been due to the minimal resistance posed by the Vichy defenders, and the fact that Tunisia did not present the division with typical desert-terrain challenges. Tunisia is a very rocky landscape, cut by long mountain ranges with some mountaintops reaching several thousand feet. This high ground consistently proved to be key terrain, and was very advantageous for defenders once they learned how to use it properly. There was less of a problem with blowing sand than in a more traditional desert, and tanks only generated large amounts of dust at high speeds. In fact, the major environmental challenges of the Tunisian campaign came during the winter rain season--challenges that the division's training in the rain, mud and mountain trails of Ireland prepared them for quite well.[14]

Combat Command B had few opportunities to conduct training after the capture of Oran during Operation Torch. Within two weeks of the landings, during which time most of their effort was spent receiving and consolidating forces, they were part of a British task force racing east toward Tunis. The remainder of the 1st Armored Division

also had no time to conduct in-country training; they arrived in Oran throughout December, and received orders to march toward central Tunisia in early January in preparation for Operation Satin. Nevertheless, the 1st Armored Division's existence since the earliest days of the Armored Force in 1940, its participation in the 1941 GHQ Maneuvers, and its effective use of the training opportunities available in Ireland made the division as well-prepared for combat as any unit in America's inexperienced and rapidly-mobilized army.

Training Results

The division's lack of experience was readily apparent as soon as it encountered German forces in Tunisia. Lack of discipline was a widespread problem, particularly in the early stages of the campaign when units actually raced each other to be the first to shoot at German soldiers.[15] Throughout the fighting around Kasserine, the green American soldiers demonstrated a lack of individual and small-unit proficiency. Basic soldiering skills such as digging fighting positions, reconnaissance, physical endurance, night fighting, use of mines, flank security, identification of friend and foe, use of battle drills and personal weapon proficiency were all lacking.[16] Replacements were routinely sent to the front lines unprepared, often not even qualified with their weapons. In one case, Lieutenant Colonel Henry E. Gardiner's 2nd Battalion, 13th Armored Regiment, received fifty replacements in the middle of the night, only hours before they were to defend against an impending German attack at Sbeitla. The trucks that delivered the green troops dropped them off and drove away before Gardiner could refuse them. Meanwhile, engineers several miles behind the front line blew up ammo dumps

throughout the night in anticipation of a German breakthrough--destroying any confidence the inexperienced soldiers may have had.[17]

Even worse than this lack of basic soldiering skills and discipline was the American tankers' lack of skill in the art of fighting enemy tanks. A training document published by the armor school at Fort Knox, Kentucky in 1943 called *Tankers in Tunisia* contains the testimonials of many officers and soldiers from the 1st Armored Division. According to the introduction, this document was intended to teach soldiers "little tricks that saved the lives of fighting men and that may save yours." It stressed the basic skills identified in the many after action reviews published after the Tunisian campaign, as well as "that discipline which makes it possible for each man to depend with safety on all his comrades."[18] The key lesson, however, is evident in the common theme one finds throughout *Tankers in Tunisia*--the "tricks" passed on by the soldiers who lived through Kasserine Pass are intended to give the trainees some idea what it is like to face Germans, specifically German tanks, in combat.

Lieutenant Colonel Hightower describes German tactics when fighting American tanks:

> Generally they (the Germans) try to suck you into an antitank gun trap. Their light tanks will bait you in by playing around just outside effective range. When you start after them, they turn tail and draw you in within range of their 88-millimeter guns. First they open up on you with their guns in depth. Then when you try to flank them you find yourself under fire of carefully concealed guns at a shorter range. We've just got to learn to pick those guns up before closing in on them.[19]

When asked how well stateside training had prepared him for combat, Sergeant James H. Bowser of the 1st Armored Regiment said about gunnery:

> The gunnery instruction they gave us in the States was good. No, sir, I wouldn't change it. There's just one thing you must remember when you're fighting

> Germans. When you shoot at them they stop and try to kid you into thinking you knocked them out. Then when you turn your back on them, they open up again.[20]

Other testimonials share this common theme--the tankers of the 1st Armored division had learned the basic skills they needed to drive their tanks and fire their guns, but they lacked the skills needed to fight experienced enemy armored units.

Many factors combined to result in the generally low fighting quality of the American soldiers who participated in the Tunisian campaign. Rapid mobilization of an under strength, poorly trained, widely dispersed army presented GHQ with enormous training challenges. An aged officer corps, many of whom were unfit for duty and had to be cashiered to make way for younger but inexperienced replacements, only made matters worse. Thrust into combat at the van of this rapidly expanding army, the 1st Armored Division had little time to develop its units into an effective fighting force. The result was a lack of American discipline and basic soldiering skills that cost many lives and earned the derision of their British allies, who referred to them (among other things) as "the noisy Americans."[21] On the other hand, the division was the army's most experienced armored unit, it had participated in the unprecedented Louisiana and Carolina maneuvers, and it had made effective use of the opportunity to train in Ireland before Operation Torch. If the division had possessed equipment on par with that of the Germans they fought in Tunisia, and trained to a realistic doctrine that prepared them for the realities of combat against the enemy they faced, the division's training deficiencies would have been minimized.

---

[1]Brigadier General Theodore "Ted" Roosevelt Jr., letter to Eleanor Roosevelt, March 1943, Theodore Roosevelt III Papers, Box 9, Library of Congress, Washington, DC; quoted in Atkinson, 403.

[2]Greenfield Palmer, 1-2.

[3]Ibid., 10.

[4]Ibid.

[5]Ibid., 13-14. The selective service act received the support needed to pass primarily due to the poor performance of these National Guard units in the 1940 maneuvers.

[6]Ibid., 17-19.

[7]Johnson, 149-150. McNair, possibly due to his artillery background, was a key advocate of the antitank gun largely because it was efficient, inexpensive, and could be easily moved, concealed and dug-in for survivability. Because it fired from a stationary position, the antitank gun was very accurate, and had a high rate of fire. Similarly, the open turreted tank destroyer was a lighter and less expensive alternative to building tanks with better armor and larger guns. Unfortunately, in combat the 37 millimeter antitank gun proved to be practically useless against German armor. The tank destroyer was nearly as ineffective, partially because its open turret reduced its survivability. In addition, commanders in the field did not use the tank destroyers as concentrated offensive elements pooled at the corps or higher level, as described by their doctrine. Instead, they piecemealed them by section or platoon to infantry units for frontline antitank defense. See Gabel, *The U.S. Army GHQ Maneuvers of 1941*, 191.

[8]Gabel, *GHQ Maneuvers*, 191-192. Umpires were told the .50-cal machine gun would defeat light tanks at 1,000 yards despite the fact that the .50-cal was no longer considered a real antitank weapon. The 37 millimeter antitank gun was ruled capable of defeating a light tank at 1,000 yards, and medium tanks at 500 yards, even though Ordnance insisted the gun was obsolete, and tests showed it was unable to penetrate one inch of armor at 100 yards. See Gabel, 49. It appears that umpire procedures were intentionally biased in favor of the doctrinal concept that antitank guns and tank destroyers, rather than American tanks, would be used to defeat enemy armor.

[9]Ibid., 178-179.

[10]Greenfield and Palmer, 110-114.

[11]Howe, *1st Armored Division*, 16.

[12]Robinett, 16. Robinett attended a British-taught course on air-ground coordination in August 1942. He described this course as purely theoretical, complacently taught, and lacking any discussion of the enemy's methods or British lessons learned in North Africa. Clearly, the air-ground doctrinal crisis in America was not the only reason for the ineffectiveness of Allied close air support in Tunisia.

[13]Ibid., 17.

[14]Ibid., 29-31.

[15]Atkinson, 181.

[16]Major General Lloyd R. Fredendall, “Notes on Recent Operations on the Tunisian Front, 10 March 1943,” James R. Webb Collection, Eisenhower Presidential Library.

[17]Blumenson, 211.

[18]Armored Command Headquarters, *Tankers in Tunisia* (Fort Knox, KY: Military History Institute, 1943), 1-2.

[19]Ibid., 3.

[20]Ibid., 4.

[21]Atkinson, 243.

CHAPTER 5

BATTLE COMMAND

> Move your command, i.e., the walking boys, pop guns, Baker's outfit and the outfit which is the reverse of Baker's outfit and the big fellows to M, which is due north of where you are now, as soon as possible. Have your boys report to the French gentleman whose name begins with J at a place which begins with D which is five grid squares to the left of M.[1]
>
> MG Lloyd R. Fredendall

One of the most remarkable characteristics of the Tunisian campaign is the abysmally poor leadership displayed by many of the American and British commanders. Throughout the campaign leading to the Kasserine Pass battles, the 1st Armored Division was plagued by poor command decisions, fractured into several ad hoc subordinate elements, widely dispersed with confused chains of command, and hastily thrown into combat in piecemeal fashion. A combination of factors led to the weakness of the command structure: lack of experience, distrust between infantry and armor officers, refusal of American officers to cooperate with French and British Allies, bunker mentality, micromanagement, and even alcoholism. While there were many instances of commanders exhibiting superior leadership, on the whole battle command was a weak point for the Americans throughout the campaign, and directly contributed to their string of defeats leading to the loss of Kasserine Pass.

Problems for the 1st Armored Division began even before they landed on the Algerian shore. The division commander, Major General Orlando Ward, was left in England during the execution of Operation Torch with the bulk of his division, while CCB was detached to join the Center Task Force in the landings near Oran.[2] This

detachment set a precedent of breaking up the division into subordinate commands that were dispersed throughout the theater, in violation of the principles of concentration and unity of command, and in direct conflict with the division's role of independent action described in FM 100-5.[3]

Combat Command B found themselves racing toward Tunis as part of a British task force, and soon received the order to send a battalion forward to establish a "tank infested area" near Medjez. In addition to being detached from their normal headquarters, the American tankers found themselves being ordered to execute missions for which their doctrine had not prepared them. The British army had learned in North Africa that the best weapon against the tank was another tank--a philosophy totally contradictory to American armor doctrine. The ensuing defeat at "Happy Valley" not only demonstrated the American's lack of preparedness for tank against tank warfare, but also caused the general coolness between British and American officers to begin to develop into full-fledged lack of cooperation. Both sides pointed to the other as the reason for the tactical defeats that prevented them from breaking through the German defenses, and General Giraud only exacerbated the problem by refusing to integrate his French forces into the Allied command structure.[4]

After the German offensive in January clearly demonstrated the fragility of the poorly equipped French units in Tunisia, General Giraud admitted it had been a mistake to insist on operating independently. On 24 January, Eisenhower placed the entire Tunisian front, to include all French and American units, under General Anderson's command. The damage, however, was already done. The Germans had obtained a foothold in the Eastern Dorsal, and the Allies had lost the opportunity to establish a

cohesive, well-integrated defense. Rather than taking advantage of this reorganization to consolidate the 1st Armored Division, Eisenhower directed Fredendall to extend CCB's attachment to the French XIX Corps in the north, as requested by Anderson.[5] In addition, Eisenhower suggested the remainder of 1st Armored Division be used to conduct raids against various Axis outposts in the south. Rather than concentrating their armored units in a powerful, mobile force, the Allied commanders scattered them throughout southern Tunisia.[6] By the end of the Kasserine Pass debacle, the 1st Armored Division had been split into four separate combat commands, as opposed to the two around which their force structure was defined.[7]

The impact of this fracturing of the division, and Fredendall's insistence on conducting offensive operations at Sened Station and Maknassey Pass rather than concentrating his forces in a viable defense, directly contributed to the defeat at Faid Pass. Rather than learning from their mistakes, the Allied commanders only made matters worse in the upcoming weeks. During the lull in fighting from 1 February, when the final counterattack at Faid was given up, to 14 February, when Axis forces renewed their offensive, Fredendall's lack of focus and poor decisions set the stage for a decisive defeat at Sidi Bou Zid. Fredendall's orders to Ward, dictating in detail how the defense of Sidi Bou Zid was to be organized, doomed two reinforced battalions to destruction on Djebel Ksaira and Djebel Lessouda. Lieutenant Colonel Russell F. Akers, Jr., an assistant operations officer at II Corps headquarters, developed this defense plan for Fredendall's approval. Akers visited Combat Command A's headquarters at Sidi Bou Zid when he developed his plan, but he did not reconnoiter the forward positions at Djebel Lessouda

or Djebel Ksaira--even when urged to by Colonel Peter C. Hains III, commander of the 1st Armored Regiment.[8]

Even after the fateful order was issued, opportunities to improve the Americans' defensive posture were neglected. General Eisenhower visited the headquarters of both 1st Armored Division and CCA on 13 February, the eve of the battle of Sidi Bou Zid. During briefings at both headquarters General Ward, General Robinett, General McQuillin, and Colonel Hains all expressed concern over the weakness of the American defensive positions. They pointed out that they were under strength, with CCB still detached to the north; the positions dictated by Fredendall were highly vulnerable and were not mutually supporting; and reconnaissance indicated a buildup of Axis forces south of Faid Pass and a corresponding increased Axis counter-reconnaissance effort. Despite his commanders' concerns, Eisenhower failed to take action to improve the situation. Combat Command A's war log noted that he "listened to a description of our situation and dispositions without comment."[9] A week after the defeat at Sidi Bou Zid, as Allied leaders looked for someone to blame for the disaster, Eisenhower reminded Marshall that it "would naturally be a delicate matter for me to interfere directly into tactical dispositions."[10] Whatever the reason for his failure to act, Eisenhower had been briefed in detail on the situation at Sidi Bou Zid, but kept whatever doubts he may have had to himself.

In the end, Fredendall was blamed for the American defeat at Kasserine Pass--he was sent back to America in March 1943 to a third star and a training command. In many ways, the responsibility rested squarely on his shoulders. Fredendall's performance in Tunisia was marred by questionable behavior from the start. One of his trademark

idiosyncrasies was the use of his bizarre code, apparently intended to make transmissions on nonsecure nets unintelligible to the enemy. Unfortunately, since this code had no key, his messages were usually just as difficult for his subordinates to interpret as they were for the Germans. He openly despised his British and French allies, at one point refusing an urgent French request for air reconnaissance support because II Corps did not have responsibility for the affected area.[11] He was also a flagrant micromanager, routinely bypassing General Ward and sending orders directly to combat command or even battalion commander level, without informing Ward of his plans. Not only did this undermine the division command structure, but also his orders were often tactically unsound, as the loss of the doomed battalions on Djebel Lessouda and Djebel Ksaira clearly demonstrated. His refusal to give up plans for raids at Sened Station and Maknassey Pass during the second week of February prevented the 1st Armored Division from consolidating forces in an integrated defense of Faid Pass. When he finally released CCA to reinforce the French at Faid pass, he gave them the conflicting order to reinforce Faid without weakening their defensive position in Sbeitla. Because he waited too long to make a decision, CCA was thrown into battle in piecemeal fashion, after the Germans had already seized Faid Pass, and they were squandered on a hopeless counterattack against a well-prepared German defense.[12]

Possibly Fredendall's most inexcusable flaw was his lack of contact with his troops and subordinate commanders. Throughout January and early February, when elements of II Corps were being systematically destroyed in hastily prepared defenses or ill-conceived counterattacks, Fredendall had a battalion of more than two hundred engineers working full time on an elaborate underground bunker near Tebessa. Rather

than providing survivability support to American defenders at the front, these engineers devoted precious manpower and resources blasting their way deep into the rock face of a ravine to construct a bombproof shelter for Fredendall's headquarters--in an area as unlikely to come under enemy contact as any in Tunisia. American commanders who visited Fredendall's bunker were embarrassed by his excessive concern for security and apparent fear for his own safety. Fredendall was quite fond of this bunker, which he rarely left, despite the fact that it was over one hundred miles behind the front line trace of his defending forces. The resulting lack of contact with his troops caused Fredendall to develop a bunker mentality, making him impatient with the recommendations of subordinates who were familiar with the terrain or the actual conditions at the front.[13]

General Anderson must also share responsibility for the weakness and eventual defeat of the American position in southern Tunisia. His insistence that the German main effort would be in the north despite evidence to the contrary has already been noted. In addition, he refused Fredendall's request to pull his defenders back to new positions along the western dorsal prior to the disaster at Sidi Bou Zid. Fredendall wanted to pull back to more favorable terrain that would facilitate a concentrated defense, but Anderson denied the request because he believed a withdrawal would shake Allied confidence and serve as a sign of weakness to the enemy. If Fredendall had been allowed to pull back, or if Anderson had released CCB back to 1st Armored Division control when requested, Fredendall might have been able to establish a viable defense and stop the Axis offensive. On the other hand, Anderson's performance was not all bad. In fact, he drove the entire 1,000 miles of Allied front to visit subordinate commanders and inspect defensive preparations prior to the German overrun of Faid Pass--something Fredendall never did.

Throughout the Tunisian campaign, General Eisenhower went to great lengths to maintain the coalition, and it is possible he overlooked Anderson's failings initially in order to protect his relationship with his British allies. Anderson was relieved on 19 February by General Harold R. L. G. Alexander, several weeks before Fredendall was relieved. But Anderson's removal was not tied to the Allied defeat--in fact, the command relationship that placed Fredendall's corps under Anderson's command was kept secret until after the war, in an attempt to maintain the image of American primacy in the Tunisian campaign.[14]

Fredendall and Anderson were not the only commanders to perform poorly, and lose their commands, as a result of the Kasserine Pass disaster. General Ward, 1st Armored Division commander, was also relieved of his command in Tunisia. It has already been noted that Fredendall routinely bypassed Ward and sent orders direct to subordinate commands within the division. Perhaps Fredendall undermined Ward because he had arrived in Tunisia later than much of the American invading force, and had not commanded his division as a whole during the initial stages of the campaign. Or perhaps it was merely Fredendall's nature to micromanage his subordinate commanders. What is clear is that not long after the situation started to look grim for II Corps, Fredendall, who had previously paid little attention to Ward, began setting him up to take the blame for the American defeat. On 20 February, with Kasserine Pass lost, Fredendall became despondent, and was often observed nipping bourbon and sitting on a crate with his head in his hands. He considered abandoning Tebessa until a personal visit from General Alphonse Pierre Juin, commander of French ground forces in Tunisia, changed his mind. His lethargy gone, Fredendall began to plan a defense of the approaches to

Tebessa. On 20 February, after remarking to his chief of staff "I'm going to be the goat in this," Fredendall sent an "eyes only" cable to Eisenhower:

> Ward appears tired out, worried, and has informed me that to bring new tanks in would be the same as turning them over to the Germans. Under these circumstances do not think he should continue in command, although he has done the best he could. Need someone with two fists immediately.[15]

Eisenhower did not react to this attempt at damage control, and Ward was still in command when Fredendall was relieved. However, Ward's reputation was shaken, and he never recovered from his string of defeats in the early stages of the campaign. His performance was equally lackluster after Patton took command of II Corps, and the general perception among the Allied high command that he was timid and indecisive sealed his fate. Upon receiving a letter from General Alexander on 1 April 1943 stating, "Ward is not the best man to command the American 1st Armored Division," Patton sent his deputy commander, Major General Omar N. Bradley, to inform Ward he was relieved of command.[16]

Many of Ward's subordinate commanders displayed poor leadership at Kasserine Pass. Brigadier General McQuillin, CCA commander, was described by one of his peers as "a 20th-century George Armstrong Custer, in many ways a genuine blockhead."[17] When Fredendall finally heeded French pleas for reinforcements after the German overrun of Faid Pass, he sent McQuillin with a portion of his combat command to restore the situation. McQuillin moved at an extremely slow pace, finally deciding to bivouac for the night only seven miles short of his objective--providing the Germans ample time to prepare a strong defense of the Pass. When McQuillin finally did attack, he ignored 26th Infantry Division intelligence reports of dug-in German 88-millimeter guns at Faid, and

failed to coordinate his efforts with supporting infantry units. Attacking into the rising sun, McQuillin drive right into a German trap, losing nine tanks and one hundred casualties before making a hasty retreat. In addition to his losses, McQuillin abandoned the 1st Battalion, 26th Infantry Regiment that was conducting a supporting flank attack to the north--eroding what little trust remained between American infantry and armor officers. Not long after the defeat at Kasserine Pass, McQuillin would join the ranks of the many American commanders relieved of command in southern Tunisia.[18]

While many officers performed well in the Battles of Kasserine Pass, their stories are overshadowed by the consistently poor performance of leaders at all levels of Allied command. After the 1st Armored Division's defeat at Sidi Bou Zid, General Eisenhower's confidence in his tankers was so low that he denied their requests for replacement Shermans, for fear of losing them to the Germans. But perhaps the most ironic and telling story of the ineptitude of American commanders is Fredendall's reading to General Ward of a letter he received from General Eisenhower on 4 February:

> One of the things that gives me the most concern is the habit of some of our generals in staying too close to their command posts. Please watch this very, very carefully among all your subordinates. . . . Generals are expendable just as is any other item in an army; and moreover, the importance of having the general constantly present in his command post is frequently overemphasized.

With a knowing look, Fredendall implied that this letter referred to General McQuillin, or perhaps even General Ward, when in fact the letter as a whole was aimed at Fredendall, and Eisenhower's concerns about his Anglophobia and reluctance to leave his headquarters bunker.[19]

American leadership, from Corps to regimental level, was generally poor. British high command performed no better than their American counterparts. Eisenhower,

primarily concerned with maintaining the Allied coalition and lacking proficient officers to replace the incompetents, did little to improve the situation. In the end, only the failings of the equally dysfunctional German high command saved the Allies from an even more catastrophic disaster than the defeat they suffered in Kasserine Pass.

---

[1]Major General Lloyd R. Fredendall, order to Combat Command B, January 1943; recorded in "Report of Ousseltia Valley Campaign, 19-29 January 1943," record group 407, entry 427, National Archives and Records Administration, College Park, MD; quoted in Atkinson, 304.

[2]Howe, *1st Armored Division*, 21.

[3]FM 100-5, 263.

[4]Blumenson, 89.

[5]Bierman and Smith, 365. General Anderson was determined to keep Combat Command B in the north primarily because of bad advice he received from his intelligence officer. The British had long relied on their ability to decrypt German Ultra dispatches in North Africa. In late January, intercepted Luftwaffe signals indicated preparations for a major offensive against British positions at Fondouk, forty miles north of Faid Pass. Anderson was already concerned about an attack in his northern sector, and this intelligence fueled his fears. Even after the defeat at Faid Pass, and indications of German preparations to continue the attack, Anderson still believed the attacks in the south were a feint, and the Germans would make their main offensive in the north. Anderson did not know that the offensive originally planned in the north was already canceled--Ultra had failed to provide that information. This over-reliance on signal intelligence, despite contradictory human intelligence, led Anderson to his decision (approved by Eisenhower) to retain Combat Command B in the north. As a result, General Ward was forced to defend a front of more than sixty miles with nearly half of his division's combat power detached under First Army's control.

[6]Atkinson, 305-306. On the eve of the defeat at Sidi Bou Zid, General Ward had not exercised direct control of Combat Command B since the division was in Ireland. General Anderson finally released Robinett's command back to 1st Armored Division on the night of 15 February, well after the battles at Faid Pass and Sidi Bou Zid were lost.

[7]Howe, *1st Armored Division*, 122. One of these ad hoc subordinate organizations, Combat Command D, was created for the raid on Maknassey and commanded by Colonel Robert Maraist, the Division Artillery Commander. Not possessing the doctrinal number of tanks or support elements, and commanded by an artillery officer rather than a tanker, this was clearly an organization thrown together as a desperate measure due to excessive

dispersal of forces and Fredendall's insistence on focusing already inadequate resources on raids of insignificant value.

[8]Ibid., 136.

[9]Atkinson, 334.

[10]Ibid., 335.

[11]Rife, 72.

[12]Atkinson, 308.

[13]Blumenson, 86-87.

[14]Captain James R. Webb (aide to Major General Lloyd R. Fredendall) letter to Editor, Saturday Evening Post, date unknown. James R. Webb Collection, Eisenhower Presidential Library. Captain Webb stated in this letter that he had attended a meeting between Anderson and Fredendall at which Anderson verbally claimed full responsibility for the American defeat at Kasserine Pass. Webb wrote this letter during a period when details about the Tunisian campaign were being declassified, and General Fredendall and other generals who had been relieved during the war were attempting to defend themselves from adverse statements in the media. Webb's papers and letters are clearly biased in Fredendall's favor, and further research failed to produce a third-party record of the meeting that Webb claims to have attended where Anderson took the blame for the Kasserine Pass disaster.

[15]Atkinson, 374.

[16]Ibid., 450-452.

[17]Ibid., 308.

[18]Ibid., 308-311.

[19]Ibid., 369.

CHAPTER 6

CONCLUSION

> I think the best way to describe our operations to date is that they have violated every recognized principle of war, are in conflict with all operational and logistic methods laid down in text-books, and will be condemned, in their entirety, by all Leavenworth and War College classes for the next twenty-five years.[1]
>
> LTG Dwight D. Eisenhower

It is evident that the tankers of the 1st Armored Division who fought in the Tunisian campaign were limited by numerous inconsistencies in their institutional doctrine, inferior tanks, inadequate training, and the errors of commanders at all levels. All of these deficiencies contributed to the series of defeats suffered by the 1st Armored Division. Is it possible to identify any of these deficiencies as the primary reason for the division's defeat at Kasserine Pass? This research indicates that doctrine--both institutional doctrine and equipment--was the Achilles heel that doomed the tankers of the 1st Armored Division to defeat.

Many contemporary sources point to inadequate training as the reason for the American defeat at Kasserine Pass, emphasizing the low level of readiness upon mobilization in 1941, the short duration of initial entry training (increased from thirteen weeks to seventeen weeks in July 1943 due to lessons learned in Tunisia)[2], the lack of training on key weapon systems such as newly issued bazookas, and the hasty addition of unprepared replacements to the front lines. Even more significant than these obvious training deficiencies was the fact that the division's soldiers had not yet completed the process of battle hardening that all armies must go through when they first experience combat. In all first battles, success or failure upon initial contact has a dramatic impact on

morale. In Tunisia, the Allies' easy defeat of the Vichy French defenders during Operation Torch resulted in widespread overconfidence. This attitude, resulting in a sense of inevitable victory, was exacerbated by the emphasis on haste during the race to Tunis. The result was the destruction of overextended, unsupported American armor units at the hands of highly superior German combined arms forces in northern Tunisia. Whether initial contact goes well or poorly, soldiers must develop a fighting spirit before they can perform as professionals in combat. This fighting spirit cannot be instilled in training, and it did not show itself within the 1st Armored Division until well after the battles of Kasserine Pass were already lost. According to an Army Ground Forces Observer Report of 29 March 1943:

> The prevailing attitude is that the North African operations is [sic] just another maneuver with live ammunition. The enemy is regarded as the visiting team and this not a major game. Even units suffering heavy casualties did not evince hatred of the enemy; there has been no recognizable effort by the high command to evoke a fighting spirit.[3]

Nevertheless, training was not the primary reason for the 1st Armor Division's defeat at Kasserine Pass. Although it faced the many challenges of rapid expansion and mobilization, and lacked battle-hardened troops, the division was built on a nucleus of highly experienced tankers who benefited from a longer period of collective training than most of the units fighting at Kasserine Pass. The division participated in both of the 1941 maneuvers, providing it an unprecedented level of predeployment training, and it made effective use of its opportunities to train in Ireland while preparing for Operation Torch. The real problem with the division's readiness for combat in Tunisia was not that it was badly trained, but that it was reasonably well trained in the execution of a fatally flawed doctrine. Tankers were skilled in the use of their tanks--Captain Daubin's 37-millimeter

main gun rounds failed to defeat German panzers not because they missed, but because they bounced harmlessly off superior German armor. American tank columns clumsily advanced into one doomed engagement after another not because they were untrained, but because in training they had practiced a doctrine that was not effective against the German combined arms threat they faced. The tankers of the 1st Armored Division fought without artillery and infantry support not because they had ignored their doctrine during misguided training events, but because they had dutifully trained according to doctrine that emphasized speed and mobility at the expense of combined arms. When, as ordered, unsupported armored units engaged the enemy tanks their doctrine had said they would avoid, they lacked close air support not because they had neglected their training, but because the Army Air Corps' desire for independence had taken precedence over their participation in the combined arms team.

Sadly, most of these doctrinal flaws were no surprise to the men of the 1st Armored Division. While the absolute inferiority of American tanks came as a surprise to many of their crews, most of the fatal flaws in American armor doctrine had clearly shown themselves in training. Unfortunately, the mistakes made during the interwar years were too firmly institutionalized to be corrected during the limited time the division had available for training.

A case can also be made for battle command as the division's Achilles Heel. It is true that commanders at every level performed to a less than desired degree, some almost criminally so. Major General Ward, the 1st Armored Division commander, exercised nominal command of a fractured division throughout the campaign. His division was split up before leaving Ireland, with CCB detached to British command during Operation

Torch, while the remainder of the division and General Ward followed several weeks behind the initial landings. Even after General Ward's arrival in Tunisia, he was constantly bypassed by Major General Fredendall, the II Corps commander, who sent orders direct to his subordinate commanders, and continued to piecemeal his combat power throughout southern Tunisia. Fredendall's orders were often misguided, primarily due to his isolation in a bunker far behind his front line units, and even General Eisenhower passed up the opportunity to make adjustments to Fredendall's dispositions before Sidi Bou Zid. General Anderson, First Army commander, only made matters worse by insisting on retaining CCB to defend against a German attack through Fondouk that never materialized. Leadership deficiencies at lower levels of command, from lack of cooperation between armor and infantry officers, to alcohol abuse, inexperience and poor decision-making skills, resulted in generally ineffective leadership throughout the division. General Robinett, perhaps the most competent commander in the 1st Armored Division, was detached to First Army until the battles at Kasserine Pass were essentially lost, not playing an effective role in the fight until the defense of the approaches to Tebessa. In addition, his tendency to be outspoken and free with criticism gave him a reputation as a difficult man to get along with and undermined his chances of promoting positive change in the division.

As flawed as Allied battle command was, Rommel and Arnim did their best to level the playing field. Arnim, concerned more about taking his share of the glory than supporting a concentrated Axis effort, repeatedly refused to cooperate with Rommel. He failed to coordinate his efforts in the north with Rommel's attacks in the south, even when Field Marshal Albert Kesselring, commander of all German forces in Italy and

North Africa, specified Rommel as overall commander and designated the attack in the south as the main effort. Arnim's refusal to detach key armored units of the 10th Panzer Division, including a battalion of the powerful Tiger tanks, weakened Rommel's forces in the south and resulted in a lack of concentration of effort. Rommel's personal performance was hindered by poor health, despondency over his impending relief, and an uncharacteristic indecisiveness.[4] His morale seemed to improve during the period of easy victories at Faid Pass and Sidi Bou Zid, but after the 1st Armored Division's determined resistance at Sbeitla, his energy level began to wane. His indecisiveness was evidenced by his failure to concentrate his forces in a single, powerful effort after he had seized Kasserine Pass. One powerful thrust, either north toward Le Kef, or west toward Tebessa, could have resulted in a major victory for Rommel and delayed the eventual Allied victory in Tunisia for months. Instead, Rommel continued to divide his forces, attacking on two axes. Meeting stiff resistance in both directions with insufficient offensive strength, Rommel failed to perceive the fragile position the Allies were in, and withdrew.

While Allied commanders at all levels performed badly, their ineptitude was not the primary reason for the 1st Armored Division's defeat. One reason is that the German high command performed just as badly, perhaps costing them a decisive strategic victory in southern Tunisia--but they still beat the Americans badly at Kasserine. In addition, while many of the 1st Armored Division's officers were clearly incompetent, and others performed heroically, they all were hindered by the severe limitations of their flawed doctrine. When Allied commanders ordered their tanks to race ahead of supporting infantry and artillery in an effort to seize Tunis before the German reinforcements arrived, they were only making use of their armored units' superior speed and mobility,

according to current armor doctrine. When Captain Daubin's regiment found itself in the first tank battle between Americans and Germans at Happy Valley, it did not lose a company of tanks in a matter of minutes because of bad leadership, but because it was outgunned and inadequately armored. In fact, Major Tuck's skillful execution of a surprise flank attack inflicted comparable losses on the Germans, who were forced to retreat.

Many commanders demonstrated inadequate leadership, chief among them Fredendall and Anderson, but even the best commanders had to learn how to overcome the inadequacies of their equipment and the inconsistencies in their doctrine--problems commanders would still struggle with in the Ardennes Forest. Because America entered the war already far behind Germany in armor doctrine and tank quality, and because no concerted effort was made to improve the quality of American tanks, armored units fighting the Germans in 1945 faced many of the same challenges as the tankers of the 1st Armored Division in Tunisia. The superior armor and guns of the German Panther and Tiger tanks meant the American tankers could only defeat them through overwhelming numbers and swarming tactics, resulting in the loss of many American tanks and their crews, used as bait to draw the superior German tanks into flank and rear attacks.[5]

If inconsistent doctrine and inferior tanks were the reasons for the 1st Armored Division's defeat at Kasserine Pass, why did so many after action reviews focus on American training deficiencies, and why were so many commanders relieved? One possible explanation is that officers within the 1st Armored Division failed to relay their concerns about the inferiority of their tanks up the chain of command. To believe this explanation, one has to assume that the American high command was more easily

convinced that their soldiers and commanders were incompetent, than their equipment was inferior. This explanation is made even less likely when reading Eisenhower's instructions to Major General George S. Patton upon his assignment to relieve General Fredendall as II Corps commander. In his instructions, Eisenhower instructed Patton to stage demonstrations of the M3 Stuart's 37-millimeter main gun penetrating the armor of captured German Mark IV panzers for as many of his soldiers as possible.[6] These demonstrations were intended to restore American tankers' lost confidence in the Stuart tank. Messages from Eisenhower to the War Department expressed his reservations about the quality of American armor and antitank forces as early as February 1943. Clearly, Eisenhower was aware in the early stages of the Tunisian campaign that American tank crews had lost confidence in their tanks, and he had passed on these concerns to the War Department in an attempt to take corrective action.

The more likely explanation is that in the immediacy of the crisis in Tunisia observations of poor leadership and faulty training demanded immediate action, and that action had some chance of generating positive results. Flawed doctrine and inferior equipment, the result of a two decade-long series of institutional errors, were less obvious problems, and were much more difficult to address. Although the inferiority of American tanks was soon apparent, it would take months to see the results of design improvements in the field, even if the War Department made a concerted effort to build better tanks--which it did not do. The flaws of inconsistent armor doctrine were less obvious, and were equally difficult to correct--particularly while engaged in combat against a skilled enemy. Only through the lengthy process of learning the hard way, modifying existing doctrine

with techniques developed in the cauldron of combat, would American armor doctrine change.

The inferiority of American tanks and armor doctrine continued to be a problem well after Kasserine Pass, even after lengthy combat experience improved the quality of American commanders, and reform of initial entry and unit training improved basic soldiering skills throughout the army. As late as 1945, American tankers fighting in the Ardennes complained that their Shermans were severely outclassed by German Tigers and Panthers. Eisenhower, who had stubbornly resisted efforts to increase gun caliber and armor thickness on American tanks,[7] asked the commanders of the 2nd and 3rd Armored Divisions to investigate the continued complaints about Sherman tanks in March 1945. Their reports back to Eisenhower were scathing condemnations of the Sherman tank. One armored battalion commander expounded on the price his unit paid for being equipped with the M4 Sherman:

> This battalion has lost 84 tanks through enemy action in nine months of combat. In a tank versus tank action, our M4 tank is woefully lacking in armor and armament when pitted against the super velocity 75-millimeter or 88-millimeter gun of the German tank. Greater maneuverability and speed have failed to compensate for this deficiency, and our tank losses in the Belgian Bulge were relatively high, even when we were in defensive positions. Crews recognized the deficiencies in our tanks, and know that success on the battlefield is attributable to our superiority in numbers of tanks, and resolve to sustain heavy casualties in men and tanks in order to gain objectives.[8]

It is hard to understand why the War Department did not answer the tank problem with a concerted effort to improve the firepower and survivability of American tanks as the war progressed. The explanation is possibly the fact that it just wasn't necessary. As the American involvement in the war in Europe grew, Germany had already suffered the key reversals of fortune at Stalingrad and in the Atlantic War. America's wartime

economy was in full production, and it was an easy matter to produce large numbers of M4 Sherman tanks to replace those lost fighting the superior but less easily replaced German models. Rather than outclassing German armored forces, we simply overwhelmed them. The fact that training improvements and battle hardening of American soldiers and commanders did not negate the obvious inferiority of American tanks and armor doctrine aptly demonstrates that the fatal flaw at Kasserine pass was doctrinal.

Problems in doctrine, training and battle command all contributed to the American defeat, but it was the inferiority of their equipment and the inconsistencies in their doctrine that doomed the tankers of the 1st Armored Division to defeat, and continued to plague the U.S. Army until the end of the war. As future leaders confront the issue of change in the army, it is imperative that they remember the lessons of Kasserine Pass, and avoid the errors of the interwar years that sent countless young men to combat in World War II with inferior equipment and illogical doctrine. Success in war depends upon preparation in peacetime. Readiness requires a rational doctrine that will enable our forces to fight effectively against any threat, and equipment that is suitable to the execution of that doctrine and capable of defeating whatever enemy we might face in the future. If we subordinate doctrine to the whims of institutional bias, and develop equipment that is only effective against an enemy that fights in accordance with current American concepts of opposing forces doctrine, the U.S. Army could well find itself fighting a different war than the one we prepared for, much as we did at Kasserine Pass.

[1]Lieutenant General Dwight D. Eisenhower, letter to Major General Thomas T. Handy, 7 December 1942, Harry C. Butcher Papers, Eisenhower Presidential Library, Abilene, Kansas.

[2]Blumenson, 309.

[3]US Army Ground Forces, Observer Report of 29 March 1943, 2.

[4]Blumenson, 15. Rommel suffered from liver problems and erratic blood pressure, and had gone to Germany to recuperate for several weeks prior to his involvement in the Tunisian campaign.

[5]Johnson, 197-201.

[6]Lieutenant Commander Harry C. Butcher, Naval Aide to Major General Eisenhower, "War Diaries," 3 March 1943, Eisenhower Presidential Library, Abilene, Kansas.

[7]Johnson, 192-198. American armor doctrine remained essentially unchanged after Kasserine Pass, as evidenced by updated field manuals issued in September 1943 that reaffirmed the exploitation role of the armored division. In April 1944, General Patton wrote, "The primary mission of armored units is the attacking of infantry and artillery. The enemy's rear is the happy hunting ground for armor." This continued insistence that the Sherman was not intended to fight enemy tanks--clearly contradicted by combat experience in Tunisia--combined with concerns about the logistics of shipping heavy tanks across the Atlantic, caused Eisenhower and the War Department to argue that it was unnecessary and impractical to increase the gun caliber and armor thickness of American tanks.

[8]Ibid., 199.

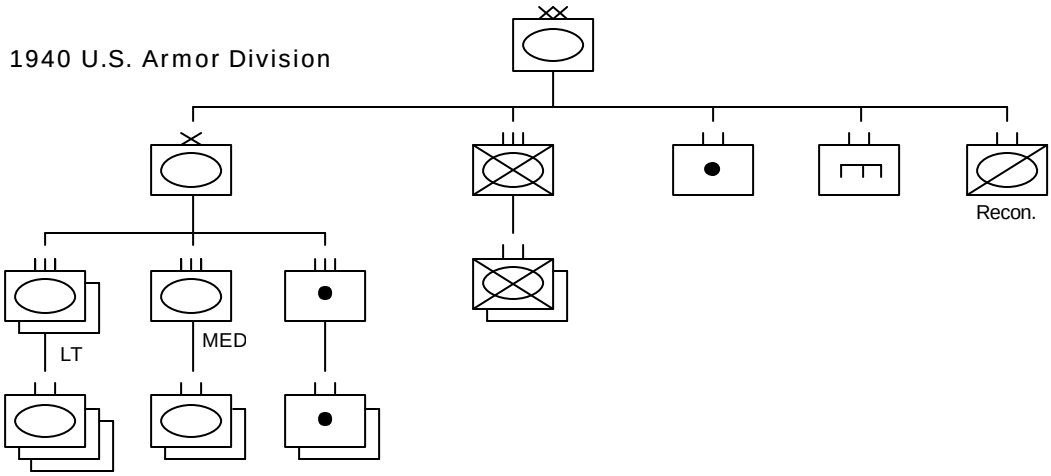

Fig. 1. 1940 US Armored Division. Reprinted from Christopher R. Gabel, *The U.S. Army GHQ Maneuvers of 1941* (Washington, DC: Office of the Chief of Military History, 1991), 25.

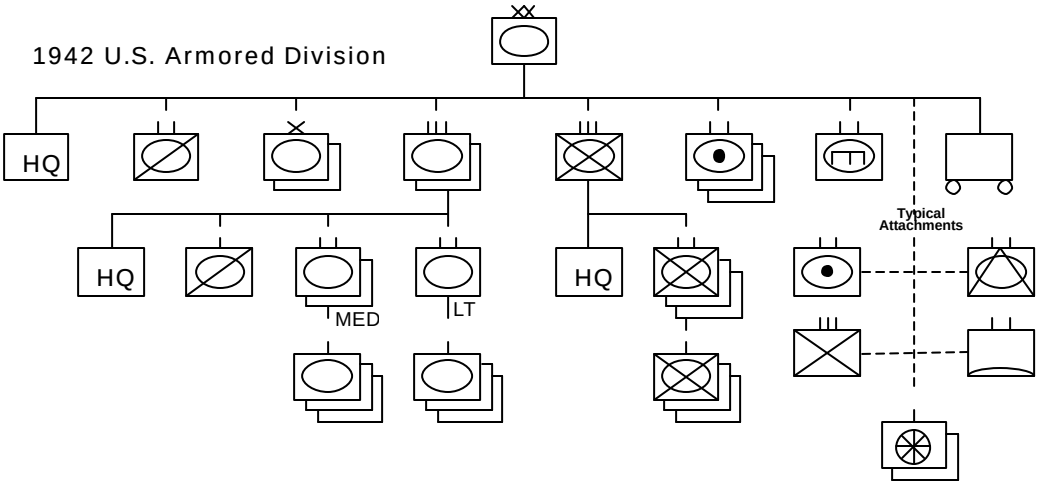

Fig. 2. 1942 US Armored Division. Reprinted from Jonathan M. House, *Toward Combined Arms Warfare: A survey of 20th Century Tactics, Doctrine and Organization* (Fort Leavenworth, KS: Combat Studies Institute Research Survey No. 2, 1984), 109.

Specifications:

Crew:	4
Length:	178.4 inches
Width:	88 inches
Height:	104 inches
Weight:	28,000 pounds (combat loaded)
Hull Thickness:	
Front	0.625-1.75 inches
Sides	1 inch
Rear	1 inch
Turret Thickness:	
Front	1.5 inches
Sides	1 inch
Rear	1 inch
Armament:	37-millimeter M5 main gun, 30 rounds per minute
Engine:	Continental W-670-9A, 7 cylinder, 4 cycle, radial, gasoline
Maximum Speed	36 miles per hour

Fig. 3. M3A1 Stuart Light Tank. Reprinted, by permission, from: Scott Brady, "World War II Vehicles," [personal photograph library]; available from http://www.wwiivehicles.com/index; Internet; accessed 10 December 2002. Specifications from R. P. Hunnicutt, *Stuart: A History of the American Light Tank* (Novato, CA: Presidio Press, 1992), 476.

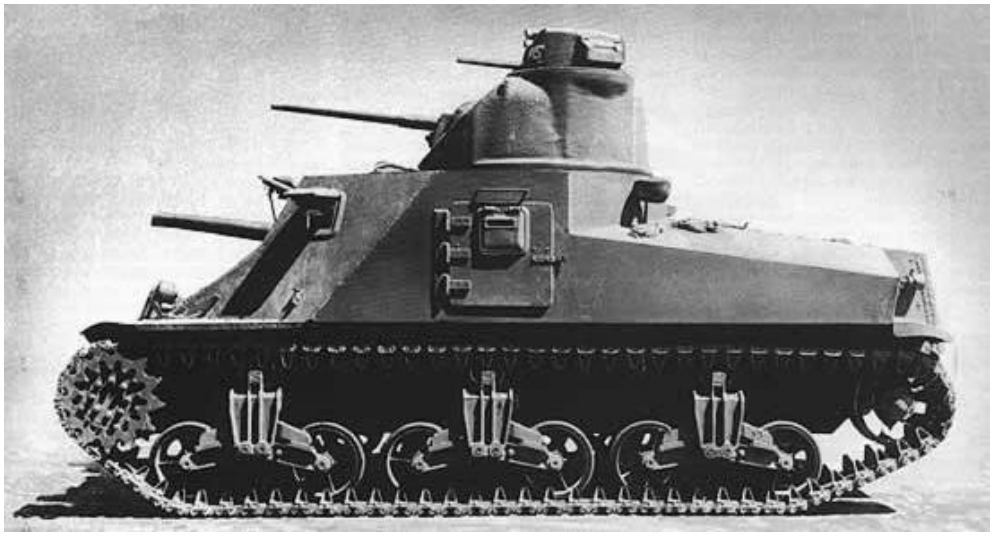

Specifications:	
Crew:	6 or 7
Length:	222-241 inches
Width:	107 inches
Height:	123 inches
Weight:	63,000 pounds (combat loaded)
Hull Thickness:	
Front	1.5-2 inches
Sides	1.5 inch
Rear	1.5 inch
Turret Thickness:	
Front	2 inches
Sides	2 inches
Rear	2 inches
Armament:	75-millimeter M2 or M3 main gun, 30 rounds per minute
Engine:	General Motors 6046, 12 cylinder, 2 cycle, twin in-line, diesel
Maximum Speed	25 miles per hour (sustained)

Fig. 4. M3A3 General Lee Medium Tank. Reprinted, by permission, from: Scott Brady, "World War II Vehicles," [personal photograph library]; available from http://www.wwiivehicles.com/index; Internet; accessed 10 December 2002. Specifications from R. P. Hunnicutt, *Sherman: A History of the American Medium Tank* (Novato, CA: Presidio Press, 1978), 532.

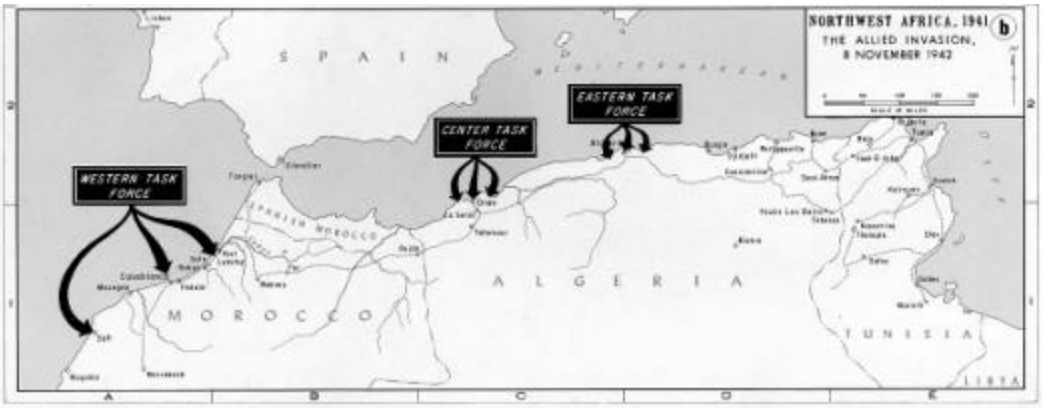

Fig. 5. Map 1, Operation Torch. Reprinted from *Atlas of The Second World War: Europe and the Mediterranean* [book on-line] (Wayne, NJ: Avery Publishing Group, Inc., 1985, accessed 10 December 2002); available from http://www.dean.usma.edu/history; Internet.

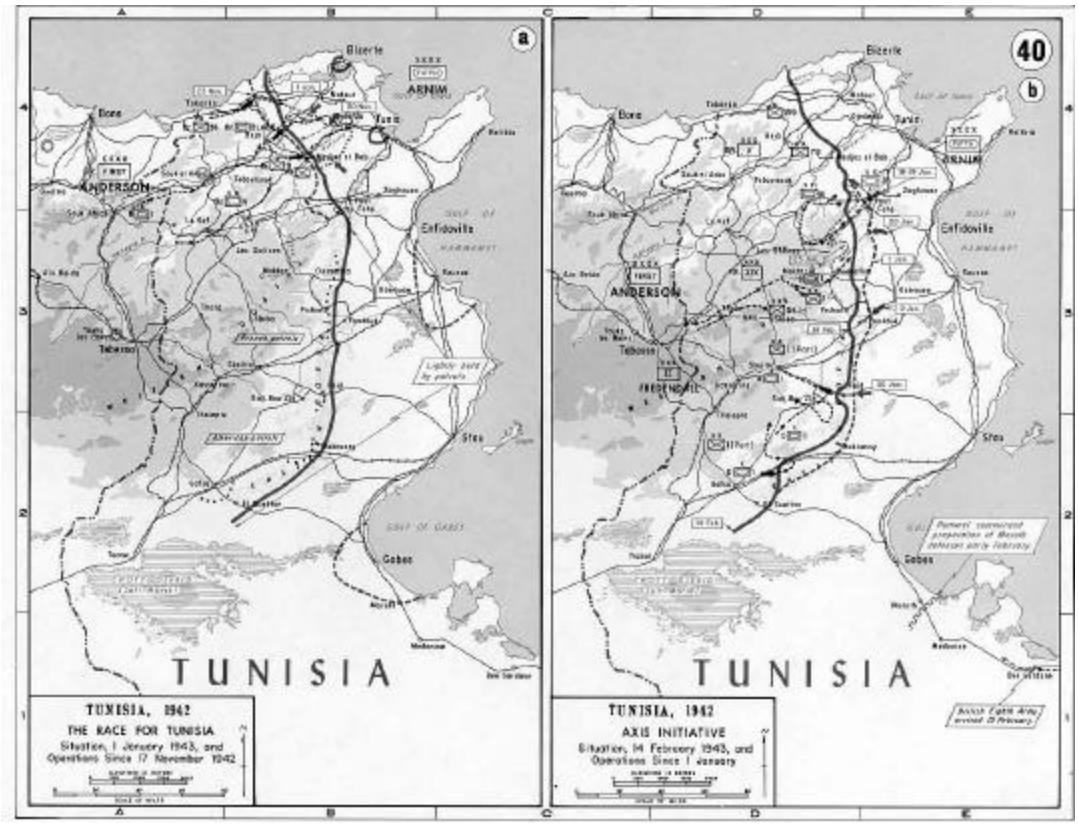

Fig. 6. Map 2, Race for Tunisia and Axis Initiative. Reprinted from *Atlas of The Second World War: Europe and the Mediterranean* [book on-line] (Wayne, NJ: Avery Publishing Group, Inc., 1985, accessed 10 December 2002); available from http://www.dean.usma.edu/history; Internet.

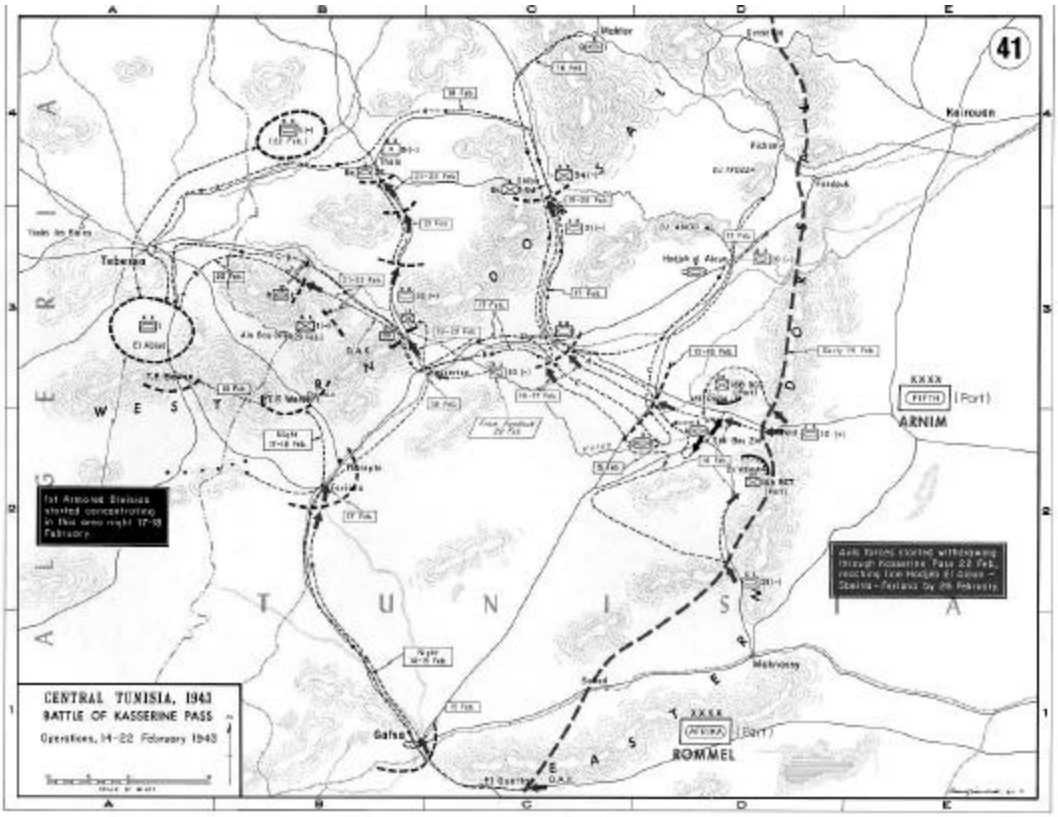

Fig. 7. Map 3, Kasserine Pass. Reprinted from *Atlas of The Second World War: Europe and the Mediterranean* [book on-line] (Wayne, NJ: Avery Publishing Group, Inc., 1985, accessed 10 December 2002); available from http://www.dean.usma.edu/history; Internet.

GLOSSARY

Brew-Ups. A British nickname for the Sherman tank, earned by the Sherman's propensity to catch fire when hit by enemy shells. The Sherman was gasoline powered, and the Germans quickly learned a well-placed shot would cause the Sherman's highly flammable fuel to ignite.

Ronson. Another British nickname for the Sherman.

Wadi. A dry streambed often found in desert terrain, usually three to six feet high and up to twenty feet wide. These streambeds made excellent cover and concealment terrain for tanks, essentially allowing them to assume defilade positions without the need for engineer support to dig them in.

BIBLIOGRAPHY

Books

Atkinson, Rick. *An Army at Dawn.* New York, NY: Henry Holt & Company, 2002.

Bierman, John, and Colin Smith. *The Battle of Alamein.* New York, NY: Viking Penguin, 2002.

Blumenson, Martin. *Kasserine Pass.* New York, NY: Cooper Square Press, 2000.

Coggins, Jack. *The Campaign for North Africa.* Garden City, NY: Doubleday, 1980.

Greenfield, Kent Roberts, Robert R. Palmer, and Bell I. Wiley. *The Organization of Ground Combat Troops.* US Army in World War II: The Army Ground Forces. Washington, DC: Department of the Army Historical Division, 1947.

Howe, George F. *Northwest Africa: Seizing the Initiative in the West.* US Army in World War II: The Mediterranean Theater of Operations. Washington, DC: Department of the Army, Office of the Chief of Military History, 1957.

_____. *The Battle History of the 1st Armored Division.* Washington, DC: Combat Forces Press, 1954.

Hunnicutt, R. P. *Stuart: A History of the American Light Tank.* Novato, CA: Presidio Press, 1992.

_____ *Sherman: A History of the American Medium Tank.* Novato, CA: Presidio Press, 1978.

Johnson, David E. *Fast Tanks and Heavy Bombers.* Ithaca, NY: Cornell University Press, 1998.

Kelly, Orr. *Meeting the Fox.* New York, NY: John Wiley & Sons, 2002.

Moorehead, Alan. *Desert War.* New York, NY: Penguin Books, 2001.

Perrett, Bryan. *Allied Tanks North Africa World War Two.* London: Arms & Armour Press, Ltd., 1986.

Robinett, Paul M. Brigadier General. *Armor Command.* Washington, DC: McGregor & Werner Inc., 1958.

Rolf, David. *The Bloody Road to Tunis.* Mechanicsburg, PA: Stackpole Books, 2001.

Diary

Butcher, Harry C. Lieutenant Commander. (Naval Aide to Major General Eisenhower). "War Diaries." Harry C. Butcher Papers, Eisenhower Presidential Library, Abilene, Kansas.

Periodicals

Rife, Shawn P. "Kasserine Pass and the Proper Application of Airpower." *Joint Forces Quarterly* 20 (autumn/winter 1998-99): 71-77.

Katzenbach Jr., Edward L. "The Horse Cavalry in the Twentieth Century." *Public Policy 7* (1958): 120-49. Quoted in David E. Johnson, *Fast Tanks and Heavy Bombers*, 13. Ithaca, NY: Cornell University Press, 1998.

Letters

Eisenhower, Dwight D. Lieutenant General to Major General Thomas T. Handy, 7 December 1942. Harry C. Butcher Papers, Eisenhower Presidential Library, Abilene, Kansas.

Eisenhower, Dwight D. Lieutenant General to General George C. Marshall, 21 February 1943. Harry C. Butcher Papers, Eisenhower Presidential Library, Abilene, Kansas.

Roosevelt, Theodore "Ted" Jr. Brigadier General to Eleanor Roosevelt, March 1943. Theodore Roosevelt III Papers, Box 9, Library of Congress, Washington, DC. Quoted in Rick Atkinson, *An Army at Dawn*, 403. New York, NY: Henry Holt & Company, 2002.

Webb, James R. Captain (aide to Major General Lloyd R. Fredendall), his Mother, 20 April 1943. James R. Webb Collection, Eisenhower Presidential Library, Abilene, Kansas.

Webb, James R. Captain (aide to Major General Lloyd R. Fredendall) to Editor, Saturday Evening Post, date unknown. James R. Webb Collection, Eisenhower Presidential Library, Abilene, Kansas.

Internet

Brady, Scott. "World War II Vehicles." [Personal photograph library]. Available from http://www.wwiivehicles.com/index. Internet. Accessed 10 December 2002.

United States Military Academy. Department of History. *Atlas of The Second World War: Europe and the Mediterranean.* [Book on-line]. Wayne, NJ: Avery Publishing Group, Inc., 1985, accessed 10 December 2002. Available from http://www.dean.usma.edu/history. Internet.

Government Documents

Anderson, Kenneth A. Lieutenant General. Report to Major General Eisenhower, 8 December 1942. Harry C. Butcher Papers, Eisenhower Presidential Library, Abilene, Kansas.

Berlin, Robert H. *US Army World War II Corps Commanders: A Composite Biography*. Combat Studies Institute, US Army Command and General Staff College, Fort Leavenworth, KS, 1989.

Daubin, Freeland A. Jr. Captain "The Battle of Happy Valley." Military Monograph, The Armored School, Fort Knox, KY, 1948.

Eisenhower, Dwight D. Lieutenant General. Message to the Combined Chiefs of Staff, 15 February 1943. Harry C. Butcher Papers, Eisenhower Presidential Library, Abilene, Kansas.

Eisenhower, Dwight D. Lieutenant General. Message to Major General Fredendall, 22 February 1943. Harry C. Butcher Papers, Eisenhower Presidential Library, Abilene, Kansas.

Eisenhower, Dwight D. Lieutenant General. Message to General Marshall, 25 February 1943. Harry C. Butcher Papers, Eisenhower Presidential Library, Abilene, Kansas.

Eisenhower, Dwight D. Lieutenant General. Message to General Marshall, 4 March 1943. Harry C. Butcher Papers, Eisenhower Presidential Library, Abilene, Kansas.

Eisenhower, Dwight D. Lieutenant General. Instructions to Major General Patton upon Assuming Command of II Corps, 4 March 1943. Harry C. Butcher Papers, Eisenhower Presidential Library, Abilene, Kansas.

Fredendall, Lloyd R. Major General. "Notes on Recent Operations on the Tunisian Front, 10 March 1943." James R. Webb Collection, Eisenhower Presidential Library, Abilene, Kansas.

Fuller, J. F. C. *Lectures on F. S. R. III.* Combat Studies Institute Reprint, US Army Command and General Staff College, Fort Leavenworth, KS, 1982.

Gabel, Christopher R. *Seek, Strike and Destroy: US Army Tank Destroyer Doctrine in World War II*. Leavenworth Paper 12, Combat Studies Institute, US Army Command and General Staff College, Fort Leavenworth, KS, 1985.

_____. *The US Army GHQ Maneuvers of 1941.* Washington, DC: Office of The Chief of Military History, Department of the Army, 1991.

Harmon, E. N. “Notes on Combat Experience During the Tunisian and African Campaigns.” Typescript, Library, US Army Armor School, Fort Knox, KY.

Headquarters, Armored Command. *Tankers in Tunisia.* Fort Knox, KY: Military History Institute, 1943.

House, Jonathan M. *Toward Combined Arms Warfare: A Survey of 20th Century Tactics, Doctrine and Organization* Research Survey No. 2, Combat Studies Institute, US Army Command and General Staff College, Fort Leavenworth, KS, 1984.

US Army. Center of Military History. *Kasserine Pass Battles.* 1st Armored Division Staff Ride in Tunisia. Washington, DC: Office of The Chief of Military History, Department of the Army, 1993.

US Army. First Armored Division. Historical Record. 1 March 1943. Combined Arms Research Library, Fort Leavenworth, Kansas.

US Army. Ground Forces Observer Report 29 March 1943. Combined Arms Research Library, Fort Leavenworth, Kansas.

US Army. Ground Forces Board. Mediterranean Theater of Operations. “Combat Lessons.” Report A-180. 21 Aug 44. Combined Arms Research Library, Fort Leavenworth, Kansas.

US Army. Headquarters, Combat Command B. “Report of Ousseltia Valley Campaign, 19 to 29 January 43.” Record group 407, entry 427, National Archives and Records Administration, College Park, MD. Quoted in Rick Atkinson, *An Army at Dawn*, 403. New York, NY: Henry Holt & Company, 2002.

_____. Operations Report Sbeitla Area. 15 Feb 43 to 18 Feb 43. Combined Arms Research Library, Fort Leavenworth, Kansas.

_____. Operations Report Bahiret Foussana Valley. 20 Feb 43 to 25 Feb 43. Combined Arms Research Library, Fort Leavenworth, Kansas.

_____. Operations Report Maknassey Valley. 16 Mar 43 to 11 Apr 43. Combined Arms Research Library, Fort Leavenworth, Kansas.

_____. Reports on Combat Experience and Battle Lessons for Training Purposes. 10 June 1943. Combined Arms Research Library, Fort Leavenworth, Kansas.

US Army. Headquarters, Combat Command C. Historical Record of Battle Operations of Combat Command C. 23 January 1943. Combined Arms Research Library, Fort Leavenworth, Kansas.

US Army. Headquarters, First Armored Regiment. Reports on Combat Experience and Battle Lessons for Training Purposes. 9 June 1943. Eisenhower Presidential Library, Abilene, Kansas.

US Army. Headquarters, Thirteenth Armored Regiment. Lessons Learned in Tunisian Campaign. 8 June 1943. Eisenhower Presidential Library, Abilene, Kansas.

US War Department. FM 17-10, *Armored Force Field Manual: Tactics and Techniques*. Washington, DC: US Government Printing Office, 1942.

_____. FM 17-22, *Armored Force Field Manual: Reconnaissance Battalion*. Washington, DC: US Government Printing Office, 1942.

_____. FM 17-30, *Armored Force Field Manual: Tank Platoon*. Washington, DC: US Government Printing Office, 1942.

_____. FM 17-32, *Armored Force Field Manual: The Tank Company, Light and Medium*. Washington, DC: US Government Printing Office, 1942.

_____. FM 17-33, *Armored Force Field Manual: The Armored Battalion, Light and Medium*. Washington, DC: US Government Printing Office, 1942.

_____. FM 100-5, *Field Service Regulations: Operations*. Washington, DC: US Government Printing Office, 1941.

_____. FM 100-15, *Field Service Regulations: Larger Units*. Washington, DC: US Government Printing Office, 1942.

_____. Training Circular No. 31, Employment of Larger Units. Washington, DC: US Government Printing Office, 1942.

Webb, James R. Captain (aide to Major General Lloyd R. Fredendall). "Diary Covering the Activities of General Fredendall & Supporting Players, December '42 – March '43." James R. Webb Collection, Eisenhower Presidential Library, Abilene, Kansas.

INITIAL DISTRIBUTION LIST

Combined Arms Research Library
U.S. Army Command and General Staff College
250 Gibbon Ave.
Fort Leavenworth, KS 66027-2314

Defense Technical Information Center/OCA
825 John J. Kingman Rd., Suite 944
Fort Belvoir, VA 22060-6218

Dr. Christopher R. Gabel
Combat Studies Institute
USACGSC
1 Reynolds Ave.
Fort Leavenworth, KS 66027-1352

Lieutenant Colonel Marlyn R. Pierce
Combat Studies Institute
USACGSC
1 Reynolds Ave.
Fort Leavenworth, KS 66027-1352

CERTIFICATION FOR MMAS DISTRIBUTION STATEMENT

1. Certification Date: 6 June 2003

2. Thesis Author: Major Mark T. Calhoun

3. Thesis Title: Defeat at Kasserine: American Armor Doctrine, Training and Battle Command in Northwest Africa, World War II.

4. Thesis Committee Members: Christopher R. Gabel, Ph.D.

Lieutenant Colonel Marlyn R. Pierce

Signatures: _____

_____

5. Distribution Statement: See distribution statements A-X on reverse, then circle appropriate distribution statement letter code below:

(A) B C D E F X SEE EXPLANATION OF CODES ON REVERSE

If your thesis does not fit into any of the above categories or is classified, you must coordinate with the classified section at CARL.

6. Justification: Justification is required for any distribution other than described in Distribution Statement A. All or part of a thesis may justify distribution limitation. See limitation justification statements 1-10 on reverse, then list, below, the statement(s) that applies (apply) to your thesis and corresponding chapters/sections and pages. Follow sample format shown below:

EXAMPLE

Limitation Justification Statement	/	Chapter/Section	/	Page(s)
Direct Military Support (10)	/	Chapter 3	/	12
Critical Technology (3)	/	Section 4	/	31
Administrative Operational Use (7)	/	Chapter 2	/	13-32

Fill in limitation justification for your thesis below:

Limitation Justification Statement	/	Chapter/Section	/	Page(s)
	/		/	
	/		/	
	/		/	
	/		/	
	/		/	

7. MMAS Thesis Author's Signature: _____

STATEMENT A: Approved for public release; distribution is unlimited. (Documents with this statement may be made available or sold to the general public and foreign nationals).

STATEMENT B: Distribution authorized to U.S. Government agencies only (insert reason and date ON REVERSE OF THIS FORM). Currently used reasons for imposing this statement include the following:

1. Foreign Government Information. Protection of foreign information.

2. Proprietary Information. Protection of proprietary information not owned by the U.S. Government.

3. Critical Technology. Protection and control of critical technology including technical data with potential military application.

4. Test and Evaluation. Protection of test and evaluation of commercial production or military hardware.

5. Contractor Performance Evaluation. Protection of information involving contractor performance evaluation.

6. Premature Dissemination. Protection of information involving systems or hardware from premature dissemination.

7. Administrative/Operational Use. Protection of information restricted to official use or for administrative or operational purposes.

8. Software Documentation. Protection of software documentation - release only in accordance with the provisions of DoD Instruction 7930.2.

9. Specific Authority. Protection of information required by a specific authority.

10. Direct Military Support. To protect export-controlled technical data of such military significance that release for purposes other than direct support of DoD-approved activities may jeopardize a U.S. military advantage.

STATEMENT C: Distribution authorized to U.S. Government agencies and their contractors: (REASON AND DATE). Currently most used reasons are 1, 3, 7, 8, and 9 above.

STATEMENT D: Distribution authorized to DoD and U.S. DoD contractors only; (REASON AND DATE). Currently most reasons are 1, 3, 7, 8, and 9 above.

STATEMENT E: Distribution authorized to DoD only; (REASON AND DATE). Currently most used reasons are 1, 2, 3, 4, 5, 6, 7, 8, 9, and 10.

STATEMENT F: Further dissemination only as directed by (controlling DoD office and date), or higher DoD authority. Used when the DoD originator determines that information is subject to special dissemination limitation specified by paragraph 4-505, DoD 5200.1-R.

STATEMENT X: Distribution authorized to U.S. Government agencies and private individuals of enterprises eligible to obtain export-controlled technical data in accordance with DoD Directive 5230.25; (date). Controlling DoD office is (insert).