REPORT DOCUMENTATION PAGE

Form Approved
OMB No. 0704-0188

Public reporting burden for this collection of information is estimated to average 1 hour per response, including the time for reviewing instructions, searching existing data sources, gathering and maintaining the data needed, and completing and reviewing the collection of information. Send comments regarding this burden estimate or any other aspect of this collection of information, including suggestions for reducing this burden, to Washington Headquarters Services, Directorate for Information Operations and Reports, 1215 Jefferson Davis Highway, Suite 1204, Arlington, VA 22202-4302, and to the Office of Management and Budget, Paperwork Reduction Project (0704-0188), Washington, DC 20503.

1. AGENCY USE ONLY *(Leave blank)*	2. REPORT DATE	3. REPORT TYPE AND DATES COVERED
	5.Sep.02	THESIS

4. TITLE AND SUBTITLE
PRECISION GUIDED MUNITIONS: CONSTRUCTING A BOMB MORE POTENT THAN THE A-BOMB

5. FUNDING NUMBERS

6. AUTHOR(S)
MAJ GILLESPIE PAUL G

7. PERFORMING ORGANIZATION NAME(S) AND ADDRESS(ES)
LEHIGH UNIVERSITY

8. PERFORMING ORGANIZATION REPORT NUMBER
CI02-514

9. SPONSORING/MONITORING AGENCY NAME(S) AND ADDRESS(ES)
THE DEPARTMENT OF THE AIR FORCE
AFIT/CIA, BLDG 125
2950 P STREET
WPAFB OH 45433

10. SPONSORING/MONITORING AGENCY REPORT NUMBER

11. SUPPLEMENTARY NOTES

12a. DISTRIBUTION AVAILABILITY STATEMENT
Unlimited distribution
In Accordance With AFI 35-205/AFIT Sup 1

12b. DISTRIBUTION CODE

13. ABSTRACT *(Maximum 200 words)*

DISTRIBUTION STATEMENT A
Approved for Public Release
Distribution Unlimited

20021015 105

14. SUBJECT TERMS

15. NUMBER OF PAGES
273

16. PRICE CODE

17. SECURITY CLASSIFICATION OF REPORT	18. SECURITY CLASSIFICATION OF THIS PAGE	19. SECURITY CLASSIFICATION OF ABSTRACT	20. LIMITATION OF ABSTRACT

THE VIEWS EXPRESSED IN THIS ARTICLE ARE THOSE OF THE AUTHOR AND DO NOT REFLECT THE OFFICIAL POLICY OR POSITION OF THE UNITED STATES, DEPARTMENT OF DEFENSE, OR THE U.S. GOVERNMENT

Precision Guided Munitions:
Constructing a Bomb More Potent than the A-bomb

by

Paul G. Gillespie

A Dissertation

Presented to the Graduate and Research Committee

of Lehigh University

in Candidacy for the Degree of

Doctor of Philosophy

in

History

Lehigh University

June 2002

APPROVED AND RECOMMENDED FOR ACCEPTANCE AS A DISSERTATION IN PARTIAL FULFILLMENT OF THE REQUIREMENTS FOR THE DEGREE OF DOCTOR OF PHILOSOPHY.

23 April 2002
DATE

DISSERTATION DIRECTOR

24 April 2002
ACCEPTED DATE

COMMITTEE MEMBERS

JOHN K. SMITH COMMITTEE CHAIR

ROGER D. SIMON

JAMES S. SAEGER

STEPHEN H. CUTCLIFFE

TODD A. WATKINS

Acknowledgements

I wish to thank the many people who helped make this dissertation a reality. I owe a special thanks to Brigadier General Carl Reddel and Colonel Mark Wells, the Air Force Academy history department heads who believed in me, and gave me the opportunity to pursue a lifelong dream at Lehigh University, under Air Force sponsorship.

Throughout my graduate program I was shown every kindness and given phenomenal support and encouragement by the Lehigh faculty. I owe a tremendous debt to the entire history department, but especially Professors John Smith, Stephen Cutcliffe, James Saeger, Roger Simon, and Gail Cooper, who gave of their time and talents not only to teach me history, but to help me transition from student to professional historian.

For making my archival visits productive and rewarding experiences, I wish to specifically thank three highly competent, professional archivists: Yvonne Kinkaid of the Air Force History Support Office in Washington D.C., Joe Caver of the Air Force Historical Research Agency in Alabama, and Jim Elkins of the Munitions Directorate Technical Library in Florida. Of course, the core of my story could not have been told without the cooperation of several key individuals from Texas Instruments. I thank Sheryl Baxter, the TI archivist who gleaned for me important documents on the original laser guided bomb project from long-buried files. And, I owe a special debt of gratitude to Weldon Word, the engineer who led this groundbreaking project—his recollections and insights, together with the corroborative correspondence of his colleagues, Steve Roemerman, Bob Wagner, Ben Ford, and Fred Clark, proved indispensable.

Others contributed to this work less directly. Shelby Spires was kind enough to share with me transcripts of his interviews with the pioneers of laser guidance, and Dean Failor, one of the first Air Force flyers to drop laser guided bombs, provided invaluable operational details. For offering useful commentary and early encouragement of this project, I thank Hans Joachim Braun and Bart Hacker of the Society for the History of Technology. Finally, for understanding that dads sometimes have homework too, I express my love and appreciation to my children: [redacted]

This dissertation is dedicated to Clinton and Scott Gillespie—practitioners of the fine art of dropping bombs precisely. President John F. Kennedy once observed that "In the long history of the world, only a few generations have been granted the role of defending freedom in its hour of maximum danger." My father and big brother belong to two such generations. That Americans continue to enjoy unparalleled freedoms today is thanks, in no small part, to their unselfish decision not to "shrink from this responsibility." And, finally, to Yvonne Gillespie, who made this whole endeavor not only possible, but worthwhile and enjoyable.

The views expressed in this dissertation are those of the author and do not reflect the official policy or position of the United States Air Force, Department of Defense, or the U.S. Government.

Table of Contents

Acknowledgements	iii
List of Figures	v
Abstract	1
1. Introduction	2
2. The Roots of Precision Guidance	18
3. Air Power in the Aftermath of World War II	63
4. Making Pinpoint Accuracy a Reality	102
5. Vietnam: Precision Guided Munitions Come of Age	143
6. The Aftermath of Vietnam: Gulf War and Peacekeeping	181
7. Policy Implications	213
8. Conclusion	245
Bibliography	261
Candidate Curriculum Vitae	273

List of Figures

Bridge in Burma Destroyed by Azon	56
German FX-1400 "Fritz-X" Guided Bombs	58
Lacrosse Close Air Support Guided Missile	72
Guided Missile Cartoon	80
Razon Guided Bomb	82
Tarzon-style Ring Shroud	85
Aerodynamically Stabilized Seeker Head	124
Concept Diagram of Laser Guided Bomb	125
Original Laser Guided Bomb Configuration	126
M-117 Guided Bomb Configuration	127
Guidance Computer Block Diagram	128
Autonetics Laser Guided Bomb	137
F-4 Cockpit Laser Illuminator	162
Mark 84 Guided Bomb Configuration	164
Paul Doumer Bridge	171
Thanh Hoa Bridge	172
Lang Chi Hydroelectric Power Plant	175
Paveway Bomb Commonality	191
Paveway II Bomb Versus Truck	193
Paveway II in the Falklands	195

List of Figures (Continued)

TV-Guided GBU-15 Direct Hit	199
Cutaway of Rocket-Boosted, TV-Guided AGM-130 Missile	200
Paveway III Bombs with Stealth Fighter	201
Laser Guided GBU-28 Hard Target Penetrating Bomb	207
Joint Direct Attack Munition and Joint Stand-Off Weapon	211
Humorous Internet Circular Featuring Stealth Fighters	237
Predator Unmanned Aerial Vehicle with Hellfire Missile	242
Author and Subject	272

Abstract

This study examines the history of an emergent class of weapons known collectively as precision guided munitions (PGMs). Arising from historical antecedents in the First and Second World Wars, the specific technologies that made precision guidance a reality in the late 1960s were, nevertheless, the unique product of concerted actions taken within the U.S. military, the federal government, and civilian industry. Precision weapons did not emerge as a natural consequence of technological change, but were consciously constructed in response to the purposes, ethics, and values of American society. Certainly the creation of important enabling technologies, notably lasers and semiconductor integrated circuits, played a decisive role in the development of these advanced weapons. However, the emergence of guided weapons is inexplicable without also considering America's evolving defense policy; the military doctrine that translated that policy into specific weapon systems; and twentieth-century wartime demand, which stimulated research and development by providing added urgency, requirements, and resources. Entering America's arsenal at the height of cold war tensions, PGMs provided an appealing alternative to the largely impotent nuclear bombs and missiles that had become the centerpiece of U.S. military strategy. Post-Vietnam military operations highlighted a marked shift in emphasis away from mass destruction in favor of inflicting precise, controlled damage. Reliance upon this technological innovation has produced a remarkable three-tiered revolutionary transformation in munitions technology, armed conflict, and U.S. national security policy.

1. – Introduction

Why Precision Guided Munitions?

At the dawning of the twenty-first century, one thing humanity is not suffering from is a shortage of brave new technologies. The real challenge for the historian of technology lies not in finding a suitable subject, but in making sense of the exponentially expanding spectrum of technology that has inundated human existence. Examining individual technological innovations may provide valuable historical insight, but only provided that one selects those particular technologies from which broader conclusions might be drawn. In the selection of historical examples, military technology has long been neglected. In his 1990 analysis of trends within the discipline, noted historian of technology John Staudenmaier concluded that, "despite its obvious influence on technical design and funding priorities for research and development, the relationship between technology and the military remains a relatively underdeveloped research area."[1] This unfortunate trend, not unlike a similar tendency among scholars of American history, perhaps stems from the erroneous conclusion that warfare and related military affairs have played a more or less uniform role in Western civilization, and can therefore justifiably be consigned to those specializing in military history. However, given the prominent role warfare has played even in the United States of America, a country that has historically leaned toward isolationism and away from militarism, and the truism that wars, as national and cultural fights for sheer survival, "offer the most telling insights

[1]John M. Staudenmaier, "Recent Trends in History of Technology," *American Historical Review* 95 (June 1990): 720.

about the values, technologies, social relations, and intellectual life of historical periods," historians of technology who ignore this important component of their discipline clearly do so to their detriment.[2] This study seeks in part to remedy this deficiency by tackling the issue of military technology head-on.

However, even among military technologies there is no shortage of potential subjects. Limiting oneself to the current U.S. arsenal, the scope and variety of high-tech weaponry is still so wide-ranging, that isolating a decisive technology seems akin to selecting the largest tree in the forest. Why, then, have PGMs been singled out as the subject of this historical study? In order to better demonstrate the relevance of this particular class of weapons, the point of a spear provides a much more apt metaphor than the trees of a forest. If the entire armed forces of a nation are thought of as a spear, logically those personnel and weapons that directly inflict damage upon the enemy equate to the tip, or point of the spear. At first glance this lethal tip might seem to include much, if not all, of a nation's fielded forces. However, in recent decades an increasingly select few persons and technologies have constituted the spear point.

Born in the earliest days of the twentieth century, one technology has come to dominate the battlefield like no other. The prospect of aerial bombardment began to stir controversy and interest even before the Wright brothers first demonstrated powered flight in 1903, but it was not until the First World War that aircraft emerged as a decisive weapon, capable of producing far-reaching effects. Indeed, in summarizing the impact of the fledgling German air arm in the opening moves of that conflict, General Paul von

[2]Robert D. Kaplan, "Four-Star Generalists," *Atlantic Monthly*, October 1999, 18.

Hindenburg flatly stated, "without the airmen, no Tannenberg."[3] During the first half of the twentieth century, the industrialized nations of the world poured vast resources into the development of technologies designed to increase the effectiveness of aerial bombardment, and following World War II, no less a naval enthusiast than Winston Churchill himself was forced to conclude that, "for good or ill, air mastery is today the supreme expression of military power, and fleets and armies, however vital and important, must accept subordinate rank."[4] Particularly in the wake of Hiroshima and Nagasaki, the air force became the indisputable queen of battle, dominating all subsequent twentieth-century conflicts. However, even in the midst of the Cold War it was realized that a nuclear tipped air weapon had severe limitations. And, while a number of technologies were developed in the next half-century to increase air power's effectiveness, including improved cluster bombs, proximity fuses, penetrating warheads, napalm and other incendiaries, and stealth technology, nothing has revolutionized modern warfare in quite the same way as precision guidance. Hearkening back to Hindenberg's observation, today one might justly assert: "without the PGM, no Kuwait or Bosnia."

One indication of the relative importance of precision air weapons is the prominence they have attained in modern military forces. Clearly, air power encompasses a variety of roles and missions, making it difficult to single out one as decisive. However, it should be kept in mind that the vast majority of an air force does not actually fly or fight. For example, in today's United States Air Force, only about three percent of active duty personnel are pilots—the remaining ninety-seven percent provide flyers with the

[3]Lee Kennett, *The First Air War 1914-1918* (New York: The Free Press, 1991), 31.
[4]Donald D. Chipman, "Airpower: A New Way of Warfare," *Airpower Journal* XI (Fall 1997): 68.

communications, supply, maintenance, transportation, security, engineering, intelligence, medical and other support functions that make up the long, non-lethal haft of the spear. Beyond this, most aircraft do not wield bombs or bullets, performing instead such supporting roles as training, airlift, aerial refueling, and reconnaissance.[5] Even critical combat mission areas like air superiority and the suppression of enemy air defenses, as galling as it must sound to the fighter ace, are actually supporting roles. After all, except in the case of a defensive war, of the sort England fought during the Battle of Britain, air-to-air combat serves chiefly to clear a path for the bomb droppers.[6] So, while the very first U.S. Air Force core competency remains Air and Space Superiority, current doctrine admits that this superiority is rarely "an end in itself but is a means to the end of attaining military objectives...it provides freedom to attack as well as freedom from attack." In contrast, the second Air Force core competency, Precision Engagement, supports the premise that air power provides "the 'scalpel' of joint service operations—the ability to forgo the brute force-on-force tactics of previous wars and apply discriminate force precisely where required."[7] Returning to the previously mentioned spearhead analogy, in the final analysis only those combatants and weapon systems capable of efficiently destroying valued enemy assets on the ground equate to the tip of the spear. As Vince Lombardi might phrase it, when it comes to modern warfare, "putting bombs on target isn't everything; it's the only thing."

---

[5]Actual figures are 11,800 pilots in an active force of 355,654 personnel and 1,839 combat aircraft in an inventory of 4,400 according to "USAF Almanac 2001," *Air Force Magazine*, May 2001, 47-55.

[6]See Robert Saundby, *Air Bombardment: The Story of its Development* (New York: Harper & Brothers, 1961), 210-211; despite recent quantification of air forces in terms of "fighter wing equivalents," the bomber has always been the offensive weapon, while the fighter is strategically defensive—as Winston Churchill observed, "the fighters are our salvation, but the bombers alone provide the means of victory."

[7]U.S. Department of Defense, *Air Force Basic Doctrine: Air Force Doctrine Document 1* (Maxwell Air Force Base, Ala.: Air Force Doctrine Center, 1997), 29-30.

Not long ago, nuclear weapons—primarily bombs and missiles, but also torpedoes, mines, and artillery shells—unquestionably constituted the pointiest end of the spear. Not surprisingly, much has been written analyzing this class of weapons, and the strategies and policies that revolved around them. This experience has shown that there is considerable value in writing the history of a dominant weapon—of privileging one particular "winning technology," so to speak—because of what such history reveals about society. This may seem counterintuitive to those in other disciplines, but as one respected historian of technology, Carroll Pursell, observed, "the purposes (ethics and values) of our society are built into the very form and fabric of our technology, and the latter does not exist in some neutral sphere divorced from that purpose."[8] During the past three decades, an entire new class of weapons has emerged. In the process, the nuclear weapons that were once the centerpiece of the U.S. arsenal have been relegated to a minor supporting role, and a potent new family of precision guided munitions has emerged as the linchpin of U.S. national security policy. Eventually, American military and political leaders came to rely upon PGMs as the weapon of first choice, believing them capable of solving a wide variety of problems with minimum risk of casualties or escalation. Thus, this treatment is far more than merely another case study—PGMs now represent the sharpest point of the spear, and consequently provide insight into a crucial nexus in the evolution of American national security policy.

[8]Carroll Pursell, "History of Technology," in *A Guide to the Culture of Science, Technology, and Medicine*, ed. Paul T. Durbin (New York: The Free Press, 1980), 98.

Revolution in Military Affairs

The development and use of technology for military advantage is hardly unique to the American experience. Technology has shaped warfare in important ways since Herodotus first historicized armed conflict in the fifth century B.C. In more recent centuries, such technological innovations as gunpowder, iron ships, and airplanes have played a decisive role in the development of Western warfare. However, following the Industrial Revolution of the nineteenth century, the United States clearly developed a uniquely American way of war—one dependent upon a strategy of annihilation and the efficient employment of technology to defeat its enemies. This unique way of war, built upon the strength of superior numbers and mass production, was epitomized by Ulysses S. Grant in the final phase of the American Civil War. And, while later military planners and leaders stuck with Grant's overall strategy, they continually looked for ways to reduce the cost in lives, frequently turning to more and better technology as the antidote to decrease the bloodshed intrinsic to the strategy of annihilation.

Given America's overall success and eventual superpower status, not surprisingly much historical ink has been spilled analyzing the American way of war.[9] In recent years historians and policy analysts have commenced a lively discourse seeking to explain how new technologies have fundamentally changed the American way of war. For example, writing in 1996, Air Force chief General Ronald Fogleman noted that a new way of war was emerging—one based on technology and air power.[10] In fact, the transformation of warfare during the past two decades has involved much more than a mere shift in

[9]See, for example, Russell F. Weigley, *The American Way of War: A History of United States Military Strategy and Policy* (Bloomington: Indiana University Press, 1973).

[10]Chipman, "Airpower: A New Way of Warfare," 57.

American strategy—it has, arguably, amounted to nothing less than a revolution. Writing about likely future developments in military technique in the 1980s, Russian analysts coined the term "military-technical revolution" to identify those eras in which fundamental transformations of warfare took place. There have, arguably, been four such instances since the Industrial Revolution of the early 1800s: prior to the American Civil War, railroads, telegraphs, ironclads, rifled muskets, and artillery dramatically altered conflict; before World War I, the machine gun, airplane, submarine, and dreadnought dramatically transformed the nature of warfare; during the interwar period improved internal combustion engines, aircraft design, aircraft carriers, radio, and radar once again changed the nature of conflict; and finally, in mid-century, nuclear weapons and their mating with ballistic missiles produced a fundamental change in the nature of warfare.[11] Embracing this model in the early 1990s, Defense Department analysts postulated that another such revolution was just beginning, predicated on the maturing technologies of precision guided munitions, satellite networks, and other computer-age innovations.

More recently, the term "revolution in military affairs" (RMA) has emerged as a favorite buzzword among academics interested in defense affairs. In fact, the last ten years have seen a rush by military historians to "examine virtually everything from the strategy of Edward III to *Blitzkrieg* operations in the light of what we call *revolutions in military affairs*."[12] However, while historians debate the complexities and ambiguities of an historical record that is not yet settled, American policymakers appear to have

---

[11]Andrew F. Krepinevich Jr., "The Military-Technical Revolution: A Preliminary Assessment," *Military Studies* (Maxwell Air Force Base, Ala.: Air Command and Staff College, 1992), 24-26.

[12]Williamson Murray, "Thinking About Revolutions in Military Affairs," *Joint Forces Quarterly* 16 (Summer 1997): 32.

accepted and embraced the current RMA. In many ways indistinguishable from a military-technical revolution, the RMA underway has been described as "the use of computers and knowledge management systems to improve battlefield command and control; the development of precision-guided conventional weapons; and the deployment of stealth systems ... which reduced risk for American combatants."[13] From all accounts, today's technologically-induced revolution has produced an entirely new American way of war—one that can be summed up in six words: "quick decisive victories with minimum casualties." While numerous specific technologies have been cited in conjunction with the ongoing revolutionary changes in warfare, the key elements of the revolution in military affairs have been reducing risks to friendly personnel and reducing diplomatically costly forms of collateral damage to enemies.[14] Therefore, if RMA has transformed the American way of war, as some have argued, there can be no doubt that precision guided munitions are the *sine qua non* of this new way of war.

This dissertation will examine not only the historical development of an important class of weapons, but also the tremendous implications they have had, and will no doubt continue to have, for national security policy. In the process of detailing the historical development of precision weapons, this study will, thus, address several themes relating to their ultimate impact. Some social scientists have argued that precision guided munitions are epiphenomenal—merely the result of the phenomenon of casualty aversion. In contrast, this work will attempt to identify a more complex causality; one in which the avoidance of bloodshed is an important, but secondary, factor in the

[13]Michael Ignatieff, "The New American Way of War," *New York Review of Books,* 20 July 2000, 42.
[14]Ibid.

development and wholesale adoption of this crucial technology. In fact, it will be demonstrated that PGMs have proven revolutionary in a number of ways, bringing about what Thomas Kuhn would certainly have characterized as paradigm changes on at least three distinct levels.[15] In addition, because this study contends that PGMs have affected national security policy in significant ways, it will be useful to evaluate what they have achieved militarily, and whether or not American policymakers have perhaps overestimated what PGMs can accomplish for them strategically and politically. Drawing such themes out of the story will, it is hoped, provide valuable insight into how people perceive and cope with technological change more generally.

Another underlying purpose of this study will be to shed light on the sources of technological innovation. Specifically, it will investigate what forces, prior discoveries, and contemporary contributions made pinpoint bombing technologically feasible in the mid-1960s, but clearly not in the 1940s or 1950s. As historian Arnold Pacey has noted, invention is a social process, and it is misleading to present it as the achievement of individual genius.[16] A number of key individuals did play prominent roles in the development of PGMs, but much like Pacey's printing example, the social process which led to the "invention" of the first laser guided bomb consisted partly in the development of earlier forms of guided weapons and partly in the numerous experiments being carried out contemporaneously. The creation of PGMs thus conforms to George Basalla's theory of technological evolution, since novel artifacts clearly arose from antecedent artifacts.

---

[15]The Kuhnian concepts of revolution and paradigm change will be explained in greater detail in chapter 4—for reference, see Thomas S. Kuhn, *The Structure of Scientific Revolutions*, 1962, 2nd ed. (Chicago: University of Chicago Press, 1970), viii, 10.

[16]Arnold Pacey, *The Maze of Ingenuity: Ideas and Idealism in the Development of Technology* (New York: Holmes & Meier Publishers, 1975), 89.

What makes the case of PGMs instructive is the source of that novelty. Although many of the necessary antecedents, including laser and computer technologies, were available by the early 1960s, it took America's experience in Vietnam to produce a research agenda that purposefully sought technological solutions to achieve specific goals. Once engineers at Texas Instruments broke the bottlenecks that had limited technological progress, and consequently the effectiveness of air power, the result was a three-tiered revolutionary transformation in munitions guidance, armed conflict, and defense policy.[17]

Overview and Organization

The quest for precision bombardment has occupied the American military for a long time. Perhaps the best single-volume treatment of this subject is Stephen L. McFarland's *America's Pursuit of Precision Bombing, 1910-1945*. In the foreword to this definitive work, Air Force Historian Richard Hallion nevertheless noted that the subject of "the post-Second World War development of the precision weapons and precision navigational technologies now embedded in the military capabilities of advanced nations is one that richly deserves its own book."[18] Indeed, while the far-reaching, even revolutionary, implications of PGMs were recognized and debated almost immediately following their debut in Vietnam, and despite a plethora of published articles on the subject, a comprehensive historical treatment of this important class of weapons has until now gone unwritten. The uniqueness of this project is its focus on the historical

[17]I have chosen to adopt David Mowery and Nathan Rosenberg's "bottleneck" model here, as I find it less cumbersome than Thomas Hughes' parallel concept of "reverse salients." See David C. Mowery and Nathan Rosenberg, *Paths of Innovation: Technological Change in 20th-Century America* (Cambridge: Cambridge University Press, 1998), 151-152. For comparison see Thomas P. Hughes, *American Genesis: A History of the American Genius for Invention* (New York: Penguin Books, 1989), 71-74.

[18]Stephen L. McFarland, *America's Pursuit of Precision Bombing, 1910-1945* (Washington, D.C.: Smithsonian Institution Press, 1995), xi.

development of guided munitions technology, with particular emphasis on the effect this technology has had on U.S. national security policy.

In order to make sense of such a broad topic, however, this study will necessarily be limited in scope. Precision guided munitions have been variously defined as anything from an accurate firepower system whose overall performance provides a high probability of hitting targets with single-round efficiency, to a weapon capable of achieving a specified "circular error probable," that is, the radius of the circle around the target within which fifty percent of firings will fall.[19] However, because not all munitions fitting these broad categories have contributed equally to the revolution in warfare, this paper will concentrate on a specific class of weapons: conventional bombs delivered by manned aircraft that are interactively guided to terminal impact by human hands. Specifically omitted by this definition are ballistic missiles, which once formed the nucleus of U.S. national defense, but which have been rendered largely impotent by political complications associated with their nuclear payloads. Also omitted are cruise missiles, which, while enjoying the decided advantage of not endangering human operators, are inferior to true precision munitions because of their significantly higher cost, lesser accuracy, smaller non-penetrating warheads, and lack of flexibility in terms of in-flight retargeting or re-attack capability.[20] In order to avoid creating here a tedious list of definitions, other terms central to this study, such as military strategy and national security policy, will be defined as introduced.

---

[19]Lawrence S. Hagen, *The Two Faces of Janus: An Assessment of the Politico-Military Impact of Precision-Guided Munitions* (Kingston, Canada: Queen's University Centre for International Relations, 1977), 4.

[20]Richard P. Hallion, "Precision Guided Munitions and the New Era of Warfare," *Air Power Studies Centre Paper Number 53* (Fairbairn, Australia: Air Power Studies Centre, 1997), 26.

The next chapter will discuss the earliest attempts to develop a precisely guided, aerial delivered bomb. In the United States, this effort received serious attention as early as the First World War, and resulted in a marginally successful "aerial torpedo" by the 1920s. In order to put this technological development in context, this chapter will explore the broader impact of technological change on military strategy. By first examining World War I, with its new and evolving technologies, it should be possible to assess just how successful wartime attempts at innovation were. This chapter will also examine the interwar years, that formative period in the development of air power doctrine and attitudes, and the subsequent role of air power in World War II. Clearly, the role of the air weapon expanded dramatically during this global conflict, bringing about fundamental changes in military strategy as the extreme limits of total war were reached. Notwithstanding the predominance of the prewar doctrine of strategic bombardment using freefalling weapons, World War II witnessed significant development programs among both Allied and Axis powers aimed at precisely-steered airborne munitions. This second chapter will thus demonstrate the persistence and pervasiveness of the early attempts at guided weapons, addressing the underlying question of why precision is so important. At the same time, this chapter will reveal a technology that consistently exceeded the grasp of its would-be inventors, resulting in partial successes at best.

Chapter 3 will examine the relationship between America's rapidly developing air power technology and its evolving national security policy during the crucial decade of the 1950s. Based on World War II experience, from the mathematically-derived operations research data concerning the destructive capability of air power to the practical conclusions of the Manhattan Project, America had little incentive to improve bombing

accuracy following the war. Although slightly improved guided bombs did see limited use in Korea, that limited war, fought without atomic weapons, strained the resources and challenged the strategy and doctrine of America's fledgling, jet-age air force. In its aftermath, the Eisenhower administration adopted a national security policy that clearly substituted technology, and particularly nuclear technology, for manpower. The resulting cold war policies of massive retaliation and flexible response rested upon radical new technologies, including ballistic missile guidance systems, but left American policymakers with few real options. The relative neglect of military battlefield capabilities, and particularly accurate tactical bombing, left America ill-prepared to fight a conventional war, as became painfully obvious in Vietnam.

The period during the 1960s when technology finally caught up with the early air power visionaries will be the subject of chapter 4. This chapter will highlight the innovations and technological breakthroughs, including developments in aerodynamics, lasers, and solid-state electronics, that finally made the elusive "surgical strike" possible. An examination of the specific contributions made by participants within the military, government, and civilian industry further illuminates the process by which innovative military technologies are selected and created. Part of this investigation will include exploring the extent to which precision guidance stemmed from the historical antecedents of the previous chapters, and how much was true novelty. In order to make sense of such a complex technological system, this chapter will describe in detail the engineering, development, and testing of the first laser guided bombs, but it will stop short of discussing the results of initial combat testing in Southeast Asia in 1968 and the subsequent operational use and impact of PGMs.

The use of precision guided munitions in the Vietnam War, and particularly the Linebacker air campaigns of 1972, marked a watershed in the application of modern air power. Thus, although chapter 5 represents a relatively short period of time, it is critical to an understanding of the long-term effects PGMs have had on military strategy and, consequently, national security policy. This chapter will examine the actual use to which precision guided munitions were put as they came of age in Vietnam. During the final year of this conflict, newly acquired guidance technology allowed U.S. forces to foil a major enemy offensive against South Vietnam without reversing the rapid troop drawdown already well underway. Clearly, this new technology created attractive new choices and options for American policymakers. This chapter will, therefore, explore the contemporary attitudes, both within and outside the military, regarding possible future usage. Such an examination must also necessarily include some discussion of the phenomenon of casualty aversion, which has been intertwined with PGMs from the beginning, but gained considerable currency in the quagmire of Vietnam.

The sixth chapter will examine the subsequent rise of this special class of weapons, which surpassed even the most optimistic predictions of the Vietnam era. Analysts writing in the years following the Vietnam War were quick to grasp the potential for revolutionary change embodied in PGMs, some even comparing them to the atomic bombs that had so completely altered warfare some thirty years earlier. Crises and events in and around the Middle East, including the Arab-Israeli Wars, the U.S. raid on Libya, and ultimately the Persian Gulf War, proved instrumental in fostering an ever-increasing demand for precision weapons. While the obvious focus of this study remains throughout primarily an examination of the American experience with PGMs, this period also lends

itself well to a slightly broadened view—to include a brief look at how allies and adversaries, particularly the Soviet Union and later Russia, responded to America's increasingly high-tech arsenal. This chapter will also illuminate the high-level policy decisions in this country that influenced the marked shift toward reliance upon PGMs. While analyzing the military policy of the late 1970s, of particular interest will be the extent to which America's research agenda was driven by these early experiences with PGMs, and to what extent later technologies were then pursued to achieve specific strategy and policy goals.

The seventh and final chapter will specifically examine changes in U.S. national security policy attributable to the advent and adoption of PGMs. Recent military operations by the United States have highlighted a dramatic shift in America's use of the military instrument of power. An analysis of recent American military interventions throughout the past two decades seems to indicate that air power has become the *de facto* "coercive arm" of American national security policy. This chapter will investigate whether the results of recent military actions justify America's near-exclusive reliance upon precision air strikes, or if American policymakers have perhaps overestimated what PGMs can accomplish for them strategically and politically. Hopefully, such an examination will result in even more general applicability, leading to meaningful insight not only into how technology will affect the future of national security, but how people cope with technological change elsewhere.

In tracing the development of PGMs, from the rudimentary radio controlled weapons of the 1920s to the state of the art laser-guided munitions of the Vietnam era and beyond, it is clear that these weapons did not emerge simply as a natural consequence of

technological change. Rather, as this dissertation's subtitle implies, they were consciously constructed in response to the purposes, ethics, and values of American society. With the advent of PGMs, the U.S. finally achieved its goal of a surgical strike capability and proceeded to incorporate it into its military strategy. This dissertation will attempt to assess just how effectively the policies relying upon this technology have been in attaining America's national security goals.

2. – The Roots of Precision Guidance

On August 12, 1944, U.S. Navy pilot Lieutenant Joseph P. Kennedy Jr. climbed aboard a specially modified B-24 Liberator bomber at Fersfield Airdrome, England, for what was to be anything but a routine submarine patrol mission. Twenty-eight minutes into flight, 2,000 feet above the coastal village of Halesworth, his plane was "suddenly enveloped in a large circular ball of flame and white smoke, and disintegrated in the air," killing both Kennedy and his copilot, Wilford Willy.[1] Against the backdrop of the carnage of World War II, Joe Junior's death might have gone unnoticed had he not been the heir apparent of the Kennedy dynasty, with unabashed aspirations to someday become president of the United States. And yet, there was something else quite significant about this final mission, as hinted at by the fact that Kennedy, having previously completed his combat tour, was there as a volunteer involved in a highly-classified, extremely dangerous special project.[2] In fact, young Joe Kennedy lost his life, not at the hands of the enemy, but while breaking new ground as an early pioneer in the development of precision guided munitions.

Quest for an Ultimate Weapon

Actually, the historical roots of precision guidance extended back well before the twentieth century. In order to place the development of this rather recent technology in its proper context, it is necessary to at least briefly discuss the persistence of two interrelated notions in Western military history. First, from the earliest recorded accounts

[1]Hank Searls, *The Lost Prince: Young Joe, the Forgotten Kennedy; The Story of the Oldest Brother* (New York: The World Publishing Company, 1969), 283; quotation from "Intelligence Report—Aphrodite Mission No. 3," 12 August 1944, AFHSO, Bolling Air Force Base, D.C., file no. B5530-351, 2.

[2]Conrad C. Crane, *Bombs, Cities, and Civilians: American Airpower Strategy in World War II* (Lawrence: University Press of Kansas, 1993), 80.

of organized human conflict, which has been amply documented for at least the past 2,500 years, armies have periodically introduced novel technologies in order to obtain military advantage over their adversaries. Even the ancient civilizations provide numerous examples of such innovative technology, including the Greeks' metal armor and ballista, or crossbow, and Rome's catapults and associated siege engines.[3] However, it was perhaps Leonardo da Vinci, writing in the 1400s, who first articulated the second recurring, idealistic idea that the invention of some ultimate weapon would not only win battles, but might actually bring about an end to warfare itself by making war too costly a human endeavor. Since the days of Leonardo, a similar strain of technological idealism has infected the inventors and proponents of numerous new weapons. In fact, virtually every weapon from the Gatling gun to the modern warplane has evoked the justification that by making war more efficient, such weapons would render it less bloody and indiscriminate.[4] In point of fact, the historical record actually supports the converse.

Mankind's quest for the ultimate weapon took on added impetus during the Industrial Revolution of the eighteenth and nineteenth centuries. Most accounts of Western industrialization focus on the multitudinous technologies associated with the "virtuous triangle" of iron, steam, and coal. However, as one prominent historian of technology has noted: "one of the greatest macroinventions of all times occurred during the heyday of the Industrial Revolution, yet it is rarely mentioned in connection with it."[5] The neglected radical new idea referred to here was, in fact, the invention of ballooning

---

[3]Bernard and Fawn Brodie, *From Crossbow to H-Bomb: The Evolution of the Weapons and Tactics of Warfare* (Bloomington: Indiana University Press, 1962), 16-27.

[4]Lee Kennett, *The First Air War: 1914-1918* (New York: The Free Press, 1991), 2.

[5]Joel Mokyr, *The Lever of Riches: Technological Creativity and Economic Progress* (Oxford: Oxford University Press, 1990), 110.

by Jacques and Joseph Montgolfier in 1783. Obviously, manned flight was initially of limited economic value. Yet, this same author, an economic historian by training, has described ballooning as "an epochal invention in terms of novelty and originality," noting that "few inventions were more powerful in accustoming people to the idea of technological progress and alerting them to the ability of human ingenuity and creativity to control the forces of nature and do things never done before."[6] This particular invention found few immediate military applications, and Napoleon, an artillery officer, disbanded the French army's two existing balloon companies in 1799. Nonetheless, by the mid-1800s, the acceptance of the technological progress that balloons and other fruits of industrialization had engendered opened spectacular new vistas for those still seeking the ultimate weapon.

Ironically, industrialization augmented not only the supply of new weapons, but the demand for them as well. During the mid-1800s, the disruptive forces of the Industrial Revolution resulted in extensive social dislocation, which in turn produced political unrest. The direct result of this political upheaval in Europe was widespread revolution, beginning with France and Belgium in 1830 and culminating in 1848 with flames of revolt spreading like wildfire across the continent.[7] Nor was Britain, the seat of industrialization, immune from such revolutionary ferment, although there the industrial middle classes, aided by worker agitation, gained political influence in 1832 by constitutional means. It is not necessary to recount here the well-known tale of Italy's

[6]Ibid., 111; Benjamin Franklin, one of the first Americans to witness ballooning, clearly perceived it as an ultimate weapon. In a 1784 letter he asserted that the invention of the balloon "appears to be a discovery of great importance. Convincing sovereigns of the folly of wars may perhaps be one effect of it, since it will be impossible for the most potent of them to guard his dominions" against an army transported by air. See John Bigelow, ed., *The Complete Works of Benjamin Franklin* (New York, 1888), VIII, 432.

[7]Richard A. Preston, Alex Roland, and Sydney F. Wise, *Men in Arms: A History of Warfare and its Interrelationships with Western Society* (Fort Worth: Harcourt Brace Jovanovich, Inc., 1991), 177.

abortive attempt to achieve independence during this period, inspired by Giuseppe Mazzini and Giuseppe Garibaldi's red-shirted "Legion." However, of particular significance to this work are accounts of an historic first, which occurred during the Italian War of Independence. In opposition to the spreading Italian independence movement, an Austrian army of occupation besieged Venice, scattered Garibaldi's forces en route to join its defenders, occupied the Venetian mainland, and bombarded the city mercilessly. During the final phase of the siege in the summer of 1849, the existing technologies of artillery and flight were married when the Austrians dropped fused bombs on Venice from a hundred large Montgolfier hot-air balloons.[8] This unhappy premier event for the inhabitants of Venice ushered in the age of aerial bombardment and provided a foretaste of the rise of air power that would eventually dominate warfare in the twentieth century.

The evolution of aerial bombardment from nineteenth-century Venice to today's precision guided weaponry was anything but a uniform trajectory. Following the events of 1849, other armies, including those involved in the American Civil War, experimented with aeronautics in an attempt to produce decisive military advantage.[9] Although a serious analysis of the latter half of the nineteenth century is clearly beyond the scope of this study, from the standpoint of history of technology, this period highlights a curious tension that developed between the Western military's hidebound resistance to new weaponry and the never-ending quest for an ultimate weapon. As a result, it was quite

---

[8]Frederick Stansbury Haydon, *Aeronautics in the Union and Confederate Armies: With a Survey of Military Aeronautics Prior to 1861* (Baltimore: The Johns Hopkins Press, 1941), 17-19; R. Ernest and Trevor N. Dupuy, *The Encyclopedia of Military History: From 3500 B.C. to the Present* (New York: Harper & Row Publishers, 1970), 774.

[9]Haydon, *Aeronautics in the Union and Confederate Armies*, 345, 376.

common for military tactics of the day to lag technology, a tendency that arguably persists to the present. As an example, America's leading military expert in the decades preceding the Civil War, Dennis Hart Mahan, was skeptical of the usefulness of "enormously heavy ordnance" as well as small arms with greater range and accuracy. Based on the European experience in the Crimea at Sebastopol in 1855, he concluded the rifle would have little impact upon military tactics.[10] Yet, in the throes of the Civil War, all manner of geniuses and crackpots emerged with ideas for new and "decisive" weapons, and President Lincoln himself played an unprecedented role in their development and employment.[11] This same tension was later humorously exposed in C.S. Forester's 1936 fictional work, *The General*, in which the antihero, General Curzon, is clearly a caricature of the inflexible military leaders of the day who persisted in fighting current wars just as they had fought the last one. Curzon is convinced that "these rattletrap aeroplanes" will never be of any military value, and he is incensed when soldiers leave his prestigious cavalry regiment to join the fledgling Royal Flying Corps.[12]

Perhaps the best example of this dichotomy between military resistance to change and the quest for an ultimate weapon occurred at the Hague Conference of 1899. Convened in response to the ongoing European arms race, in an attempt to promote reductions in armaments, the Russian organizers of this conference proposed the permanent "prohibition of the discharge of any kind of projectile or explosive from

---

[10]Grady McWhiney and Perry D. Jamieson, *Attack and Die: Civil War Military Tactics and the Southern Heritage* (University: University of Alabama Press, 1982), 146.

[11]Alex Roland, "Technology and War," in *Military Enterprise and Technological Change: Perspectives on the American Experience*, ed. Merritt Roe Smith (Cambridge, Mass.: The MIT Press, 1985), 357.

[12]C.S. Forester, *The General* (London: Michael Joseph Ltd., 1936), 23-24.

balloons or by similar means."[13] Ironically, it was an American delegate, Captain William Crozier, who convinced the great powers to ratify only a five-year ban, based on the hope that future advances in technology would produce bombs more effective than the current "indecisive quantities of explosives, which fall like useless hailstones, on both combatants and non-combatants alike." The future air weapon, Crozier hoped, might "localize at important points the destruction of life and property [and] decrease the length of combat and consequently the evils of war."[14] In fact, a scant four years later in 1903, two other Americans, Wilbur and Orville Wright, created the technological mechanism that would eventually make such an air weapon feasible. However, as with so many previous wonder weapons, the introduction of powered combat aircraft did not immediately make war appreciably less bloody or indiscriminant.

As it was, it took only seven years for the powered aircraft to develop from novel technological curiosity to combat-tested weapon. Crozier and the Wright brothers notwithstanding, the early development of air power was not primarily an American enterprise. The United States Army was, indeed, the first military to acquire an airplane—a Wright flyer purchased on February 10, 1908. However, while Orville was instructing Army flyers near Washington that year, Wilbur toured Europe on a highly successful publicity and sales trip. By the time war broke out in 1914, there were well over 1,000 military aircraft operating in Europe, led by Germany, Russia and France, but including even Greece and the Balkan countries.[15] By contrast, the Army Signal Corps had acquired a grand total of only eight. Ironically, Italy figured prominently in yet

---

[13]Kennett, *First Air War*, 2.

[14]Ibid.; see also Russell J. Parkinson, "Aeronautics at the Hague Conference of 1899," *Airpower Historian* VII, 2 (April 1960): 106.

[15]Kennett, *First Air War*, 7, 21.

another major milestone of air power, for the Italians were the first to use powered aircraft in war—against the Turks in Libya in the fall of 1911.[16] Fielding nine airplanes, two balloons, and two dirigibles, the Italian Army enjoyed a decided advantage over this adversary without an air service. The primary role of early military aviation was initially reconnaissance, but aircraft were also used in Libya for artillery spotting, transport, and even for bombing enemy troops, supplies, and facilities.[17] Given the diminutive size (approximately five pounds) and relative inaccuracy of these earliest bombs, most observers concluded that aircraft had provided the Italians excellent observation but were of little use as an offensive weapon.

When the Libyan War ended in 1912, an Italian Army officer, Major Giulio Douhet, emerged as one of the very first to think and write critically about the role of air power in warfare beginning with his *Rules for the Use of Airplanes in War*. He also wrote a report on the meaning of the war for the future employment of aircraft, which foreshadowed an expanded 1921 publication on his pioneering theories, entitled *Il dominio dell'aria* (*The Command of the Air*). This extensive report recommended that the Italian air force develop a general purpose aircraft at once suited to reconnaissance, air combat, and bombardment. Such a plane should be capable of carrying a heavy load of bombs, because, in Douhet's own words, "the skies are about to become a battlefield as important as the land or the sea."[18] Two brief wars in the Balkans in 1912 and 1913 involved rudimentary air forces on both sides, and served as precursors to the Great War, since the

[16]Phillip S. Meilinger, "Giulio Douhet and the Origins of Airpower Theory," in *The Paths of Heaven: The Evolution of Airpower Theory* (Maxwell Air Force Base, Ala.: Air University Press, 1997), 185.

[17]Ibid.; Kennett, *First Air War*, 18.

[18]Paul G. Gillespie, "*Command of the Air* by Giulio Douhet," in *Encyclopedia of Airpower*, ed. Walter Boyne (Denver: ABC-Clio Press, 2002); Meilinger, "Giulio Douhet," 184-185.

participating airmen included Germans, French, British, and even the odd American. While the prevailing military assessment, once again, seemed to vindicate the use of aerial reconnaissance, there was very little offensive use of aircraft in the Balkans, and little indication that air power had revolutionized warfare in any appreciable way.[19]

Air power did, as it turned out, play a prominent role in the subsequent hostilities of World War I, with significant advances made to the emergent roles of reconnaissance, bombardment, pursuit, and ground attack. Specifically in the realm of bombing, the belligerents went from randomly dropping small projectiles from observation aircraft, to the development and use of long-range bombers, bombsites, and one-ton fragmentation and incendiary bombs.[20] However, despite rapid technological improvements in both aircraft and explosives, bombing clearly failed to break the European stalemate, and did little or nothing to temper the maelstrom of that most bloody and costly war to date. Centuries earlier, Leonardo da Vinci had been able to envision and sketch such marvelous innovations as the submarine, flying machine, tank, steam cannon, rapid-fire catapult, and parachute—ideas which clearly exceeded the technology of his day and, thus, were more dream than invention. By the early twentieth century, however, industrialization and advances in technology had made the manned bomber, along with many other previously incomprehensible weapons, reality. Yet, this would-be ultimate weapon neither deterred war nor decided battles, as expected by Leonardo and others. Undaunted, however, in the midst of the First World War air power proponents rallied to develop the technology that would, it was hoped, transform the nascent airplane into a decisive weapon of war.

---

[19]Kennett, *First Air War*, 19.
[20]Ibid., 41, 51.

Quest for Precision

Certainly since the first recorded use of projectile weapons it has been understood that combatants can dramatically multiply the effectiveness of their weapons through a combination of improved accuracy and increased firepower, or rate of fire. Historically, technological constraints have made accuracy difficult to achieve, even over modest distances. As a consequence, examples abound of great military leaders who innovated to gain victory by maximizing their firepower: Henry V's longbows at Agincourt in 1415, Gustavus Adolphus's standardized field artillery and light muskets with cartridges at Breitenfeld in 1631, Frederick the Great's long lines and oblique order at Leuthen in 1757, Horatio Nelson's withering broadsides at Trafalgar in 1805, and Napoleon's *grande batterie* at Austerlitz that same year, to name but a few. During the second half of the nineteenth century, machine tools and other improvements in manufacturing made it feasible to equip armies and navies with increasingly accurate weapons, notably rifled muskets and cannon. By 1914, the combination of accuracy (small arms and artillery) and firepower (machine guns and ever more deadly artillery shells) gave a tremendous advantage to the defensive side, producing the infamous entrenched stalemate across Western Europe. In an effort to break this stalemate, belligerents on both sides pursued a wide variety of innovative diplomatic, strategic, and technological solutions.

In the United States, the pursuit of war-winning technologies became a national pastime even before war was declared. Shortly after the sinking of the *Lusitania* in 1915, Navy Secretary Josephus Daniels drafted Thomas Edison to create a Naval Consulting Board, in order to mobilize "the natural inventive genius of Americans to meet the new

conditions of warfare."[21] Because Edison did not foresee a significant role for scientific research, he included on his board not scientists, but such inventors and icons of American industry as Leo Baekeland, Willis Whitney, Frank Sprague, and Elmer Sperry. In response, eminent astronomer George Ellory Hale mobilized the nation's scientific community and, the following year, formed the National Research Council with the specific aim of encouraging pure and applied research to bolster national security. In retrospect, historians have generally found the Naval Consulting Board wanting, concluding that effective defense technology required the coordinated efforts of scientists and engineers. In short, Edison's antiquated views epitomized the decline of the independent inventor, while Hale's group highlighted the newfound importance of industrial and academic research for all future, but particularly military, innovation.[22] However, such an interpretation ignores several important innovations made by members of the Naval Consulting Board during the course of the First World War, including Whitney's submarine detection equipment and Sperry's depth charges. Before addressing one such project of particular importance to this study, it is worth examining briefly the sources of wartime innovation and invention.

The relationship between war and technological innovation has been hotly debated since before the technological heyday of World War I. One school of thought, articulated by economic historian Werner Sombart in 1913, maintains that war has had a positive influence on the evolution of technology, and has stimulated invention, investment,

---

[21]Daniels to Edison, cited in Daniel J. Kevles, *The Physicists: The History of a Scientific Community in Modern America* (Cambridge, Mass.: Harvard University Press, 1971), 106.

[22]Thomas P. Hughes, *American Genesis: A History of the American Genius for Invention* (New York: Penguin Books, 1989), 126; Kevles, *The Physicists*, 138.

production, and innovation, producing eventual consequences far in excess of mere military goods and services.[23] The contrary viewpoint holds that war creates only a superficial and false impression of technological advance by using up the accumulated ideas of the past in frenzied production, without renewing the supply, and is thus destructive of technical progress.[24] The fact that this debate has made little headway in subsequent decades is an indication that neither extreme offers a satisfactory explanation for the fits and starts of wartime technological innovation evident throughout the past century. If the current study can contribute anything to this larger question, it will be to show that, despite appearances, rarely did the technologies of precision guidance spring from whole cloth during wartime. In fact, not only did most of the critical innovations have clear technological antecedents, they were often the direct continuation of prewar ideas, but pursued with increased resources and urgency.

A good case in point was the Naval Consulting Board's enterprising project, the aerial torpedo, which resulted in the world's first guided cruise missile. Not surprisingly, it was a specific perceived wartime need that led to the development of this technological innovation. As previously noted, powered aircraft initially had an extremely limited offensive role in World War I. In an attempt to use the bomber as a decisive technology over deadlocked Europe, belligerent military forces pursued the multiplication of firepower, initially manifested in the practice of attacking with "swarms" of aircraft. The extent of this practice is apparent from a 1915 Royal Flying Corps policy paper stating:

---

[23]Alex Roland, "Technology and War," 350.

[24]Ibid., 351; the classic controversy in this debate was staked out in Werner Sombart's *Krieg und Kapitalismus* and John U. Nef's *War and Human Progress*—see also Alex Roland, "The Impact of War Upon Aeronautical Progress: The Experience of the NACA" in *Air Power and Warfare*, ed. Alfred F. Hurley and Robert C. Ehrhart (Washington, D.C.: Office of Air Force History, 1979).

> the go-as-you-please methods have been abandoned definitely both by the French and by ourselves in favour of attacks carried out by swarms of aeroplanes. It is now an accepted principle that attacks on all important objectives should be carried out by as many aeroplanes as possible, all the aeroplanes flying together and reaching the objective together.[25]

Nevertheless, because only the leader of a swarm generally used a bombsight—and a rudimentary one at that—with the rest simply dropping on cue, this type of bombardment resulted in a very wide bomb pattern, thus suitable only for large targets. One obvious method for achieving greater accuracy was to bomb from lower altitudes. However, the practice of flying bombers at low level over enemy targets proved so deadly to the attackers that by the second year of the war French doctrine called for bombers to fly at varying heights of 6,000 feet and above in order to confound antiaircraft gunners.[26] Thus, there emerged early in the conflict a clear demand for an aerial weapon accurate enough to strike small targets of military importance, but resilient enough to withstand the punishment of continuously improving ground defenses.

In response, efforts quickly got underway in the United States to render the air weapon more effective by increasing its precision. Recognizing the challenges faced by allied airmen in Europe, the Naval Consulting Board approved an aerial-torpedo project in April 1917, whereupon the U.S. Navy awarded a $200,000 contract to the Sperry Gyroscope Company.[27] Sperry engineers installed automatic controls in a specially designed Curtiss airplane and on March 6, 1918, successfully flight-tested on Long Island what was essentially the world's first cruise missile. Unfortunately, continued efforts during the summer and fall of that year resulted in frequent structural failure, launch

---

[25]R.F.C. Headquarters policy paper on bombing, December 1915, reprinted in Robert Saundby, *Air Bombardment: The Story of its Development* (New York: Harper & Brothers, 1961), 14.

[26]Ibid.

[27]Hughes, *American Genesis*, 130.

malfunctions, and poor guidance caused by precession of the gyroscopes, so that the planned mass production never came about.[28] However, four months prior to the milestone maiden flight, on November 21, 1917, General George Squier, Chief Signal Officer of the Army, visited Amityville, Long Island, and observed the progress being made on the Navy's aerial torpedo project. Impressed, he recommended to the Aircraft Board that the Army immediately commence development of a similar device.[29] The subsequent Army project benefited from the work already done by the Navy team, but it also introduced a variety of innovations designed to make the aerial torpedo a more affordable, reliable weapon, resulting in the initial production of a "successful" product.

To spearhead the Army's aerial torpedo project, Squier turned to another well-known inventor and industrialist, Charles F. Kettering. After witnessing preliminary tests of the Sperry aerial torpedo, Kettering was convinced that the technology had promise, but that it would never be highly successful unless it could be simplified—to allow for quantity production and quick field assembly—and made cheaply enough to compete with existing high-explosive artillery shells.[30] In order to achieve these ends, Kettering enlisted the aid of several noteworthy individuals and firms. For airframe design, he turned to none other than Orville Wright and the Dayton Wright Airplane Company that both men had played a role in establishing. For engine development, he recruited C.H. Wills and Ford's DePalma Motor Company in Detroit. And, after failing to develop a reliable gyroscope control system, Kettering signed on Elmer Sperry himself to develop

[28]Ibid., 131; see also Kenneth P. Werrell, "The USAF and the Cruise Missile: Opportunity or Threat?" in *Technology and the Air Force: A Retrospective Assessment*, ed. Jacob Neufeld, George M. Watson Jr., and David Chenoweth (Washington, D.C.: Air Force History and Museums Program, 1997), 142.

[29]U.S. Army Experimental Engineering Section, "The Kettering Aerial Torpedo," 19 May 1927, AFHRA, Maxwell AFB, Ala., file number MICFILM 43794; interestingly, this detailed historical and technical summary was prepared by J.H. Doolittle, then a first lieutenant assigned to the Airplane Branch.

[30]Ibid.

and install the automatic controls.[31] In official correspondence, the resulting aerial torpedo went by many names, including ammunition carrier, automatic carrier, flying bomb, and "Liberty Eagle." To the men who built it, Kettering's device became affectionately known as "The Bug." Because it played a pioneering role in the transition from preprogrammed to interactively guided munitions, ushering in the technique of radio control, it deserves to be examined in greater detail.

What was most remarkable about the Kettering Bug was its simplicity. The finished product resembled a small biplane without cockpit or landing gear (unnecessary because the Bug was launched pilotless from a dolly on a metal track), measuring twelve feet in length and fifteen in wingspan. With a full weight of 550 pounds, it could carry an explosive payload of 200 pounds some seventy-five miles at approximately 100 mph. Directional control was maintained by means of a gyroscope, which activated small pneumatic valves when displaced, in turn operating a vacuum bellows connected to the rudder. Altitude control was by means of an aneroid barometer acting on a second gyroscope, which similarly operated a vacuum bellows attached to the elevator. Lateral control was simply obtained by a large wing dihedral of approximately ten degrees, while distance control was by a wind driven counter which, after a specified distance, shorted the engine ignition.[32] In order to construct the Bug as cheaply as possible, without competing for scarce aircraft materials, the fuselage was made of plywood and cardboard, and the wings were covered with muslin and paper. Similarly, its thirty-eight horsepower V-4 engine was made of aluminum, with cast iron cylinders—like all other components,

[31]U.S. Air Force Museum, "Kettering Bug Exhibit," 14 March 1964, AFHRA, Maxwell AFB, Ala., file number K289.9201-1.

[32]U.S. Army Experimental Engineering Section, "Kettering Aerial Torpedo," 1-2.

its intended short life allowing minimal expense.[33] One final indicator of its overall simplicity was the fact that all parts were detachable for shipment, yet in repeated tests two men could unpack and completely assemble a Bug in less than five minutes. As an aside, upon seeing Kettering's prototype in July 1918, General Squier, the officer who launched the project, was "astonished at its efficiency" and "immediately saw the great prospective utility of such small machines especially for messenger service in war."[34]

Flight-testing of Kettering's aerial torpedoes began on September 13, 1918, at South Field in Dayton, Ohio. Over the course of the next month, five torpedoes were launched. All crashed within minutes of takeoff except torpedo number three, which circled for forty-five minutes before crashing twenty miles from the starting point. However, on October 22, an aerial torpedo "took off, held a correct course, and crashed at a predetermined point."[35] Based on the promising results of this first successful flight, the Army increased its initial order from twenty-five to 100, and plans were made to start production on a large scale. However, the armistice of November 11, 1918, less than three weeks later, abruptly ended all demand for production, and funding for the program quickly dried up. In the end, the Army expended roughly $275,000 to obtain twenty complete torpedoes (plus sixteen in various stages of completion and wings for an additional sixty-four), which equated to roughly $12,000 per weapon.[36] This figure is deceptive, however, as the cost per unit would have dropped to $1,000 had the expected number of torpedoes been built, and with full-scale production individual costs would

[33]Air Force Museum, "Kettering Bug," 2-3.

[34]George Squier to Orville Wright, 31 July 1918, Box 46, Papers of the Wright Brothers, LOC; this letter, soliciting Wright's judgment on his new "angle of view" highlights Squier's Signal Corps mentality.

[35]U.S. Army Experimental Engineering Section, "Kettering Aerial Torpedo," 2.

[36]Ibid.

have approached half that figure. Such a price would have made the aerial torpedo competitive with large explosive shells of the day.

Before examining the significance of the aerial torpedo in the development of precision guidance, it is important to note that this device hardly sprang *ab initio* from the minds of the Naval Consulting Board. As Thomas Hughes rightly pointed out, the aerial torpedo had a history.[37] In fact, as early as 1908, Elmer Sperry sought to convince the Wright Brothers of the usefulness of "gyroscopes as applied to flying machines."[38] Within four years he had established the Sperry Gyroscope Company in New York, and boasted that he had made substantial advances in the art of automatic stability for airplanes. Once again courting business from the Wright Brothers, he made the claim that "this company is prepared to undertake the installation of a stabilizing plant upon one or more of your aeroplanes which will be entirely automatic in its operation and the performance and results of which will be guaranteed."[39] Two years later, Sperry's son Lawrence made good on those claims when he turned over control of his plane to the Sperry automatic gyrostabilizer at a Paris air show, raising his hands while a mechanic walked out on the wing. For his efforts, Sperry won a 50,000-franc prize for airplane safety. In 1916 the Sperrys added a steering gyro to their system to create a functional automatic pilot. Clearly, aerial torpedo technology developed for the Navy and Army had antecedents dating back almost to the advent of powered flight. In fact, the Naval Consulting Board's approval of the aerial torpedo project in 1917 amounted to little more than a ratification, or vote of confidence, for a patent filed by Lawrence Sperry the

[37]Hughes, *American Genesis*, 128.
[38]Elmer Sperry to Messrs. Wright Bros., 26 February 1908, Box 46, Papers of the Wright Bros., LOC.
[39]Elmer Sperry to Wright Bros. Aeroplane Co., 13 June 1912, Box 46, Papers of Wright Bros., LOC.

previous year, which described the aerial torpedo right down to its engine revolution counter for cutting power at a predetermined distance.[40]

Radio Control

Obviously, aerial torpedoes were developed too late to ever see actual combat in World War I. In fact, it is doubtful that such rudimentary, imprecise weapons could have influenced the outcome of that European bloodbath in any appreciable way, even had they reached the front lines in time. However, their potential to radically alter the face of future battle was not lost on U.S. military leaders of the day, and, as a result, the peace of Versailles did not mark the end of the Army's aerial torpedo project. As a first step, the Air Service Test Board decided in September 1919 to expend the remaining Kettering torpedoes, purchased the previous year, in a series of flight evaluations conducted at Carlstrom Field, in Arcadia, Florida. Between September 26 and October 28 of that year, a total of thirteen Kettering Bugs were tested. Every one of them crashed within two miles of launch, some failing to liftoff from the launch car at all, and others "augering in" in spectacular fashion, because of engine, structural, or mechanical failure.[41] For the thirteenth and final test, a torpedo was constructed using salvaged parts from previous wrecks, and was fitted with a new type of altitude control. And, while that vehicle was marginally more successful than its predecessors, flying almost sixteen miles at the proper altitude and approximately on course, it too crashed prematurely because of engine trouble. Among its conclusions, the Test Board found that the existing launch device was seriously hampered by crosswinds and should be replaced by a catapult; the

[40]Hughes, *American Genesis*, 130.
[41] U.S. Army Experimental Engineering Section, "Kettering Aerial Torpedo," 3.

gyroscope used was inadequate and should be made more powerful; and, in classic understatement, "the motor is not sufficiently reliable to permit of the torpedo flying over friendly troops."[42]

Despite such inconclusive results, and even amid the inevitable postwar drawdown and budgetary constraints, the U.S. Army continued its pursuit of an accurate aerial torpedo throughout the interwar period. In fact, the importance of the aerial torpedo in the development of precision guided munitions stems directly from its evolution during the 1920s from autonomous cruise missile to interactively guided aerial weapon. The interwar innovation that brought about this radical change was the incorporation of radio control. In the aftermath of the Florida testing, the Army decided in March 1920 to scrap the Kettering project, and contracted with the newly founded Lawrence Sperry Aircraft Company to convert three training aircraft to aerial torpedoes.[43] The younger Sperry's experiments continued with varying success until April 1922, when it became obvious that the unpredictability of wind velocity and direction made it virtually impossible to maintain a purely mechanical aerial torpedo on a predetermined course. Since the contract specified only that the torpedoes function without manual control, Sperry began to investigate the possibility of controlling the aircraft by radio. On June 29, 1922, another milestone was reached when Sperry launched an airplane from Long Island and flew it directly over the center of a target thirty miles away, by means of twelve radio correctional impulses transmitted to the aircraft en route.[44] The following month, several

---

[42]Ibid., 4.

[43]U.S. Army Air Corps Board, "Study No. 9—Radio Controlled Aircraft," 25 October 1935, AFHRA, Maxwell AFB, Ala., file number 167.5-9, 3; see also Hughes, *American Genesis*, 134.

[44]Air Corps Board, "Study No. 9—Radio Controlled Aircraft," 4.

additional flights to targets thirty, sixty, and even ninety miles distant were successfully carried out.

Clearly, radio control offered the promise of precision guidance far superior to anything previously accomplished using automatic control. However, over the course of the next decade, one technological bottleneck after another emerged, preventing the development of a consistent, reliable torpedo. Sperry initially ran up against mechanical failures, including leaky pneumatics, faulty electrical connections, and precession of the gyroscopes. In order to eliminate these shortfalls, the bulk of resources between 1924 and 1930 were focused on designing an airplane with better inherent stability characteristics, with little success. By 1931, a report on the progress of this project concluded that the program for producing an inherently stable airplane would have to be abandoned in favor of adapting radio directional control to an airplane controlled by the Sperry Automatic Pilot. However, a November 6, 1931 report to the Assistant Secretary of War admitted that "the problem of superimposing radio control on the automatic pilot was extremely complicated and would require careful investigation and several years of concentrated effort."[45] Not surprisingly, given this pessimistic prognosis and the contemporaneous economic turmoil of the Great Depression, on May 13, 1932, the Army's aerial torpedo project was closed, ostensibly for lack of funds, but with the notation that it be reopened later.

In actuality, enthusiasm for the development of aerial torpedo technology had begun to ebb around 1925, for other reasons. Obviously, unmanned aerial torpedoes were only one component within the very broad and heated debate, which emerged in the early

[45]Ibid.

1920s over the role of air power. A key figure in this debate, and arguably the dominant figure in American aviation from 1919 until his court-martial in 1925, was Brigadier General William "Billy" Mitchell. While perhaps best remembered for his crusade to establish an independent air service for the United States, Mitchell did much to shape the tactical and doctrinal growth of the Army's air service in the early 1920s, including his important bombardment manual and a study of aviation's place in Pacific strategy.[46] Mitchell's seemingly prescient conclusions in a 325-page report, following his 1924 inspection of Hawaii and the Far East—which not only predicted war with Japan, but detailed a likely scenario for a Japanese attack against Pearl Harbor—have been widely cited.[47] Perhaps less known, but equally significant, were his views on the emerging technology of aerial torpedoes.

Comparisons between Mitchell and contemporary Italian air power advocate, Giulio Douhet, are commonplace, and indeed the two held many similar views. However, Mitchell consistently had greater confidence in air defense than did Douhet. In fact, as defenses against aerial attack became increasingly sophisticated, Mitchell argued that, in order for the offensive to maintain its advantage, future bombers would have to avoid over-flying targets and surrounding defenses, by resorting to gliding bombs and aerial torpedoes launched from many miles away. Furthermore, while he was by no means the only one concerned about aerial attack against Great Britain, his observation that "the aerial torpedo, a radio-controlled airplane packed with explosive, would be an excellent weapon for an enemy to use against the crowded island" once again proved almost

[46]Alfred F. Hurley, *Billy Mitchell: Crusader for Air Power* (Bloomington: Indiana University Press, 1964), 76, 89.
[47]Ibid., 86-88.

prophetic in light of the German missiles used against England almost two decades later.[48] Mitchell was, indeed, a visionary, who predicted that his own children would live to see "aeronautics become the greatest and principal means of national defense and rapid transportation all over the world." His influence upon air power was certainly profound, but it took time, sometimes decades, for technology to catch up with his theories.[49] While his court-martial and subsequent resignation from the Army in 1926 almost certainly hindered the Army's aerial torpedo project, his lasting contribution to the development of precision guided munitions may well have been in the preparation of millions of Americans to accept both a new kind of warfare, and the potential relationship between foreign policy and air power.[50]

Lawrence Sperry's death in an aircraft accident while crossing the English Channel in December 1923 also had a negative impact on the aerial torpedo project. Coincidence or not, within months of his death the Army decided to lessen priority of the aerial torpedo work in order to concentrate on bombsight development.[51] Consequently, the real emphasis during the remainder of the interwar period was not on guidance, per se, but on strategic bombardment, which air power theorists, including Douhet and Mitchell, thought would provide the solution to the failed land offensives of World War I. Using heavy bombers to transcend geographic barriers, an entire country might be exposed to attack, leading Mitchell to conclude that,

> No longer will the tedious and expensive process of wearing down the enemy's land forces by continuous attacks be resorted to. The air force will strike

---

[48]Ibid., 116, 121.

[49]Ibid., 89, 121; quotation, cited in Hurley, is from the dedication page of Mitchell's 1930 *Skyways*.

[50]Hurley, *Billy Mitchell*, 124.

[51]Stephen L. McFarland, *America's Pursuit of Precision Bombing, 1910-1945* (Washington, D.C.: Smithsonian Institution Press, 1995), 22-23.

> immediately at the enemy's manufacturing and food centers, railways, bridges, canals, and harbors. The saving of lives, manpower, and expenditures will be tremendous for the winning side.[52]

Obviously, this aerial approach to warfare still required a measure of accuracy, but the resulting precision-bombing doctrine as developed at the Air Corps Tactical School in the 1930s, and later implemented in World War II, relied primarily on technological improvements in heavy bombers, such as the Boeing B-17, and aiming devices, such as Norden and Sperry stabilized bombsights, to make precision bombing a reality. When the Army finally cancelled the aerial torpedo project in 1932, the way was cleared for this emerging doctrine of daylight precision strategic bombing, carried out by manned, heavy bombers equipped with precision bombsights.[53]

At first glance it appears that radio control, at least as applied to precision weapons, was a technological dead end, and yet, as it would turn out, radio guidance was far from dead in 1932. Almost three years to the day following cancellation of the Army's aerial torpedo project, Major General Benjamin Foulois, Chief of the Air Corps, resuscitated work on radio controlled airplanes. In a memo to the Adjutant General, signed May 6, 1935, he cited intelligence reports indicating British work in this area and concluded that "in order that the development may not gain too great a lead in foreign countries, it is believed that a project should be undertaken by the Air Corps to cover a similar development." Expressing the opinion that "general aeronautical progress in the past four or five years has indicated that radio control of airplanes is not impracticable," Foulois proposed that the War Department authorize such a project, appropriate a special allotment of $500,000 in funding, and allow his office to "undertake secret negotiations

---

[52]William Mitchell, *Winged Defense* (New York and London: G.P. Putnam's Sons, 1925), xv-xvi.
[53]McFarland, *America's Pursuit of Precision Bombing*, 23, 83.

with one or two of the outstanding electrical companies in the country to perfect mechanisms for radio control of airplanes."[54] As a result of Foulois's revived interest in radio-controlled aircraft, the Air Corps Board conducted a special investigation into the subject in October 1935. After reviewing all previous work done on military aerial torpedo projects, the board released its classified "Study No. 9," concluding ambivalently that, indeed, "unmanned radio controlled aircraft have important military uses as aerial torpedos to be used against ground installations," but that "upon satisfactory solution of full radio control of aircraft in take-off, flight and landing, considerable time and effort will still be required for development of a satisfactory technique in directing the flight of aerial torpedos against specific objectives."[55]

Even though "Study No. 9" recognized the serious limitations of existing radio control guidance technologies, it nevertheless recommended the resumption of Army efforts to find a "solution to the problem of full radio control of aircraft in flight," noting that "such a program will be expensive...but will produce knowledge far more valuable than its costs."[56] As noted above, Army Air Corps attention and resources had been refocused toward strategic bombardment several years earlier, and initial reaction to the idea of renewed work on radio control was not overly enthusiastic. Responding to Foulois's initial proposal, even before the Air Corps Board could carry out its study, a skeptical chief of Air Corps Materiel Division, Brigadier General A.W. Robins, sent back the following pessimistic assessment:

---

[54]Benjamin D. Foulois, memorandum to the Adjutant General, "Development of Radio Controlled Airplanes," 6 May 1935, AFHRA, Maxwell AFB, Ala., file number 167.5-9.

[55]Air Corps Board, "Study No. 9—Radio Controlled Aircraft," 7.

[56]Ibid., 8.

> If the radio controlled project proposed in the attached communication is of the nature of the Aerial Torpedo or some idea of flying a bomber to a target by means of radio control, it will undoubtedly be an extremely costly research problem and is considered of doubtful practicability. A great deal of money has already been spent in an effort to develop the Aerial Torpedo and this Division is of the opinion that in the present state of radio development, it is not to the advantage of the Government to take up this costly project. It is recommended that no action be taken on the attached communication unless studies of the Intelligence Reports referred to...indicate that the British have information which is not available to this Division.[57]

Such resistance to Foulois's initial request would seem to forebode nothing more than continued desuetude for radio-controlled guided weapons. In actuality, this high-level proposal, and the resulting Air Corps Board report, rekindled the issue of precision guidance on the eve of World War II—particularly in the minds of the Air Corps leadership—resulting in renewed experimentation both before and during the war.

Evidence of the study's impact is unmistakable in the handwritten remarks recorded on a routing sheet that accompanied "Study No. 9" as it circulated through the War Department's Air Corps headquarters in May 1936. For example, the Chief of War Plans and Training noted that "Gen. Arnold is of the opinion the time is ripe to reopen this matter," and he recommended taking it up with Materiel Division "with the idea of initiating a project which will lead definitely to an accomplished result."[58] The reference here is to Brigadier General Henry "Hap" Arnold, then Assistant Chief of the Air Corps. Ultimately, Foulois's successor, Major General Oscar Westover, approved "Study No. 9" in principle, on December 30, 1936, although interestingly he stopped short of authorizing procurement of commercial airplanes to carry out experiments for radio

[57]A.W. Robins, memorandum to the Chief of the Air Corps, "Development of Radio Controlled Airplanes," 31 May 1935, AFHRA, Maxwell AFB, Ala., file number 167.5-9, 1-2.

[58]Air Corps Board, "Study No. 9—Radio Controlled Aircraft," attached routing and record sheet.

controlled flight.[59] And, while this rekindled interest in aerial torpedoes, beginning in 1935, may not have resulted in an immediate flurry of activity and spending, it did lead to revival of the earlier work. By 1938, no doubt with an eye on the volatile political situation in Europe, the Army Air Corps flew and landed a plane successfully by radio control, and subsequently reopened the aerial torpedo development project, with help from some of the "usual suspects." Eight months before the attack on Pearl Harbor, Orville Wright received a brief note from long-time friend Charles Kettering, by now head of General Motors research laboratories, which read, "Dear Orv: ...We are working on the old 'bug' job again. The next time I see you I want to go over it with you in detail and see what you think of it as we now have it. Sincerely, Ket."[60]

Clearly, the quest for precision guidance technology continued throughout the entire interwar period, despite numerous false starts and interruptions. However, several important changes emerged during the critical year of 1941, indicating a major shift in aerial bombardment strategy as America prepared for the possibility, and then likelihood, of war. In June, Army Regulation 95-5 was enacted, replacing the old Air Corps with the Army Air Forces, a new organization with increased autonomy. Two months later, the newly created Air War Plans Division produced a clear articulation of the mature precision-bombing doctrine developed in the 1930s. Known as AWPD/1, this document emphasized the contribution strategic bombardment could make to wartime victory through the destruction of carefully selected targets upon which the enemy people, industries, and armed forces were dependent.[61] Finally, most likely as a direct

[59]Ibid., attached cover sheet.
[60]C. F. Kettering to Orville Wright, 16 April 1941, Box 33, Papers of Wright Bros., LOC.
[61]Crane, *Bombs, Cities, and Civilians*, 24.

consequence of this shift in overall doctrine, the nomenclature of guided weapons also changed. Aerial torpedoes thereafter became known as controllable bombs—and later, guided bombs and missiles—while the term aerial torpedo, when used after 1941, came to mean an air-dropped, submersible anti-ship torpedo.[62]

Guided Bombs in World War II

Entire volumes have been written about U.S. bombing strategy in World War II, but there still remains a lingering debate over its conduct, goals, morality, costs, and results. In particular, the Combined Bomber Offensive in Europe certainly devastated German cities, disrupted transportation, squelched oil and armaments production, tied up vast amounts of enemy manpower and resources, and cleared a path for the advancing Allied armies both on the ground and in the air. Based on such evidence, which abounds in the multi-volume postwar U.S. Strategic Bombing Survey and elsewhere, a convincing argument has been made that this long, costly campaign measurably shortened the war.[63] However, opponents of this argument tend to criticize America's bombing campaign, either condemning it as indiscriminant and immoral, or, more pragmatically, citing its failure to paralyze the German war economy, requiring a victory based on invasion and occupation of exactly the type air prophets had hoped to supplant.[64] This study will not try to definitively settle the debate, but will illuminate some of the technological

---

[62]Air Proving Ground Report, "Drone Activities at the Air Proving Ground Command," December 1951, AFHRA, Maxwell AFB, Ala., file number K240.01, 67.

[63]Mark K. Wells, *Courage and Air Warfare: The Allied Aircrew Experience in the Second World War* (London: Frank Cass and Company, Ltd., 1995), 2; Crane and McFarland, cited above, have made important contributions to this debate as well—both argue that air power contributed to overall Allied victory, though neither concedes it had the potential to win the war independently.

[64]Michael S. Sherry, *The Rise of American Air Power: The Creation of Armageddon* (New Haven, Conn.: Yale University Press, 1987), 165; Sherry has been one of the most outspoken critics of the American strategic bombing campaign, questioning the logic and excesses of massive city bombing and chronicling its failure to produce the optimistic projections of its prewar advocates.

constraints that made the seemingly straightforward American approach—using air power to destroy the enemy's means to carry on the conflict—so immensely difficult to carry out. Indeed, although rapid technological advancements prior to and during the war produced aircraft with unprecedented speed, range, ceiling, and payload, the most illusive capability throughout the Second World War continued to be that *sine qua non* of the U.S. bombing strategy—precision.

Bombing accuracy attainable in 1941 using the Norden Mark XV bombsight and standard M-44 and M-65 1,000-pound bombs was very good by any previous standard, but it was still far removed from the legendary "bomb in a pickle barrel from 25,000 feet." Summing up the accuracy of his VIII Bomber Command's daylight bombing in the first year of the Combined Bomber Offensive, Brigadier General Ira C. Eaker noted that ten percent of bombs fell dead on the aiming point, twenty-five percent within 250 yards, forty percent within an area included in a circle with a radius of 500 yards, and 90 percent within one mile. With optimism characteristic of the air campaign architects, and the American public, Eaker concluded that "it is safe and conservative to say that high level day bombing will be at least ten times as effective for the destruction of definite point targets, as night area bombing," and speculated that "there is now available to the United States and to our allies a sufficient force of heavy bombers to play a decisive role in this war."[65] Of course, the increased accuracy of daylight bombing was a relative thing, and came at considerable cost, as dramatically evidenced by one bomber wing commander's personal letter to a colleague in 1943:

[65]Ira C. Eaker to Maj. Gen. Carl Spaatz, 27 August 1942, Box 76, Papers of Carl Spaatz, LOC, 2.

> I participated in the Bremen operation where I saw sixteen B-17's knocked out of the air. However, if we had destroyed the factory completely it would have been worth fifty B-17's. We did accomplish about 40% to 50% destruction...our computations indicated that it would take three hundred bombers to destroy the target and we dispatched one hundred.[66]

Despite the fact that each downed B-17 meant the loss of ten crewmembers, this participant, like Eaker, retained his enthusiasm for the bombing campaign, noting that "bombing is on the upgrade, and we will be able to accomplish everything that we have set out to accomplish if the Groups and combat crews continue to come."[67]

Since bombing accuracy was the true measure of air force combat effectiveness, such punishing losses could only be justified by actual damage inflicted on the enemy. Marginal successes, like Bremen, garnered attention at the highest levels and produced a plethora of studies and recommendations to improve bombing accuracy. As a result, continuous improvements in equipment and tactics led to noticeable improvements in bombing accuracy as the war progressed. For example, when it was noted that an aircraft changing its heading by three degrees at bomb release caused a deflection error of 600 feet, and a five mile per hour change in airspeed caused a range error of over one hundred feet, strict training guidelines for bombardiers were issued emphasizing that "the last ten (10) or fifteen (15) seconds of the bombing run should be straight and level flying."[68] Similarly, tactics were revised to effectively separate combat wings at the target, or establish proper interval as it was termed, when it was discovered that the lead group typically scored twice as many hits within 1,000 feet of the aim point as the rest of the

---

[66]Brig. Gen. F.L. Anderson, 4th Bombardment Wing Commander, to Brig. Gen. Eugene L. Eubank, 4 May 1943, Box 76, Papers of Carl Spaatz, LOC.

[67]Ibid.

[68]"Suggestions to Wing Bombardiers," July 1943, Box 76, Papers of Carl Spaatz, LOC.

force.[69] By 1944, even the benchmark for measuring accuracy was altered—from bomb percentages within 1,000 feet to the use of circular error probable, or CEP, which simply measured the radius of a circle around the target, within which fifty percent of bombs had fallen. At the pinnacle of the Combined Bomber Offensive, one month prior to the cross-channel invasion of Normandy, an Army Air Forces report revealed that the accuracy of American heavy bombers had improved markedly during the war. From an altitude of 15,000 feet, B-17 and B-24 bombers were able to achieve an unprecedented CEP of just 1,000 feet.[70]

These CEPs tell only half the story, however. As the German occupation army withdrew from France in late 1944, American military officials were finally able to survey and evaluate their bomb damage at close range. After investigating numerous sites in the vicinity of Paris, one officer reported that "at each bombed place visited we were impressed with the accuracy of the bombing and the extent of the damage—damage which far exceeded the original estimates based on photo-reconnaissance unit photos and ground information."[71] In the same report, the president of the French railroad system noted that every railroad bridge over the Seine, Loire, and Oise Rivers had been destroyed, and opined that the Battle of Normandy had been won because such bombing "left untold divisions of fully equipped German troops stranded and unable to get up to the front in time."[72] However, despite such unbridled praise for the accuracy and effectiveness of aerial bombardment, participants were keenly aware of its limitations.

---

[69]Brig. Gen. F.L. Anderson, Commander VIII Bomber Command, to Maj. Gen. Ira C. Eaker, Commander 8th Air Force, 13 September 1943, Box 76, Papers of Carl Spaatz, LOC.

[70]MAAF Caserta to HQ USSTAF, 4 May 1944, Box 76, Papers of Carl Spaatz, LOC.

[71]Headquarters, 3rd Bombardment Division, "Observations on Bombing Results in Paris Area," 18 September 1944, AFHSO, Bolling AFB, D.C., file number B5533-434, 1.

[72]Ibid., 4.

Three months after the Paris report, General Carl Spaatz, overall commander of U.S. Army Strategic Air Forces, admitted that "we are becoming increasingly aware of our inability to achieve accurate bombing on some of our top priority targets."[73]

What Spaatz wanted was nothing new—like his predecessors in the long quest for precision, he hoped new and better technology would solve his inaccuracy problems. As a result, he and other leaders of the air war in Europe embraced several high-profile precision guidance projects during the final year of fighting. Particularly noteworthy as a harbinger of more advanced guidance technologies to come was an experiment given the singularly non-bellicose name Aphrodite. In the letter just cited, Spaatz informed the Air Staff in Washington that "the premium on accurate bombing is very great...we are therefore willing to pay the high price of introduction of new and complicated apparatus because the return is proportionately high."[74] Ironically, it was the desire to precisely strike the launch sites of Germany's pseudo-guided V-2 rockets that motivated the development and deployment of some of the war's first proto-precision guided munitions. At a meeting on June 26, 1944, Eighth Air Force commander, General James Doolittle, directed his 3rd Bombardment Division in England to conduct the experimental project codenamed Aphrodite. Using a variety of technologies, including radio control and television imaging, Project Aphrodite created 20,000-pound bombs out of war weary bombers, and attempted to remotely pilot them to destroy the large rocket launching sites in the Pas de Calais area of France.[75] After expending nineteen robot aircraft, and six

---

[73]Carl Spaatz to Lt. Gen. Barney Giles, Chief of Air Staff, 15 December 1944, Box 16, Papers of Carl A. Spaatz, LOC.

[74]Ibid.

[75]Headquarters, 3rd Bombardment Division, "Report on Aphrodite Project," 20 January 1945, AFHSO, Bolling AFB, D.C., file number B5529-1015, 1.

smaller glide bombs, Aphrodite project managers concluded that, while these experimental missions "proved the value and serviceability of the weapon and equipment," the results were "not satisfactory as far as damage to enemy installations."[76] They attributed the overall failure to weather, vulnerability to flak defenses, and personnel and equipment failure.

In actuality, the Aphrodite plane-bombs suffered from numerous technological shortcomings. For example, because they required manual takeoff, wheel retraction, and throttle setting, pilots were needed to get them airborne and stabilized before parachuting to safety. In fact, it was during the third Aphrodite mission that Joseph P. Kennedy Jr., performing the role of takeoff pilot, lost his life when a faulty electrical arming panel detonated his massive bomb load prior to bailout.[77] When subsequent trials demonstrated a low probability of destroying strongly defended targets, General Spaatz ordered the early termination of the project, and he directed that the few remaining planes be used "to leave in the minds of the Germans the threat of robot attacks against cities [by attacking] an industrial objective in a large German city as far inland as practicable."[78] Encouraged by such prospects, General Arnold suggested going one step further in using Aphrodite as an irritant and morale-breaking weapon. In a November 23, 1944, letter he confided to "Tooey" Spaatz that "my idea would be to turn them loose to land all over Germany so that the Germans would be just as much afraid of our war weary planes on account of not knowing just where they were going to hit, as are the people in England from the buzz

[76]Ibid., 2.
[77]Crane, *Bombs, Cities, and Civilians*, 80.
[78]Headquarters, 3rd Bombardment Division, "Plan for Completion of Castor Project," 12 October 1944, AFHSO, Bolling AFB, D.C., file number B5529-1015, 3.

bombs and rockets."[79] Aphrodite's rapid transformation from precision guided bomb to terror weapon, not unlike the *Vergeltungswaffen* rockets it was originally intended to destroy, brought this early attempt at precision guidance to an unfruitful end. However, this abortive effort to develop precision weapons in World War II was actually part of a much larger endeavor, which commenced well before and continued long after 1944.

An examination of specific technical components of Aphrodite clearly reveals the presence of prewar ideas, and pinpoints the origins of its guidance technologies. Eighth Air Force, and its 3rd Bombardment Division, did not conceive of nor develop the technologies associated with Aphrodite. As an operational military unit, it was charged only with proving the tactical soundness of such weapons by developing methods for their employment and using them in combat operations. It should come as no surprise that the war weary bomber project owed much to the aerial torpedo work of the 1920s and 1930s. For example, in July 1935, as General Foulois agitated for renewed investigation into radio controlled aircraft, his office issued a statement specifically disclosing that "applications envisaged the remote control of aircraft to military objectives, either ground or formations in the air, allowing fulfillment of missions without risk to personnel." The similarities between Aphrodite and this earlier Sperry-inspired project are unmistakable, and hardly coincidental when one considers a passage from this same statement explicitly noting that "the plan as presented requires that the

[79]H.H. Arnold to Carl Spaatz, 23 November 1944, Boxes 16 & 193, Papers of Carl A. Spaatz, LOC; as Crane and others have pointed out, Spaatz was obviously more committed than Arnold to the doctrine of daylight precision bombing. This is obvious from Spaatz's 10 December 1944 reply to the above proposal, wherein he lets his colleague, "Hap," know that "I do not believe that we will achieve significant effect if we 'turn them loose to land all over Germany.' We must perfect our equipment and control technique so that we can be reasonably sure of hitting the target." As an alternative, Spaatz suggested targeting "undefended towns of reasonable size [that] have military targets or industries associated with them."

airplane be taken off by a pilot, who after setting the automatic mechanism leaves by a parachute."[80] However, the guidance mechanism employed in these robot aircraft was significantly improved from the aerial torpedo days, and consisted of five main components: (1) two Azon receivers on different frequencies, one for turn-and-bank control and the other for pitch control, (2) two antennas for the Azon receivers, (3) a radio altimeter for reaching and maintaining a desired true altitude, (4) three Azon servo motors—one to work on impulses from each Azon receiver, and one to work on impulses from the radio altimeter, and (5) a smoke generator for indicating the flight path.[81] Obviously, the development of "Azon" technology was critical to the Aphrodite project.

In fact, Azon—an acronym deriving from this bomb's single-coordinate control in *az*imuth *on*ly—was but one of the many guided missiles developed during the war under the auspices of the National Defense Research Committee (NDRC), a subdivision of the well-known Office of Scientific Research and Development (OSRD). Attacking the overarching and critical problem of controlling the behavior of projectiles, the NDRC coordinated a variety of innovative projects, resulting in the development of proximity fuzes, self-directed (including heat-, light-, and radar-homing) missiles, and, of particular importance to this study, manually guided bombs.[82] Without discounting the importance of the NDRC's other wartime contributions, Azon stands out as its most important achievement for several reasons. First, it was the only guided bomb successfully fielded by the United States in large numbers during World War II. Second, in contrast to all

[80]Air Corps Board, "Study No. 9—Radio Controlled Aircraft," 12.

[81]Headquarters, 3rd Bombardment Division, "General Description of Installation for Double-Azon Control of Aircraft Equipped with C-1 Automatic Pilot," 23 June 1944, AFHSO, Bolling AFB, D.C., file number B5529-1015.

[82]Joseph C. Boyce, *New Weapons for Air Warfare: Fire-Control Equipment, Proximity Fuzes, and Guided Missiles,* Science in World War II—Office of Scientific Research and Development (Boston: Little, Brown and Company, 1947), ix, 257.

previous radio control projects—including ground-launched, propeller-driven aircraft and rudimentary glide bombs—Azon corrected the trajectory of a high-angle bomb during freefall. Finally, Azon's combat success was promising enough that, as will become evident in the next chapter, it became the cornerstone for much of the postwar work on precision weapons.

The Azon project actually originated prior to American entry into the war, when J.P. Molnar and others of NDRC Section D-3 visited Wright Field on September 16, 1940, seeking additional work. Although another section of the NDRC was already working with RCA on the development of a television-equipped aerial torpedo, the Army asked Molnar's group to look into alternative target-seeking control for glide bombs, the general opinion being that conventional high-angle bombs fell too rapidly to improve their accuracy by any manual guiding.[83] However, after observing a demonstration of the television camera and receiver developed for falling bombs by Hazeltine Electronics, Molnar changed his attitude, and convinced the director of the OSRD to fund a project to develop television and radio control, and to further aerodynamic study for high-angle bombs. As with most of NDRC's work before Pearl Harbor, this project was operated at first on a small scale with only a few workers. Nevertheless, the Gulf Research and Development Corporation was issued a small contract, amounting to $5,200 over seven months, and managed to build and test several camera bombs during the summer and fall of 1941.[84] In fact, Gulf remained the prime contractor throughout Azon development and production, but its eventual expenditure of $2 million, and the involvement of MIT and numerous other subcontractors, provides a clear-cut example of a critical innovation that

[83]Ibid., 249.
[84]Ibid., 251.

was a direct continuation of prewar ideas, simply pursued with increased resources and urgency.

In attempting to reduce these ideas to a workable mechanism, however, those engaged in field tests of the "High Angle Dirigible Bomb Project," as it came to be known, encountered numerous technological bottlenecks. For example, a television camera mounted rigidly along the bomb axis made target acquisition and bomb steering extremely difficult, prompting experimentation with vanes that would project into the wind stream and aim the television eye along the tangent to the trajectory. Similarly, control of a rolling bomb using a cylindrical coordinate system proved too complicated for operators, resulting in the adoption of roll-stabilized bombs controlled in Cartesian coordinates.[85] Eventually, after a conversation with Russian-born French refugee Constantin Chilowsky, who had done rudimentary wind-tunnel experiments in prewar France on aerial torpedoes controlled by radio, or electrically by attached thin wire cable, and guided by direct sight, Molnar decided the easiest method of control would be direct-sighted steering. Under this method, a pyrotechnic flare was attached to the bomb's tail, rendering it visible to the bombardier from release to impact. However, it soon became apparent that the problems of steering in range were much more formidable than those associated with direction, or azimuth, primarily because of the parallax problem.[86] Simply stated, this problem derived from the fact that a bomb's forward motion is virtually the same as the aircraft's, so that the bombardier saw it at an increasing distance almost directly below him. With no simple way of determining the distance the bomb

[85]Ibid., 252-254.

[86]U.S. Army Human Engineering Laboratories, "The Accuracy of the Azon Guided Bomb as Affected by Battle Conditions in World War II," May 1964, DTIC AD number 600601, 2.

still had to fall at any given instant, the bombardier had no direct way of knowing the probable impact point in the range coordinate.[87] All the preliminary drops confirmed the relative simplicity of right-left control as contrasted with up-down control, leading project managers to argue that azimuth control could be useful and valuable by itself.

As the war progressed, interest in the high-angle dirigible bomb increased. In the spring of 1942, the Joint New Weapons Committee, a recent creation of the Joint Chiefs of Staff, took on guided missiles as one of its major projects, and recommended rapid acceleration and expansion of the current work, based on both Army and Navy interest.[88] In light of this wartime urgency, and realizing that a system steered in azimuth only could be brought into combat long before a two-coordinate bomb, Azon was adopted as an interim partial solution. The resulting Azon bomb, or VB-1 as it was officially designated, had a simplicity reminiscent of the old Kettering Bug. Rather than creating a new special purpose bomb, Gulf adapted the standard M-65 1,000 pound bomb by removing the normal fixed tail unit and substituting a special cruciform tail with a central compartment. Each of the four tail fins had moveable flaps—two acting as ailerons to prevent the bomb from rolling as it fell, and two acting together as a rudder to steer the bomb right or left of the plane of its trajectory. Inside the tail compartment were housed the radio receiver, gyroscopes, actuators, batteries, antenna, and externally, a flare that burned for fifty seconds with a nominal 600,000 candlepower emission.[89] However, the partial nature of the technical solution made Azon a highly specialized weapon suitable only for use against certain types of targets—namely long narrow bridges or viaducts

[87]Boyce, *New Weapons for Air Warfare*, 263.
[88]Ibid., 255-256.
[89]U.S. Army Human Engineering Laboratories, "The Accuracy of the Azon Guided Bomb," 4.

with fairly straight approaches. In practice, the Azon bomb was aimed in the ordinary way using a Norden bombsight, but after release steered by the bombardier, who saw the bomb as a spot of light against the ground and applied commands of right, left, or zero, using a simple three-position control stick, to keep it on a line to the target.[90]

In early 1943 Gulf produced the first batch of twelve Azon bombs, most of which either failed to stabilize in roll, or failed to respond to radio control. However, even the occasional bomb steered to within twenty feet of a target road was so encouraging that more Azons were built, and included in an Army demonstration of guided missiles held at Muroc Lake, California later that year. After the first bomb hit the center of its target, and the second was deliberately steered 500 feet off the target and then brought back to an impact within thirty-five feet of the center line, the Army requested 1,000 Azons for combat use.[91] Before the war's end, Azons were used in three separate theaters: in the Mediterranean area by the 15th Air Force, in Western Europe by the 8th and 9th Air Forces, and in Burma by the 10th Air Force. Despite one oft-touted success—the destruction of the Avisio Viaduct near the Brenner Pass in Northern Italy, on May 13, 1944—Azons did not prove decisive, nor overly popular, among American combatants in Europe. Lack of enthusiasm for this new weapon stemmed from its serious weather and target restrictions, the added danger of continuing the bomb run until impact, and its questionable reliability and accuracy. Even the Azon project officer admitted that "accuracy has declined to an alarming extent from that obtained in tests and training in Florida," and concluded that "accurately dropping the bomb and then controlling it is too

[90]Ibid., 6.
[91]Boyce, *New Weapons for Air Warfare*, 258.

much for the bombardier."[92] Given its checkered tally, replete with mechanical failures and personnel deficiencies, the Azon project was abandoned in Europe after dropping some 3,000 bombs.[93]

However, a sufficient number of successful drops had been made to demonstrate Azon's value against certain targets. As a result, the project was not scrapped, but rather transferred to the 7th Bombardment Group in September 1944, for use in the China-Burma-India Theater. Apparently Azon's reputation had preceded it, and enthusiasm among airmen there was initially not high. Even so, owing to a wealth of suitable targets and very slight enemy opposition in Burma, Azon eventually registered impressive results there. Because the Japanese were absolutely dependent upon rail lines from Siam and Malaya for supplies, the 10th Air Force unremittingly attacked the numerous railroad bridges in country, using mainly Azon bombs (Figure 1). In just three months, from December 1944 to March 1945, the 7th Bombardment Group expended 459 Azon bombs destroying twenty-seven bridges, with approximately fifteen percent of bombs dropped recording direct hits.[94] After March 5, 1945, Japanese resistance was contained in pockets isolated from outside supplies, and Azon bombing was discontinued. Because of the linearity of Azon targets, it is not meaningful to assign this weapon a CEP value. Still, to put its performance in perspective, Azon bombs in World War II had an average azimuth error of well below fifty feet, with fifty percent hitting within twenty-one feet of target centerline.[95] Ending, as it did, on a high note in Burma, Azon emerged as perhaps

---

[92]U.S. Army Air Forces, "Azon Operations in Italian Theater," 30 April 1944, DTIC AD number B809087, 3.

[93]Ibid., 4; Boyce, *New Weapons for Air Warfare*, 261.

[94]U.S. Army Human Engineering Laboratories, "The Accuracy of the Azon Guided Bomb," 37.

[95]Ibid., 9.

the most promising American guidance technology of the war, and became the point of departure for several important projects after the war.

FIGURE 1
Bridge in Burma Destroyed by Azon

Azon's failure to make much of a splash in the main war effort in Europe did not signify a lack of interest in guided bombs by top leadership, only recognition of its current-state limitations. As mentioned above, the Aphrodite project began as a mere extension of Azon, with war weary bombers initially guided using Double-Azon control. Of course, Aphrodite plane-bombs enjoyed a few advantages over the earlier Azons, namely a second Azon receiver for pitch control, a television link to overcome the parallax problem, and the largest single mass of explosives ever launched by man against an enemy.[96] Beginning in August 1944 Azon guidance in Aphrodite aircraft began to be

[96]Headquarters, 3rd Bombardment Division, "Summary of Double Azon Project," 20 January 1945, AFHSO, Bolling AFB, D.C., file number B5529-1015, 1.

replaced by a keyed carrier FM system using eight control frequencies, called Castor. This continued expenditure of resources and effort indicates just how important the goal of perfecting guided weapons remained. An even better indicator was the high-level of attention Aphrodite received—indeed, a wealth of personal correspondence between the Army's top commanders, from Eisenhower down, divulges a preoccupation with this project in late 1944. Perhaps most telling was one top secret cable from Arnold to Spaatz inquiring: "were fighters or bombers dispatched to destroy the Castor Baby Airplane which landed intact in Germany? If so, how soon after it crashlanded and was the plane destroyed?"[97] Such exchanges clearly indicated not only the level of interest and value placed on this technology, but the fear of enemy exploitation should it be compromised.

In fact, as early as August 1943, the Germans had successfully fielded a guided bomb of their own, superior to Azon and Aphrodite in many ways. This German weapon, officially designated PC-1400X and later FX-1400, but affectionately referred to within the Luftwaffe as Fritz-X, was initially designed as a 3,500-pound anti-ship missile. Similar in principle to Azon, it was guided by radio control (although some variants were controlled by wire), using a joystick, standard bombsight, tail flare, and direct sighting. In fact, it was actually an early application of Double-Azon—or Razon, as the ongoing two-coordinate high-angle bomb project was known in America—since the Germans were able to steer Fritz-X in both range and azimuth.[98] In order to overcome the problem of parallax, it was designed as a glide bomb with small cruciform wings. By rapidly decelerating their aircraft after bomb release, German airmen allowed the bomb to sail out in front, and then attained collinearity by aligning the flare directly between the

[97]H.H. Arnold to Carl Spaatz, 18 December 1944, Box 193, Papers of Carl A. Spaatz, LOC.
[98]Walter Boyne, "Missiles Against the Roma," *Flying Review International* (February 1968): 102.

bombsight and the ship's foredeck, eclipsing the target.[99] On September 9, 1943, six German Dornier 217 bombers attacked the defecting Italian fleet in the Mediterranean with stunning success—a single Fritz-X missile struck the battleship *Roma*, sending it to the bottom, along with Italian Fleet Commander Admiral Carlo Bergamini and a crew of 1,254, in under twenty minutes.[100] That same month, the Allies experienced Fritz-X firsthand at Salerno, where it severely damaged HMS *Warspite* and the USS *Savannah* (Figure 2). With an estimated CEP of fifteen feet, and a thirty percent hit rate, the

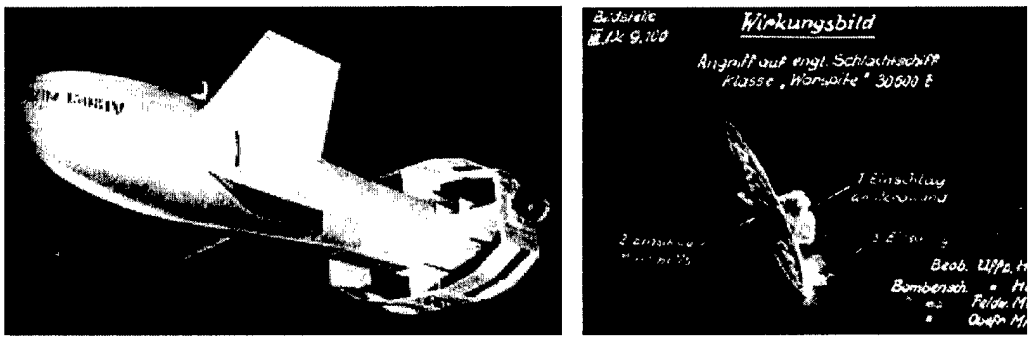

FIGURE 2
The Fritz-X (left) and German Strike Photo of Simultaneous Fritz-X Hits on the British Battleship HMS *Warspite* at Salerno in 1943 (right)

discontinued use of this weapon after 1943 is somewhat mystifying. It has alternatively been explained as the result of the Luftwaffe downplaying results to prevent a shift from fighter to bomber production or an Allied bombing raid that destroyed Germany's only Fritz-X capable squadron on the ground. Clearly, though, this encounter with enemy precision weapons, coming at a time when Azon was under pilot production, but not favorably regarded by most Army officers, served only to heighten interest and accelerate efforts in America.

[99]Boyce, *New Weapons for Air Warfare*, 264.
[100]Boyne, "Missiles Against the Roma," 107.

There is one final dimension to this wartime quest for precision that illustrates just how sought after, and at the same time, how illusive, the requisite technologies for bomb guidance were, even by 1945. Indeed, despite the nominal successes detailed throughout this chapter, actual results in terms of decisive combat effect were invariably disappointing. Even the capstone Aphrodite project, monitored with such hope by Eisenhower, Arnold, and others, received an unsatisfactory final evaluation. An Army review board concluded in part, that it was "extremely susceptible to enemy radio countermeasures," and that "requirements of ideal weather and visual contact between Mother and Baby aircraft make war weary heavy bombers without crews, controlled by FM radio and television alone, unsuitable for general use in combat."[101] Obviously, all of the major powers appreciated the value of pinpoint accuracy in eliminating high-value targets without the punishing losses associated with strategic bombardment, but the technology to achieve such accuracy eluded even the most determined. For this reason, the Japanese and others turned to biology as a shortcut to guidance technology. Although not commonly thought of as precision guided munitions, the 2,800 Japanese *Kamikaze* pilots who sank thirty-four U.S. ships and damaged 368 others, merely provided the terminal guidance for what amounted to large anti-ship bombs.[102] While Japanese scientists and engineers worked desperately to perfect thermal, radio, and other guidance techniques in the hope that technology would turn the tide of war,[103] in the end their

---

[101]U.S. Army Air Forces Board, "Use of War Weary Heavy Bombers as Projectiles: Test of Continual Control from Air Employing Television and FM Radio Link," 5 February 1945, DTIC AD Number ADB195851, 6-7.

[102]Richard P. Hallion, "Precision Guided Munitions and the New Era of Warfare." *Air Power Studies Centre Paper Number 53*. Fairbairn, Australia: Air Power Studies Centre, 1997, 10.

[103]Richard J. Samuels, *"Rich Nation Strong Army": National Security and the Technological Transformation of Japan* (Ithaca, N.Y.: Cornell University Press, 1994), 107; Akio Morita, *Made in Japan: Akio Morita and Sony* (New York: Penguin Books, 1986), 2.

advanced precision weapons like the 620 mile-per-hour, rocket-propelled "Baka" flying bomb reached their targets only at the calculated cost of one human life.[104]

Americans, unwilling to sacrifice human life in this way, nevertheless experimented with expendable animals as a means of guiding bombs. After hearing and rejecting a proposal to use dogs to steer submarine torpedoes, the NDRC began focusing on trained pigeons as pilots for guided bombs. Preliminary experiments were performed in 1941 and 1942 and produced results promising enough that Division 5 funded the project with $25,000 in 1943.[105] The ensuing guidance mechanism housed a live pigeon next to a gimbaled glass plate, upon which the target image was projected. Pigeons were then successfully trained to peck continuously at the desired spot on the "peck-plate," even amid distracting noise and discomfort. In flight, if the target image moved off center, pecking tilted the plate and a pneumatic pick-off actuated the appropriate controls to restore the bomb to its desired course.[106] However, when a final demonstration in April 1944 revealed that substantial work remained to perfect this delivery system, NDRC, in a split decision, chose to abandon the project. Bypassing the technological element even more completely, another Army project envisioned using live bats as a means of delivering small incendiary devices "precisely" to the attics and lofts of flammable Japanese dwellings, where much of the war industry had been dispersed.[107] An actual weapon, designed to encase 1,030 bomb-bat assemblies, was developed and tested at Muroc Army Air Base, California, from 1943 to 1944. Although the finished product

---

[104]*Jane's Fighting Aircraft of World War II* (London: Jane's Publishing Company, 1946; reprint, London: Studio Editions Ltd., 1989), 194.

[105]Boyce, *New Weapons for Air Warfare*, 248.

[106]Ibid.

[107]Louis F. Fieser, *The Scientific Method: A Personal Account of Unusual Projects in War and in Peace* (New York: Reinhold Publishing Corp., 1964), 121.

successfully dispersed bats—each, in a state of cold-induced hibernation, fitted with a time-delayed napalm-filled celluloid backpack—it was never used in combat.[108]

Although this narrow analysis has been focused specifically on the development of precision bombing, it clearly reveals that the prosecution of World War II epitomized the previously established American way of war, depending upon a strategy of annihilation and the efficient employment of technology to defeat the enemy. In a war more total than any before or since, wartime exigencies and the vast resources of the United States combined to produce innovative technologies in unprecedented quantity and scope. In the realm of air power, Americans obviously believed that more and better technology might mitigate the bloodshed intrinsic to the strategy of annihilation. This belief was first manifested in the doctrine of daylight precision bombardment. However, as the war progressed, aerial bombardment proved an illusive ultimate weapon, but one that seemingly needed only improved accuracy in order to produce decisive effects. The quest for an ultimate air weapon in World War II began with the Norden bombsight, Boeing B-17 and other prewar technologies, but rapidly transmogrified along a thousand technological paths to produce radar bombsights, precise radio-navigational bombing aids such as *Gee* and *Oboe*, blind bombing systems like H_2X, the varied guided bombs and missiles discussed above, and so much more.

Ironically, by war's end the ultimate air weapon turned out to be the antithesis of precision bombing, as airmen resorted to area bombing of German and, especially, Japanese cities. Despite the use of a Norden bombsight for its delivery, the first atomic bomb dropped on Japan missed its aiming point by 800 feet—the fact that this error went

[108]Ibid., 133.

unnoticed is an indication that accuracy had lost relevance. However, the quest for precision prior to 1945 was far more than a mere historical footnote. The at best semi-successful attempts to develop precision guided munitions in World War II ushered in the first use of such weapons in combat, provided a foretaste of the precision weapons of the future, and helped identify and more precisely define those technological shortfalls that had prevented the dream of precision from becoming a reality. As one participant put it, "solutions of some of the difficulties inherent in all guided missiles have been reached, while some of the problems remaining unsolved have been more precisely defined."[109] Given the persistent and pervasive efforts at guidance in the past, what remained to be seen was whether or not these roots would sprout branches and bring forth fruit in the future. Put another way, what contributions, if any, precision guided weapons would make to national security remained largely to be seen in 1945.

[109]Boyce, *New Weapons for Air Warfare*, 244.

3. – Air Power in the Aftermath of World War II

On March 29, 1951, three B-29 bombers from the 19th Bombardment Group in Japan joined a larger group of American bombers for what appeared to be a routine combat mission against targets in North Korea. In fact, their specific objective that day was to sever the international rail and highway bridges linking North Korea and China at Sinuiju. This particular mission was unique, however, in that the larger force of bombers served primarily as a cover for the three aircraft of the 19th Bomb Group. These specially modified planes, it was hoped, would be able to destroy the bridges at Sinuiju unaided, for each carried a single bomb capable of inordinate accuracy and destructive power. This Far Eastern Air Force group, unlike other bomber units, included a special projects section, and had been testing a newly deployed secret weapon for the previous three months. On this particular day, encouraged by a successive string of six single-sortie successes, it was decided to attempt a highly important mission using three of the new bombs in concert. The participation of the group commander himself, Colonel Payne Jennings, as one of the pilots, was a fair indicator of the mission's magnitude. Unfortunately, once airborne, things began to unravel quickly. Of the trio, only one B-29 actually got through to the Yalu River—once there, it not only lost control of its guided bomb, missing the target, but sustained such extensive damage from defenders that it was forced to divert to the nearest American base following the attack. Of the remaining two, a broken oil line forced one to abort and return to base, while the other suffered the worst fate of all. Crippled prior to reaching Sinuiju, the group commander's aircraft limped out over Korea Bay for an attempted ditching in the Yellow Sea. However, once again an imperfect developmental precision weapon proved fatal to its unwitting crew when the

unexplained detonation of this 12,000-pound bomb incinerated bomber number three and all aboard before they even made contact with the water.[1]

Postwar Air Power

The United States of America emerged victorious from World War II in 1945 with its democratic institutions and values intact. However, in the war's aftermath it became obvious that some very fundamental changes had occurred. For one thing, in the course of achieving victory, the American approach to war was irrevocably altered. For example, air power had played such a decisive role in the defeat of Germany and Japan that it could never again be considered incidental. Even setting aside for a moment the ongoing controversy over the efficacy of the Combined Bomber Offensive in Europe, unprecedented reliance upon air power in the Second World War marked a significant turning point in military history. Never before had an air offensive brought about the defeat and surrender of a great power still in possession of a strong and unbeaten army—yet that is essentially what happened in the Pacific theater.[2] Of course, the creation and use of atomic weapons brought a potency to air power and a totality to warfare that eclipsed all previous forms of military force, making the United States, at least for the time being, a military superpower without equal. As it grappled with the implications of its vastly increased air power and struggled to formulate a strategy for harnessing this new technology to obtain specific national security objectives, the revolutionary nature of the A-bomb became abundantly obvious.

[1]Air Proving Ground Command, "Combat Employment of Tarzon and Razon Guided Missiles," 31 August 1951, AFHRA, Maxwell AFB, Ala., file number K240.01 vol. 3, 5; see also USAF Historical Division, *United States Air Force Operations in the Korean Conflict, 1 November 1950 - 30 June 1952*, 1 July 1955, AFHRA, Maxwell AFB, Ala., file number 101-72, 141.

[2]Robert Saundby, *Air Bombardment: The Story of its Development* (New York: Harper & Brothers, 1961), 214.

One of the first manifestations of the A-bomb's dramatic effect on national security objectives and policies came with the postwar military drawdown and restructuring. In the years immediately following the war, Army and Navy budgets and manpower were repeatedly slashed, leaving only a tiny fraction of their wartime strength by 1947.[3] Similar military reductions had followed previous American wars, and were, to a certain extent, expected. What made the drawdown of the late 1940s unique was the extent to which air power overshadowed all other military missions, seemingly rendering venerable mainstays of national defense irrelevant. Advocates for independence within the Army Air Forces argued persuasively that air power alone would quickly and easily win future wars, and that the other services, lacking the ability to deliver "the bomb," would necessarily assume a secondary role.[4] As the military services debated their respective roles in the nation's defense network, Congress took two crucial steps with the passage of the National Security Act of 1947 and National Security Amendment of 1949. The first created, among other things, an independent U.S. Air Force, co-equal in status to the other armed forces, while the second established the Department of Defense as an executive department with full cabinet rank. One might assume the Army would vigorously oppose such a restructuring, a clear evisceration of its air power capability—in fact, its leadership acquiesced, fearing the air element, if retained, would take over.

Although policymakers had hoped those reorganization acts would end the bitter interservice rivalries, the squabbling continued unabated with the newly created players,

---

[3]According to James M. Morris, *America's Armed Forces: A History* (Upper Saddle River, N.J.: Prentice Hall, 1996), 295, Army manpower dropped from a peak strength of 8 million to 980,000 by 1947, while Navy manning levels dropped 90% from their wartime high, to just 375,000. Similarly, the Navy's budget of $45 billion in 1946 was reduced to $14.5 billion in 1947.

[4]Ibid., 296.

the Air Force and Secretary of Defense, playing leading roles. Not surprisingly, Air Force leaders contended that the new B-36 intercontinental bomber, armed with atomic bombs, was the single best guarantor of national security. Because a defense strategy built around those technologies offered tremendous manpower and budget savings, then Secretary of Defense Louis A. Johnson allied himself with the Air Force, cancelled construction of the Navy's proposed supercarrier, USS *United States*, and proposed trimming the fleet's active carriers from eight to four. However, during the ensuing "revolt of the admirals," the Soviets exploded an atomic device of their own, bringing an end to America's brief nuclear monopoly. The possibility of nuclear stalemate highlighted the ongoing need for conventional forces to serve the nation's defensive needs.[5] Of course, atomic weapons continued as the centerpiece of American defense strategy throughout the remainder of the Cold War, but after 1949 they were clearly no longer "necessary and sufficient" components of national security, and other military technologies were more vigorously pursued. The conventional, limited war fought in Korea beginning the following summer only accelerated such pursuits.

The foregoing description of the postwar drawdown and transition to reliance upon atomic weapons is somewhat deceptive, implying a technological stagnation between World War II and the Korean conflict. In actuality, tremendous advances in technology were realized during this period. Specifically, in the realm of air power, innovations in aerodynamics, propulsion, and munitions resulted in an Air Force by 1950 equipped with jet aircraft, capable of supersonic flight, and shortly thereafter armed with thermonuclear

[5]Ibid., 298.

warheads.[6] The creation of such formidable air power technology, particularly during a period of fiscal restraint, was hardly coincidental. From its very inception, the U.S. Air Force was inseparably linked to technology. Unlike its parent organization, the Army, for which machines merely supported ground operations, technology was at the very heart of the Air Force's existence as an institution. As pointed out in the previous chapter, the air services of all the major powers continuously sought advanced technology to increase the lethality of air power throughout both world wars and the interwar period. This quest for decisive technology did not cease with the end of hostilities in 1945, nor were these historical antecedents ignored in postwar research and development. In fact, as the war effort drew to a close, America's top airman, General Henry H. Arnold, turned to longtime acquaintance Theodore von Karman, the eminent Hungarian émigré and director of the California Institute of Technology's Guggenheim Aeronautical Laboratory, to help forecast decisive Air Force science and technology for the decades to come. The resulting report, *Toward New Horizons*, and organization, the Air Force Scientific Advisory Board, have endured as models within a military that has assiduously sought to forecast the future of aerospace technology.[7]

What stagnated following World War II was not technology at all, but rather air power doctrine. Although a somewhat elusive and intangible concept, doctrine nevertheless plays a critical role in shaping a military's actions and preparations for war. As defined by the current Air Force doctrine manual, doctrine is a statement of "the most

---

[6]See, for example, Edward W. Constant III, *The Origins of the Turbojet Revolution* (Baltimore: Johns Hopkins University Press, 1980) and Richard P. Hallion, *Supersonic Flight: Breaking the Sound Barrier and Beyond* (New York: MacMillan, 1972).

[7]Michael H. Gorn, *Harnessing the Genie: Science and Technology Forecasting for the Air Force, 1944-1986* (Washington, D.C.: Office of Air Force History, 1988), v.

fundamental and enduring beliefs that describe and guide the proper use of aerospace forces in military action."[8] In essence, it is a military organization's understanding and philosophy, based on experience to date. Given that the five-year British and American air campaign of World War II had not uniformly supported the claims of prewar air theorists that air power would be the decisive weapon of the next war, doctrine rightly deserved to be scrutinized and modified based on wartime experience. However, rather than applying the many crucial doctrinal lessons of the war that were directly applicable to air power employment in the postwar world, early Air Force doctrine was based on the assumption that the advent of nuclear weapons had, in fact, finally enabled air power to achieve the level of effectiveness claimed by its prophets in the 1920s and 1930s.[9] Neglecting the practical lessons of World War II, airmen adopted an arrested doctrine that once again convinced them to look to available technology to provide a unique, aerial form of warfare that invalidated traditional attributes of military power. So, for example, despite the obvious wartime importance of tactical air power in both the Combined Bomber Offensive and the direct support of ground and naval forces, prominent postwar Air Force leaders argued that the advent of nuclear weapons would leave little use for fighter aircraft in future warfare.[10]

Given the Air Force's nuclear-centric postwar doctrine, which represented something of a return to the comforting theories of Giulio Douhet and Billy Mitchell, together with the severe scarcity of resources caused by the retrenchment of the late

---

[8]U.S. Department of Defense, *Air Force Basic Doctrine: Air Force Doctrine Document 1* (Maxwell AFB, Ala.: Air Force Doctrine Center, 1997), 2.

[9]Williamson Murray, "Air Power Since World War II: Consistent with Doctrine?," in *The Future of Air Power in the Aftermath of the Gulf War*, ed. Richard H. Shultz Jr. and Robert L. Pfaltzgraff Jr. (Maxwell AFB, Ala.: Air University Press, 1992), 96-97.

[10]Ibid., 99.

1940s, it is a wonder that America retained any conventional air power capability on the eve of the Korean War, let alone the innovative jet-age technology discussed above. Some have erroneously suggested that much of the technology introduced in Korea was the result of last-minute wartime research and development. In actuality, most of the innovative weapon systems of the war were conceived of and developed, albeit frequently in very modest numbers, well before the summer of 1950. The reason for this seeming incongruity between doctrine and armament harks back to the previously highlighted tension between resistance to new weaponry and the desire for an ultimate weapon. This tug-of-war between technophile and technophobe seems to have been won by the former during the course of the Second World War, no doubt as a result of the almost unassailable evidence that technological advantage repeatedly proved decisive. As one respected historian of technology explained:

> Military officers were traditionally viewed as technologically conservative, often preparing to fight the last war with yesterday's weapons. Since World War II they have been seen as technological enthusiasts, trading yesterday's weapons for tomorrow's without exploiting the former or understanding the latter.[11]

This has been especially true of the postwar Air Force leadership. In its enthusiasm for new and better technology, the new Air Force frequently pursued developmental projects that were driven not by doctrinally underpinned requirements, but merely by technological capability. One example of that rampant technological opportunism occurred in the area of new aircraft development, where the pace following World War II was blistering. A visitor to Edwards Air Force Base, California, in 1947, for example,

[11]Alex Roland, "Technology and War," in *Military Enterprise and Technological Change: Perspectives on the American Experience*, ed., Merritt Roe Smith (Cambridge, Mass.: The MIT Press, 1985), 373.

would have been surprised to see the simultaneous flight testing of the straightwing, air-launched, rocket-propelled Bell XS-1 and the sweptwing North American XP-86 jet, two diverse developmental projects both capable of supersonic flight. Within the next three years, a host of other experimental aircraft, including the Bell XS-2, Douglas XS-3, Northrop XS-4, Bell X-5, Boeing XB-47, and Convair XP-92 would similarly take flight above the southern California desert.[12] In addition, between 1945 and 1950 Air Proving Ground Command at Eglin Air Force Base, Florida tested a correspondingly wide variety of developmental armaments. While many of these munitions were, in keeping with postwar doctrine, nuclear (and by 1951 thermonuclear), it will be obvious by the close of this chapter that there were adequate resources for a whole bevy of conventional—including guided—bombs as well.

The Army and Navy, despite seriously diminished budgets, also focused considerable effort on new weapons development, including precision guidance technology. Even before the Army lost its air arm, there were concerns about the Air Force's ability to effectively provide close air support for front-line troops. Aware of National Defense Research Committee involvement in the Azon and Razon projects, the Army submitted an urgent request in the latter stages of World War II for some means of providing close-support bombing without endangering friendly troops on the ground. In response, NDRC contracted L.N. Schwien Engineering Company to design and built a ground-controlled bomb. Essentially a Razon controlled from the ground, the project involved slight modifications to standard gun battery observation telescopes so that two

[12]Richard P. Hallion, "The Air Force and the Supersonic Breakthrough," in *Technology and the Air Force: A Retrospective Assessment*, ed. Jacob Neufeld, George M. Watson Jr., and David Chenoweth (Washington, D.C.: Air Force History and Museums Program, 1997), 59-60.

ground observers, one each for range and azimuth, could preset the desired flight path of the bombs and then steer them along that path. Unfortunately, Razon was completed and tested too late in the war to allow completion of this wartime initiative.[13]

In 1947 the Marine Corps pressed the Navy Bureau of Ordnance for a similar system, asserting that it "needed a weapon with extreme accuracy capable of quickly destroying enemy strong-points near the front lines that cannot be readily attacked or eliminated by conventional weapons."[14] Specifically considered and found wanting during the investigation phase of the project were field artillery, naval gunfire, rocket bombardment, and, significantly, aerial bombardment. Among the shortcomings ascribed by the Marines to this last close-support method were difficulties in target identification, weather limitations, delayed response, and the notation "precision of bombing accuracy far from reliable," an obvious concern to ground troops situated closely to intended targets.[15] In order to overcome these limitations, the Bureau of Ordnance contracted with Cornell Aeronautical Laboratory to design a guided missile that could be launched from a rear position onto a target specified by a forward observer, with a CEP of fifteen feet. Cornell's proposed solution, Operation Lacrosse, consisted of an optical range finder, optical tracking sight, missile-to-observer radio ranging equipment, radio control equipment, a computer, and a high subsonic winged-type missile carrying a 500-pound shaped charge warhead. In principle, when situated at an observer post 1,000 yards from the target, Lacrosse equipment would determine the three variables of distance to target

[13]Joseph C. Boyce, *New Weapons for Air Warfare: Fire-Control Equipment, Proximity Fuzes, and Guided Missiles,* Science in World War II—Office of Scientific Research and Development (Boston: Little, Brown and Company, 1947), 266-67.

[14]Cornell Aeronautical Laboratory, "Lacrosse Final Report," 1 August 1950, NARA II, College Park, Md., Record Group 341, Box 301, 3.

[15]Ibid.

(optical range), distance to missile (radio range), and angle to missile (optical sight), sufficient to solve the triangle formed by missile, observer, and target (Figure 3). Once determined, computing would take place at the ground station and the necessary homing signals transmitted by radio link to the missile.[16]

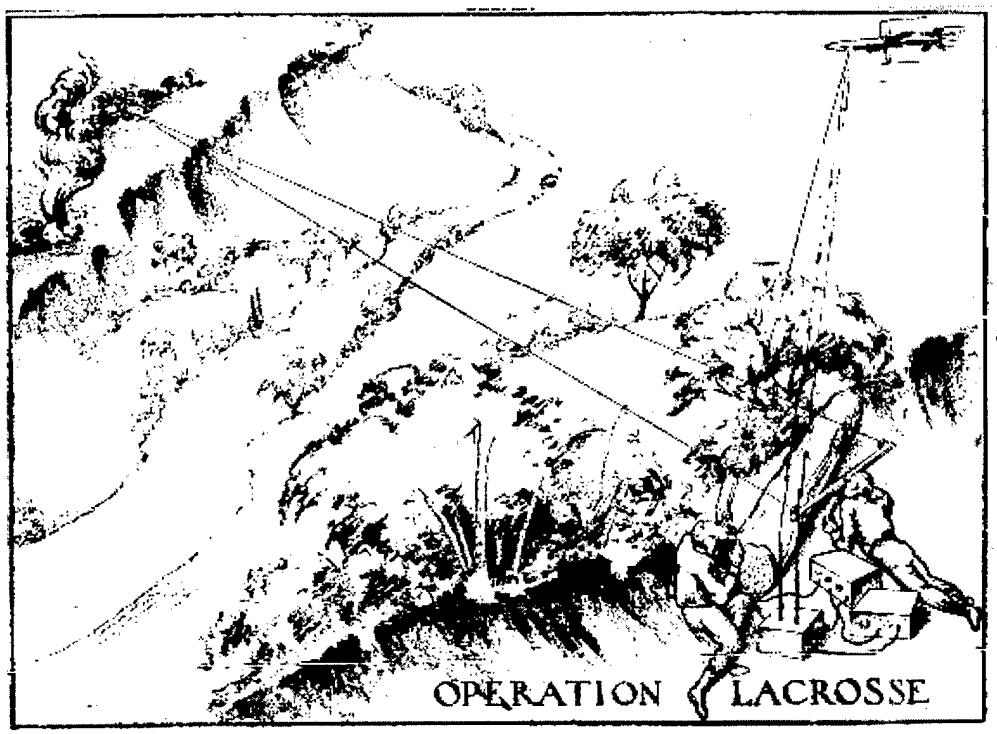

FIGURE 3
Lacrosse Close Air Support Guided Missile Concept

The fact that ingenious new weapons were designed and developed in the late 1940s does not imply that they were available for use in combat when hostilities erupted in Korea in 1950. For one thing, the cost of developing and testing such weapons was a small fraction of the amount needed to manufacture and field them. Given the severe budget constraints of the day, very few of these developmental projects entered the inventory, and then only in modest numbers. Of course, doctrine, then as now, proved a

[16]Ibid., 70.

considerably more powerful determinant than budget when it came to selecting technologies for actual production. Given doctrinal conceptions preoccupied almost exclusively with nuclear war, and emphasizing quantitative factors to the exclusion of almost everything else, it is hardly surprising that such conventional weapons went largely ignored. Indeed, the full potential value of technological innovation can never be exploited unless prevailing doctrine is modified to embrace it.[17] The Korean War, when it came, underscored serious weaknesses in Air Force doctrine, and a corresponding inability to parlay exceptional technology into quick, decisive victory.

Air Power in Korea

Even though North Korea's invasion of South Korea took place a scant five years after the cessation of World War II hostilities, the American military was ill-prepared to wage war in the aftermath of June 25, 1950. More specifically, as one renowned historian concluded: "the Korean War turned into an air war for which American air power was generally unprepared. Across the board, from aircraft to training to doctrine and employment concepts, the USAF had to relearn many of the lessons of World War II."[18] However, this should not be misconstrued as implying that air power played no significant role in the early stages of fighting, for such was emphatically not the case. In fact, American airmen quickly established general air superiority over the Korean peninsula, allowing B-29 bombers based in Japan to embark upon a strategic bombing campaign, while forward-based fighter aircraft provided critical support for the retreating, and then counterattacking, U.S. ground forces, contributing immeasurably to the collapse

[17]I.B. Holley Jr., *Ideas and Weapons* (New Haven, Conn.: Yale University Press, 1953), 14.
[18]Murray, "Air Power Since World War II," 100.

of Communist forces around the Pusan perimeter in September. Appreciative of the role played by air power during these tenuous first months of fighting, Lieutenant General Walton H. Walker, the venerable commander of the Eighth Army, flatly stated that, "if it had not been for the air support that we received from the Fifth Air Force we would not have been able to stay in Korea."[19]

With a preponderance of its resources geared toward the strategic bombardment mission, the Air Force had few frontline fighters to carry out these vital support missions. However, bombers played a very restricted role early on in Korea because of the limited extent of North Korea's industrial capacity, which provided few targets for strategic bombing, and the limits imposed on the U.S. military to prevent the expansion of the war into a dangerous escalation involving the Chinese, Soviets, and possibly nuclear weapons. As noted, there were jet aircraft in the inventory prior to 1950, but following the swift destruction of North Korea's air force during the first months of the war, military pundits at every level began debating whether the tried and true Air Force Mustang and Marine Corsair might not be better aircraft than the early Shooting Star jets. However, the appearance in Korea of the Soviet-built sweptwing MiG-15 on November 1, 1950, ended that debate abruptly, forcing America to rush production and deployment of modern jet aircraft for Korea.[20] And, while the subsequent battle for air superiority has generally been ceded to the Americans, historians are quick to point out that the decisive edge in air-to-air combat came from superior training and experience, rather than technology, and proved insufficient to safeguard daylight B-29 strikes against North

[19]Robert Frank Futrell, *The United States Air Force in Korea, 1950-1953* (New York: Duell, Sloan and Pearce, 1961), 139.

[20]Ibid., 230; as a stopgap, one wing each of F-86 Sabrejets and F-84 Thunderjets were immediately ordered to Korea.

Korean targets, which were discontinued midway through the war.[21] In any event, air superiority, the oft-touted trump card of the Korean War, was a strategically defensive role, and hardly a means for bringing the war to an end.

Strategically offensive air power missions, which did play a crucial role in stabilizing the front following the intervention of Chinese forces in November of 1950, by themselves also proved incapable of defeating the enemy. The appropriateness of such a goal—autonomous aerial victory—might well be debated, but it had clearly been an overriding Air Force commitment since emerging from the Army's shadow in the 1930s. Given the bitter interservice bickering of the late 1940s, and subsequent emergence of an air-dominated national security policy, it should come as no surprise that Korea was viewed as a critical proving ground. In a letter to the Chief of Staff in June 1951, for example, Far East Air Forces Commander General Otto Weyland asserted that Korea offered a golden opportunity for the Air Force to demonstrate its ability to win a conventional war through its own efforts, and he urged service support to "fully exploit the first real opportunity to prove the efficacy of air power in more than a supporting role."[22] Of course, the air war was complicated by politics on multiple levels. For the first time, all four of the armed services were directly involved in the same combat zone, and at stake were not merely bragging rights for the decisive branch, but influence over military budgets and national strategies for years, perhaps decades, to come.[23] So, while General Douglas MacArthur, the overall commander in the Far East, fixed air superiority as one of his first campaign objectives, and praised the tactical air support given his

[21]Murray, "Air Power Since World War II," 102.
[22]Ibid.
[23]Dennis E. Showalter, "The First Jet War," *Military History Quarterly* 8 (Spring 1996): 423.

ground troops in Korea as unequaled in the history of modern war, he subsequently reported to Congress that "it is quite evident to anybody that is acquainted with war that determined ground troops cannot be stopped alone by air."[24] Not surprisingly, the early fighting in Korea was largely determined by a ground-based strategy.

Despite that strategy, Weyland's desire to prove the efficacy of independent air power resulted in a massive interdiction campaign aimed at isolating the battlefield from its Chinese-based support. Given an air force whose doctrine and commanders exhibited a longstanding aversion to tying aircraft too closely to ground operations, obviously much of the air support given to United Nations ground forces in the early months of the war came in the form of battlefield interdiction. And, since the North Korean invaders depended for logistical support upon a lengthening artery of motorized transport, crowding South Korea's limited roads, U.N. air power proved a serious hindrance to the enemy offensive, destroying literally thousands of vehicles during the first months of the war. Once the front stabilized in early 1951, with the Chinese and North Koreans constructing increasingly elaborate defenses, air support of ground troops became much less effective, prompting an even greater shift to interdiction. The result, Operation Strangle, targeted roads and railways in an attempt to choke off Chinese and North Korean lines of supply, communications, and reinforcements. To its credit, the interdiction campaign probably prevented the Chinese from amassing sufficient supplies to launch another great offensive, and diverted vast amounts of enemy manpower for the perpetual repair of its damaged transportation system. Because the Communists moved most supplies by truck and train at night, remaining hidden by day, attention quickly

[24]Futrell, *USAF in Korea*, 655.

focused on the vulnerable points in the supply line—the bridges and tunnels.[25] Once again, precision bombing moved to center stage.

Obviously, destroying bridges, tunnels, or individual locomotives and trucks from the air required extreme accuracy. Drawing upon the lessons of World War II, the Air Force relied heavily upon fighter-bomber aircraft such as the straightwing Republic F-84 Thunderjet to destroy such pinpoint targets using dive-bombing, and in some instances glide-bombing, for weapons delivery. Experience from the previous war revealed that although dive-bombers carried much lighter bombs than did the heavy bombers, they could achieve far greater accuracy. However, in order to realize this enhanced precision, dive-bombers had to contend with and overcome two formidable challenges. First, a considerable amount of skill and talent on the part of the pilot has always been a prerequisite to effective dive-bombing. This stems from the rather exacting set of flight parameters that must be simultaneously maintained at bomb release in order to strike a specific impact point. So, even with the technological assistance of a reliable sighting device—usually the gunsight in dive-bombing—only by meticulously conforming to a prescribed altitude, airspeed, and dive angle could a direct hit be achieved. The degree to which piloting skill determined the outcome of dive-bombing is evident from one World War II report on fighter-bomber accuracy, wherein the analyst concluded "it may be conjectured that a large portion of the hits obtained are due to a relatively few pilots, while the rest are, in the words of one pilot, 'lucky to hit Germany.'"[26] In order to destroy important targets during the interdiction campaign in Korea, the Air Force

[25]Showalter, "The First Jet War," 429; Murray, "Air Power Since World War II," 102.

[26]"Report No. 80—Fighter/Bomber Accuracy, August 1944," 21 December 1944, Box 76, Papers of Carl Spaatz, LOC; as stated in its introduction, this "report is an attempt to evaluate the accuracy of bombing by fighter aircraft of the IX Tactical Air Command during Aug 1944."

compensated for small bomb loads and varying pilot skill levels by attacking en masse, sometimes striking a single target with an entire flight, squadron, or group of aircraft.

The second significant challenge to accurate dive-bombing stemmed from its necessarily increased proximity to the ground. Even the most skillfully delivered bomb is subject, once released, to the unpredictable forces of aerodynamic drag, wind, air density, gravity, and separation effects caused by airflow around the aircraft. The magnitude of the error caused by these forces is directly proportional to the distance the bomb travels before impact, or slant range. In order to minimize the slant range during bombing, it was not unusual for fighter-bombers in Korea to roll in on a target from 15,000 feet, descend rapidly at a steep dive angle, and release bombs at an altitude of approximately 5,000 feet. To achieve even greater accuracy, at least one unit, the 136th Fighter-Bomber Group, employed glide bombing tactics, rolling in on the bomb pass at 5,000 feet with a twenty to thirty degree dive angle, and pulling out no lower than 1,000 feet—well within the range of surface guns.[27] As expected, such tactics inflicted considerable damage upon high-value targets in North Korea, but at considerable cost. During Operation Strangle some 350 fighter-bombers were destroyed, and another 300 damaged, almost all by ground fire.[28] Factoring in the increasingly effective antiaircraft defenses (much of it radar-controlled), along with the challenges of mountainous terrain, obscurant weather, and camouflage, not surprisingly air power was never able to knock out enough lines of transportation to completely strangle the Communist logistical system. As a result, the Chinese and their North Korean allies were able to keep up their tenacious, punishing war

[27]Unpublished personal history of Clinton G. Gillespie, Colonel USAF Retired, 20 July 1985, Personal Files of author, 36.

[28]Showalter, "The First Jet War," 429.

along the 38th parallel for two more years. In an attempt to remedy this situation, air leaders again turned to guidance technology to perfect precision bombing in Korea.

Guided Missiles in Korea

As with aircraft design, guided weapons development did not cease in the aftermath of World War II. In fact, Allied and German progress in the latter stages of the war appeared so promising that a number of related projects were contracted by the U.S. military throughout the late 1940s. Not surprisingly, much of the emphasis within the munitions community in the early postwar period remained on further development and testing of atomic weapons. However, following the Operation Sandstone atomic bomb tests of early 1948, Air Proving Ground Command reorganized several of its units returning from the Marshall Islands to create a 750-man group dedicated to the acquisition of guided weapons. Based at Eglin Air Force Base, in the Florida panhandle, the 1st Experimental Guided Missiles Group was specifically charged to develop tactics and techniques for guided missile operations. Although the term "guided missile" conjured up images of exotic weaponry that clearly captured the imagination of neighbors in nearby Fort Walton Beach (Figure 4), as used in the postwar period, it designated the limited mix of existing guided weapons, all of which had pre-1945 antecedents.[29]

In fact, by December 1948 the Group was conducting proving demonstrations on four distinct guided weapons, only one of which was a self-propelled missile. However, the one thing that all four did have in common was the implementation of radio control for guidance. The most "missile-like" weapon under test, the JB-2, was simply an

[29]Air Proving Ground Command, "History of 1st Experimental Guided Missiles Group" 31 December 1948, AFHRA, Maxwell AFB, Ala., file number GP-MI-1-HI, 4-6.

American adaptation of the German V-1, or "Buzz-Bomb." Powered by a pulse-jet engine, this short-range, high-explosive missile was modified to allow launch from a parent aircraft and adapted to guidance either by preset data or remote radio control while in flight. Capable of a fifty-mile range at speeds up to 440 miles per hour, the fact that the JB-2 was never fielded was more a function of its inaccuracy, which was in the half-mile range, than the mere result of budget constraints.[30] Another Guided Missiles Group

"Army Guided Missile Base? I want to talk to the guy who's doing the guiding!"

FIGURE 4
Humorous Public Reaction to Guided Missile Testing in Florida (1949)

project that likewise never saw production was Project Banshee. Hoping to prove that "a pin-point target can be precision-bombed by remote control, at a very long range from an

[30]Ibid., 8.

operating base," Banshee underwent operational testing beginning in February 1949. Using equipment designed and fabricated by General Electric and RCA, airmen were able to fly a B-29 aircraft two thousand miles and drop a bomb on a target by remote control, using two airborne navigation stations.[31] Despite achieving "excellent" results on several test flights, it became clear that the electronic equipment still suffered from technical difficulties. Beyond this, even at its best Banshee could hope to achieve an accuracy no better than a manned B-29 bomber.

Not all of these early postwar test projects ended in obscurity—in fact, two survived to see not only quantity production, but actual combat in Korea. Classified as air-to-surface missiles, these two weapons were a continuation of the wartime high-angle bomb project, and bore the designation "VB" for vertical bomb. Similar to the VB-1 Azon, discussed in the previous chapter, the VB-3 Razon bomb consisted of a free falling M-65 1,000-pound general-purpose bomb, fitted with a special tail section for guidance. Like Azon, the tail's central shell contained the equipment necessary to receive transmitted radio signals from the aircraft and apply the appropriate control surface movements. However, in place of cruciform fins, the Razon tail employed a pair of in-line octagonal shrouds—the rearmost containing the elevators and rudders that allowed the bomb to be controlled in both azimuth and range—mounted on struts containing roll stabilization surfaces (Figure 5).[32] In practice, Razon was controlled by a bombardier using a method reminiscent of earlier Azon and Fritz-X deployment, namely by means of a flare attached to the bomb's tail and superimposed upon the target through the optics of a bombsight.

---

[31]Ibid., 4, 11.

[32]Air Proving Ground Command, "Operational Suitability Test of the Razon Bomb for Night Tactical Air Attack," 3 February 1953, DTIC AD number 004360, 5.

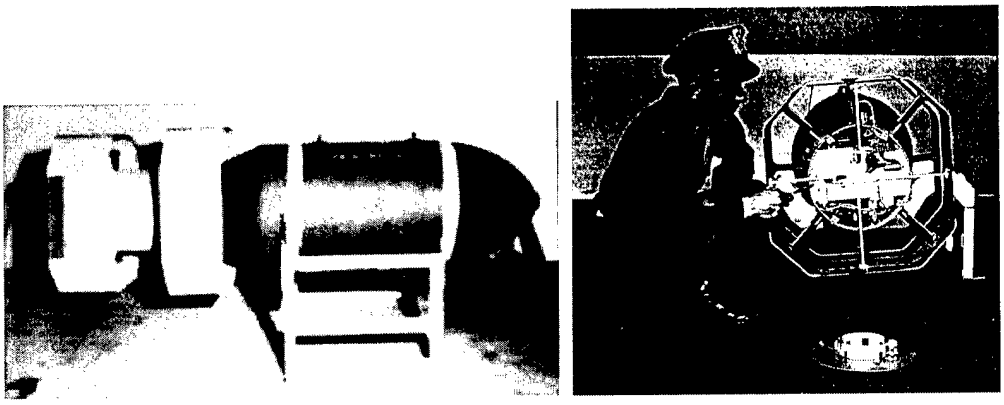

FIGURE 5
Razon Profile (left) and with Tail Control Mechanism Exposed (right)

In order to remedy the parallax problem that had plagued wartime engineers' attempts at range guidance, the M-series Norden bombsight was modified with a clever "crab" and "jag" attachment. The "crab" portion of this device consisted of a mirror placed between the target mirror and the telescopic lens system of the bombsight. This mirror not only projected an image of the flare onto the target mirror, but calculated the correct time of fall when the trail angle set into the sight was aligned exactly with the angle of the "crab" mirror setting. In principle, this allowed the bombardier to simply superimpose the flare image on the target throughout bomb descent using a radio control joystick. However, because any movement of the bomb's control surfaces during the drop caused a variation in the time of fall, affecting range, the "jag" attachment was introduced to compensate for this effect by changing the rate set into the bombsight each time course corrections were made.[33] In theory, by keeping the images of the flare and target in perfect collimation throughout the trajectory of the bomb, via radio control, a bombardier could score a direct hit with Razon virtually every drop. In actuality, testing

[33]Ibid., 5.

still showed Razon to be far more accurate in azimuth than range. For example, of the eight bombs tested in August 1948, fully three out of four had an azimuth error of zero, while the average range error was almost 200 feet. Only one of the eight scored a direct hit.[34] Still, Razon bombing showed enough promise in early testing that approximately 500 tail assemblies were produced by Union Switch and Signal Company and stockpiled, allowing their use in the early months of the Korean War.

Although development and testing of a second vertical bomb, the VB-13 Tarzon, trailed Razon, it too had its roots in the World War II high-angle dirigible bomb project. Realizing that some of Azon's deficiencies in accuracy could be negated through increased firepower—in this case, bomb tonnage—Gulf Research and Development Corporation received Army authorization in February 1945 to investigate the aerodynamic aspects of the problem of control of larger bombs. Simple scaling up of Razon proved unsatisfactory, since the deflecting forces on a given bomb increase with the square of the diameter, while the mass to be controlled increases as the cube of the diameter. A larger bomb thus required disproportionately larger control surfaces, which, in turn, magnified the problem of range error due to variation in time of fall, and limited in number and placement its carriage by existing bombers. Several preliminary models were built in mid-1945 but failed to reach combat, and by 1947 the NDRC was still of the opinion that "future developments in this field will require considerable fundamental research."[35]

As a matter of fact, at the time the NDRC report was issued, Bell Aircraft Corporation had already developed a working solution involving a bomb an order of

[34]Air Proving Ground, "History of 1st Experimental Guided Missiles Group," Appendix 7.
[35]Boyce, *New Weapons for Air Warfare*, 267.

magnitude larger than Azon and Razon. Once again following technological precedent, Bell designed only a bomb tail guidance assembly to be mated to an existing bomb. In order to gain the full advantages of increased yield, however, the warhead selected for this project was the British "Tallboy," a 12,000-pound bomb in use by Bomber Command by 1944, and procured by the Air Force as the general-purpose M-112 bomb following the war. The name of the resulting guided missile, Tarzon, was arrived at as a clever-sounding pseudo-acronym combining *Ta*llboy, *r*ange, and azimuth *on*ly. In order to produce sufficient force to steer Tarzon without introducing giant fins that would exceed a standard bomb bay, Bell attached a lift ring to the warhead around the bomb's approximate center of gravity. The effect of this ring shroud was to amplify greatly directional changes introduced by the tail surfaces, much like the wings of an airplane. However, this ingenious solution to heavy bomb guidance was not itself without antecedent. In order to adapt its NDRC-sponsored Roc radar-guided bomb to naval aircraft in 1944, Douglas Aircraft Company had replaced large crossed wings with a ring shroud, greatly reducing its cross-sectional area (Figure 6).[36] Even so, Tarzon, measuring twenty-one feet in length, four and one-half feet in diameter, and with a gross weight of 13,000 pounds, could be dropped only by a specially modified B-29 Superfortress with cut-outs in the bomb bay doors, and was limited to a single bomb per aircraft sortie.[37]

In virtually every other respect, Tarzon was an enlarged version of Razon. For example, its tail section consisted of an octagonal shroud containing pitch and yaw

[36]Ibid., 237; named for the mythical bird that sank Sinbad's ship with a boulder dropped from its talons, the Roc project never culminated in combat use, but pioneered numerous guidance innovations.

[37]Research and Development Board, "Presentation of Air Force Tarzon Project," 29 March 1951, NARA II, College Park, Md., Record Group 330, Box 396, 3; in contrast, a B-26 medium bomber could carry four Razons, and a B-29 could carry eight, enabling multiple target attacks per sortie.

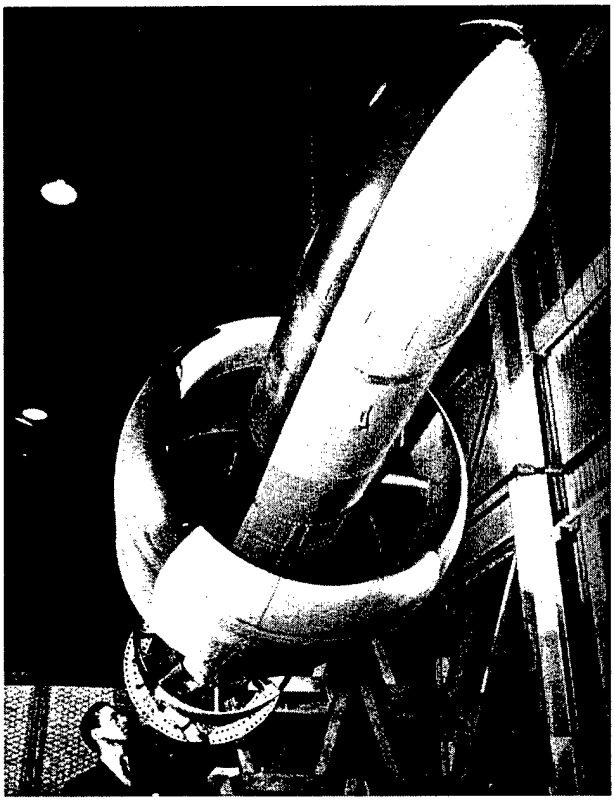

FIGURE 6
Douglas Redesigned Roc Foreshadowed Later Tarzon Design

control surfaces, connecting struts with roll stabilization surfaces, a flare cone, and a center section containing the radio receiver, gyroscope, batteries, and servomotors. Guidance equipment aboard the launching aircraft similarly consisted of a radio transmitter slaved to a two-axis control stick, and a Norden M-series bombsight modified with "crab" and "jag" attachments.[38] Although development of Tarzon lagged Razon by several years, testing of the two bombs was performed concurrently in 1948-1949 by the 1st Experimental Guided Missiles Group. However, because of its increased size and cost, and retarded development, far fewer Tarzon bombs were dropped on Eglin test

[38]Air Proving Ground Command, "Operational Suitability Test of the Tarzon Air-to-Surface Guided Missile," 13 August 1951, DTIC AD number B193076, 5-6.

ranges during this period. For example, during the month of August 1948, as four Razon drops per week were contributing to improved tactics, training, and results, a single Tarzon was expended to determine the effect of applying maximum up control using a recently modified tail assembly.[39] By mid-1949, Razon had been upgraded with "the newest modification of radio control equipment" and underwent extensive testing under a variety of conditions, including night flights. During this same period, Far East Air Force sent two airmen from Japan to Eglin for "training in the tactical application of VB-type bombs," where they participated in a variety of missions and dropped sixteen Razons before returning to their unit. Meanwhile, Tarzon testing under cold weather conditions produced results that "were at best only fair, due to flare failure."[40]

Notwithstanding the steady introduction of new technology throughout the late 1940s, the early fighting in Korea closely resembled that of World War II—familiar faces and weapons engaged in a familiar war-winning strategy. However, the exploitation of existing jet fighter technology, which rapidly translated into American air superiority, created a combat environment conducive to the introduction of precision bombardment at a time when the ground situation desperately called for it. The radio controlled vertical bombs just described were not the only postwar attempts at precision. In fact, in 1949 the 1st Experimental Guided Missiles Group took on seven additional test projects, including the VB-6 Felix, a heat-seeking bomb designed to steer itself toward the target producing the highest temperature emanation within the twenty degree scope of its forward sensor. Envisioned as a decisive tactical weapon, initial Felix tests were disappointing. And, although the decision to return the bomb to the research and development phase was

[39]Air Proving Ground, "History of 1st Experimental Guided Missiles Group," Appendix 7.
[40]Ibid., 10-11.

based primarily on the insufficient reaction speed of its control surfaces, the final test report also noted "lack of a suitable target during this time would also negate any efforts to test it, even if a theoretically workable model was available."[41] Thus, as America went back to war in 1950, its best prospects for precision guidance bore a remarkable resemblance to the radio-controlled weapons used during World War II.

Once war broke out, it did not take long for bombing accuracy to surface as a deficient capability. Specifically in the realm of strategic bombardment, despite the use of sophisticated, computer-assisted bombing systems such as the Air Force's K-series, CEPs remained in the 500-foot range—far from optimal given North Korea's rugged terrain and segregated targets.[42] Not surprisingly, as the only guided missile in quantity production prior to 1950, Razon emerged early in the conflict as a promising alternative to gravity bombs. In fact, as previously noted, preparations for the implementation of Razon by Far East Air Force bomber crews anticipated the Korean conflict. As early as 1949, the Air Proving Ground had trained three officers and six enlisted men of the 19th Bombardment Group for Razon work and in early 1950 began delivering specially equipped aircraft and a supply of Razon tail assemblies to this same group, which was based on the Japanese island of Okinawa.[43] Clearly, the intent was to establish a training cadre that would instruct additional aircrews of this group to use Razon. However,

---

[41]Ibid., 13.

[42]Research and Development Board, "Presentation of Strategic Bombing Systems," 15 May 1951, NARA II, College Park, Md., Record Group 330, Box 423, 2-5; among the deficiencies cited, the Air Materiel Command presenter noted that with 375 vacuum tubes, the K-series had apparently stepped over the tube utilization threshold to a position causing real equipment unreliability. Bombing accuracy limitations were also attributed to "an overwhelming desire to obtain immediate utilization of the very latest in ideas and inventions," resulting in engineering deficiencies or "bugs."

[43]Air Proving Ground Command, "Interim Report on Air Proving Ground and Other Experimental Activities in Support of Korean Operations," 5 September 1951, AFHRA, Maxwell AFB, Ala., file number K240.04B, 14.

shortly after the outbreak of war in Korea, it became apparent that neither the personnel nor the equipment had been utilized, and Far East Air Forces headquarters turned to the Air Proving Ground for additional assistance.

Because of the resulting delay in assembling the necessary equipment and personnel, the 19th Bombardment Group did not fly its first Razon combat mission over Korea until August 23, 1950. Even then, the first several missions produced unsatisfactory results because of frequent bomb malfunctions, some caused by damage from the bombs' long storage and poor packaging, and some by the relative inexperience of the group's operators and maintainers. Moreover, even though missile reliability quickly rose to ninety-six percent, from the outset Razon remained far more accurate in azimuth than in range, making it a weapon best suited for use against long, narrow targets. In fact, like its Azon predecessor, Razon was used almost exclusively against bridges in Korea, with defensible results—during the last four months of 1950, fifteen Korean bridges were destroyed using Razon missiles. However, to put these results in perspective, a total of 489 Razons were dropped during this period, of which 331 were controllable.[44] Clearly Razon was far from attaining the long-sought single-bomb destruction capability; nevertheless, it had its supporters. The low percentage of targets destroyed was partially attributable to the fact that limited equipment and crews forced training to be combined with combat missions. As an example, one bombardier destroyed two bridges with his first two bombs, but was then instructed to drop the remaining six for practice.[45] In fact, in every case where a bridge was destroyed by Razon, additional bombs were dropped on

[44]Headquarters 19th Bombardment Group, Special Projects Section, "Combat Employment of Tarzon and Razon Guided Missiles—Final Activity Report," 31 August 1951, AFHRA, Maxwell AFB, Ala., file number K240.01 vol. 3, 6.

[45]Ibid., 7.

the same target for practice. And, although clearly not unbiased, the on-site Razon project officer estimated that "any bridge can be successfully severed or destroyed with a maximum of four Razon missiles."[46]

Despite the project officer's enthusiastic endorsement of Razon, including a claim that "all aircrews expressed a preference for this type of bombardment over conventional methods," and the existence of mitigating circumstances that clearly suggested potential beyond the paltry number of bridges destroyed, it is clear that within the 19th Bomb Group there was considerable resistance to its continued use. For example, the group operations section resented having to plan missions for one or two aircraft in addition to the planning necessary for conventional missions, and there was discontent among the flying squadrons over the use of their aircrews and maintenance personnel for this special project. In fact, the additional workload created by such missions was not insignificant, since each required virtually all group sections to agree upon the allocation of limited aircraft, aircrews, armament crews, loading equipment, and transportation. Just to schedule an aircraft for a guided-missile mission required twelve separate telephone calls to various sections. A typical criticism from within the group's flying squadrons was that there were too many limitations to Razon's use, and such an experimental project did not belong in combat at the expense of aircrews and aircraft.[47] So, while there were those who firmly believed there was no better weapon in the Korean War for the strategic bombing mission, and despite generally favorable test reports, evidence suggests that a

[46]Ibid., 4.
[47]Ibid., 7, 10.

less-than-favorable private report went forward to Air Force headquarters, likely influencing the early suspension and eventual termination of the project.[48]

Indeed, on December 10, 1950, Razon bombing in Korea was temporarily suspended. However, the proximate cause of this halt was not the operational dissatisfaction just mentioned, but rather the arrival and substitution of the Tarzon missile, which promised to be more destructive and, it was hoped, more reliable than its predecessor. Once again handled exclusively by the 19th Bomb Group, three B-29 aircraft were modified to carry, launch, and guide the new missiles, and the first Tarzon was dropped in Korea on December 14, 1950. Over the course of the next four months, a total of thirty Tarzon missions were flown, once again with promising results. In a special presentation to the Guided Missile Committee of the Research and Development Board in March 1951, an Air Force representative noted how encouraging it was "that we do get some of the missiles out of the R&D after a certain length of time," and went on to describe Tarzon's performance in Korea in highly laudatory terms.[49] In addition to destroying numerous bridges, often knocking out two or three spans with its single mammoth explosion, Tarzon had scored a direct hit on a hydroelectric installation, challenging the conventional wisdom that guided weapons were suitable only for long, narrow targets. Citing the fact that five of the six most recent drops had destroyed or severely damaged their targets, this presenter happily concluded:

> It can be stated with assurance that free-falling guided bombs are practical and are proving to be an effective weapon, particularly a weapon of opportunity. Everyone overseas, from the using agency, the 19th Bomb Group, up through the Far East Air Forces, are enthusiastic about the Tarzon bomb and

[48]Air Proving Ground, "Experimental Activities in Support of Korean Operations," 16.
[49]R&D Board, "Presentation of Air Force Tarzon Project," 1.

its capabilities. By further development of free-falling guided bombs and adequate training of crews, I think we will realize an even greater tactical use for this weapon.[50]

Ironically, this glowing presentation was made in Washington D.C. on the very day of the ill-fated three-ship Tarzon attack against Sinuiju. Originally envisioned as a versatile weapon capable of accurately destroying strategic and tactical targets on land and sea, with the outbreak of the Korean War the Air Force optimistically negotiated the production of 1,000 Tarzons in addition to the Far East Air Force requirement.[51] That the project was entirely scrapped after expending only thirty bombs in Korea can be explained almost entirely by two factors—one obvious and one subtle. Tarzon's demise can be traced most directly to a critical design flaw that first surfaced during the Sinuiju mission of March 29, 1951. Although the cause of the third aircraft's crash was not immediately known, the absence of enemy opposition in the vicinity of the ditching site pointed to an ordnance mishap, and the loss of the group commander only served to intensify the scrutiny given subsequent Tarzon missions. Early suspicions that the bomb may have inadvertently detonated when it was jettisoned, or salvoed, in preparation for ditching, were all but confirmed three weeks later when mechanical difficulties forced the thirtieth Tarzon sortie to salvo its missile at sea. Even though the bomb was released "safe," it detonated one and one-half seconds after entering the water.[52]

This startling revelation triggered an immediate investigation that proved irrecoverable for the Tarzon project. In a priority message dated April 28, Far East Air Forces confessed that it "appears that missile cannot be salvoed safe from stand point of

---

[50]Ibid., 4-5.
[51]Air Proving Ground, "Operational Suitability Test of the Tarzon," 2, 87.
[52]HQ 19th Bomb Group, "Combat Employment of Tarzon and Razon," 6.

crew safety below 5,000 feet altitude."[53] To classify this as an undesirable feature in a weapon system would be the height of understatement. Accordingly, Far East Air Force announced that "no further Tarzon missions will be scheduled until further investigation is made to determine means of safe salvoing of missile."[54] Air Materiel Command very quickly isolated the fault to a problem with the arming wire. As a safeguard, when the missile was normally released, an arming wire would withdraw from the striker, allowing it to pierce a detonator on impact. When salvoed, with the "arm-safe" switch in the "safe" position, this arming wire dropped with the bomb, remaining in the striker. In a May 15 report to Air Force Headquarters, the Air Materiel Command concluded that Tarzon's hazardous salvo characteristics resulted from the breakup of the bomb tail at impact, which caused the inadvertent extraction of the arming wire. As a result, any further jarring motion could, and apparently did, "release the striker, detonating the 'safe' bomb."[55] And, although the Picattiny Arsenal in New Jersey very quickly developed a modification to remedy the problem, replacing the problematic arming wire with a threaded safety pin, no further Tarzon missions were ever flown in Korea.

Air Materiel Command's interim fix to the Tarzon salvo hazard was projected for delivery to the 19th Bombardment Group by June 1, 1951. The fact that bombing never resumed is a clear indication that, in fact, operational units in Korea did not want this weapon. Obviously, the salvo problem contributed to Tarzon's termination, and blowing up the group commander certainly did not endear this weapon to anyone. However, as with Razon, there were early misgivings by the using organizations in Korea. Such

[53]Air Proving Ground, "Interim Report on Experimental Activities," Appendix 9.
[54]Ibid.
[55]Ibid., Appendix 19.

dissatisfaction is understandable given Tarzon's poor overall track record. For example, of the twenty-eight bombs dropped in combat, five fell completely unstable, sixteen were not controllable, thirteen suffered from flare failures, and only six actually destroyed their intended targets.[56] And, while reliability rates were clearly on the rise by March 1951, Tarzon continued to have limitations that made it undesirable from an aircrew perspective. The controlling requirement, weather, restricted Tarzon's use to days and locations with clear visibility, and ensured that all missions were flown under conditions most favorable to fighter attack. Moreover, the optimal dropping altitude of 17,000 to 20,000 feet meant that enemy flak not only presented a real danger to bombers, but frequently obscured the receding flare. The requirement to maintain a straight and level course from bomb release until impact further increased aircraft vulnerability.[57] When Tarzon's inevitable low sortie rate and additional workload were factored in, it became apparent that this was not the ultimate weapon its developers had envisioned. Thus, even before the salvo safety could be perfected, discontinuance of the Tarzon-Razon Program was requested by Far East Air Forces, and granted by Air Force Headquarters.[58]

In the case of Razon-Tarzon, clearly a technology had been supplied for which there was little or no demand. In an attempt to resuscitate the project in May 1952, Air Proving Ground began investigating a new potential use for guided munitions. Virtually all previous uses of guided vertical bombs had been for strategic bombardment. Far East Air Force's lack of interest in Tarzon in 1951 reflected the fact that few suitable (i.e. daylight, strategic) targets remained in Korea. However, in the spring of 1952, realizing

[56]HQ 19th Bomb Group, "Combat Employment of Tarzon and Razon," 6.
[57]Air Proving Ground, "Operational Suitability Test of the Tarzon," 8.
[58]HQ 19th Bomb Group, "Combat Employment of Tarzon and Razon," 1.

there were several dozen Razon bombs stockpiled at Eglin AFB, and many thousands in Air Force stock, some enterprising project officer proposed "that the vertical bomb may prove to be the accurate weapon so badly needed by Tactical Air Command for its night attack."[59] During the latter part of 1952, extensive tests were conducted at Eglin AFB using B-26 light bombers and M-24 parachute flares for target illumination. In its February 1953 final report, however, Air Proving Ground concluded that "the increased accuracy of the Razon bomb over conventional bombs, using synchronous bombing, is insufficient to justify its use against tactical targets."[60] At about this same time, with the tacit approval of newly-inaugurated President Eisenhower, aerial operations in Korea were finally detached from the surface strategy, leading to some of the most effective air raids of the war. The resulting air-pressure strategy, completely void of precision guided bombs, targeted North Korea's hydroelectric power complex and irrigation dams to successfully exploit air power as a political as well as military weapon.[61] So, while radio control was not a decisive factor in Korea, clearly air power played a significant role throughout the war.

America Learns to Stop Worrying and Love the Bomb

The often-heard reference to Korea as America's "forgotten war" is particularly applicable in terms of doctrinal lessons. In fact, the Korean War confirmed many of the lessons of the Second World War, and yet the period after the 1953 armistice reflected a flight within the Air Force from the doctrinal lessons of the war, in favor of preparations

[59]Air Proving Ground, "Operational Suitability Test of the Razon Bomb," 10.
[60]Ibid., 9.
[61]Futrell, *USAF in Korea*, 625-27.

for massive nuclear war with the Soviet Union.[62] Much has been written about the national security policy that emerged in the 1950s under the Eisenhower administration, with its underlying strategy of "massive retaliation" and reliance upon air power technology. However, while the post-1953 period certainly witnessed the great buildup of Strategic Air Command to meet the perceived Soviet threat, the underlying doctrine of deterrence obviously had roots extending back prior to the Korean conflict. In the immediate aftermath of World War II, Bernard Brodie, one of the founding fathers of nuclear-deterrence theory, asserted that "thus far the chief purpose of our military establishment has been to win wars. From now on its chief purpose must be to avert them. It can have almost no other useful purpose."[63] That American policymakers accepted Brodie's judgment is reflected in a security policy that, for more than a decade, hinged on the deterrence of war by the threat of nuclear weapons.

Even while fighting a conventional war in Korea, this policy was reflected in the strategic emphasis given to guided missiles. For example, on October 24, 1950, Secretary of Defense George C. Marshall established a separate Directorate of Guided Missiles within the Department of Defense to advise him on issues pertaining to the research, development, and production of this emergent class of weapons.[64] The following year, Air Force Chief of Staff General Hoyt Vandenberg tasked Theodore von Karman and the Scientific Advisory Board to perform a comprehensive study of all Air

---

[62]Murray, "Air Power Since World War II," 103.

[63]Bernard Brodie, ed., *The Absolute Weapon: Atomic Power and World Order* (New York: Harcourt, Brace and Company, 1946), 76.

[64]Defense Department Memorandum, "Establishment of the Director of Guided Missiles in the Office of the Secretary of Defense," 24 October 1950, NARA II, College Park, Md., Record Group 330, Box 463.

Force armament and ordnance.[65] Within two years, the Air Force had seven distinct guided missiles under development, not counting the Razon and Tarzon vertical bombs already discussed. A good indication of the emphasis being given these new weapons was the creation of a new office at the Pentagon, Assistant Deputy Chief of Staff for Guided Missile Operations, and the adoption of a nomenclature that essentially designated guided missiles as aircraft types.[66] One of the most revealing projects of this period was the Rascal air-launched guided missile, or B-63 pilotless parasite bomber, as it became known under the new naming scheme. In stark contrast to the Razon and Tarzon "guided missiles" already in operation, Rascal was designed to carry a 5,000-pound warhead approximately 100 miles, traveling twice the speed of sound at altitudes in excess of 30,000 feet. Launched from a B-36 or B-47 bomber, this weapon would fly to the vicinity of its target using an inertial guidance system, but once the terminal dive was initiated it would be electronically guided to impact by a controller aboard the carrier aircraft. Although the project proposal clearly stated that Rascal's prime warhead would be atomic, it allowed that "provisions for alternative warheads will be made."[67]

These events suggest that even while in the throes of the stalemated Korean conflict, some consideration was given to the tactical role guided missiles might play. In one 1953 study, the commandant of the Air War College argued that the employment of guided

---

[65]Air Force Department Memorandum, "Request for Study of Air Force Armament Activities," 8 May 1951, AFHRA, Maxwell AFB, Ala., File number K240.01, vol. 2.

[66]Air Force Department Memorandum, "Nomenclature for Guided Missiles," 21 December 1953, NARA II, College Park, Md., Record Group 341, Box 591; the decision to adopt nomenclature similar to that in use for aircraft served two purposes: (1) there was a tendency by the majority of the Air Force to regard these weapon systems as something strange and mysterious, and it was believed that by closer association with piloted aircraft this attitude could be eliminated, and (2) it was hoped that this association would prevent guided missiles from falling into the ordnance categories controlled by the Army.

[67]Air Force Department Memorandum, "Proposed Logistics Concept—B-63," 12 February 1953, NARA II, College Park, Md., Record Group 341, Box 591.

missiles in actual operations "is one of the most dynamic problems facing the military forces today," and, while he conceded that "it is unlikely that they will completely replace the manned aircraft," he firmly believed that "one day they will fundamentally change the whole war concept, tactically as well as strategically."[68] As further evidence of the conventional role envisioned for guided missiles, Air Force plans called for three Rascal squadrons to be activated in 1955 but stated a requirement for atomic warheads for only thirty-four percent of weapons. In fact, while Rascal was designed primarily for use in the strategic air offensive, airmen realized that, as target areas became more heavily defended, its "primary role might become one of a tactical nature."[69]

Following the cessation of hostilities in Korea, on July 27, 1953, such prognostications were largely abandoned, along with the more clear-cut doctrinal lessons of the war. One obvious reason for this turn away from tactical precision-guided weapons was their technological failure to achieve desired results. As one expert conceded late in the Korean conflict, "guided missiles, even in 3-5 years...still will be very complicated, partly vulnerable and not as accurate as they should be."[70] However, the single greatest determinant of both doctrine and weapons technology during the 1950s was the Eisenhower administration's dramatically altered national security policy. Having promised during the campaign to end the war in Korea and significantly reduce the federal budget, Eisenhower abandoned the Truman administration's attempts to balance nuclear and conventional arms, focusing instead on foreign and defense policies

---

[68]Air War College, "Guided Missiles and Pilotless Aircraft in Theater Operations," May 1953, NARA II, College Park, Md., Record Group 341, Box 591, ii-iv.

[69]Ibid., 70.

[70]Walter R. Dornberger, "The Status of Guided Missiles Today," Lecture to Air War College, Maxwell AFB, Ala., 8 December 1952, NARA II, College Park, Md., Record Group 341, Box 591.

that would fully exploit nuclear weapons in order to reduce the defense budget, which accounted for seventy percent of federal spending in 1953. Eisenhower's "New Look" was essentially a national security policy based on the belief that placing greater reliance on nuclear arms would offset the risk of reducing American conventional combat power. Secretary of State John Foster Dulles's call for "massive retaliation" in response to Soviet aggression was, in fact, nothing more than a logical extension of National Security Council pronouncement NSC 162/2, which articulated this new security policy stating: "In the event of hostilities, the United States will consider nuclear weapons to be as available for use as other munitions."[71]

In order to make such a policy viable, the U.S. military clearly could not rely upon its existing inventory. For the first time, Americans abandoned their postwar pattern of disarmament, and defense spending by 1959 remained virtually unchanged from Korean War levels.[72] Not surprisingly, much of this spending targeted innovative technologies deemed critical to Eisenhower's nuclear-centric strategy. Technological improvements very quickly made nuclear weapons much smaller and much more powerful, leading to the introduction of tactical nuclear weapons. By mid-1953, for example, the Army had developed a 280-millimeter artillery piece capable of hurling a nuclear round some seventeen miles. Two years later, the Air Force fielded the Boeing all-jet B-52 intercontinental bomber, which could deliver four small but powerful nuclear bombs in the megaton range.[73] However, with further reduction in the size of nuclear weapons, the

---

[71]Cited in Robert A. Doughty and Ira D. Gruber, *Warfare in the Western World* (Lexington, Mass.: D.C. Heath and Company, 1996), 852.

[72]Actual figures are $44 billion for military spending in 1953, and $44.6 billion in 1959, according to Morris, *America's Armed Forces*, 311; however, the 1959 figure represents only 48 percent of total budget.

[73]Doughty & Gruber, *Warfare in the Western World*, 854-855.

missile soon began to challenge the manned bomber as the optimal means of delivery, resulting in Intercontinental Ballistic Missile development by the mid-1950s and deployment of the first Atlas missiles in 1959.[74] Of course, parallel Soviet advances, vividly demonstrated by the launch of Sputnik in October 1957, reduced America's strategic advantage, making nuclear deterrence of limited aggression much less credible. Nevertheless, criticism of the practical limits to deterrence, even by such influential leaders as the Army's Matthew Ridgway and Maxwell Taylor, had little impact. Significantly, by the time Eisenhower left office, the Army, Navy, and Air Force each possessed their own nuclear missile force, while precious little conventional air power existed in any branch of the military.

National security policy, a concept already alluded to, forms a key component of this work because of its historical and military significance. Defined in its broadest sense, national security policy is the course of action adopted by the United States government in pursuit of national security objectives. While the primary national security objective in the past has been the preservation of the United States as a free nation with its fundamental institutions and values intact, in recent years two additional core objectives—the bolstering of America's economic security and the promotion of human rights abroad—have been officially acknowledged.[75] Formulated by the National Security Council, the basic national security policy of the Eisenhower administration pursued very similar objectives using a combination of military, political, and economic

[74]For the most authoritative account of the technological development of missile guidance, see Donald MacKenzie, *Inventing Accuracy: A Historical Sociology of Nuclear Missile Guidance* (Cambridge, Mass.: The MIT Press, 1990).

[75]U.S. President, *A National Security Strategy for a New Century* (Washington, D.C.: The White House, 1999), iii.

instruments of national power. However, in keeping with the secrecy that had long shrouded nuclear weapons, the exact policy for their implementation, formally laid down in 1959 as NSC 5906/1, was a top secret document. In fact, when consideration was given to the preparation of an unclassified version, the Joint Chiefs of Staff concluded that "the publication of any document based on Basic National Security Policy and intended for public consumption is not in the National interest and should be opposed."[76] Yet, the military arsenal of the late 1950s, briefly outlined above, clearly reflected that "the central aim of the U.S. policy must be to deter the Communists from use of their military power, remaining prepared to fight general war should one be forced upon the United States," and revealed in all but word that "it is the policy of the United States to place main, but not sole, reliance on nuclear weapons."[77]

One explanation for the dearth of innovation in precision guidance technology in the two decades following World War II is clearly that atomic weapons increased the firepower of individual bombs by several orders of magnitude, negating the demand for improved bombing accuracy. The resulting national security policy of the Cold War rested upon radical new technologies, to be sure, and unprecedented resources were devoted to their coordinated development. For example, the Department of Defense Reorganization Act of 1958 consolidated and focused the considerable research and engineering activities of the various military services under the unitary authority of the Secretary of Defense, and established the Advanced Research Projects Agency as an

[76]Defense Department Memorandum, "Report by the Joint Strategic Survey Council," 24 September 1959, NARA II, College Park, Md., Record Group 218, Box 11, 3.

[77]National Security Council, "Basic National Security Policy—Policy Paper NSC 5906/1," 5 August 1959, NARA II, College Park, Md., Record Group 273, Box 50, 6; ironically, this last phrase was expunged from the National Archives copy of NSC 5906/1 with a black marker prior to photocopying—fortunately, the Joint Chiefs of Staff received a courtesy copy of the paragraph in question, and the original verbiage is preserved in a 15 July 1959 memorandum, Record Group 218, Box 11.

important additional research and development agency within the Defense Department.[78] Such emphasis produced unprecedented air power technologies, theoretically capable of not only deterring war, but, in the event of general war with the Sino-Soviet Bloc, of allowing the United States "to prevail and survive as a nation capable of controlling its own destiny."[79] However, the resulting neglect of conventional battlefield capabilities, and particularly accurate tactical bombing, eventually left American policymakers with few real military options, and left America ill-prepared to fight another limited war. Thus, emphasis on strategic weapons during the 1950s left tactical guided weapons in an arrested state, virtually unchanged from their early use in Korea at the beginning of the decade. And, just as radio control had proven woefully inadequate in two previous wars, unresolved technological bottlenecks dictated that Tarzon would not be "Lord of the Jungle" in Vietnam.

[78]Defense Department Memorandum, "Review of Defense Science Board Limited War Report," 31 December 1958, and Defense Department Directive, "Department of Defense Advanced Research Projects Agency," 30 December 1959, NARA II, College Park, Md., Record Group 218, Boxes 12 and 77.

[79]National Security Council, "U.S. Policy in the Event of War—Policy Paper NSC 5904," 19 February 1959, NARA II, College Park, Md., Record Group 273, Box 50, 1.

4. – Making Pinpoint Accuracy a Reality

In March 1965, President Lyndon Johnson shifted to a policy of overt war against North Vietnam, initiating the Rolling Thunder bombing campaign. This operation, designed to interdict insurgents and supplies infiltrating South Vietnam and convince North Vietnam to cease its activities there, resulted in 350,000 combat sorties flown over the next three and a half years. Not entirely unrelated, but in clear contradistinction to Rolling Thunder, was a little-known "covert operation" that took place the following year, halfway around the world. Once again interested in increased bombing accuracy, in May 1966 the Air Force initiated flight-testing of a promising Texas Instruments laser guided bomb design at Eglin AFB, Florida. Although still in prototype form, the first half-dozen drops against white plywood panels were so encouraging that Air Force test managers decided to demonstrate tactical utility by targeting an obsolescent Army two-and-a-half ton truck—an unprecedented challenge given its small size and weathered, non-reflective surfaces. To make matters worse, Texas Instruments engineers suspected that the laser designator—not of their company's design—produced side lobes that, in some cases, illuminated the thick underbrush between the lasing tower and the target, misdirecting bombs to the foreground. So, while engineers at the plant in Dallas worked furiously to filter out such spurious signals electronically, adding gain control circuitry to track and guide on the strongest signal, their coworkers in Florida devised a clever "workaround" of their own to dramatically increase the likelihood of a successful test. Around ten o'clock on the night of November 18, this intrepid band of civilians stole out to the range for a covert pre-attack on the "deuce-and-a-half" truck. Having previously provisioned themselves at a local hardware store, they worked until morning with axes,

shovels, and a lawnmower to clear the target foreground for about 500 feet, and then expended two entire cases of green and black spray paint on the vehicle itself. Not surprisingly, the 750-pound bomb dropped hours later scored a direct hit on the truck.[1]

Weapons Innovation Approaching Vietnam

By the mid-1960s, technological advances had, in fact, made precision bombing a reality beyond the wildest dreams of earlier generations. However, significant changes to national security policy and air power doctrine prefigured, and were essential to, this technical achievement. The previous chapter clearly demonstrated that, during the 1950s, national security policy drove military doctrine and, consequently, weapons development in a specific direction. This fact was perhaps best illustrated by the Navy, which dramatically altered its doctrine of sea control once the U.S. adopted a cold war policy of deterrence. By 1954, the Navy had commissioned the world's first nuclear submarine, USS *Nautilus*, and its carriers all bore nuclear weapons and nuclear-capable aircraft—by 1960, the first Polaris submarine had launched a ballistic missile while submerged.[2] Air Force doctrine and technology were similarly slaved to the paradigm of general war with the Soviet Union after 1953, in blatant disregard for the tactical lessons of Korea. The result, by the early 1960s, was an inventory of fighter aircraft optimized for nuclear combat and a generation of fighter pilots unprepared for the conventional fight.

In less than a decade, the fighter command that had played a preeminent role in Korea was essentially transformed into a miniature bomber command, with aircraft

[1]Weldon Word, interview by author, 19 March 2001, Tyler, Tex., tape recording, Personal Files of author; in defense of his surreptitious actions, Word legitimately noted that the purpose of the test was to evaluate the guidance capability, not the laser.

[2]Robert A. Doughty and Ira D. Gruber, *Warfare in the Western World* (Lexington, Mass.: D.C. Heath and Company, 1996), 855.

designed specifically for high-speed, low-level delivery of small nuclear weapons. While these aircraft might have been physically capable of dropping conventional ordnance, training priorities saw to it that pilots were not. As one 1961 training manual for F-100 pilots plainly stated, "nuclear training will in every instance take precedence over non-nuclear familiarization and qualification."[3] Although the emphasis of this study will remain on bombing accuracy, the remarkable effect of doctrine on weapons technology during this period was illustrated even more poignantly by those air defense fighters designed for the air-to-air role. Optimized to climb quickly to altitude, frontline fighters such as the F-101 possessed almost no capability to maneuver once an enemy was engaged—a capability considered superfluous since ostensibly fighters under radar control could simply fire nuclear missiles at incoming bombers. In fact, top military leaders were so confident that missile technology had rendered the dogfight obsolete, that the newest fighter, the F-4 Phantom, was configured without guns. As Secretary of Defense Robert McNamara smugly observed at the outbreak of Vietnam, "in the contest of modern aerial warfare, the idea of a fighter being equipped with a gun is as archaic as warfare with bow and arrow."[4] Although such technological choices may seem ludicrous in retrospect, in 1960 Air Force doctrine and armament were essentially congruent.

A shift in national security policy in the early 1960s, however, led to dramatic changes in both doctrine and weapons technology, resulting in renewed efforts to

---

[3]Cited in Williamson Murray, "Air Power Since World War II: Consistent with Doctrine?," in *The Future of Air Power in the Aftermath of the Gulf War*, eds. Richard H. Shultz Jr. and Robert L. Pfaltzgraff Jr. (Maxwell AFB, Ala.: Air University Press, 1992), 104; the quintessential example of this transformation from fighter to bomber force was the Republic F-105 Thunderchief, with its low-maneuverability wings and internal bomb bay.

[4]Cited in I.B. Holley, Jr., "Technology and Doctrine," in *Technology and the Air Force: A Retrospective Assessment*, eds. Jacob Neufeld, George M. Watson Jr., and David Chenoweth (Washington, D.C.: Air Force History and Museums Program, 1997), 101.

increase the accuracy of aerial bombardment through precision guidance. During his 1960 presidential campaign, John F. Kennedy pledged to reverse Eisenhower's Massive Retaliation strategy in favor of "Flexible Response." Immediately following his inauguration, Kennedy announced that it would be the policy of the United States to answer "an attack on any part of the free world with any kind of weapons, conventional or nuclear," with a "suitable, selective, swift, and effective" response.[5] In order to create the flexibility required by such a policy, the Kennedy administration pursued a variety of options, many of them nuclear. For example, newly confirmed Defense Secretary McNamara pushed for greater flexibility in America's potential responses to failed deterrence by targeting the enemy's military forces and holding a large strategic nuclear force in reserve. Of course, such a counterforce strategy proved expensive, since it required that America's nuclear forces be both better protected and more accurate than predecessors. Despite the costs, McNamara pursued the nuclear dimension of Flexible Response by accelerating the acquisition of second-generation missiles, notably Minuteman, while further developing and enlarging the Polaris missile submarine fleet and the B-52 strategic bomber force.[6]

However, Flexible Response also required a dramatic increase in the number and variety of conventional forces, eventually leading all branches of the U.S. military to refocus on conventional warfare. The argument that "the Air Force was ready once again to spend money on improving its aim" once the 1950s doctrine of Massive Retaliation gave way to the 1960s principle of Flexible Response may be an oversimplification of the relationship between policy and weapons technology, for it clearly neglects the Vietnam

[5]Doughty and Gruber, *Warfare in the Western World*, 861.
[6]Ibid., 862.

War as a concurrent, causal factor.[7] In fact, the sources and determinants of military technological innovation are extremely complex. The development of air power technology during the Cold War makes it quite clear that national security policy certainly played a major contributing role. However, it should be equally clear from the previous two chapters that at least three additional components have necessarily influenced such innovation: military doctrine to translate policy into specific weapon systems, technological antecedents upon which to build, and warfare itself, which frequently provides the urgency, requirements, and resources for novelty. Indeed, these four elements contributed immensely to the creation of the precision guidance technology that finally made effective pinpoint bombing a reality. Having already examined the contributing role of policy and doctrine in some detail, attention will now shift to the function played by available technology and wartime demand.

Enabling Technological Antecedents

Historian George Basalla's conceptualization of the evolution of technology provides valuable insight into the sources and determinants of this, and other, invention. From the preceding chapters, it should be clear that technological creativity is always based upon antecedent technology. In fact, for Basalla it is an article of faith that "any new thing that appears in the made world is based on some object already in existence."[8] An interesting counterexample, which supports this basic rule, is the inventive genius of Leonardo da Vinci, which often did not build upon existing technology, and consequently often failed to progress from drawing board to working prototype. The fact that

[7]Shelby G. Spires, "Guiding Light," *Air and Space*, April/May 1999, 71; synopsis of argument advanced by David R. Mets.

[8]George Basalla, *The Evolution of Technology* (Cambridge: Cambridge University Press, 1988), 45.

concerted efforts to create the technologies of precision bombing failed during the period from the 1920s to the 1950s, but succeeded in the 1960s, begs the question of which new technologies evolved into maturity between Korea and Vietnam. In fact, this decade was a wellspring of technological creativity, leading inevitably to an excess of novelty. With literally thousands of potential avenues to follow, Basalla's model holds that economic, military, social, and cultural factors will select which technological novelty is pursued.[9] Two critical technologies, the laser and the semiconductor integrated circuit, emerged concurrently in the late 1950s and were quickly selected and pursued for their tremendous military potential. Within a few short years, these became the enabling antecedent technologies upon which precision guidance was built.

The word laser is an acronym for *l*ight *a*mplification by *s*timulated *e*mission of *r*adiation, an apt description of the function it performs. In 1960, Theodore H. Maiman produced the first operational laser using a ruby rod oscillator. However, attributing this "invention" to one specific person is problematic, since a vast amount of research and development both preceded and followed this event. As early as 1952, scientific research by J. Weber and others had demonstrated that microwave amplification by stimulated emission of radiation, or maser, operation was theoretically possibility. By 1955, Caltech physicist Charles Hard Townes had created such a device—three years later he predicted that maser principles could be extended to the light spectrum to produce a coherent and monochromatic laser beam. Even though Maiman proved him right two years later, within another two years numerous teams of researchers advanced the state of the art considerably by producing lasers employing continuous-wave helium-neon gas, trivalent

[9]Ibid., 135.

uranium in calcium fluoride and other solid-state materials, and, most promising of all in 1963, the neodymium-doped glass rod.[10] This does not imply that individuals have been irrelevant to technological innovation, for inventive genius certainly played an important role in the development of precision guidance. However, technologies of the twentieth century have become so complex that sequences of breakthroughs are frequently implicit in a given "invention." Such was certainly the case with the first laser-guided bomb.

The very notion of developing a tactical laser weapon system was first seriously contemplated by scientists at Army Missile Command's Advanced Systems Laboratory at Redstone Arsenal, Alabama, in the early 1960s. At that time, lasers were deemed to have two potential military uses, the most promising of which was a brute force application "as a kill mechanism of the death-ray type."[11] However, even at this early stage, lasers were foreseen as a means of finessing other weapons onto the target. Among the optimistic premises of a 1963 Redstone report was a statement that:

> Because intensities about one million times that of the sun are attainable from a laser with only a moderate input requirement, a military interest was developed, first as a type of kill mechanism and second as a method of guidance and control. Although the whole state-of-the-art is very young, available results show great promise in these two areas.[12]

Not surprisingly, the bulk of this sixty-page report then focused on the complex issues associated with the development of a laser kill weapon.

Although envisioned as a weapon capable of incapacitating vehicles by targeting such vulnerable areas as tires, fuel tanks, track runners, antennas, ammunition magazines, periscopes, and electronic components, in reality it was understood that the most

---

[10]U.S. Army Missile Command, "A Study of the Application of Laser Techniques to Weapon Systems," 19 February 1963, DTIC AD Number 526536, 2.

[11]Ibid., 42.

[12]Ibid., 6.

vulnerable target would be enemy personnel. Realizing that partial immobilization is actually more effective than total destruction, since wounded personnel require care, the report sanguinely advocated the use of such a weapon to inflict non-lethal "kills" by targeting the skin, brain, legs, eyes, and other vulnerable areas. As justification, it was noted that stunning, loss of motor control, inability to reason properly for a short period of time, and even "the ignition of the enemy's uniforms would become enough diversion to consider the personnel involved as 'killed.'"[13] That such a futuristic, horrific weapon was never fielded likely had less to do with societal mores than with its sheer physical immensity. Although a ruby laser weapon in the fifty-yard range might weigh less than ten pounds, its mass was an insignificant fraction of power supply parameters. Initial plans called for the weight of a handcarried laser weapon to be distributed among three men, while a 500-yard laser weapon would require its own dedicated vehicle.[14]

Ironically, it was the laser's secondary function of guidance and control that was most quickly harnessed for military application. Initial investigation uncovered vast potential in this realm, including such possibilities as "beam riding" and "command guidance" using modulated laser light. However, by 1963 it was concluded that "semiactive guidance seems to be the most attractive method of guidance at the present time," and the Army began to explore its potential as an antitank missile system.[15] If concept definition constitutes invention, then laser guided munitions were invented at Redstone Arsenal at this time. According to the Army concept, semiactive homing called for a laser to illuminate the target, while "an optical receiver located in a missile would

[13]Ibid., 7.
[14]Ibid., 22, 25-26.
[15]Ibid., 38, 40.

track the reflected optical signal and provide terminal guidance to missile impact."[16] Of course, this was all still highly theoretical. It was one thing for civilian scientists at Redstone to glibly speculate that the development of a compatible transmitter, receiver, and tracker necessary for semiactive guidance "seems to be feasible in the near future."[17] It was quite another to sell such pie-in-the-sky technology to the muddy-boot generals at nearby Fort Rucker so that budget money would be allocated for further weapons development. Encouraging preliminary work by Westinghouse, using a neodymium-doped rod laser, clearly defined the numerous unsolved problems of semiactive guidance, but indicated every expectation of solving them. However, with serious operational issues, such as weather limitations and the absence of adequate receivers, the antitank project faced stiff opposition, and made little headway beyond modest laser refinement.

On July 24, 1958, just as Townes was conceptualizing the first laser, Jack St. Clair Kilby, an engineer at the Texas Instruments semiconductor lab in Dallas, penned a radical idea in his lab notebook: "the following circuit elements could be made on a single slice: resistors, capacitor, distributed capacitor, transistor."[18] By September 12, he had actually constructed a simple circuit on a single chip of silicon, creating the first integrated circuit. Of course, Kilby was not the only engineer working on "the interconnections problem" that year. Commonly referred to as the co-inventor of the integrated circuit chip, Intel co-founder Robert Noyce arrived at a very similar solution just months after Kilby, using an approach that turned out to be easier to manufacture.[19] However, thanks to the "Kilby

---

[16]Ibid., 40.

[17]Ibid.

[18]T.R. Reid, "Thank You Mr. Chips," *Washington Post Magazine*, 10 December 2000, 34.

[19]Ibid., 35; had he not died in 1990, Noyce likely would have shared the 2000 Nobel Prize in physics with Kilby.

patent," and a fortuitous decision by the Air Force to let Texas Instruments integrate its Minuteman missile circuits in order to lighten the payload, TI was able to lead the integrated circuit market in the 1960s just as it had led the introduction of silicon transistors. Commercial applications of this technology abound today, but military funding undoubtedly sped integrated circuit production to maturity, for the prospect of an entire circuit imprinted on a chip no larger than a ladybug, without wires, soldering, or bulky components, meant dramatically reduced weight and power requirements along with rugged reliability. Given the critical role of semiconductor integrated circuits as an enabling technology for precision guidance, it is perhaps not surprising that Texas Instruments played a pivotal role in the development of the first truly successful guided bombs. However, it will become apparent that the company's involvement was anything but a straightforward application of its semiconductor core competencies.

In fact, by 1964 Texas Instruments had developed a broad range of expertise, making it a natural repository for the various technologies upon which to build guided bombs. However, the progression from oil, to silicon, to precision guidance was hardly an obvious one, and it deserves at least some explanation. In the oil exploration business, Texas Instruments' parent company, Geophysical Service Incorporated, built much of its own equipment during the 1940s and 1950s, pioneering the improvements in signal processing, sensors, low-level signal amplification, data recording, compact packaging, and rugged electronics that eventually became TI's stock in trade.[20] Following the Second World War, TI luminaries Eric Jonsson and Pat Haggerty realized that tremendous opportunity existed outside of geophysical exploration but concluded that

[20]Steve Roemerman, "The History of Guided Missiles at Texas Instruments," *TI Technical Journal*, July-August 1995, 67.

their company could establish itself "on the leading edge of the electronics business only if we were a government contractor."[21] Early military production included radar systems and submarine detection gear, but by 1954 the company was seeking guided missile applications for the newly introduced silicon transistor. However, despite defense work throughout the late 1950s, providing components for such missile programs as Bomarc, Corvus, Falcon, Titan, Pershing, and Minuteman, Texas Instruments found itself perennially in the production role, often building to print, rather than the more lucrative role of developer that it coveted.

In the early 1960s, Texas Instruments parlayed its burgeoning radar and missile expertise into a profitable contract to build the Navy's new Shrike anti-radar missile. In standard Navy fashion, this air-launched weapon was designed primarily in-house, but competitive bids were accepted for various sections of the missile, and Texas Instruments eventually won the majority of Shrike guidance contracts. The Shrike program turned out to be a huge breakthrough. With $25 million in sales during its first five years, "it was big enough to be important to TI and small enough that larger companies, absorbed with huge projects of the nuclear arms race, did not have an overwhelming advantage."[22] In effect, Texas Instruments came of age as a defense contractor on Shrike. Producing a reliable product as "quasi-prime contractor" of a major system, while holding costs down, brought the company substantial credibility and a variety of new opportunities. The stage was now set for a remarkable cooperative venture, with engineers from this improbable electronics firm cast among the principals who would finally achieve the age-old objective of "pickle barrel" bombing accuracy.

---

[21]Ibid.
[22]Ibid., 69.

How Pinpoint Bombing Became a Reality

Today, the term precision guided munitions, or PGM, conjures up images of a vast array of high-tech, near-zero CEP weapons, utilizing a variety of guidance methods. Strictly speaking, the Paveway laser-guided bomb was not the first weapon to fit this general description, but its preeminence as the first to gain wide operational acceptance thereby ushering in the age of precision that will be the subject of subsequent chapters renders it deserving of special attention. No single individual can be credited with the invention of the laser guided bomb, yet it is impossible to imagine its development without the considerable contributions of several heroic figures representing three distinct organizations: Texas Instruments, the U.S. Air Force, and the Army's Redstone Arsenal.

As mentioned above, a laser-guided antitank weapon was first conceptualized at Army Missile Command before 1963. Not known for their imagination or vision in the pursuit of new technology, Army leaders found the concept futuristic and impractical, and they withheld funding for its development. What saved the project from a silent, premature death at that time was the vision and persistence of one Redstone scientist, David J. Salonimer.[23] Both because he lacked funding to develop receivers and other components, and because he correctly perceived it as the greatest limiting deficiency, or technological bottleneck, Salonimer spent several years working to perfect a reliable, man-portable laser. With his limited funding, certainly less than $1 million, Salonimer

[23]Word, 2001 Interview, 1; Salonimer's early contributions to semiactive laser guidance are amply documented in numerous technical reports (e.g. D.J. Salonimer, "Susceptibility of Laser Semi-Active Guidance to Countermeasures," Army Missile Command Report TR-64-5, 2 March 1964). The indictment of Army leadership is not the author's service bias showing through, but rather a frustration that Salonimer himself frequently shared with project engineers. Weldon Word recounted an oft-told claim that "if he went down to Ft. Rucker and told them he had just invented an antigravity machine, they would say 'well, why don't you come back next month and tell us what we can use it for.' They just didn't get it."

began doing some advanced work with the Martin Company in Orlando, Florida, and by late 1964 he had developed a very promising, lightweight laser.[24] However, in order to convince the Army of the value of such a weapon, he needed a demonstration vehicle to guide with his laser. Having crossed paths with Texas Instruments on several occasions, and being familiar with their guidance work on the Navy's Shrike missile program, Salonimer hatched a plan for a ground demonstration that would marry semiactive laser guidance with this radar-busting missile.

Although perhaps a seeming unlikely alliance on first appearance, Texas Instruments' involvement in such a venture was more than mere coincidence. By the early 1960s, the company was beginning to move into development work. In the defense sector, it had established an infrared technology and a radar business, but was trying to get development work on something that was round and long. In order to drum up business, TI engineering managers were literally sent out to rustle up projects in the missile arena. However, because government regulations mandated a lengthy formal approval cycle for any contract over $100,000, the ideal missile project was one in the $50-$80,000 range, with the potential to move from development into production. It was while trying to sell the Army on the idea of a ground-launched anti-radiation missile that Texas Instruments engineers first encountered Salonimer in Huntsville, Alabama. Although the Army declined to fund this TI initiative, Salonimer used his influence to get the company approximately $40,000 to fund a concept study to transform the Shrike anti-radar missile into a ground-launched, laser-guided weapon.[25]

---

[24]Word, 2001 Interview, 1.
[25]Spires, "Guiding Light," 66.

The project engineer for this venture, thirty-four year old Weldon Word, had recently transferred from a joint Navy-Texas Instruments antisubmarine sonar program in Rhode Island, during which his year-and-a-half of shipboard data collection off the continental shelf made him restless for something more stimulating. Although the laser-guided Shrike project began inauspiciously with a half-dozen team members and minimal funding, Word went on to gain recognition as the central figure in the creation of the laser guided bomb, and a key strategist in building the Texas Instruments missile business. Years later, Word and three of his initial team members received TI's coveted Haggerty Award in recognition of their accomplishments.[26] This earliest attempt at semiactive guidance must be described more as a building block than a breakthrough. Given its reputation as a semiconductor operation, Texas Instruments would seem a natural fit for the development of seeker technology and laser detectors. However, during the course of this project, the vast majority of resources were expended trying to convert the missile from an air-launched to a ground-launched configuration. Because Shrike had been designed for launch from an aircraft at high speed, one approach explored adding a booster and a twelve-foot launching rail. In fact, the project resulted in little more than paper studies and barely scratched the surface of the laser guidance piece of the puzzle.[27] This early project was nonetheless significant because it brought together key contributors from Redstone and Texas Instruments, but it left them with neither a functional technology nor an interested customer after the Army abandoned laser Shrike.

America's active engagement in limited war in Vietnam, beginning in early 1965, did much to change that. Of course, the concept of fighting a limited war predated

[26]Roemerman, "Guided Missiles at Texas Instruments," 73.
[27]Word, 2001 Interview, 2.

Vietnam. Under the nuclear umbrella of the Cold War, wars had to be fought very carefully, with the emphasis shifting away from mass destruction in favor of the precise, controlled infliction of damage. As a result, "limited-war theory" became much in vogue during the late 1950s and early 1960s, and profoundly influenced the Flexible Response policy of President Kennedy and the Johnson administration's strategy in Vietnam.[28] However, when America launched the massive Rolling Thunder air campaign in Vietnam in 1965, it quickly became obvious just how difficult and costly it would be to destroy limited military targets using the same old "dumb" bombs now delivered by supersonic aircraft designed with a nuclear mission in mind. Perhaps the most graphic example of the shortcomings of the existing technology was the effort to destroy the Thanh Hoa Bridge, a vital rail and highway artery spanning the Song Ma River, seventy miles south of Hanoi. The bridge was first attacked by seventy-nine F-105 fighter-bombers on April 3, 1965. Despite dropping 638 750-pound bombs, firing 300 rockets and missiles, and losing five aircraft in the process, the bridge, though hit several times, remained intact. In fact, seven years and 869 sorties later, traffic was still crossing Thanh Hoa unimpeded.[29]

Having previously examined the roles of national security policy, military doctrine, and technological antecedents in the creation of military technologies, it is apparent that a fourth enabler, the wartime exigencies of Vietnam, proved equally necessary to the "invention" of true precision guidance technology. Just as urgent requirements and increased available resources during World War II catalyzed the wartime development of

[28]Doughty and Gruber, *Warfare in the Western World*, 912-14.

[29]Headquarters, Pacific Air Forces, "Linebacker: Overview of the First 120 Days," 27 September 1973, AFHSO, Bolling AFB, D.C., file number CHECO-K717.0413-208, 24.

technological novelty ranging from amphibious landing craft to atomic weapons, these same factors played a noticeable role beginning early in the Vietnam conflict. By early 1965, the Air Force chief of air materiel acquisition had already established a special limited war office at Wright-Patterson AFB, Ohio, with an ancillary detachment at Eglin AFB, Florida, dedicated specifically to the acquisition of technology that promised immediate improvements to air combat in Vietnam. The first commander of this detachment, Colonel Joseph Davis Jr., played a critical role in the development of laser guided weapons, providing the vision within the Air Force that translated Vietnam combat requirements into specific funding and demand—vital components missing from the earlier Army program. Having flown F-84 fighter-bombers in the Korean War, where it was not uncommon to dispatch twelve or more aircraft against a single bridge or similar target, Davis knew all too well the challenges of dropping iron bombs accurately. Early reports coming out of Vietnam demonstrated that, if anything, the challenge had intensified, and, so, in 1965 he began searching for a technological solution to the age-old precision bombing problem—hardly a unique quest.

However, as Davis surveyed the field of available technology, one of the earliest demonstrations to catch his eye was the Martin laser designator developed earlier as part of the Army Missile Command project. As he observed this still-rudimentary device, with its ability to easily track a vehicle in motion at a range of 1,000 feet, Davis had an epiphany of sorts. Laser guidance, he realized, offered the promise not only of single-bomb target destruction, a tremendous savings in lives, aircraft, and dollars, but also the unprecedented prospect of hitting moving targets.[30] Promoted that same year to the

[30]Spires, "Guiding Light," 67.

position of vice commander of Eglin's Air Proving Ground Center, technically Davis's responsibility shifted from acquisition to weapons testing and evaluation. In actuality, over the next three years he used his influence and authority, as *de facto* base commander over Eglin's vast complex of test ranges and support facilities, to ensure that the Air Force acquired the precision technology he now firmly believed was possible.

Weldon Word and Joe Davis first met at Eglin in June of 1965—Word was still looking for missile work for Texas Instruments, while Davis, in his new position, was still pursuing the dream of precise bombardment. As Davis explained the bombing problem in Vietnam, he pulled some battle damage assessment photographs from his desk drawer, including one of the recently attacked Thanh Hoa Bridge. As Word recalled, "you could see pockmarks in the ground, and we counted over 800 pockmarks, and the bridge was still standing—and you didn't know how many pockmarks were in the river."[31] Davis proceeded to outline his vision for a weapon that could be dropped high enough to avoid deadly ground fire, yet accurately enough to preclude needless return trips to a target. In order to accomplish this, he envisioned a bombing profile that would start at an altitude of 18,000 feet, release weapons around 12,000 feet, and never take the delivery aircraft below 8,000 feet.[32] Given the average bombing accuracy of the day, which ranged from 100 to 1,000 feet depending on tactics, target, and weather, essentially Davis was asking for a guidance capability that would take a bomb dropped in a thousand-foot basket, and make it routinely hit within thirty feet of the desired target.

Based on their experience with the laser Shrike project, Word believed that his Texas Instruments team could arrive at a viable solution by mating Dave Salonimer's laser idea

[31]Word, 2001 Interview, 2.
[32]Ibid., 3.

to Joe Davis's bomb problem. However, with absolutely no expertise in bombs, TI engineers could offer few specifics without first holding preliminary talks with the staff experts at Eglin. After getting the brush-off by one unenthusiastic mid-level officer anxious to close shop for the day, a frustrated Word recommended to his superiors that TI opt out of the proposed project. When word of this reached Colonel Davis, he was infuriated. Determined to see the project through, despite the fact that he was no longer in the development business and had no money to fund such a program, Davis telephoned early the next Friday morning with a proposition. Word's team was basically told that if they could produce a proposal to build a dozen of something, within six months, for less than $100,000, and have it on Davis's desk by seven o'clock Monday morning, it was as good as funded. Hardly sleeping the entire weekend, Word and one electrical engineer put together an eighteen-page handwritten proposal with hand-drawn pencil sketches of a bomb with wings on the back and a seeker hard-mounted to one wing like a flashlight.[33] Within four hours of meeting their deadline, three civilian experts from Davis's headquarters had evaluated and typed up the proposal, and it was on a plane headed for Wright-Patterson AFB, Ohio.[34] With this original proposal, completely unfeasible in retrospect, the process of developing a laser-guided bomb was formally begun.

Changing the Paradigm

In his groundbreaking 1962 classic, *The Structure of Scientific Revolutions*, historian of science Thomas Kuhn proposed that paradigms, bodies of universally recognized achievements that for a time provide model problems and solutions to a community of

[33]Spires, "Guiding Light," 68.
[34]Word, 2001 Interview, 2.

practitioners, play a central role in research.[35] Although Kuhn developed this concept strictly to illuminate science, by his own admission his thesis is applicable to many other fields as well.[36] One of the most persuasive applications of Kuhn's model to a developing technology was Edward Constant's conclusion that turbojet engines emerged only when the existing paradigm of piston engine-propeller aircraft was fundamentally challenged, and changed. According to Constant, the turbojet revolution did not result from a failed or discredited technology—indeed the two decades following 1925 saw a tenfold increase in horsepower, from 350 to 3,500, and a doubling in speed to well over 400 mph.[37] However, abandoning the old paradigm revolutionized aircraft design by freeing engineers from the complex technologies that had encumbered later designs—the radial engine's intricate crankshaft being but one example—and allowing them to take full advantage of streamlining, transonic airflow properties, and other advances in aeronautics and metallurgy. Similarly, starting with their first handwritten proposal, the Texas Instruments solution transcended an established paradigm, resulting in revolutionary changes in the design of precision guided munitions.

Just as the piston engine evolved in spectacular fashion from one-cylinder workbench models to the Rolls-Royce Merlin, the previous two chapters clearly reveal a technological evolution in guided bombs, from the Kettering Bug to Tarzon and beyond. However, in the process of solving the various problems, or bottlenecks, associated with guidance, the community of practitioners involved almost invariable accepted, among

[35]Thomas S. Kuhn, *The Structure of Scientific Revolutions*, 1962, 2nd ed. (Chicago: University of Chicago Press, 1970), viii, 10.

[36]Ibid., 208.

[37]Edward W. Constant III, *The Origins of the Turbojet Revolution* (Baltimore: Johns Hopkins University Press, 1980), 6-11, 118.

other premises, the notion that any highly-accurate bomb would necessarily be gyroscopically stabilized in order to be dirigible, or steerable. This paradigm of gyros consistently led to unwieldy technology that got more complicated as it got more precise. Texas Instruments succeeded, where so many others had failed, in large measure because a variety of constraints, including time and money, forced them to change the existing paradigm. While not the only solution proposed at this time, the innovative weapon system subsequently designed by Texas Instruments was a radical departure from, and a vast improvement over all previous attempts at precision bombing. In order to better understand why the simplified TI design became the prototype for future generations of precision guided munitions, including many still in use, it is instructive both to describe its development and to contrast it with a competing design that also employed semiactive laser guidance.

In the summer of 1965, the Texas Instruments laser-guided bomb proposal actually arrived at Wright-Patterson's Limited War Office through the back door. With a broad charter to respond quickly to deficiencies communicated from Vietnam, this agency was under no obligation to fund a request from Eglin. However, because of Colonel Davis's considerable clout, rather than squelching the initiative, the civilian in charge of this office forwarded the proposal to a trusted aerospace contractor, North American Aviation's Autonetics division, for evaluation. Based on the concept's merit, the Limited War Office elected to give both Texas Instruments and Autonetics two months to prepare oral presentations, at which time one contractor would be selected.[38] So, without initial government funding, Weldon Word's small team set to work hammering out the details

[38]Word, 2001 Interview, 2.

of their hastily contrived initial proposal. It was during this critical two-month period that members of Word's team made early contributions that significantly shaped the weapon's final design in ways that further deviated from the established paradigm.

One important contributor on the Texas Instruments team was a retired Navy pilot named Jack Sickle. As the team hastily toiled to translate an obviously unworkable preliminary proposal into a functional design, Sickle repeatedly advocated simplicity, imposing his hard-earned, real-world experience on the group's technological creativity so the resulting weapon could become operational and have utility in a military setting. Having dropped bombs himself, Sickle was adamant that bombs go on airplanes without any attachments to them. If some enterprising team member proposed incorporating apparatus of any complexity, he was the first to attack the idea, reiterating the need to "keep it simple, keep it easy to fix, and make it able to be put on any pair of bomb shackles."[39] A survey of the existing technology revealed that most bomb and missile guidance systems employed comparatively complex and costly gyro systems. Such systems invariably required modification of the carrier aircraft, including electrical connectors to the bomb, warm up switches, trackers, display apparatus, and meters.[40] Sickle's greatest contribution to the success of the project was to convince Word and the others, very early on, that a bomb designed within this paradigm, even with the addition of laser guidance, would almost certainly cost too much, take too long to develop, and ultimately find little favor with the warfighters who might potentially buy and use it.

---

[39]Ibid.

[40]"Guidance Device for Sensing Direction of a Detectable Target," undated patent application circa 1967, TI Corporate Archives, 2.

Another early contributor was Dick Johnson, a renowned subsonic aerodynamic engineer who played a key role in the design of every missile built by Texas Instruments from the 1960s to the 1990s.[41] Not consulted during the initial proposal write-up, Johnson knew at first glance that a non-stabilized bomb, with its seeker attached to one stabilizer fin, would never work. In an attempt to find a more realistic seeker solution that would not violate Sickle's simplicity axiom, Johnson, Word and a young mathematician named Ron Hirsch finagled some weekend time on an analog computer at TI's central research laboratory to analyze angles of attack. In what can only be described as a "eureka moment," Word later recalled that "somewhere about six or seven o'clock Saturday night we were sitting there and Dick said, 'a Giannini probe—let's put this seeker in a Giannini probe!'"[42] Having worked on the development of the A-7 aircraft prior to joining TI, Johnson had used the boom-mounted, gimbaled, badminton birdie-shaped probes of this Italian-Swiss company to measure angles of attack during flight-testing. The decision to mount the laser seeker in such a probe was a stroke of genius, for it provided a simple means of measuring the angle between flight path and target, independent of angle of attack, and without gyro stabilization.[43] Although mathematical simulations run throughout the remainder of the weekend convinced them the idea would work, essentially Johnson invented the "birdie head" that would adorn the next three decades of precision weapons that Saturday night in 1965 (Figure 7).

---

[41]Roemerman, "Guided Missiles at Texas Instruments," 72; Johnson and Sickle, along with electrical engineer Robert Wagner, eventually shared TI's prestigious Patrick E. Haggerty Award with team leader Weldon Word in recognition of their role in the creation of laser guided bombs.

[42]Word, 2001 Interview, 3.

[43]Electronic mail to the author from Weldon Word, dated 27 November 2001.

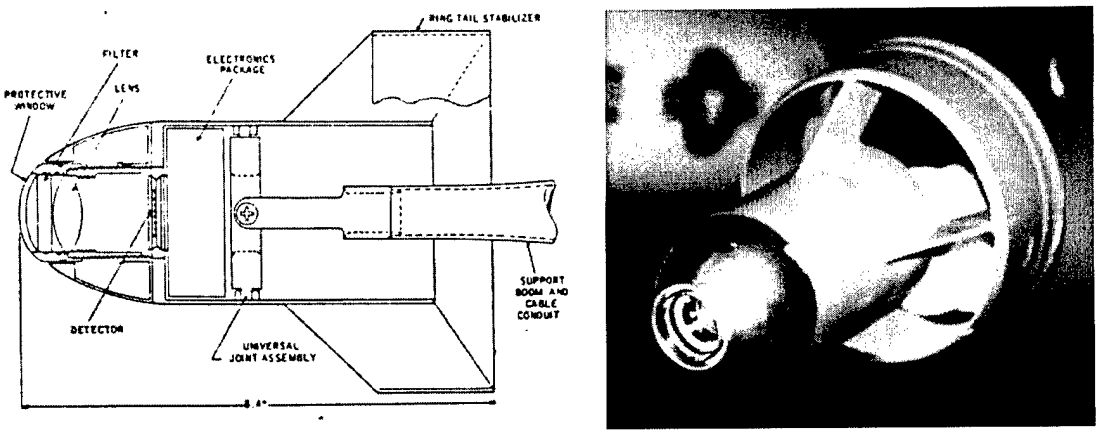

FIGURE 7
Laser Guided Bomb Aerodynamically-Stabilized Seeker Head

In mid-August 1965, Word and Johnson packed up their charts and flew to Dayton, Ohio, to present an oral defense of their simplified, refined proposal to build laser guided bombs. Before a somewhat hostile audience representing Air Force acquisitions, the Naval Weapons Center, and Army Missile Command, Word took the stage and displayed viewgraphs describing the key components of Texas Instruments' program. When he introduced the concept of the birdie head, the room erupted in laughter—no one had ever heard of such a thing, and there was little expectation that such a simplistic device could work. Both engineers made several attempts to clarify how such a seeker head assembly would work, effectively isolating the laser detector from the bomb's pitch and yaw motions while keeping it always aligned with the velocity vector, or direction of movement (Figure 8). Finally, David Salonimer, independently representing Missile Command, announced that he was convinced it could work, and, using the blackboard and his considerable reputation, finally succeeded in getting the rest of the audience to at least concede that the theory was sound. Not completely convinced that it could be made to work in practice, however, the civilian chief of the limited war office, Jack Short,

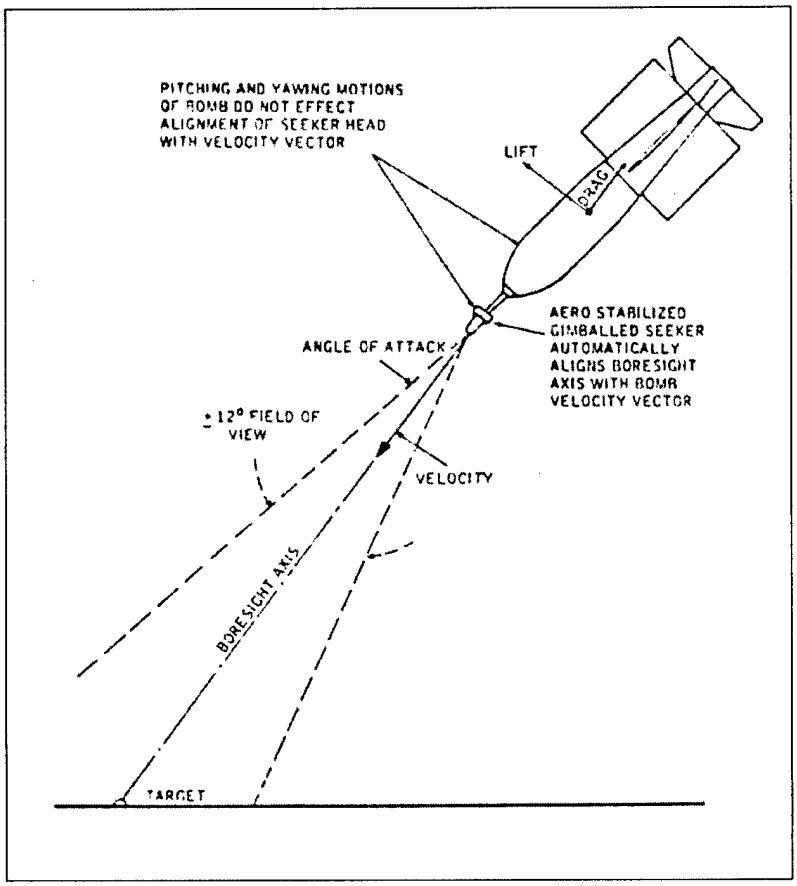

FIGURE 8
Simplified Diagram of TI Laser Guided Bomb Concept

hedged his bets by funding both Autonetics and Texas Instruments, with a derisive stipulation in the TI contract requiring them to subcontract the work to Autonetics in the event they could not meet their obligation within six months.[44]

Texas Instruments received the agreed upon $99,000 in September and had only until March 1966 to design and build a dozen prototype laser guided bombs. Induced by the

[44]Word, 2001 Interview, 3; Spires, "Guiding Light," 70—a simple explanation of how this TI guided bomb was to work will make the remainder of this study more understandable. In essence, the seeker head of this laser guided bomb had a circular field of view, creating a cone in the sky. Any bomb released outside this cone, or basket, would have the ballistic characteristics and accuracy of a conventional unguided bomb. The typical flight of a laser guided bomb has three phases: (1) the ballistic phase, a very brief period before the seeker registers, or acquires, the reflected laser energy, during which the weapon continues the unguided trajectory imparted by the flight path of the delivery aircraft; (2) the transitional phase—usually three to five seconds—characterized by rapid zig-zagging as the control system attempts to align the bomb's flight path with the seeker's line of sight to the target; and (3) the terminal phase, the remaining time of flight during which oscillations continue, but diminish in amplitude and frequency.

harsh constraints of time and money to cut corners wherever possible, the TI design made full use of existing technologies and practices. In fact, aside from the seeker head and the laser designator, almost every element used was tried and true. At the core of the design was an existing general purpose bomb, the 750-pound M-117, to which were attached four guidance components: aerodynamically stabilized seeker head, guidance electronics, control assembly, and wings.[45] In an ill-advised attempt to house the entire guidance kit in a single detachable tail assembly, while keeping the birdie head in a free flow area, the first iteration situated the seeker beneath the bomb on struts (Figure 9).

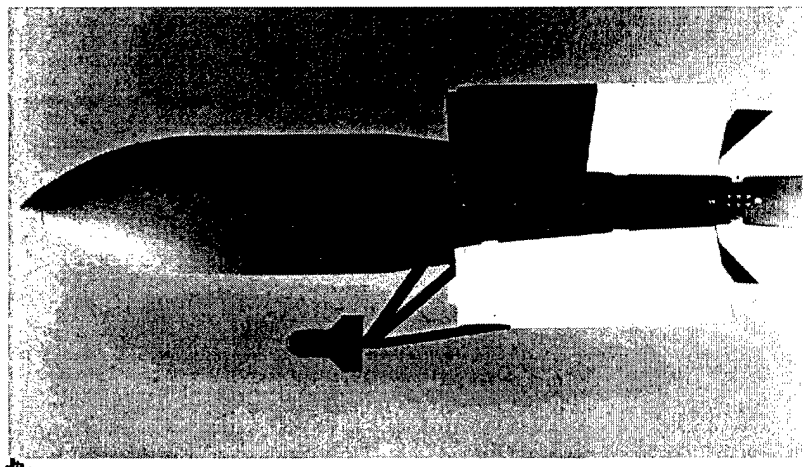

FIGURE 9
Original Texas Instruments M-117 Laser Guided Bomb Design

Realizing that such a configuration introduced undesirable aerodynamic effects and potentially obstructed the target, the seeker head was quickly moved to the nose of the bomb, with an electrical conduit connecting it to the tail section. In this final configuration, the assembled bomb weighed approximately 925 pounds and measured almost nine feet in length, with a maximum diameter of sixteen inches (Figure 10).

[45]U.S. Air Force Systems Command, "Development and Flight Test Evaluation of the M-117 Laser Guided Bomb," December 1969, DTIC AD Number 518403, 5-6.

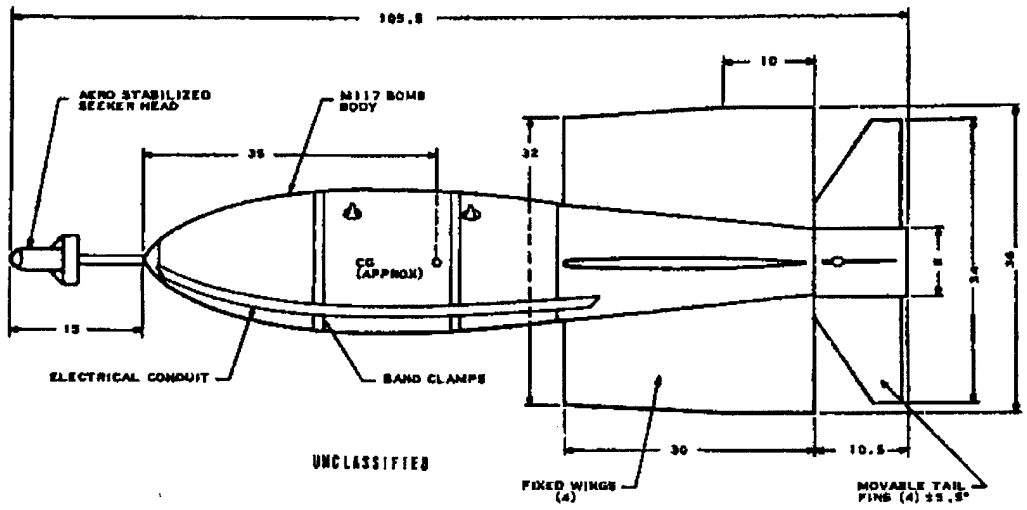

FIGURE 10
M-117 Guided Bomb Configuration

The tail-mounted subassemblies, which included guidance electronics, control hardware, and external control surfaces, were intentionally engineered using available technology wherever possible. For example, the guidance computer, which consisted of just five printed circuit boards to perform the relatively simple comparator and control logic, was indistinguishable from the electronics trays used in the Shrike anti-radar missile. Even so, this guided bomb benefited from relatively novel semiconductor technology, including transistors and early integrated circuits unimaginable to the generation of engineers involved in previous attempts at precision bombing (Figure 11).[46] The control hardware was similarly a Shrike hand-me-down, and retained that missile's innovative "bang-bang" design. In order to keep the mechanism as simple and reliable as possible, each pair of tail fins shared a common shaft. To keep the bomb continuously gliding toward its intended target, control fins were driven to the maximum 5.5 degree stop in one direction or the other when a correction was needed, and returned to the

[46]Ibid., 5, 22.

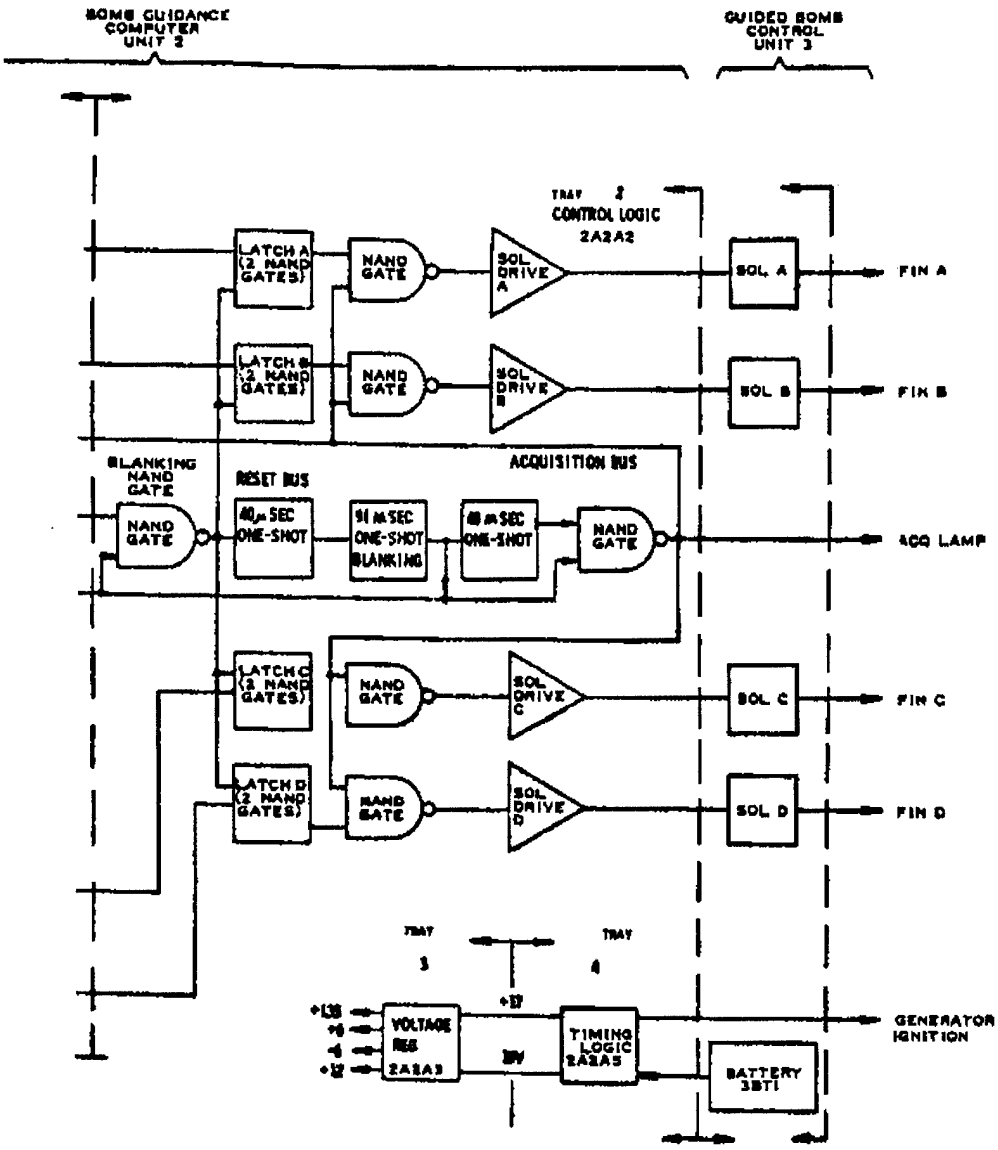

FIGURE 11
Guidance Computer Block Diagram

neutral or trail position once the laser energy had again centered on the detector assembly.[47] Thus, the term "bang-bang" derived from the characteristic sound resulting from the numerous, rapid corrections during the terminal phase of flight, clearly audible to early test engineers and other observers.

[47]Ibid., 6.

The final components of the tail assembly, the wings and fins, were not directly transferable from Shrike. What was needed were surfaces large enough to render a 900-pound "blivet" controllable, yet small enough to fit on the standard bomb stations of a fighter aircraft. Because of the constraints imposed by this initial contract, Texas Instruments could ill-afford to run costly and time-consuming wind tunnel testing, and yet there was very little margin for error. Once again, the team's aerodynamicist, Dick Johnson, innovated by building ten-inch tall models of the M-117 bomb and dropping them in a swimming pool to get data. Having calculated that the dynamic pressure of interest was only a few miles per hour in water, he was able to confirm stability and maneuverability of the proposed configuration quickly and cheaply this way. Once the actual dimensions were determined, fins for the first dozen prototype bombs were sawed from 5/16-inch sheet aluminum in the company's model shop one weekend. Interestingly, when TI finally had the luxury of running extensive wind tunnel testing about three years later, several hundred thousand dollars were spent confirming what Johnson had essentially figured out on a shoestring.[48]

Something more needs to be said about both the seeker head and laser designator, clearly the two most original, and consequently unproven, technological components of the project. The birdie head itself, already described in some detail, was the first critical breakthrough in developing a functional laser seeker. In addition to its aerodynamic housing, the seeker head contained an optical detector assembly consisting of a transparent protective dome, an optical band pass filter allowing passage of only a narrow frequency band-width in the region of the laser source wavelength, and a focusing lens to

[48]Word, 2001 Interview, 4.

concentrate the filtered laser energy into a blur circle on the active surface of the detector unit (Figure 7).[49] At the aft end of this optical barrel was mounted a circular wafer of silicon the size of a quarter, covered with photodiodes, and divided into four quadrants. In flight, if any quadrant received more laser energy than another, an electronic signal was sent to the appropriate pair of tail fins to change the bomb's glide path and center the energy. Thus, the aero-stabilized, gimbaled seeker head interfaced straightforwardly with the simple, two-axle, bang-bang control servo system to achieve guidance accuracy without using expensive gyros, accelerometers, or position feedback potentiometers.[50]

Ironically, the first serious problem encountered by the development team was the acquisition of a reliable detector. At the time, Texas Instruments was arguably the world's leading semiconductor company, and yet when Word's team went across the street to enlist the aid of their corporate "brothers," there was little interest. With such a limited initial demand, and requirements for such a highly specialized material, TI managers were reluctant to engage in a venture that promised so little profit. The key to the detector was the basic silicon substrate, which had to be of a special type. It was quickly determined that only a handful of companies possessed the capability to manufacture detectors of the required composition. Team engineers Bob Wagner and Ken Goldstein quickly formalized a lasting business relationship with Harshaw Chemical Company to develop and provide the requisite detectors.[51]

---

[49]R.H. Johnson, K.S. Goldstein, J.A. Sickle, and V.L. Reierson, "Laser-Guided Bomb (Tail Control) Technical Paper," 20 April 1967, TI Corporate Archives, 4-5.

[50]Ibid.; TI, "Guidance Device for Sensing Direction," 7.

[51]Electronic mail to the author from Robert Wagner, dated 27 November 2001; specifically, the silicon had to be pure enough to prevent signal leakage, which would result in an unacceptably low signal to noise ratio. The cooperative arrangement with Harshaw proved to be extremely profitable and durable—in 1981, divisions of Harshaw, International Rectifier, and Texas Instruments merged to form Texas Optoelectronics, Inc., which is still providing laser guided bomb detectors.

Another early challenge was with the laser designator itself. A functioning guidance kit, even when mated to a powerful bomb, would produce a weapon no more useful than the existing dumb bombs without an effective laser subsystem to illuminate, or "paint," the target. Developed independently by Martin-Orlando, with David Salonimer acting as government liaison and consultant, the earliest neodymium glass rod lasers used were of marginal quality, lacking portability, reliability, and data rate. For initial bomb testing, Salonimer provided the TI team a single laser that was mountable on a tripod, but required several briefcases full of ancillary equipment. In order to provide smooth guidance, TI wanted a high data rate, perhaps several hundred pulses per second. Originally struggling to achieve more than three to five, Martin eventually agreed to a data rate of ten pulses per second. Fortunately, given the forgiving nature of the heavy "blivets" being guided, this pulse rate proved adequate and endured for decades despite subsequent advances in laser technology. In order to ensure that the bomb's seeker head guided only to the reflected laser light, and not some other proximate light source, both the illuminator and optical detector were calibrated to emit and receive, respectively, only monochromatic light with a wavelength of 1.06 microns.[52] Because this infrared light falls outside the visible spectrum, during initial seeker testing in early 1966—which involved lasing a distant water tower in Dallas and looking at returns—engineers frequently held a piece of Polaroid film out in front to ensure the laser was working.[53]

Additional tests conducted in March 1966 clearly demonstrated that all major components of the Texas Instruments prototype were functional, and that detectable reflected laser energy was more than adequate for guidance signal processing. Having

[52]Systems Command, "Development and Flight Test," 73.
[53]Word, 2001 Interview, 5.

fulfilled initial contract requirements, the project moved to Eglin AFB, Florida, for flight testing beginning May 25, 1966. After successful captive flight tests, the first unit was dropped on July 28, striking approximately 148 feet short of the target. The second bomb halved that figure to 76 feet two weeks later, while units three and four missed their targets by several hundred feet. In order to determine the causes of these early successes and failures, Texas Instruments engineers analyzed detailed flight data after each test. Once again, however, expediency had precluded extravagance, and rather than captured telemetry, the team relied upon a small crash recorder the size of a one-pound coffee can for mission analysis. Finding the data recorder after each flight turned out to be a serious challenge, because of the bomb's unpredictable path through sand and clay, and the inordinate volume of previously dropped munitions on Eglin ranges. Fortunately, Colonel Davis took a personal interest in the test outcomes and mobilized every piece of earth moving equipment on his base to recover each flight recorder.[54] Using the recorded information, TI engineers were able to quickly isolate correctable problems for each failure—for example, up, down, right, and left had been wired backwards on the fourth unit—resulting in dramatic improvements after the first four drops.[55]

Historically, guided weapons, including those discussed in previous chapters, have exhibited a logarithmic performance improvement curve during early phases of development. Excluding the two guidance failures already noted, TI's first ten laser-guided bombs not only followed such a curve, but did so under increasingly challenging delivery conditions. Emboldened by a miss of just twenty-eight feet with bomb #5, dropped from 13,000 feet on October 28, the program manager, nominally Air Force

[54]Johnson et al, "Laser-Guided Bomb Technical Paper," 9-10; Word, 2001 Interview, 4.
[55]Johnson et al, "Laser-Guided Bomb Technical Paper," 12; Word, 2001 Interview, 5.

civilian Vernon Reierson, but *de facto* Colonel Joe Davis, decided it was time to demonstrate tactical capability. Without alteration, except for the late night grooming of the target area already mentioned, bomb #6 replicated the previous results, but against an Army two-and-a-half ton truck. Having surpassed the design goal of 30-foot CEP twice, exuberant test managers next intentionally offset the aim point by 1,000 feet, yet impact was still only twelve feet from the target panel. Anxious to prove the new weapon's utility and versatility, bomb #8 was dropped on December 15, 1966, using an airborne illuminator for the first time. With the Martin laser head mounted on a rifle stock and aimed at the target from the backseat of an O-1 Birddog forward air controller aircraft one mile away, and despite an intentional 500-foot offset in aim point, the miss distance was officially scored as ten feet, with part of the impact crater actually beneath the target panel.[56] Thus, despite increasingly difficult test parameters, bombs five through eight showed consistent improvement, with an average miss distance of just 19.5 feet.

Even before testing concluded, Colonel Davis was convinced he had a weapon of unprecedented potential and began maneuvering to "sell" it to Air Force leadership. As a first step, he introduced Weldon Word to the officer at the Pentagon responsible for research and development, Major General Andy Evans, and began sending Word to Washington to personally brief each test result. Following the string of successes in the closing months of 1966, General Evans indicated overall support for development of this weapon, but first wanted to know if it could also guide a 3,000-pound M-118 general-purpose bomb. Without hesitation, Davis assured him it could be done, and then directed Word's team to attach guidance kit #10 to the bigger bomb. Although the original

[56]Johnson et al, "Laser-Guided Bomb Technical Paper," 12.

contract called for a dozen prototypes, cannibalization for spare parts throughout testing made it increasingly difficult to assemble an entire set of working hardware by the eighth and ninth drops. Consequently, the final three units were consolidated to create a single guidance kit, which program managers agreed would be the last deliverable of the $99,000 contract. Slight alterations were made to accommodate the aerodynamics of the larger bomb, following Dick Johnson's recommendation, and a wooden footbridge was constructed over a plastic-lined pool of water at the Eglin range to provide a suitable target. After a month of groundwork and captive flight tests, Word and electrical engineer Bob Wagner delivered the final bomb to a technician for loading, then flew to Washington to brief General Evans. In a chain of events that could not have been better scripted in Hollywood, the bomb obliterated the bridge ten minutes before their afternoon meeting.[57] Not surprisingly, Air Force interest in a follow-on contract was immediate.

Winning and Losing Technologies

By January 1967, Texas Instruments had demonstrated a technological capability that had been highly sought-after for decades but never before achieved. The foregoing analysis of necessary and sufficient conditions goes a long way toward explaining why this particular group succeeded where so many others had failed, but the counterexample of a contemporaneous competing technology should further clarify what made this a winning technology. Although there is no evidence that engineers on the Texas Instruments project reviewed earlier guidance work, such as J.P. Molnar's work on Azon, in general, technological capabilities are only built up over time through the accumulation of networks and specialization. So, while Word's team clearly had neither

[57]Word, 2001 Interview, 6.

the time nor inclination to peruse National Defense Research Committee archives, they were, nevertheless, beneficiaries of an engineering practice whose specialties had devolved from this earlier work. In fact, aerospace engineers in the 1960s, as today, likely took for granted the then-current state of the art, without feeling compelled to historicize it. However, even a cursory review of the World War II high-angle dirigible bomb project reveals innovative solutions to numerous technological bottlenecks that clearly anticipated and facilitated laser guided bomb development.

As noted, when Gulf Research and Development Corporation designed the radio-controlled Azon 1,000-pound bomb, the project was simplified by housing the requisite gyros, batteries, radio receiver, antenna, and flare within a tail structure that was easily mounted on a standard M-65 general purpose bomb.[58] Similarly, while proportional control had originally been thought necessary and used in early Azon tests, a simple radio link using on-off control proved adequate. Thus, both Azon and Razon incorporated an early "bang-bang" control method, sans catchphrase. It was also early in the Azon project that Gulf implemented "an elaborate program of complete instrumentation of field tests which was destined to pay big dividends." Engineers involved in the Azon and Roc projects later noted that "it was only when complete and accurate instrumentation made it possible both to determine the causes of failure and to measure the effects of variation of design parameters that progress became more than sporadic."[59] Before television bombs gave way to Azon, this same group of engineers noted that a television camera mounted rigidly along the bomb axis made target acquisition and bomb steering extremely

[58]Joseph C. Boyce, *New Weapons for Air Warfare: Fire-Control Equipment, Proximity Fuzes, and Guided Missiles,* Science in World War II—Office of Scientific Research and Development (Boston: Little, Brown and Company, 1947), 258.

[59]Ibid., 230, 242, 257.

difficult, prompting experimentation with vanes, or "ears," that would project into the wind stream and aim the television eye along the tangent to the trajectory. Finally, when the absence of radar equipment in expendable quantities led to the use of a photoelectric homing eye as an interim testing device in the Roc program, an innovative four-quadrant photoelectric cell was used for locating the target.[60] Once again, the implication here is not that Word's team plagiarized earlier ideas but only that without the benefit of such built-up constituent technologies, producing a functioning laser-guided bomb in less than eight months simply would not have been possible.

Even so, North American Aviation's Autonetics division had access to this selfsame engineering practice during the same eight-month period, yet produced a solution that, with hindsight, can only be classified as a technological loser. A comparison between the Autonetics and Texas Instruments designs will highlight those factors that contributed most directly to the failure of the former, and the success of the latter. Under very similar time and budget constraints, the Autonetics design team also quickly settled on a simple configuration that made maximal use of proven technologies. Externally, the Autonetics bomb was even simpler than the TI design, since the entire guidance package was housed in a detachable, seventy-pound nose section that mated easily to a general-purpose M-117 750-pound bomb with standard M-131 tail fins (Figure 12).[61] By maneuvering the bomb using forward-mounted canards, this design completely eliminated the need for wings, controllable tail fins, and the troublesome conduit that ran the length of the TI bomb. Realizing that basic component research and development would place the program in a

[60]Ibid., 252, 257.

[61]U.S. Air Force Systems Command, "Engineering Evaluation of the Autonetics Laser Guided Bomb," May 1967, DTIC AD Number 382168, 2-3.

risk position, Autonetics selected hardware with a history of successful use whenever possible. Thus, the canard actuator motor and pickoff, roll gyro, battery, and power supply were all stock components, while electronics, including integrated circuits, were all catalog items.[62] Although off-the-shelf laser detectors obviously did not exist in 1966, the Autonetics seeker cleverly incorporated a modified Sidewinder missile tracking head, recycling proven technology in much the same way TI tapped Shrike.

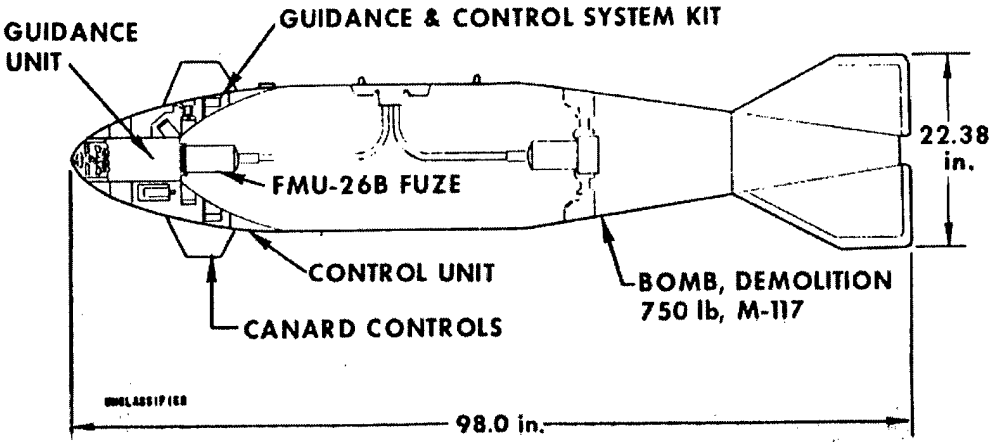

FIGURE 12
Autonetics Laser Guided Bomb

Not surprisingly, the Autonetics design had much in common with its Texas Instruments rival, the result, no doubt, of a shared, inherited practice. In addition to the standard warhead used, Autonetics also incorporated a four-quadrant silicon detector and a 14-track impact-resistant flight recorder to track bomb guidance system parameters during field-testing. Where the two designs diverged, most notably in the choice of gyro-stabilization and proportional versus "bang-bang" control, Autonetics had every

[62]U.S. Air Force Systems Command, "Laser Terminal Guidance Development Program," September 1967, DTIC AD Number AD384590, 18.

confidence that these technologies could be successfully implemented. During the development of the television-guided predecessor to Azon, MIT researchers attempted control using a cylindrical coordinate system without roll restriction. During testing, however, experience proved that "the easier solution was not the better," and eventually all NDRC missiles were roll-stabilized and controlled in Cartesian coordinates. Further, while on-off control had proven adequate for Azon and its progeny, it was found that Roc "responded more enthusiastically to slight shadings of control, and it was determined that proportional control was necessary."[63] In fact, the entire Autonetics design was well grounded in established practice, and it showed every likelihood of competing well against the Texas Instruments variant in head-to-head competition.

Having developed prototype weapons in accordance with the provisions of their contract, the Autonetics team moved to Eglin and began flight-testing on July 18, 1966. Using a ground-mounted Martin laser, target panels, and bomb release parameters identical to those used in the first Texas Instruments tests, Autonetics laser-guided bombs began showing the logarithmic improvement characteristic of guided weapons. Unit #1, dropped on October 5, 1966, was a complete failure—bomb roll control could not be maintained, and the bomb did not guide, resulting in a 975-foot miss distance. After a complete revision of the roll control system, unit #2 was a partial success, missing the target by only 82 feet, even though the bomb did not completely maintain roll stability. After performing a second series of wind tunnel tests from November 15 through December 3, the roll control system was further refined, and canards were actually decreased slightly in size. As a result, units #3 and #4 produced successful results, with

[63]Boyce, *New Weapons for Air Warfare*, 242, 253.

miss distances of 24 and 52 feet respectively.[64] On the surface, the Autonetics bomb appeared to be a viable technology, in simple need of further refinement. However, on January 23, 1967, after expending only four prototypes, the Air Force cancelled all further testing "because of higher priority programs."[65] Despite distinct advantages as an established aerospace contractor, the coincident results of their marginal fourth drop and TI's spectacular, bridge-splintering drop #10 convinced Air Force leaders to curtail the Autonetics contract and declare Texas Instruments the winner.

While this might appear the random, artificial selection of one technology over another, in fact, there was little of the capricious or arbitrary involved. It is likely, based on initial test results, that the Autonetics design could have been further refined to produce consistent, pinpoint accuracy. However, intrinsically it was vastly more complicated than the TI design, making its likelihood of matching this rival in either performance, reliability, or cost almost nil. For example, the entire seeker assembly was mounted on gimbals and driven by deflection coils to track the target. Guidance commands originated from three separate sources: (1) target tracking to keep the rate at which the seeker moved to track the target at zero, (2) roll control, which used sensors on the roll gyro to generate appropriate neutralizing signals, and (3) pitch bias to maintain bomb stability in this axis. All three were then combined at each canard, which was driven independently by an electric motor, using proportional control, to a maximum of five degrees in the pitch and yaw axes, or fifteen degrees for roll guidance.[66] All things

[64]Systems Command, "Evaluation of Autonetics Laser Guided Bomb," 13-14.
[65]Systems Command, "Laser Terminal Guidance," 101, 105.
[66]Systems Command, "Evaluation of Autonetics Laser Guided Bomb," 2-5.

being equal, it is certainly understandable that the Air Force would privilege the simpler, less costly technology. However, other factors were far from equal.

While the technophiles of the twentieth-century Air Force might well have found the greater complexity of the Autonetics design acceptable, assuming it could be made to produce reliable results, it is unlikely they would ever have found the concomitant operational restrictions palatable. By the design team's own admission, the release sequence for the Autonetics laser guided bomb was not conventional. In fact, it was a complicated, multi-step procedure that required the pilot to point the aircraft in a dive within two degrees of the illuminated target until the bomb acquired the target, switch the bomb to tracking mode, initiate a pull-up to achieve a depression angle to the target, and then, two to three seconds prior to release, but before pulling up more than sixteen degrees from the original acquisition dive, switch the bomb to internal power and fire the bomb's roll gyro.[67] Of course, the requirement for pre-launch interface with the bomb necessitated aircraft modifications, including installation of special wiring to each armament pylon and a cockpit control and display box. Furthermore, while carrying the Autonetics bomb, fighter aircraft were limited to a paltry turn rate of six degrees per second to prevent damage to the seeker head—hardly a desirable combat feature. Finally, these and other operating limitations were further underscored in the final test report by the twin disclaimers that "if the bomb loses track on the target because of clouds...or other causes, the bomb will fall ballistically because it cannot reacquire the target," and, in an admission reminiscent of the fatal Tarzon salvo hazard, "if the bomb power supply fails before bomb release, release may be unsafe because of aerodynamic

[67]Ibid., 5, 8.

bias in the free-streaming canards."[68] In contrast, the Texas Instruments weapon was a paragon of operational simplicity, as revealed in the following patent description:

> The guided bomb can be delivered from an unmodified aircraft in the same manner as a conventional bomb. There is no requirement for target lock-on or bomb guidance tracking before launch. Electronic circuits are activated by a simple bomb fuse-type arming wire that is withdrawn from a spring loaded switch when the bomb is released from the airplane. This activates the battery which is housed in the control section and provides sufficient electrical power for the system to operate.[69]

The emergence of this promising precision-guidance technology in the mid-1960s was more than mere coincidence. Clearly, a national security policy and air power doctrine compatible with enhanced bombing accuracy, antecedent technologies upon which to build, and wartime demand to focus resources, were all conditions necessary for the creation of such a specialized capability. While it is tempting to credit the emergent laser and semiconductor technologies of this period with finally breaking the bottleneck that had limited the progress of precision guidance for so long, they were only part of a more fundamental change. In fact, a paradigm of radio-control and gyroscopes circumscribed previous attempts at bomb and missile guidance, as reflected in the Azons of the 1940s, the Tarzons of the 1950s, and even the Navy's Bullpup and other sophisticated precision weapon attempts of the early 1960s. When Autonetics incorporated lasers and silicon chips, the resultant bomb, still a product of the old paradigm, was not unlike Ptolemy's astronomy of compounded circles, whose complexity Thomas Kuhn once described as "increasing far more rapidly than its accuracy."[70]

---

[68]Ibid., 20.
[69]TI, "Guidance Device for Sensing Direction," 10.
[70]Kuhn, *Scientific Revolutions,* 68.

Just as Copernicus's rejection of the Ptolemaic paradigm resulted in a revolutionary astronomy, and, to use Constant's technological example, rejection of the convoluted piston engine-propeller paradigm heralded a revolution in jet-age air travel, so, too, the Texas Instruments team led by Weldon Word created a bomb of unprecedented accuracy, not by taking the next logical step, but by constructing a radical new approach to the problem. Previous attempts at precision had frequently satisfied the developers and proponents of the technology, without satisfying the potential users. Texas Instruments' straightforward implementation of semiactive laser guidance promised the elusive "surgical strike" capability in a form that airmen found not only acceptable, but appealing. Rapidly introduced into combat in Vietnam, this new technology, unlike so many predecessors, was not a disappointment. In fact, as it came of age, it would prove to be a harbinger, signaling a host of often-revolutionary changes in military tactics, strategy, and doctrine, with profound national security policy implications.

5. – Vietnam: Precision Guided Munitions Come of Age

On March 30, 1972, as American troop strength in Vietnam fell to a seven-year low, well below the 100,000 mark, North Vietnam launched a massive, three-pronged conventional invasion into South Vietnam. Unwilling to send U.S. troops back to Vietnam, yet determined to stabilize South Vietnamese lines, President Richard Nixon responded with Operation Linebacker, a massive, sustained air campaign designed to smother this Easter Offensive. Within one week, the President recommitted F-4 fighters, B-52 bombers, and Navy aircraft carriers that had withdrawn from Southeast Asia, and reinstated sustained bombing over North Vietnam for the first time since November 1968. Subsequent aerial attacks against a variety of targets in the north, including the highly-publicized B-52 strikes at Hanoi and Haiphong, arguably blunted the attack and eventually persuaded the North Vietnamese to resume peace negotiations. However, as twelve North Vietnamese army divisions supported by armor and artillery swarmed across the demilitarized zone and the Laotian and Cambodian borders, the most urgent need was for close air support of friendly troops. In response to the southernmost prong, which penetrated Military Region III from Cambodia near the Mekong Delta and menaced Saigon itself, U.S. Marines held at the My Canh River Line, their meager numbers augmented by coordinated air cover. On the evening of May 10, a Marine observer in the church tower at My Canh spotted two enemy tanks several miles north of the river. An Air Force forward air controller, there within minutes, circled the target and identified a PT-76 tank attempting to tow a stranded T-54 tank from a dry stream bed. After making several calls, the controller was finally handed two F-4s, Schlitz and Raccoon, but was warned that fuel constraints gave them only about three minutes of

"playtime." As the Marines watched, the first pass scored a direct hit on the PT-76, blew its turret off, flipped it over, and covered the second tank with mud. The same fighter quickly came over the top for a second pass, this time striking the T-54 in the turret with spectacular results, as shrapnel spread in a fan shape and set fire to dozens of enemy vehicles on the highway several hundred yards away. The Marines had never witnessed such a firepower display, and began "jumping up and down, very excited about this new secret weapon." In response to the Marine observer's query as to what in the world they had used, the controller simply told him "it was a 2,000-pound laser-guided bomb."[1]

A Most Versatile Mix of Munitions

In 1965, as the United States embarked upon its second limited war of the twentieth century, Joe Davis and Texas Instruments were not the only ones to realize that aerial bombardment in Vietnam suffered from serious deficiencies. However, rather than a single, soluble problem, the tactical bombing situation during the Rolling Thunder campaign derived from two very different air wars, each with its own unique set of challenges. In North Vietnam, F-105 and F-4 aircraft were used primarily in an interdiction role, with the objective of destroying the logistic transportation complex that supported enemy operations in South Vietnam. Typical target objectives for such missions included railroads, highways, choke points, bridges, trucks, maintenance facilities, petroleum storage tanks, steel plants, and military installations. These large, mostly fixed targets presented reduced detection problems, but tended to be hardened and extremely well defended. In South Vietnam, by contrast, jet fighters were employed

[1]Ray E. Stratton, U.S. Air Force Oral History Interview, 16 July 1975, AFHSO, Bolling AFB, D.C., file number 31394-1221, 14-15; Headquarters Pacific Air Forces, "Linebacker: Overview of the First 120 Days," 27 September 1973, AFHSO, Bolling AFB, D.C., file number CHECO-K717.0413-208, 8-13.

predominantly to deliver weapons against Vietcong troop concentrations and facilities in direct support of ground forces. Because such targets were generally small, elusive, and highly mobile, they were extremely difficult to detect from the high-speed F-100, F-105, and F-4 aircraft in common use.[2]

In order to obtain successful results without assuming unacceptable risk, a wide variety of technological innovations were introduced during the early years of the war. Not surprisingly, highly specialized munitions and tactics evolved in response to the diverse challenges encountered in Vietnam. Early innovations were frequently adaptations of successful predecessors. For example, to help fast-moving jet pilots find highly mobile and easily concealed targets in South Vietnam, the Air Force adapted a Korean War technique, establishing a sophisticated network of airborne forward air controllers equipped with light Cessna aircraft and target-marking smoke rockets. Similarly, to create an all-weather bombing capability in North Vietnam, the Air Force returned to the same basic radar technique that had facilitated bombing at night and in bad weather in both World War II and Korea. Establishing a mountaintop AN-MSQ-77 radar bomb facility in Laos, in 1967, just 160 miles west of Hanoi, allowed ground radar to continue throughout the war as the main method of all-weather bombing in Laos, Cambodia, South Vietnam, and the lower portions of North Vietnam, with a CEP of approximately 500 feet—roughly the same as for dive bombing.[3]

Of course, even new technologies did not spring from whole cloth during Vietnam—antecedents invariably presaged each "new" development. However, it is instructive to

---

[2]R.H. Johnson, K.S. Goldstein, J.A. Sickle, and V.L. Reierson, "Laser-Guided Bomb (Tail Control) Technical Paper," 20 April 1967, TI Corporate Archives, 1-2.

[3]William W. Momyer, *Airpower in Three Wars* (New York: Arno Press, 1980), 178-79.

examine how specific military factors, such as new enemy capabilities or perceived shortcomings, helped determine which technological novelty was pursued during the war. Although outside the purview of this work, a specialized subset of precision guided munitions, anti-radiation missiles, together with sophisticated airborne electronic countermeasure capabilities were rapidly developed and enhanced throughout the war, largely in response to the enemy's increasingly sophisticated surface-to-air missile threat. The development of the celebrated Wild Weasel program in reaction to the appearance of SA-2 missiles in Vietnam in July 1965 is but one example of such acquired capability.[4] However, while such technological developments ostensibly improved bombing results in the high-threat environment of North Vietnam, they did so at tremendous cost. Increases in the ratio of support to attack aircraft eventually resulted in single missions involving eighty aircraft or more, with only fifteen to twenty percent actually dropping bombs.[5]

In an attempt to solve the lingering problems of surface-to-air missile vulnerability and lack of all-weather capability in the North, the Air Force deployed recently acquired F-111 fighters to Southeast Asia in March 1968. Having implemented radar bombing the previous year as a means of keeping pressure on the enemy during interminable periods of bad weather, the Air Force was forced to abandon this method in the high threat area around Hanoi when it became apparent that the requisite stabilized bomb run over the final sixty miles left strike aircraft extremely vulnerable to surface-to-air missiles. In addition, ground radar was found to be unreliable at its range limits, posing the risk of politically unacceptable collateral damage in such a populous area. The F-111, equipped

[4]Patrick K. Barker, "The SA-2 and Wild Weasel: The Nature of Technological Change in Military Systems" (M.A. thesis, Lehigh University, 1994), 8, 113; although Wild Weasels employed an array of sophisticated technology, modification of existing Navy Shrike anti-radar missiles allowed rapid fielding.

[5]Momyer, *Airpower in Three Wars*, 236.

with variable-sweep wings and terrain-following radar, was intended for low-level bombing—below 200 feet if needed—to provide a low CEP, all-weather capability in the critical thirty-mile circle around Hanoi.[6] These capabilities, together with future enhancements, would eventually make the F-111 the preeminent precision guided munitions platform of the 1980s and early 1990s. However, during initial combat testing against targets far from the stringent conditions of the Hanoi area, three F-111s and their crews were lost in less than a month. When technicians determined that the severity of the terrain and high concentration of moisture during the monsoon period caused "false indications in the radar presentation to the pilot," all F-111 aircraft were returned to the U.S. for further radar work, after completing only fifty-five missions in Vietnam.[7]

Much of the technological novelty pursued during the early years of the Vietnam War resulted in specialized munitions, each designed with a particular aspect of the challenging combat theater in mind. At one extreme was the notorious BLU-82 "Daisy Cutter," a 15,000-pound bomb so ungainly that it was delivered by pushing it out the rear door of a cargo aircraft with a parachute to slow and stabilize its descent. Developed to create corridors through minefields, to clear helicopter landing zones in the jungle, and for use against ground forces, the BLU-82 was detonated just prior to impact by a four-foot protruding fuze to prevent its concussive energy from being dissipated in a crater.[8] While this weapon, like Tarzon in Korea, compensated for a lack of pinpoint accuracy with its large high-explosive payload, another approach was to disperse small bomblets

[6]Ibid., 179-81.

[7]Ibid., 181.

[8]Headquarters Pacific Air Forces, "The Air War in Vietnam: 1968-1969," 1 April 1970, AFHSO, Bolling AFB, D.C., file number CHECO-K717.0413-75, 54; see also Duncan Lennox, ed., *Jane's Air-Launched Weapons* (Coulsdon, England: Jane's Information Group Limited, 1999) for details of this and other munitions with the Bomb Live Unit (BLU) designation—although never tested in the mineclearing role in Vietnam, a single BLU-82 proved capable of clearing a three-mile path through minefields in Iraq.

over a large area, shotgun style. Such cluster bomb units, or CBUs, were a refinement of fragmentation munitions developed during the early 1960s, and, although primarily antipersonnel weapons, were used extensively in Vietnam against small, high-value targets such as antiaircraft emplacements and trucks by 1968.[9] Resembling a hard bomb, at a preset altitude the CBU bomb casing typically split in two, dumping the bomblets in a large doughnut-shaped pattern. In another variant, particularly effective against trucks and other road targets, the bomb casing remained attached to the aircraft, dispensing bomblets out the rear of the casing as long as the bomb release button was depressed.[10] Thus, in the quest for an effective air weapon in Vietnam, it was not uncommon for specialized weapons to be refined through further specialization.

After several years of such iterative weapons development, achieving increasingly refined levels of specialization, the United States eventually found itself in possession of a dizzying inventory with which to prosecute the air war in Vietnam. As one 1970 Air Force evaluation noted, the great variety of bombs alone used in the Southeast Asia conflict included "big bombs (15,000 pounds), little bombs (a pound or less), and a whole spectrum in between; special purpose bombs, armor piercing, smoke, incendiary, high drag, low drag, cluster bombs, and a myriad of others."[11] Obviously, each of these munitions was created in order to effectively neutralize a perceived threat, creatively using technology to overcome ongoing limitations in bombing accuracy. Highlighting the end result of all this specialization, an interim report on the air war in Vietnam noted

[9]Guenter Lewy, *America in Vietnam* (New York: Oxford University Press, 1978), 266-67.

[10]Unpublished personal history of Clinton G. Gillespie, Colonel USAF Retired, 20 July 1985, Personal Files of author, 96-97; designed to cover a long, narrow area, this latter variant was somewhat dangerous to deliver, since the pilot had to wait a full second after letting up on the bomb release button before taking evasive action, or risk blowing the tail section off the aircraft.

[11]Headquarters Pacific Air Forces, "Second Generation Weaponry in Southeast Asia," 10 September 1970, AFHSO, Bolling AFB, D.C., file number CHECO-K717.0413-80, 1.

with apparent pride that "the munitions available for the 1969-1970...campaign formed the most versatile mix ever available" to the Air Force.[12] Of course, such diversification of ordnance was not universally positive. Maintaining such a vast inventory of weaponry not only complicated logistics issues, requiring the correct quantities and mix of weapons at numerous bases, but also created a challenging operational environment in which the appropriate munitions had to be precisely matched to each sortie, correctly anticipating all threats and targets to be encountered. For combat mission planners in Vietnam, tables on weapons effects, probabilities of target destruction, and ballistic characteristics alone swelled to fill entire shelves, greatly complicating decisions regarding which specific tool to use when and where.[13]

Consequently, in an attempt to improve the efficiency of munitions in the Southeast Asia theater, Seventh Air Force charged its Directorate of Air Munitions in March 1969 to study the "proliferation of munition types," with the objective of limiting as much as possible the redundant munitions, and eliminating "those which had outlived their usefulness, so as to reduce system complexity."[14] In fact, by the end of 1969, Seventh Air Force reported substantial progress toward the accomplishment of this goal. However, the contemporaneous appearance and adoption of an entire new class of guided munitions was hardly incidental to this simplification trend. Most bombs in the pre-1969 inventory were ballistic in delivery. Aptly called "dumb bombs," they simply followed whatever physical set of ballistic characteristics befitted their peculiar aerodynamic makeup, speed, and angle of delivery, regardless whether aimed visually, computerized,

[12]HQ PACAF, "The Air War in Vietnam," 53.
[13]HQ PACAF, "Second Generation Weaponry," 1.
[14]HQ PACAF, "The Air War in Vietnam," 54.

or radar directed. During the Vietnam War, a new generation of weaponry, dubbed generically "smart bombs," underwent extensive combat testing. Rather than compensating for inaccuracy through elaborate effects, such munitions attempted to concentrate adequate firepower at the crucial point by actively seeking their target.[15] Numerous evaluations of such weapons throughout the war clearly revealed that certain approaches showed more promise than others. However, early results indicated the efficacy of pursuing the technology of precision guidance directly as one potential solution to many of the tactical bombing problems being experienced in Vietnam.

Breaking the Bottlenecks

The first precision weapon introduced by the U.S. military in Vietnam was not the laser guided bomb detailed in the previous chapter, but rather the Navy's Bullpup air-to-surface missile. Development of Bullpup originated in 1954, in the immediate aftermath of the Korean War, following a Bureau of Aeronautics recommendation to diminish the number of sorties required to destroy targets, and the number of aircraft lost in the process, by "using a simple guided missile system to deliver conventional bombs."[16] Developed and manufactured jointly by Martin-Orlando and Maxson Electronics of Long Island, Bullpup became operational in 1959 and was, thus, readily available at the outbreak of Vietnam. Not surprisingly, given its Korean-era roots, Bullpup had much in common with its predecessors, Razon and Tarzon. For example, it employed a radio command link for guidance, was visually steered to impact by a pilot or weapon systems officer using a joystick, and housed two high-intensity flares in the missile's tail section

[15]HQ PACAF, "Second Generation Weaponry," 1-2.
[16]Cited in Shelby G. Spires, "Guiding Light," *Air and Space*, April/May 1999, 67.

to aid tracking.[17] However, a number of technological innovations gave Bullpup capabilities and performance far superior to earlier guided missiles. No longer a freefall weapon, it used a Thiokol liquid fuel rocket motor to propel it to a range of some ten miles at speeds approaching Mach 2. The weapon's high velocity allowed it to be controlled effectively by four small canards, produced adequate lift from its cruciform tail fins, and virtually eliminated range errors associated with parallax.

Designated AGM-12, using a new nomenclature for *a*ir-to-ground *m*issiles, Bullpup technology was promising enough that it was made in at least four variants, and adopted for use by the Navy, Marine Corps, Air Force, and numerous NATO services, to be launched by a wide variety of aircraft against both land and sea tactical surface targets. The two primary types used in Vietnam were Bullpup A, which measured ten feet in length and carried a 250-pound warhead, and the scaled up Bullpup B, a thirteen-foot version with correspondingly larger diameter and control surfaces, and a 1,000-pound conventional high explosive payload. Nuclear and fragmentation versions were also developed but never saw combat.[18] While the Air Force deployed Bullpup with F-100, F-105, and F-4 squadrons in Vietnam, early reports noted at least three major concerns that limited the extent of its use there. First, its radio guidance system was initially unreliable, and proved vulnerable to jamming and other enemy countermeasures. Although further development allayed much of this technological shortcoming, a second, more serious criticism remained the restrictive flight parameters required for its delivery. After launching Bullpup on the appropriate line of sight from the aircraft to the target, the

---

[17]R.T. Pretty and D.H.R. Archer, eds., *Jane's Weapon Systems, 1973-74* (Huddersfield, England: Netherwood, Dalton & Company Ltd., 1974), 126.

[18]Ibid., 127.

delivery aircraft was required to maintain heading until weapon impact. As with Azon and Tarzon, this feature did little to endear the weapon to flight crews, who incurred considerable risk approaching well-defended targets head-on, bereft of the option for evasive action.[19] Finally, and probably most damning of all, Bullpup's warhead simply proved too small to be effective against hardened targets in North Vietnam. In fact, Bullpup missiles scored several direct hits on the Thanh Hoa Bridge during the initial April 1965 raid. However, to all outward appearances, the detonating missiles effectively bounced off this reinforced structure, leaving it unscathed.[20]

Clearly lagging the Navy in precision guidance capability at the onset of Vietnam, the Air Force adopted two other important air-to-ground munitions from its sister service before finally fielding the "homegrown" technology of laser guidance. Developed by the Naval Weapons Center and Texas Instruments, the AGM-45 Shrike anti-radiation missile discussed previously was already in production by 1963. And, although initial experience with Shrike in Vietnam was disappointing, it eventually became the backbone of the Air Force's acclaimed Wild Weasel counter surface-to-air missile system, and prefigured a variety of specialized anti-radiation missiles in the coming decades.[21] However, in appearance, guidance mode, and payload—a meager fifty-one pound warhead that peppered its target with small steel balls or white phosphorus—Shrike actually resembled the air-to-air missiles of the day, and contributed only indirectly to resolution of the ongoing tactical bombing challenge. Thus, although commonly thought of as precision guided munitions, and certainly included in the Air Force's 1970 survey

---

[19]HQ PACAF, "Second Generation Weaponry," 18.

[20]Spires, "Guiding Light," 68.

[21]Pretty and Archer, *Jane's Weapon Systems 1973-74*, 130; see also Barker, "The SA-2 and Wild Weasel," 116-17.

of second generation weaponry, anti-radiation missiles such as Shrike and its greatly improved and larger counterpart, the AGM-78 Standard Anti-Radiation Missile, remain beyond the focus of this study.[22]

In addition to rocket-propelled Bullpup and Shrike missiles, the Navy developed—and the Air Force borrowed—the first freefalling "smart bomb" to be operationally employed in Southeast Asia. Designed at the Naval Weapons Center at China Lake, California, from 1963 to 1965, the AGM-62 Walleye was subsequently produced by Martin-Orlando and used by the Air Force in North Vietnam beginning August 24, 1967. Walleye represented a radical shift from the earlier generation of radio-controlled munitions, Tarzon and Bullpup included, legitimizing its classification by the Air Force as a "second generation" weapon.[23] Uncharacteristic of existing precision weapons in both appearance and technical design, its most innovative feature was clearly the use of an electro-optical television guidance system, which allowed the bomb to acquire and autonomously home in on a target. In order to accomplish this, Walleye contained a small, gyro-stabilized TV camera in its nose. Before release, the pilot or weapon systems officer simply aligned the camera with the target and obtained a "lock" using a small CRT monitor. Once released, signals from the TV head produced the requisite control surface movements to direct the bomb to the target, thus freeing the pilot to "take evasive action, a significant 'plus' in an AAA, SAM, or MIG area."[24] Just over ten feet in length, Walleye was comparable to the Bullpup A in size. However, given its extra inch of

---

[22]HQ PACAF, "Second Generation Weaponry," 2; Pretty and Archer, *Jane's Weapon Systems 1973-74*, 135-36—Standard ARM was developed by General Dynamics Pomona Division and fielded in 1968.

[23]HQ PACAF, "Second Generation Weaponry," 3-4.

[24]Ibid., 4, 17; this capability was dubbed "launch and leave" at the time, but it has since been popularized as "fire and forget." The three acronyms refer to anti-aircraft artillery, surface-to-air missiles, and Soviet-built Mikoyan-Gurevich fighter aircraft.

diameter, and absent the need for rocket propellant, Walleye packed almost four times the punch with its 850-pound warhead.

A number of other innovative design features also made the Walleye a significantly more effective weapon than earlier attempts at precision guidance. Its four elongated wing-fins, similar in appearance to the tail fins of a model rocket, produced a lengthened trajectory that allowed weapon release five to six miles from the target, providing a degree of standoff capability. In addition, its warhead consisted of an eight-point linear shaped charge, which produced a radial cutting action caused by extremely high velocity jets of molten metal, followed by a blast effect. When used against hard and semi-hard targets such as railroad and highway bridges, often this jet cutting action weakened structures sufficiently to cause collapse under their own weight.[25] Finally, to alleviate the complication of either aircraft-supplied power or high-endurance batteries, Walleye was fitted with a small constant-speed propeller at its extreme aft end. In flight, both before and after release, the associated Prestolite ram air turbine was used to drive a solid-state alternator, generating the electrical power for all circuitry including the television and control subsystems.[26]

In July 1967, the Air Force deployed six modified F-4 aircraft to Ubon Air Base, Thailand, for combat evaluation of the Walleye weapon system. The first two sorties, flown August 24 and 30, produced spectacular results. On the first mission, two Walleyes were targeted against a concrete pier at the Quang Khe ferry crossing in North Vietnam. Dropped from a distance of five miles, both bombs hit in virtually the same spot, severing the structure and sinking a large adjacent barge. The very next week, a

[25]Ibid., 3-4; Pretty and Archer, *Jane's Weapon Systems 1973-74*, 129.
[26]Ibid.

flight of four F-4s attacked the 380-foot, four-span steel and concrete highway bridge at Long Khap. The two lead aircraft launched one Walleye each from a distance of four miles—the first struck the center span, dropping three spans of the bridge, while the second overshot by approximately 100 feet. With the objective accomplished, the remaining two aircraft returned to Ubon with their ordnance. A third Walleye mission on September 17 reaffirmed the accuracy and effectiveness of this weapon as simultaneous launches from approximately six miles out dropped the center span of the 620-foot That Khe Highway Bridge into the Song Ky Cung River.[27] Encouraged by these initial results, the Air Force intensified its use of Walleye, dropping a total of twenty-two weapons against a variety of targets before halting the program for assessment in early November.

However, initial strikes in August and September had been in relatively low-threat areas, against targets hand-picked for good contrast and light defenses, during periods of excellent weather. Beginning in October, Walleyes were used against targets of higher priority, requiring strikes into more heavily defended areas against targets "not selected primarily for sharp contrast but for tactical importance."[28] So, while the 1967 combat evaluation concluded that "when all went favorably the Walleye/F-4 combination was a devastatingly effective weapon system" achieving "pinpoint accuracy well within the stated 15-foot CEP," it also noted that, beginning with the more challenging missions in October "a few of the deficiencies (and eccentricities) of the AGM-62 appeared."[29] One clear drawback was the requirement for sharp target contrast. Thus, while virtually all missions were flown during the late morning or early afternoon, when sun angles were

[27]HQ PACAF, "Second Generation Weaponry," 4-5.
[28]Ibid., 6, 12.
[29]Ibid., 8, 11-13.

favorable for sharp shadows and good contrast, inherently poor contrast between the target and its background routinely prevented weapon lock or induced inadvertent lock on an adjacent feature. These later missions also demonstrated that "weather and flak made target acquisition difficult, lock shifts occurred in the weapon, and in one case, there was a tumbling missile."[30] Furthermore, Air Force evaluators feared that the enemy might exploit the inherent weaknesses of Walleye's TV guidance system, susceptible to the same factors that hinder human vision, by using camouflage, smokescreens, dust, or high-contrast decoy targets. Thus, initial experience with Walleye was mixed, the fact that twenty-two bombs destroyed fourteen targets without loss of aircraft being offset by a "late rash of unsatisfactory launches and attempts to launch."[31]

The resumption of Walleye operations on January 18, 1968, was a clear indication Air Force leaders believed this weapon's pluses outweighed its minuses. Unfortunately, this particular mission, against one of North Vietnam's most strongly defended targets, the Bac Giang Thermal Power Plant twenty-five miles northeast of Hanoi, did little to vindicate their confidence. Despite the presence of twelve escorting Wild Weasel, flak suppression, and combat air patrol aircraft in the attacking force, two of the four Walleye planes were shot down in the target area. And, although all four successfully launched their weapons, subsequent photoreconnaissance revealed a facility that appeared to be intact and operational.[32] In spite of this setback, the 435th Tactical Fighter Squadron at Ubon continued to use Walleye for the duration of the war. Even with its known

[30]Ibid., 8-10, 12; because Walleye's guidance function involved discriminating between light-dark contrast around the aim point at lock-on, it could also be "fooled" by too much symmetry—on bridges with identically configured trusses, the guidance system apparently selected one section after another, often running to the shoreline without finding any one "best" lock.

[31]Ibid., 11-12.

[32]Ibid., 15-16.

limitations, Walleye's long standoff range and "launch and leave" capability made it the ideal weapon for use against caves, uncamouflaged bridges, and other high contrast targets, and showed even greater promise for the future. In 1968, the Navy began work on an improved version, Walleye II, which entered production in 1971.[33] In addition to its larger, 2,000-pound warhead, this variant incorporated technological improvements to the guidance and display systems, producing a much more capable weapon.

The Air Force opted not to purchase Walleye II and, in fact, restricted its use of Walleye in Southeast Asia to approximately four missions per month after 1968. This policy was hardly an indication of waning commitment to precision guidance as the remedy for air power deficiencies in Vietnam; rather, it reflected at least three significant developments of the day. In a dramatic speech on March 31, 1968, following the ambiguous results of the Tet Offensive, President Lyndon Johnson announced a halt to all bombing north of the 19th parallel. Over the next four years, American bombing was limited to South Vietnam, the Laotian and Cambodian frontiers, and the area of North Vietnam just north of the demilitarized zone, virtually eliminating large, hardened targets suitable for Walleye attack. A second explanation for Walleye's restricted usage was its high cost. At approximately $35,000 per copy, the Air Force used this weapon judiciously, reserving it primarily for valuable, high-contrast targets that defied conventional attack.[34] Finally, while Navy-designed munitions (and aircraft) proved a convenient stopgap at the onset of the Vietnam War, by 1968 the Air Force had commissioned a number of precision projects of its own, developed with service-specific

[33]Ibid., 16-17; Pretty and Archer, *Jane's Weapon Systems 1973-74*, 129.

[34]Robert A. Doughty and Ira D. Gruber, *Warfare in the Western World* (Lexington, Mass.: D.C. Heath and Company, 1996), 925; typical Walleye missions following the bombing halt included the caves of northeast Laos, used extensively by the North Vietnamese Army and Pathet Lao.

mission requirements in mind, under the control of its own program managers. Of course, such an approach had been tried before, without producing satisfactory results. However, a number of significant technological bottlenecks had clearly been broken during the early 1960s. As a result, the Air Force undertaking pursued during the Vietnam War produced weapons of unprecedented accuracy and reliability, establishing the family of precision guided munitions at the heart of America's arsenal today.

Paving the Way

As demonstrated in the previous chapter, by the close of 1966 the most promising precision technology on the horizon was clearly semiactive laser guidance. However, very few individuals within the Air Force actually knew of its existence and fewer still advocated its further development. Texas Instruments engineers who participated in the creation of the first laser guided bomb have pointed out that it was an anomaly, developed outside the formal Air Force acquisition system.[35] The challenge for Colonel Joe Davis, following successful initial flight testing in January 1967, was to move it into the mainstream of the weapons research and development establishment. Securing the backing of Major General Andy Evans at the Pentagon had been a vital first step, but anyone familiar with government bureaucracy will appreciate the difficulty involved in pushing this initiative through entrenched, often recalcitrant, agencies. Presented with the results of the two company's initial efforts, the Limited War Office in Ohio made the preposterous decision to have Texas Instruments stand down for a year or more to allow North American Autonetics an opportunity to catch up, followed by another head-to-head competition. However, convinced that the Texas Instruments weapon was vastly superior

[35]Weldon Word, interview by author, 19 March 2001, Tyler, Tex., Personal Files of author, 6.

to both the competing Autonetics design and the Navy's electro-optical technologies, and unwilling to waste precious time with a major bombing campaign in full swing in Vietnam, Colonel Davis did what can only be described as an "end run" around the acquisition bureaucracy.

Within days of testing their tenth and final laser guided bomb at Eglin AFB, in January 1967, Weldon Word and his Texas Instruments team were told that Colonel Davis planned to hold a "demonstration" in Dayton, Ohio, where they would present the results of their initial contract, detailing what had been accomplished and what had been learned in the process. In actuality, the colonel was staging a coup. Rather than appealing to the Limited War Office, which had funded the initial $99,000 contract, he took the unorthodox step of calling a "generals board" to decide the weapon's future. As Word entered the conference room to make his presentation, he was met by eight operational commanders from around the world—all of them high-ranking generals. Also in attendance, and a good indicator of both the new weapon's potential and Colonel Davis's influence, was recently retired Air Force Chief of Staff, General Curtis LeMay.[36] Having already received a very strong recommendation from General Evans's Pentagon office, the generals listened to the TI presentation for about twenty minutes and then simply asked "will it work?" After assuring them it would, Word's team was dismissed. In order to avoid legal entanglements, the Autonetics team was also invited to present their results to the same board. Not surprisingly, this ad hoc board endorsed further development of the Texas Instruments design, and sent a memo to that effect to the chief

[36]Word, 2001 Interview, 7; in a vivid account of the incident, Word described his first encounter with the illustrious General LeMay, who appeared quite relaxed smoking a cigar, with his cowboy boot-clad feet propped up on the conference table.

of staff, over signatures equating to approximately thirty stars. Needless to say, things began to move very quickly following this event.[37]

Of course, such political maneuvering took place very much in the background. The official record simply shows that in January 1967, Seventh Air Force Headquarters in South Vietnam submitted Southeast Asia Operational Requirement #100, establishing terminal-guided munitions as a critical wartime need, and that based on this requirement, U.S. Air Force Headquarters established Project 3169 as a formal engineering development program that same month.[38] However, this project was unmistakably a direct extension of the earlier Texas Instruments work. By March a new contract had been negotiated with Texas Instruments, calling specifically for redesign of the original M-117 bomb guidance kit, with the following objectives: (1) incorporating military specifications of ruggedness, (2) rendering it more producible, and (3) fabricating fifty functioning guidance kits, designated KMU-342/B, for technical and operational evaluation.[39] In essence, this program was intended to provide a baseline for TI guidance kit production on a large scale. As with the initial development phase, it too followed a very aggressive timeline, producing a weapon ready for flight tests in Florida seven months later, and for live combat evaluation in Vietnam in little more than a year.

In order to more efficiently manage this project and adhere to such a compressed development cycle, the Air Force made several noteworthy organizational changes early in the program. For example, technical direction of the program was assigned from the outset to the Air Force Armament Laboratory at Eglin AFB, while management oversight

---

[37]Ibid.

[38]U.S. Air Force Systems Command, "Development and Flight Test Evaluation of the M-117 Laser Guided Bomb," December 1969, DTIC AD Number 518403, ii, 2.

[39]Ibid., 3.

was transferred in August 1967 from the Limited War Office to the newly established Guided Bomb Program Office in Dayton, Ohio. Combined engineering and operational flight-testing of the improved laser guided M-117 bomb was begun three months later, overseen by a newly created Air Force interagency organization called the Pave Way Task Force.[40] Realizing that the success of the overall project hinged equally on the development of an effective laser subsystem to illuminate targets in a tactical environment, these same organizations negotiated and managed a parallel contract for redesign of this critical component. Once again enlisted for its pioneering expertise in the field, Martin-Orlando was able to convert their rudimentary laser illuminator into a more rugged, versatile device able to designate targets from the ground, from a slow-moving forward air controller aircraft, or from the rear cockpit of an F-4 fighter aircraft, accurately aiming and projecting its narrow beam of invisible, infrared light over distances in excess of five miles.[41]

While the laser illuminator was successfully tested from a variety of ground and airborne platforms, with slightly better results from the stationary ground stations, combat considerations quickly convinced program managers of the desirability of using a two-seat fighter for illuminating targets. As an interim solution, Eglin's Armament

---

[40]Ibid., ii, 2; the nomenclature of precision guided munitions can be confusing and even intimidating to the uninitiated—the term Paveway, spelled originally as two words, began as an all-encompassing name for the diverse family of guided weapons procured jointly by Air Force Systems Command and Tactical Air Command during Vietnam. Initially Pave Way I designated the Texas Instruments laser guided bomb program, while Pave Way II and Pave Way III referred to parallel electro-optical and infrared guidance projects respectively. Post-Vietnam, Paveway I has come to designate the first generation of laser guided munitions created by Texas Instruments, while Paveway II and Paveway III refer to upgraded versions of these munitions eventually produced by the same company. In addition, the earliest laser guided bombs were given the nickname Bolt, but later each configuration received a specific GBU designation as *G*uided *B*omb *U*nits. Thus, for example, different documents refer to a laser guided M-118 3,000-pound bomb variously as Paveway M-118, Bolt-118, or GBU-11. In order to avoid confusion, this chapter will use the Paveway designation common to the Vietnam era, while subsequent chapters will make use of the GBU and AGM nomenclature in common usage today.

[41]Systems Command, "Development and Flight Test," iii.

Development and Test Center fabricated an unstabilized beam steering device to be mounted on the left cockpit canopy rail beside the rear crewmember, allowing targets to be designated directly through the canopy of an F-4 aircraft (Figure 13).[42] Obviously this solution imposed severe restrictions on the illuminating aircraft, which had to remain in a gentle left turn throughout weapon delivery to keep the target within view of this left-facing apparatus with tracking limits of sixty degrees in azimuth and elevation. It took several more years to field a stabilized illuminator, mounted beneath the wings of a fighter aircraft, but in the meantime, tactics were developed to use this early version immediately in Vietnam.[43]

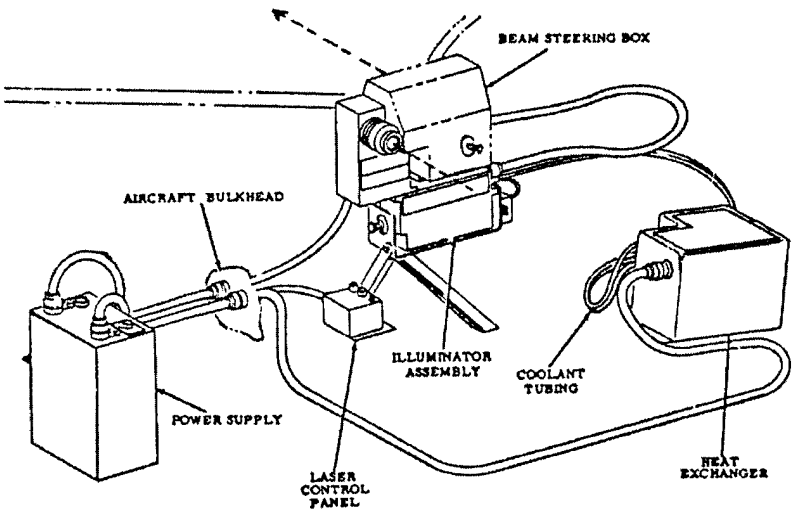

FIGURE 13
F-4 Cockpit Laser Illuminator

Surprisingly, despite starting with a functioning design, and making numerous improvements in the eight months available, the first operational tests of Paveway M-117

[42]Ibid., 73-74.
[43]Headquarters 7th Air Force, "Pave Way Utility and Cost Effectiveness in Southeast Asia," 15 September 1968, AFHSO, Bolling AFB, D.C., file number K7725-506, 7-9.

laser guided bombs, beginning in November 1967, did not produce spectacular results. Two of the first four bombs fell completely unguided because of battery problems, and the remaining two missed their targets by over 100 feet.[44] However, as the engineers and operators involved made minor modifications to their equipment and delivery procedures over the next five months, it became obvious that consistent, precision bombing had at last become a real possibility. In April 1968, just prior to deploying the weapon to Southeast Asia for combat evaluation, Air Force fighters dropped eight weapons against realistic tactical targets using live warheads. The results were impressive, with all targets destroyed beyond economical repair, and a circular error probable of just forty feet.[45] At the conclusion of this development program, Air Force acquisition managers announced that "the capability...to vastly improve bombing impact accuracy was emphatically demonstrated," and they concluded the new weapon would dramatically reduce sortie requirements, aircraft attrition, aircrew losses, and operational and logistic costs.[46]

There is, however, a marked difference between optimized test conditions and the chaos of live combat. In fact, when the 8th Tactical Fighter Wing at Ubon, Thailand, tested the laser-guided M-117 bomb against actual enemy targets in North Vietnam from May to August 1968, the results differed significantly from the stateside tests, with numerous undestroyed targets and a circular error probable of seventy-five feet.[47] Fortunately, weaknesses in the bomb's design had been identified early in the program, and recommendations for improvement resulted in the simultaneous development of a second Paveway weapon, the laser-guided Mark 84. Although minor modifications were

[44]Systems Command, "Development and Flight Test," 48.
[45]Ibid., 44.
[46]Ibid., 3, 70.
[47]HQ 7th Air Force, "Pave Way Utility," 29.

made to improve its seeker, two obvious differences in external design accounted for most of the Mark 84's improved performance. First, while both were general purpose bombs, the M-117 was a remnant of World War II, with the stereotypical ogival nose and consequent bulbous appearance typical of that era. In contrast, the Mark 84 was designed in the 1950s as part of the Mark 80 low-drag bomb series. Not only did improved aerodynamics lead to fewer anomalous drops, but its thicker skin and heavier, 2,000-pound, payload made it much more effective for cratering and penetration. Secondly, and of far greater significance, the KMU-351/B guidance kit Texas Instruments designed for the Mark 84 used forward-mounted canards for control rather than tail fins, which

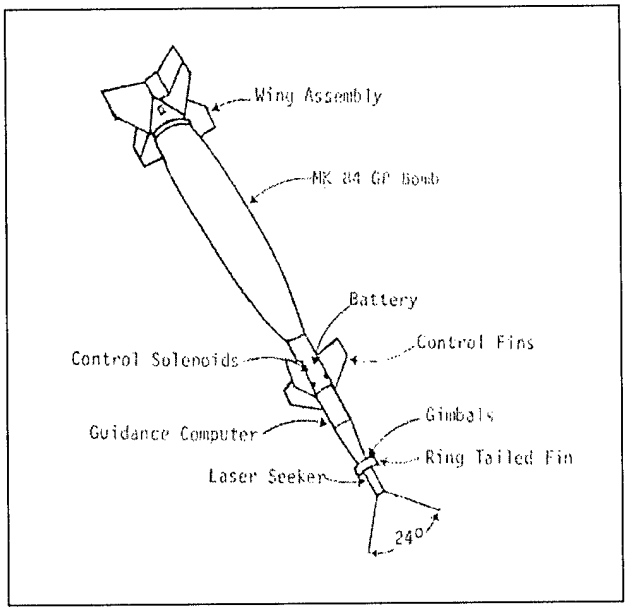

FIGURE 14
Mark 84 Laser Guided Bomb

permitted mounting of the entire guidance assembly as a single unit on the nose of the weapon, thus eliminating the troublesome conduit running the length of the M-117, simplifying weapon assembly, and improving in-flight control markedly (Figure 14).[48]

[48]Systems Command, "Development and Flight Test," 71.

Although development of the precision guided Mark 84 lagged the original M-117 by several months, they were tested concurrently in Southeast Asia in July and August of 1968, by the same flying unit. In contrast to the M-117 results already noted, Paveway Mark 84 recorded an unprecedented CEP of just twenty feet, with fully one in every four bombs scoring direct hits.[49]

Given these phenomenal results, one might expect to see the wholesale adoption of laser guided bombs by all aviation branches of the U.S. military that very year. Yet, for the next four years they were used only nominally in Vietnam, and received little publicity, primarily because the March 1968 bombing halt in the North severely limited the suitable targets available. This does not imply, however, that the state of precision bombardment remained stagnant. The formal combat test and evaluation of Paveway I, terminated at Ubon on August 8, 1968, determined that "the system was operationally suitable and effective for use in Laos and in North Vietnam's [southernmost] Route Package I combat environments," with the caveat that the "M-117 Pave Way program be discontinued when the stock of available kits was expended" in favor of the more effective Mark 84.[50] During this phase of the war, the primary objective of the bombing campaign became the interdiction of war materiel flowing south down the "Ho Chi Minh Trail." Although most of this traffic moved only at night, daylight Paveway bombing proved an effective means of stemming the flow by destroying bulldozers, parked trucks, bunkers, caves, ammunition dumps, and antiaircraft gun emplacements, and by cutting roads at hard-to-fix points just before nightfall.[51] Thus, the period from 1968 to 1972

[49]HQ 7th Air Force, "Pave Way Utility," 18-19.
[50]HQ PACAF, "Second Generation Weaponry," 21-22.
[51]Electronic mail to the author from Dean Failor, Lt. Col. USAF Retired, dated 24 November 2001.

was formative for laser guided bombs, seeing them successfully used against a variety of targets, incorporated into doctrine, upgraded, and stockpiled for future contingencies.

During this same period, the Air Force fielded an electro-optically guided bomb of its own to replace the Navy Walleye. Deployed to Ubon, Thailand, in January 1969, this Pave Way II program was intended to provide a precise, "launch and leave" capability by mating KMU-353/B guidance kits to general purpose Mark 84 bombs, for use by existing Walleye-compatible aircraft.[52] Nicknamed Hobo, for *ho*ming *bo*mb, this new TV-guided "smart bomb" was produced by Rockwell—formerly North American Autonetics—and proved more capable, more accurate, and less costly than Walleye in subsequent combat evaluation. In fact, of the first twenty-two weapons tested, eighty percent guided successfully, half of these scored direct hits, and only six missed their target by more than ten feet.[53] Clearly, here was a technological capability with enormous promise. In fact, by the close of the Vietnam War electro-optical guidance was being exploited in the AGM-65 Maverick antitank missile, and planned future enhancements included a two-way data link between aircraft and bomb to allow in-flight course adjustment.[54] Thus, Walleye and Hobo ushered in an important precision bombing capability, which would eventually prove to be a mainstay of America's air power arsenal. However, as they existed in Southeast Asia, electro-optically guided bombs were still four to five times as costly as Paveway I, and not applicable to nearly as many targeting situations, so that by mid-1970 a scant twenty-five Hobo guidance kits were maintained at Ubon to be used

[52]HQ PACAF, "Second Generation Weaponry," 50.
[53]Ibid., 53.
[54]Pretty and Archer, *Jane's Weapon Systems 1973-74*, 131-32.

"for contingency operations, should they become necessary, against bridges, power plants, and other lucrative high contrast targets."[55]

In sharp contrast, Paveway I laser guided bombs seemed to find more and more applicability in Vietnam as both the weapon's price and CEP diminished. In terms of cost, Texas Instruments went from "handmade" prototypes at $10,000 apiece in 1966, to a production-phase Paveway guidance kit that sold in the neighborhood of $3,000 by 1972. While aircrews indicated they still felt like "we were dropping a Cadillac when we pickled one off," perhaps a better analogy would be that of the Ford Model T, for clearly here was finally a precision guided weapon with a price tag palatable enough to use against common, everyday targets.[56] As this weapon entered the production phase, and crews consequently gained more proficiency, Paveway's circular error probable shrank to a figure undreamed of in previous weapons. As one Air Force report put it: "the Mark 84 Pave Way had been designed for a 40-foot CEP and most people would have been more than happy with any figure less than that. Yet from the beginning of operational use of the production model...CEPs diminished to zero."[57] Anecdotal evidence during the years of the bombing halt supports claims of such extraordinary accuracy. In keeping with the truism "when you have a new hammer, everything looks like a nail," and denied more appropriate targets in the North, aircrews and planners began to improvise and found Paveway effective against a wide variety of targets.

---

[55]HQ PACAF, "Second Generation Weaponry," 56.

[56]Pretty and Archer, *Jane's Weapon Systems 1973-74*, 132, for costs; quotation is from Lieutenant Colonel Dean Failor, USAF Retired, who flew combat missions with the 433rd Tactical Fighter Squadron from 1970 to 1971.

[57]HQ PACAF, "Second Generation Weaponry," 30; actual figures in this report show that forty-two Mark 84 laser guided bombs were dropped from December 1968 to January 1969: "26 of the 42 bombs were scored as direct hits, which by definition meant that 'Zero' was the minimum radial distance within which 50 percent or more of the weapons impacted." For the 184 impacts observed on strike film from January to July 1969, the CEP remained at zero.

At one extreme were the large, fixed targets that were envisioned during original testing at Eglin. Paveway's effectiveness against such targets is dramatically illustrated in the following participant recollection of a mission in which:

> We took a bridge out with laser illumination. The first bomb hit the bridge, the second hit the abutment and blew that end of the bridge off, the third bomb hit the middle and dropped that span in the river, and the fourth bomb hit the abutment on the other end and blew that up. When we left there was nothing but ripples in the water.[58]

Of course, few of these lucrative fixed targets existed in the area of continued bombing after 1968, so Paveway weapons were increasingly tried against smaller, more mobile targets. Numerous accounts indicate just how versatile the weapon quickly became, not only in strategic and interdiction missions, but also in the gritty role of close air support for friendly counterinsurgent forces. In fact, no one was more surprised by this proliferation than the weapon's original creators at Texas Instruments, one of whom related the following incident briefed to them by a returning laser guided bomb crew:

> There was a Vietcong sniper that was harassing American troops at a road junction. The F-4s were able to flush him down from a tree and he proceeded to pedal his bicycle down the road. The laser operator continued to track the Vietcong and after the explosion and the dust cleared all that was left was a bent up bicycle on the edge of the crater.[59]

It was undoubtedly at this other extreme, destroying elusive targets for which the laser guided bomb had never been intended, that Paveway most noticeably enhanced its reputation, endearing itself to war planners, aircrews, and ground troops alike.

Several other factors made Paveway laser guided bombs extremely attractive to those fighting the bitter, protracted struggle in Vietnam. The fact that no Paveway aircraft were lost during the early years of implementation was a boon not only for the

---

[58]Failor, 24 November 2001 E-mail.

[59]Electronic mail to the author from Robert Wagner, dated 28 November 2001.

aircrews involved, but also for military and government leaders faced with an increasingly unpopular war. Perhaps contributing even more to Paveway's popularity among warfighters, however, was its unprecedented simplicity. Any aircraft compatible with an unmodified general purpose bomb could drop the laser guided version of the same bomb, since no electrical connection was required between bomb and aircraft. And, in contrast to dive-bombing, the use of laser guidance removed most requirements for accuracy from the delivery pilot. As one early postwar report explained, "the exact laser guided bomb release point in relation to the target is not critical as the bomb needs only to be dropped into an imagined conical shaped drop basket." At the recommended bomb release altitude of 12,000 feet, this basket had a diameter of approximately one mile, making it all but impossible to miss.[60] And, while more exacting requirements were placed upon a separate laser operator, because the weapon now had its own internal seeker, this crewmember was required to control only a single parameter—accurate target tracking. So, while Paveway did not receive an inordinate amount of publicity during the four-year bombing halt, it obviously captivated the imagination of U.S. airmen, resulting in further weapon development and enhancement. By 1971, additional enhancements and follow-on programs had truly made the laser guided bomb the most versatile and effective air weapon yet fielded.

The Linebackers

Although North Vietnam's massive, conventional invasion of the south, the so-called Easter Offensive of 1972, did not come as a complete surprise, its initial intensity did. In

[60]Headquarters 7th Air Force, "An Analysis of Laser Guided Bombs in Southeast Asia," 28 June 1973, AFHSO, Bolling AFB, D.C., file number K7640-245, 5-6.

fact, war plans drawn up by the Joint Chiefs of Staff and Military Assistance Command, Vietnam in February 1972 specifically addressed just such an eventuality, noting that "U.S. military actions to be taken in the event of a major enemy assault across the DMZ will consist primarily of maximum support for Republic of Vietnam Armed Forces with tactical air" and other air and naval assets.[61] Nevertheless, the initial North Vietnamese onslaught succeeded brilliantly—within days, virtually all forward fire support bases had fallen, and within a month South Vietnam's 3rd Infantry Division, the country's front line of defense, had dissolved in the face of unrelenting Northern artillery and tanks.[62] Although the situation appeared critical, President Nixon decided against recommitting U.S. ground troops, opting instead to launch Operation Linebacker. As a result, the relatively few remaining Americans in Southeast Asia were forced to rely heavily on air power, especially the proven technology of precision guided munitions, to prevent the total capitulation of South Vietnam. The results could hardly have been more dramatic.

By official Air Force estimates, bombing halts and restrictions "had reduced targets suitable for guided bomb strikes by 95 percent prior to the commencement of Linebacker operations on May 10, 1972."[63] No doubt because of such reticence, North Vietnamese leaders made at least four critically flawed assumptions in launching this invasion. First, as they had during the earlier Tet Offensive, they underestimated the vulnerability of massed conventional forces to air power, where the tactical air weapon is most efficient. Secondly, they evidently did not believe that air power assets, previously removed from the combat arena, could return and respond so rapidly. In addition, they apparently did

[61]HQ PACAF, "Linebacker: First 120 Days," 12.
[62]Ibid., 8-9.
[63]Headquarters Pacific Air Forces, "Linebacker Operations, Sept.–Dec. 1972," 31 December 1978, AFHSO, Bolling AFB, D.C., file number CHECO-K717.0413-218, 37.

not expect President Nixon, particularly in an election year, to escalate the war by resuming bombing over North Vietnam, imposing a naval blockade, and mining North Vietnam's harbors. And, finally, the enemy obviously overlooked the capabilities of laser guided bombs against targets in the heartland of North Vietnam, and the impact this weapon would have on the relaxation of rules of engagement.[64] By 1972, Paveway guidance kits were rolling off the Texas Instruments assembly line at a rate in excess of 2,000 per month, giving the U.S. an important capability it did not possess during the earlier Rolling Thunder campaign.[65]

As a result, during the first Linebacker air campaign American aircrews succeeded in destroying numerous high-value targets, such as Hanoi's Paul Doumer Bridge (Figure 15)

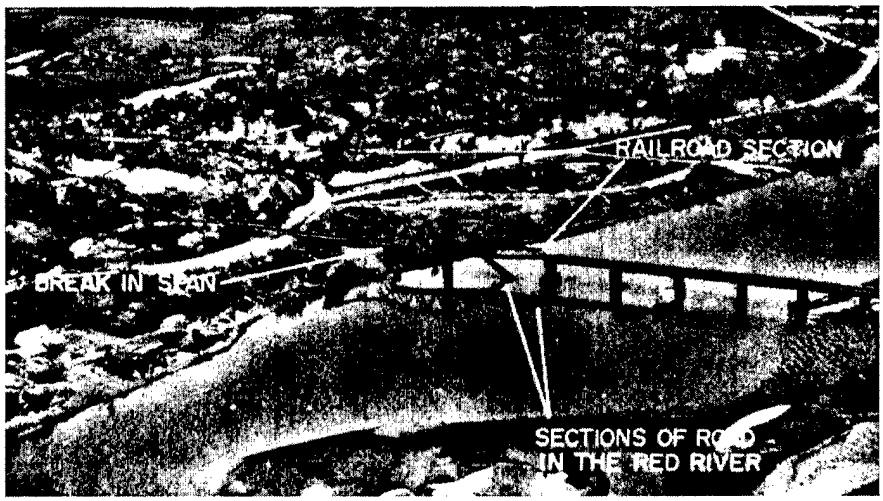

FIGURE 15
Paul Doumer Bridge following May 10, 1972 Air Strikes

and Bac Mai underground command and control center, that had previously either been off-limits because of the political risks associated with inaccurate conventional bombing, or had proven impervious to repeated attack. Perhaps most telling of all, on May 13,

[64]HQ PACAF, "Linebacker: First 120 Days," 9.

[65]Steve Roemerman, "The History of Guided Missiles at Texas Instruments," *TI Technical Journal*, July-August 1995, 69.

1972, twelve F-4s armed with laser guided bombs attacked the infamous Thanh Hoa Bridge—the same bridge that had vexed Colonel Davis and Weldon Word seven years earlier. Often called "the toughest interdiction target of them all," this 540-foot concrete and steel truss structure built by the French during the colonial period had frustrated American airmen since it was first attacked during Rolling Thunder on April 3, 1965. However, armed with fifteen Mark 84 and nine M-118 laser guided bombs, these three flights of aircraft rendered Thanh Hoa completely unusable, accomplishing in a single mission what seven years of non-precision bombing had failed to do (Figure 16).[66]

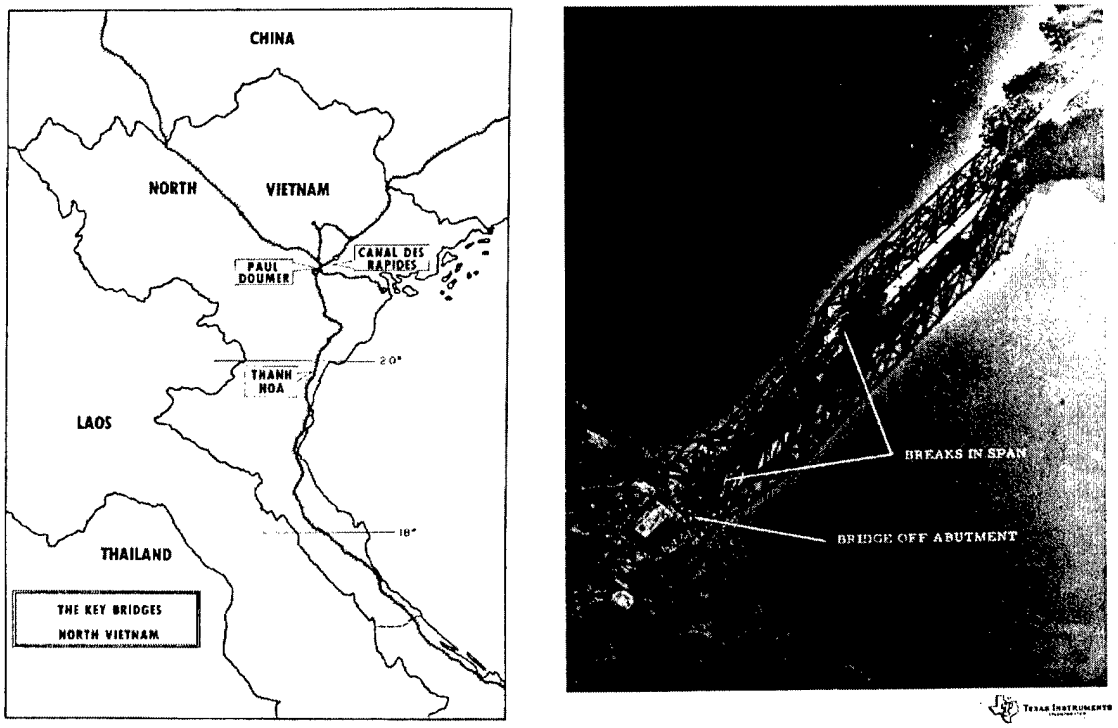

FIGURE 16
Location of Key Bridges (left) and Battle Damaged Thanh Hoa Bridge (right)

Several airborne lasing systems were available in Southeast Asia during the final year of the Vietnam War, adding considerably to the flexibility enjoyed by planners and

[66]HQ PACAF, "Linebacker: First 120 Days," 22-24, 62-63; from 1965 to 1972, the Thanh Hoa Bridge survived 700 combat sorties, during which 12,500 tons of bombs were dropped and 29 aircraft lost.

aircrews during the Linebacker operations. The most widely used designator remained the canopy-mounted F-4 configuration, sometimes referred to as "White Lightning" or "Zot."[67] Illustrative of the accuracy and reliability of this system is the following account of a Linebacker mission against an oil storage facility near Vinh:

> There were eleven [storage tanks] arrayed in an X pattern—sets of three that were attached by a crisscross of pipelines. We had two 2,000 pound bombs on each aircraft with six aircraft dropping weapons. We had 12 bombs and 11 targets and we got all of them, and we had one bomb left. I was illuminating for the other aircraft, and I was trying to decide where to drop this last bomb—because we didn't want to take it back with us...I picked a little pumping station where all the pipes led into this one area and blew that up. Twelve targets, 12 bombs and then 12 holes in the ground. It was done in less than five minutes.[68]

A number of technologically sophisticated enhancements made laser bomb toting aircraft more survivable in high-threat environments by 1972. For example, Pave Knife, and its improved follow-on version Pave Spike, consisted of a laser designating pod carried beneath the strike aircraft. By allowing self-designation, such systems reduced both the number of aircraft required for a given mission, and their vulnerability to enemy defenses.[69] Another system, Pave Sword, slaved the designator to an infrared targeting television aboard an AC-130 gunship, allowing night operations. This innovation robbed the enemy of its nighttime sanctuary while simultaneously exploiting the cover of darkness. Finally, for concealed or mobile targets, Pave Penny placed the designator with a forward air controller in a propeller-driven OV-10 aircraft.[70] The net result of such precision capability was two-fold: an inordinate amount of damage could be inflicted by a relatively few aircraft, and a host of previously off-limit targets became viable.

---

[67]HQ 7th Air Force, "Analysis of Laser Guided Bombs in SEA," 5.
[68]Failor, 24 November 2001 E-mail.
[69]HQ 7th Air Force, "Analysis of Laser Guided Bombs in SEA," 5.
[70]Failor, 24 November 2001 E-mail.

It would be difficult to overestimate the impact precision guided munitions had on U.S. military strategy in 1972. The previous restrictive rules of engagement were dramatically relaxed as military and government officials realized that, for the first time ever, they could apply decisive military force at key points, without the high costs and political risks that had traditionally accompanied such air strikes. In a series of press conferences throughout June and July 1972, President Nixon repeatedly emphasized that the new bombing campaign in Vietnam was targeting only military targets in order to avoid civilian casualties. He specifically stated that dams, irrigation dikes, and populated areas were being strictly avoided, because such strikes "might shorten the war, but would leave a legacy of hatred throughout that part of the world from which we might never recover."[71] In fact, the U.S. military was avoiding civilian casualties, or "collateral damage" as it is often euphemistically called, just as it had during the earlier Rolling Thunder campaign. The difference in Linebacker, however, was that proximity to a sensitive area no longer precluded aerial bombardment.

Fighting a limited war at the height of the Cold War, the U.S. military prior to 1972 had been forced to avoid North Vietnam's most important strategic targets. Although in possession of a vast nuclear arsenal, ironically precision technology allowed 500- and 2,000-pound conventional bombs to achieve what megaton yields could not. Perhaps the most graphic example of the effect of precision guided munitions on military strategy was the June 10, 1972 air strike against the Lang Chi hydroelectric power plant. Located approximately sixty miles northwest of Hanoi in the Red River Valley, this power producing facility was the largest in North Vietnam, capable of providing seventy-five

[71]U.S. President, *Public Papers of the Presidents of the United States* (Washington, D.C.: Government Printing Office, 1975), Richard Nixon, 1972, 1183.

percent of the country's electrical power. And yet, because of its proximity to a major dam, Lang Chi had always been off-limits. However, in a single mission, F-4s of the 8th Tactical Fighter Wing, dropping laser guided bombs, completely destroyed the turbines and generators in the main building and obliterated the transformer yard, without breaching the adjacent dam and spillway (Figure 17).[72] Thus, as America emerged from

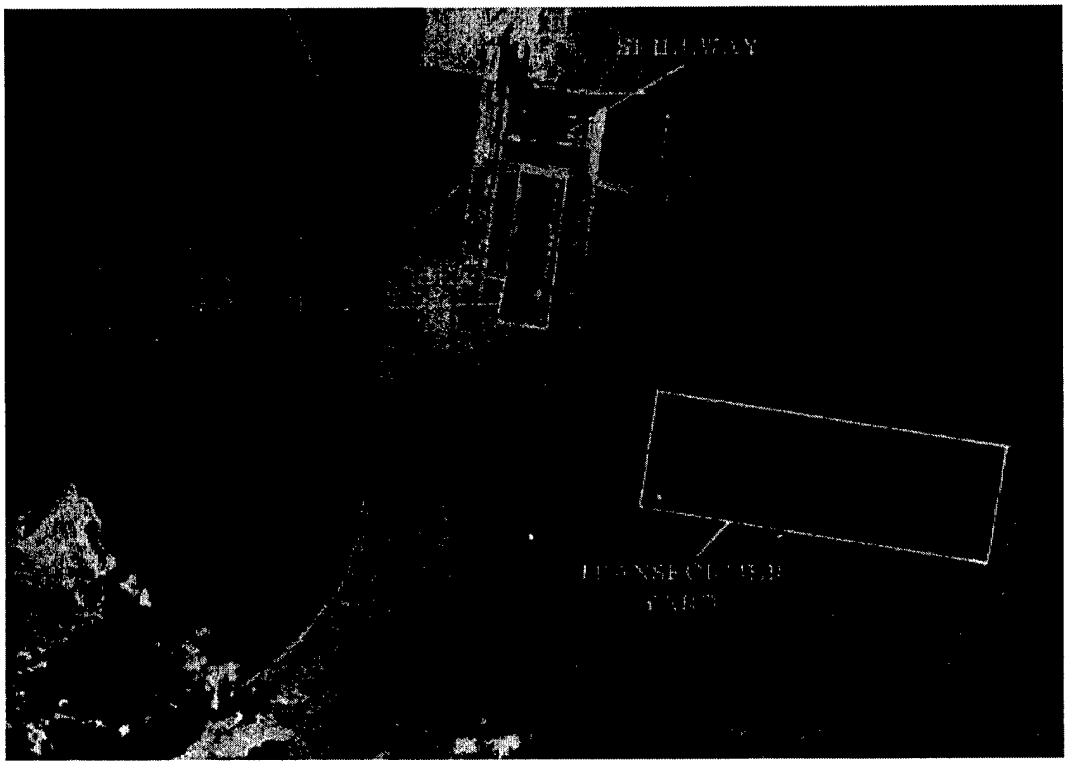

FIGURE 17
Lang Chi Reservoir and Hydroelectric Facility, Post-Strike

the Vietnam conflict, military and government officials were convinced that "surgical" air strikes were not only possible, but were, in fact, routine. The following statement from the Air Force Secretary's June 1972 "Policy Letter for Commanders" typifies the official reaction to this newly demonstrated capability:

[72]HQ PACAF, "Linebacker: First 120 Days," 37-38; also Failor, 24 November 2001 E-mail—a member of the 8th TFW at the time, Dean Failor recalled that Pave Knife was used on this particular mission, preserving a video record of the strike: "He dropped the bomb, hit the generators, and panned over to the dam to show it was still standing. This was done to prove to the world we didn't drop that dam."

> New weapons and tactics resulting from the accelerated air war have significance not only in this war but in evaluations of strategy to be used elsewhere in the future. The unprecedented accuracy of laser-guided or TV-guided 'smart' bombs and airborne sensors now being used by U.S. aircraft is making interdiction far more effective than before.[73]

Operations Linebacker and Linebacker II in 1972 have often been cited as successful air campaigns that decided the outcome of a larger conflict. In the case of the first Linebacker, obviously the U.S. bombing and blockade severely restricted the flow of vast quantities of fuel, ammunition, and supplies required by North Vietnam's conventional military tactics. Backed by overwhelming American air power, the South Vietnamese military quickly stabilized its lines in front of Saigon and Hue, and even managed to mount a counteroffensive. Air service commanders, including Pacific Air Forces' General Lucius D. Clay Jr., were quick to point out the critical role air power, and specifically precision weapons, played in blunting this potentially disastrous offensive, concluding:

> Initially, they overwhelmed the allied defenses. The great unsung story of this invasion is the speed with which tactical air was able to respond. I don't think anybody can deny that the reason why the invasion was checked and the counteroffensive became possible is airpower, in the form of the B-52s, tactical air, the gunships, and the guided bombs.[74]

North Vietnam suffered heavier losses than South Vietnam in the military campaigns of 1972, and by July of that year both sides found compelling reasons to compromise. In fact, a peace settlement prior to the U.S. presidential election appeared feasible. However, following six months of tortuous negotiations, it was only after yet another massive American bombing campaign—Operation Linebacker II, the so-called Christmas

---

[73]Office of the Secretary of the Air Force, "Air Force Policy Letter for Commanders," 1 June 1972, AFHSO, Bolling AFB, D.C., Policy Letter file, 2.

[74]Edgar Ulsamer, "Interview with General Clay," *Air Force Magazine*, September 1972, 5.

bombing—that the Paris peace agreements of January 1973 were finally signed. Clearly, precision bombing in 1972 had at least a threefold effect: it literally made new choices possible for U.S. leaders, allowing them to increase military pressure on North Vietnam without escalating U.S. involvement; it thwarted the North's military offensive and brought its representatives back to the bargaining table; and it reassured America's uneasy allies in the South, convincing them with the promise of additional air strikes that their future following a negotiated peace settlement would remain secure.[75]

In the aftermath of the Linebacker air campaigns one thing was obvious—precision guided munitions had literally come of age during the war. In 1965, clearly lacking any substantial precision capability, fighter-bombers had been reduced to dropping ordnance that reflected little improvement over World War II weaponry.[76] By 1972, the U.S. possessed not only a proven capability for accurate aerial bombing, but an entire new family of weapons—standard, existing inventory munitions constituting the most effective air-to-ground arsenal ever assembled. As discussed previously, U.S. airmen faced a formidable challenge in Southeast Asia, in essence fighting two very different and highly specialized air wars: one in support of friendly forces in South Vietnam, and the other an interdiction campaign in North Vietnam, Laos, and Cambodia. Early attempts to adapt air power to such diverse mission requirements resulted in a sweeping array of technological wizardry, and resultant operations and logistics of almost untenable complexity. Alluding once again to Thomas Kuhn's model, the practitioners of "normal"

---

[75]Doughty and Gruber, *Warfare in the Western World*, 932; as it turned out, in 1975 President Gerald Ford lacked the political will—in the aftermath of Watergate—to deliver on his predecessor's promise of another Linebacker-style response in the event of future Northern aggression.

[76]Williamson Murray, "Air Power Since World War II: Consistent with Doctrine?" in *The Future of Air Power in the Aftermath of the Gulf War*, eds. Richard Shultz and Robert Pfaltzgraff (Maxwell AFB, Ala.: Air University Press, 1992), 106.

air combat were clearly reaching the practical limits of the existing paradigm by 1968. Viewed this way, it is evident that, rather than merely adding to the technological bedlam already in existence, the advent of effective precision guided weapons resulted in a vastly simplified approach to the ongoing air war in Southeast Asia.

Perhaps a better way to understand the simplifying effect precision guided weapons had on air warfare in Vietnam would be to examine the extent to which Texas Instruments Paveway guidance kits provided the solution to both "air wars" in Southeast Asia. Specifically, laser guided bombs proved extremely effective in two diverse roles during the 1972 Linebacker campaign: precise bombing of the North Vietnam homeland and repelling the North Vietnamese army in the field. In fact, Paveway bombs were equally well suited for destroying tanks and bridges. Thus, for example, on the very day that the Schlitz and Raccoon flight of F-4s neatly eliminated two tanks threatening U.S. Marines at the My Canh River, F-4s dropping laser guided bombs also destroyed six major bridges in the Hanoi-Haiphong area, including the venerable Paul Doumer Bridge. In all, scores of bridges and other strategic targets were demolished during Linebacker, while at the same time laser guided bombs were credited with twenty-two percent of all tank kills.[77] In possession of the most versatile and effective air weapon yet fielded, air power proponents at all levels began to foresee extraordinary possibilities for this new technology in future warfare.

Just how important precision guided munitions would become to U.S. military strategy and national security policy will be addressed in subsequent chapters. However, even before the Vietnam War ended the trend was clear—not only had the Air Force

[77]HQ PACAF, "Linebacker: First 120 Days," 22, 62; Kenneth P. Werrell, "Did USAF Technology Fail in Vietnam" *Military Studies* (Maxwell AFB, Ala.: Air Command and Staff College, 1997), 511.

determined that these weapons were vital to its future, but the aviation branches of the Navy, Marine Corps, and Army had similarly embraced precision weapons in unprecedented roles and numbers. In addition to the numerous Air Force Paveway variants already described, by the final year of the war the Navy had initiated the first carrier employment of laser guided bombs and was developing a capability for self-contained and night delivery of Paveway munitions using A-6 aircraft; the Marines had demonstrated Paveway release through overcast skies for close air support of ground troops; and the Army had tested Cobra helicopters with an air-to-surface version of its wire-guided TOW anti-tank missile in Vietnam.[78] Furthermore, the trend was decidedly toward semiactive laser guidance in the waning months of Vietnam, as the Army announced its Hellfire (for *hel*iborne, *l*aser, *fire* and forget) antitank missile, to be smaller and more capable than TOW, and the Marines contracted Texas Instruments to create a laser-guided variant of the Bullpup missile, designated the AGM-83 Bulldog, as a standoff close air support weapon.[79] Returning to the previously made Model T analogy, during the Vietnam War, Texas Instruments revolutionized aerial bombardment as assuredly as Ford revolutionized personal transportation half a century earlier.

Clearly, the Vietnam War, and particularly 1972, marked a watershed in the application of modern air power. Having finally attained the long-coveted capability of pinpoint bombing, U.S. civilian and military leaders quickly realized that air power could now be used in ways never contemplated before. Ground commanders in Vietnam came to view air power as a uniquely "switchable" faucet of firepower, able to strike the enemy

[78]Texas Instruments, "United States Air Force Paveway Laser-Guided Munitions," January 1972, TI Corporate Archives, 1, 8; TOW is an acronym for *T*ube-launched, *O*ptically tracked, *W*ire-guided missile.
[79]Pretty and Archer, *Jane's Weapon Systems 1973-74*, 126, 136-137.

with surgical precision, but with the flexibility to be shifted hundreds of miles in a mere matter of minutes.[80] Political leaders, exercising control at the lowest levels imaginable during Vietnam, similarly came to accept this refined air power as a tool of enormous potential. Referring to such leaders, the senior Air Force commander in South Vietnam during Linebacker stated: "they were anxious, of course, not to hit cities, and for that reason I never used anything but laser guided bombs in and around populated areas…I know where virtually every single bomb went."[81] Another senior Air Force leader in Vietnam, with prior combat experience in World War II and Korea, neatly summarized the unique status of air power by war's end, noting that "by the end of 1972 we could strike point targets in heavily defended zones, using only a few aircraft, with very high probability of success and very low probability of collateral damage."[82] This same general proved remarkably prescient in his follow-on observation that:

> Technological developments will bring further improvements in speed of response, range, and ability to apply enormous amounts of firepower with great precision; all of these improvements can help airpower compensate for the limitations imposed upon combat commanders by economic, geographical, and political considerations.[83]

In the next two chapters, it will become apparent that the precision guided munitions of the Vietnam War, indeed, "paved the way" to a revised national security policy—one that relied heavily upon air power to overcome just such limitations.

---

[80]Momyer, *Airpower in Three Wars*, 339; faucet metaphor borrowed from General Creighton Abrams.

[81]HQ PACAF, "Linebacker: First 120 Days," 61—a 12 November 1972 interview with General John W. Vogt Jr., Deputy Commander, Military Assistance Command, Vietnam, and Commander, 7th Air Force.

[82]Momyer, *Airpower in Three Wars*, 339.

[83]Ibid.

6. – The Aftermath of Vietnam: Gulf War and Peacekeeping

Although laser guided bombs were proven effective against tanks during Operation Linebacker in 1972, eventually destroying more than 100 Soviet-built tanks in Vietnam, Paveway weapons were considered unsuitable for this role by the outbreak of the Persian Gulf War in 1991. Tactics manuals recommended using such precision guided munitions on low-altitude missions against single, fixed targets deep within enemy territory, while relying upon dedicated aircraft—Air Force A-10s and Army Apache helicopters—and specialized munitions such as Maverick and Hellfire missiles, cluster bombs, and thirty-millimeter automatic guns to apply air power against armor. However, when it invaded Kuwait on August 2, 1990, Iraq fielded an army that was numerically the fourth largest in the world, including substantial quantities of modern equipment and a formidable tank force. In fact, prewar American intelligence reports estimated approximately 4,550 main battle tanks and 2,880 armored personnel carriers in and around Kuwait. Unable to achieve desired attrition levels during the first three weeks of the air campaign using traditional antitank tactics, war planners tasked the 48th Tactical Fighter Wing based at Taif, Saudi Arabia, to target their F-111F aircraft and Paveway munitions against enemy armor from medium altitude at night. On the night of February 5, wing commander Colonel Tom Lennon and Major Steve Williams, in Charger 7, with Lieutenant Colonel Tommy Crawford and Captain Scott Gillespie on their wing in Charger 8, embarked on a mission over Iraqi-held territory, carrying four 500-pound laser guided bombs each. Not only did they find the Iraqi tanks neatly arranged in circular drive-through trenches, but because the tanks had to run their engines every four hours or so for battery charging,

they showed up "white hot against the cold desert background" on the F-111 Pave Tack infrared targeting pods. As one participant later recalled, "the 500-pound GBU-12 would totally destroy a tank, and it was not uncommon to see the turret flipping away looking like a big lollipop." These two initial sorties were so successful that planners scheduled forty-four more for the next night. F-111s eventually flew 664 successful antitank missions, destroying 1,500 tanks, mechanized vehicles, and artillery pieces before war's end, while Air Force F-15E and Navy A-6 aircraft similarly altered tactics to concentrate on the nighttime destruction of armor using laser guided bombs.[1]

Post-Vietnam Analysis of Precision Guided Munitions

Following the withdrawal of American forces from Vietnam in early 1973, U.S. military leaders and policymakers were left to sort out the implications of the precision guided munitions acquired and tested during the war. Although still embroiled in the familiar Cold War with the Soviet Union, it was clear to many in the war's immediate aftermath that PGMs had changed not only the role of air power in limited wars, but potentially the approach to future warfare. However, despite a demonstrated near-zero circular error probable, PGMs did not immediately take center stage within the U.S. arsenal. In fact, for many Americans, the dramatic news footage of Operation Desert Storm came as a revelation, demonstrating a military capability they never dreamed their country possessed. As this work has clearly demonstrated, PGMs were anything but a recent development in 1991, and yet for many, even policymakers with a decided need to know, emphasis upon precision weapons for defense-related issues began only after their

[1]Michael J. Bodner and William W. Bruner III, "Tank Plinking," *Air Force Magazine*, October 1993, 29-30; quotations from Scott C. Gillespie, "Desert Shield/Desert Storm Memories," Speech to the Order of Daedalians, Flight 17—Albuquerque, N. Mex., 19 April 2001, Personal Files of author.

dramatic "debut" in Iraq and Kuwait. While heightened public awareness since the Persian Gulf War has significantly shaped the overall effect of this sophisticated class of weapons on national defense, the two decades between the Vietnam and Gulf Wars were also vitally important to the rise of this class of weapons. In fact, it was arguably during this period that precision guided munitions displaced the nuclear bombs and missiles of the Cold War as the "ultimate weapon" in the U.S. arsenal, a shift that would lead to a dramatically altered national security policy.

Even before the final curtain rang down on South Vietnam, airmen involved at the lower operating levels clearly appreciated the advantages of precision guidance and advocated greatly expanded reliance upon Paveway and similar weapons. Surprisingly, despite the numerous successful innovations outlined in the previous chapter, the Air Force restricted precision guided munitions to a single flying unit, the 8th Tactical Fighter Wing at Ubon, Thailand, throughout the entire war.[2] One young captain, assigned to this unit as an intelligence officer during the period of initial Paveway testing, from 1968 to 1969, noted how quickly the greater accuracy of laser guided weapons came to be accepted, and even taken for granted by aircrews. Responsible for reviewing and scoring the wing's visual and radar bomb damage photography each day, this officer recalled with obvious irony that "you could get just about as heated an argument going on a Paveway mission over an error of five or ten feet as you could with an average pilot on

[2]Larry M. Killpack, "End of Tour Report," 21 May 1971, AFHRA, Maxwell AFB, Ala., file number K717.131, 19-21; the 8th TFW "Wolfpack" admittedly evolved into an atypical fighter wing—by the final year of the war it was composed of the 16th Special Operations Squadron flying AC-130 gunships, the 13th Bomb Squadron Tactical flying B-57G bombers specially modified for night delivery of laser guided bombs, and four tactical fighter squadrons (TFS) flying F-4 fighters with the following specific missions: the 25th TFS specialized in delivery of anti-infiltration sensors; the 433rd TFS was the only Air Force fighter squadron equipped to deliver laser guided bombs; the 435th TFS was the only squadron in the world delivering the Mark 84 electro-optically guided bomb; and the 497th TFS was the only fighter unit in Southeast Asia dedicated to night combat operations.

their 500 feet."[3] Although this junior officer was in no position to dictate policy or change military strategy, his observation that a more general application of the Paveway bombing program would substantially enhance current and future war efforts was eminently credible, based as it was on an entire year's worth of personal comparative photo interpretation.

At a slightly more influential level, the subsequent commander of the 8th Tactical Fighter Wing, Colonel Larry M. Killpack, also quickly developed an appreciation for the accuracy, destructive power, and cost effectiveness of such weapons. Summing up his tour of duty, this commander stressed that "the most valuable lessons to be learned from my experiences in Southeast Asia are those associated with the introduction and delivery of the 'smart' bombs, particularly the Paveway I Laser Guided bomb."[4] He advocated greatly increased use of these weapons, including equipping other wings to carry laser guided bombs, but even more significantly, he attributed their limited usage in Vietnam not to "top level higher headquarters," but to an uninformed military bureaucracy at many levels. In a complaint reminiscent of frustrated bygone commanders seeking to hasten the promised advantage of emerging technology, Colonel Killpack suggested that:

> It was apparent that a general knowledge of the weapon capabilities, delivery limitations, parameters and particularly cost effectiveness was lacking among the working level troops responsible for working up the target and munitions information on a daily basis....Too many of these people seem to feel that the 'smart' bombs were very expensive and should be used only on unusual or highly lucrative targets, when, in fact, our experience demonstrated that the cost effectiveness of these bombs was far superior to any of our weapons against many routine targets.[5]

---

[3]Mark D. Kimball, "USAF Oral History Interview," 10 July 1970, AFHRA, Maxwell AFB, Ala., file number K239.0512-384, 12-13.

[4]Killpack, "End of Tour Report," 60.

[5]Ibid., 61.

It is obvious from such participant comments that initial demand for precision guided weapons came largely from the bottom up, in response to the very vocal advocacy of front-line commanders and combat aircrews.

However, it is clear that in the waning years of American participation in Vietnam, interest in and demand for such weapons was also emerging from much higher levels. For example, there is little evidence of any grassroots support for electro-optically guided weapons. Though his wing was exclusive custodian of both laser and electro-optical "smart" bombs, Colonel Killpack included only tepid support for the latter in his final report, noting that on average, only about twelve of his 435th Tactical Fighter Squadron's 450 monthly combat sorties employed electro-optically guided bombs. Despite this commander's modest optimism that the 1972 dry season might "possibly" occasion an increase in their use, the fact that such weapons were targeted almost exclusively against caves and river fords severely limited their usefulness in Vietnam.[6] A more scathing, but undoubtedly more reliable, assessment of this weapon was furnished by a contemporary crewmember, further down the "food chain" of this same wing. In characteristically blunt aircrew verbiage, he assessed the relative merits of these two bombs as follows:

> The electro-optical guided bomb performed poorly. I'm glad we didn't have those with us. Another squadron had that mission and the rumor was electro-optical bombs weren't worth much. I'm glad we had the laser guided bomb mission because we were up almost every day using them on something.[7]

And yet, both weapons continued, and continue still, to be developed. There ensued a lengthy debate at the general officer level between critics of the laser guided Paveway bombs, who argued the need for increased standoff range and a launch and leave

---

[6]Ibid., 22, 62.

[7]Electronic mail to the author from Dean Failor, Lt. Col. USAF Retired, dated 24 November 2001.

capability, and laser proponents, who decried the contrast seeker's limited ability to acquire significant targets. Rather than resolve the debate, the technophiles leading the Air Force struck a compromise—according to one wartime summary, "as it turned out, there was room for both weapons in the target spectrum in Southeast Asia."[8] Here then, was clear evidence of a "top down" demand for precision weapons in Vietnam.

Eventually, the demand would come from even higher. After withdrawing from Vietnam, the United States did not use precision guided munitions again for thirteen years, and yet the radical implications of this new breed of weapon did not escape the attention of postwar security analysts. One 1976 Rand Corporation study identified two important political consequences stemming from these new weapons. First, they provided the morally attractive and mutually beneficial possibility of disabling military targets without collateral damage, thus offering the political leadership a variety of military options to fit "the tone and intent of the political discourse." And, secondly, they greatly reduced the necessity for using nuclear weapons in certain cases—namely those in which warhead lethality was being used to compensate for inaccurate delivery—thus raising the nuclear threshold.[9] Another policy study the following year noted that precision guided munitions "constitute a quantum leap in technological capability of a degree equal to that involved in the advent of nuclear weapons," and expressed little surprise that, given the budgetary and political pressures of the day, both the United States and NATO had embraced precision weapons, with their promise of flexible

[8]Headquarters Pacific Air Forces, "Second Generation Weaponry in Southeast Asia," 10 September 1970, AFHSO, Bolling AFB, D.C., file number CHECO-K717.0413-80, 49; with the luxury of unequaled industrial resources, America frequently opted for such dual solutions in the twentieth century—examples during World War II include the decision to develop both the U_{235} and Pu atom bombs simultaneously, and to pursue a twin-axis strategy against the Japanese in the Pacific, mollifying both the Army and Navy.

[9]James Digby and S.J. Dudzinsky Jr., *Qualitative Constraints on Conventional Armaments: An Emerging Issue* (Santa Monica, Calif.: The Rand Corporation, 1976), 42-43.

response, enhanced deterrence, lower cost, and reduced manpower, as a panacea for the many problems of Western defense.[10] Thus, the political consequences stemming from these new weapons soon translated into attractive policy options.

In the wake of the Vietnam War, an increasing demand for such weapons began to come from high-level policymakers, civilian and military, for a variety of reasons. Major antiwar demonstrations in America as early as 1967 clearly indicated a growing dissatisfaction with a national security policy predicated upon what was perceived as needless human suffering. As one historian recently concluded, haunting memories of the Vietnam War, including anger and indignation over the fate of America's soldiers has "produced a climate of opinion in the United States in which, even with a professional army, excessive (defined as anything over several hundred) American casualties in any future war will probably not be tolerated."[11] Such conjecture has been born out by the historical record—since Vietnam, Americans have consistently avoided heavy casualties, friendly or civilian, especially when the United States itself was not directly threatened. This "give unless it hurts" attitude was perhaps best illustrated by the dramatic decline in public support for continued military intervention in Somalia, in 1993, following a skirmish that resulted in the first significant American casualties there.[12] One year later, America staged a casualty-free operation to restore ousted President Jean-Bertrand Aristide to power in Haiti, prompting a spate of speculation regarding the American

---

[10]Lawrence S. Hagen, *The Two Faces of Janus: An Assessment of the Politico-Military Impact of Precision-Guided Munitions* (Kingston, Canada: Queen's University Centre for International Relations, 1977), i, 2.

[11]Eric T. Dean Jr., *Shook Over Hell: Post-Traumatic Stress, Vietnam, and the Civil War* (Cambridge, Mass., Harvard University Press, 1997), 216.

[12]George J. Church, "Anatomy of a Disaster," *Time*, 18 October 1993, 44.

military's queasiness about death, and public intolerance of casualties.[13] The clear implication of this attitude, and the focus of ensuing commentary, was that such casualty aversion limited America's military options, hamstringing its foreign policy.

This dilemma of the 1990s was not a sudden development, however. In fact, analysts of public policy in the 1970s began focusing on a technological means to assert military power, while limiting the devastation of future conflicts. Testimony by one such expert before Congress in 1975, for example, noted that "the increasing precision possible in the delivery of weapons...is making possible the substitution of small weapons for large ones." Of course, the significance of such reduction in weapon size, which he clearly spelled out for legislators, was that:

> for many missions it may be possible for nonnuclear warheads to be substituted for nuclear ones. These developments will do a great deal to help set limits to the scope and level of conflict. And the prospect of being able to take more effective action, with less collateral damage, will enhance the deterrence of a significant range of action against our interest.[14]

In fact, so promising did this expert find his proposed solution, that he recommended "we should not only seek to have such capabilities ourselves, we should also encourage the Soviets to move in this direction.[15] Of course, as yet another analyst noted, "the existence of new weapons in no guarantee of dramatic change; correct application and organizational adjustments are also necessary."[16] Attempts to apply promising precision technology over the next two decades contributed to both the solution and the problem—both reducing casualties, and raising expectations of casualty-free future conflicts.

---

[13]See, for example, "Pentagon's Haiti Policy Focuses on Casualties," *New York Times*, 6 October 1994, A5, and "The No-Dead War," *New York Times*, 23 August 1995, A21.

[14]Henry S. Rowen, Congressional testimony reprinted in *Aviation Week*, 22 September 1975, 51.

[15]Ibid.

[16]Hagen, *Two Faces of Janus*, 3.

Thus, while America was decidedly casualty averse following its bitter experience in Vietnam, ironically, air power, in the form of the newly acquired capability for pinpoint accuracy, once again promised the means to achieve military objectives while minimizing casualties. The new capability of precise weapons, demonstrated in the latter stages of the Vietnam War, provided a new way to substitute air power for combat troops, resulting in a marked shift in the American way of war. As one historian noted, "the U.S. infantry in Vietnam lost its traditional role as the decisive and final arbiter of ground combat to take on a new mission—that of serving as expendable bait to lure the enemy out into the open where air...could do the work of destruction."[17] In the decades following Vietnam, precision guided munitions came to be accepted by the American public, and consequently employed by policymakers and military leaders, emerging as the weapon of choice for waging the new American style of "humane" war. This departure from the traditional pattern of waging war has, in turn, dramatically shaped the official formulation and pursuit of national security objectives, a topic that will be further developed in the next chapter. Ironically, this shift has led to anything but a decline in the use of military force to achieve those objectives.

Post-Vietnam Use of Precision Guided Munitions

Coming immediately on the heals of U.S. withdrawal from Vietnam, the Yom Kippur War in the Middle East provided an early indication of the effect precision guided munitions would have on future conventional warfare. Another in the ongoing series of Arab-Israeli wars of the twentieth century, the Egyptians achieved great surprise with

[17]Michael Clodfelter, *Vietnam in Military Statistics: A History of the Indochina Wars, 1772-1991* (Jefferson, N.C.: McFarland and Company, Inc., Publishers, 1995), 239.

their use of precision guided munitions and highly effective air-defense weapons in this short, intense war of October 6-24, 1973. Among the most devastating Egyptian surprises was the Sagger, an antitank missile with a range of almost two miles, that was manually guided to its target by means of a hand-controlled joystick.[18] Faced with a dwindling supply of ammunition and huge losses in tanks and aircraft, Israel appeared on the brink of defeat within days. However, in response to a personal plea from Israeli Prime Minister Golda Meir, President Richard Nixon made the crucial decision to re-supply Israel, and on October 12, the Air Force launched a massive airlift known as Operation Nickel Grass. Not surprisingly, armor proved to be of preeminent importance in the desert environment of the Yom Kippur War, both in the Sinai and on the Golan Heights. In fact, the tank battle between Egypt and Israel on Sunday, October 14, involving 2,000 tanks on both sides proved to be the largest clash of armor since the World War II Battle of Kursk in 1943. For this reason, the U.S. airlift was an undeniable key to victory, bringing about not only the timely re-supply of the flagging Israeli force, including M-60 tanks and 155 millimeter howitzers, but also providing a series of deadly new weapons that included Maverick and TOW antitank missiles.[19] Given the ferocity of this conventional fight for national survival, and the sophistication of the weapons employed, this conflict provided valuable insights into the changing nature of warfare—insights that did not go unnoticed by world military leaders.

Convinced more than ever of the utility of precision guided munitions in the wake of this Cold War intervention, the U.S. continued to rapidly expand and diversify its PGM

---

[18]Robert A. Doughty and Ira D. Gruber, *Warfare in the Western World* (Lexington, Mass.: D.C. Heath and Company, 1996), 945, 948.

[19]Walter J. Boyne, "Nickel Grass," *Air Force Magazine*, December 1998, 59.

arsenal. As early as 1971, sketches from Texas Instruments engineer Dick Johnson's early Paveway laser guided bomb notebook clearly envisioned a versatile family of variously sized bombs, each using a common guidance and control nose unit (Figure 18).

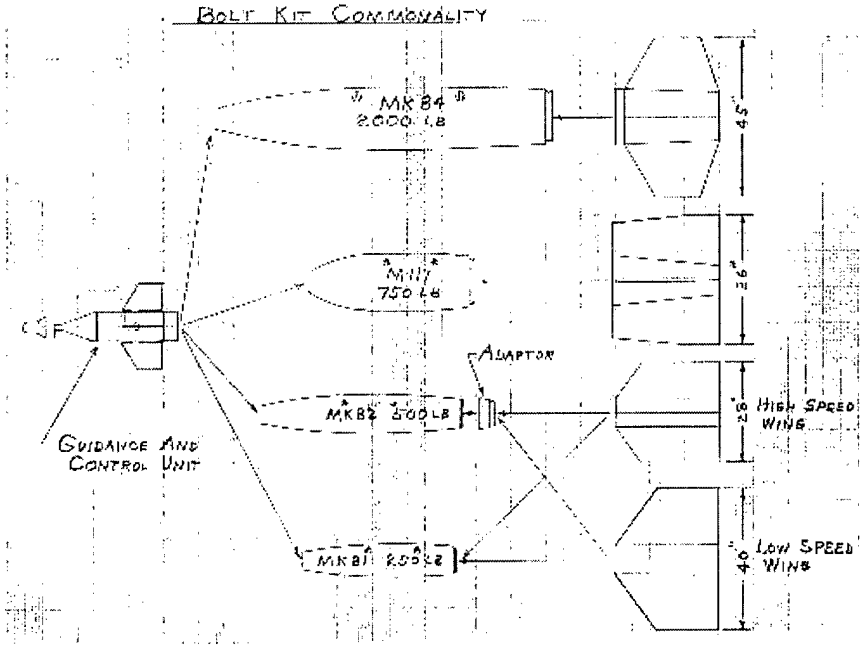

FIGURE 18
Early Texas Instruments Paveway Commonality Concept

Such commonality offered clear advantages, including the simplification of operations and logistics, and was implemented with Paveway in the early 1970s—only the aerodynamic surfaces changed to meet the requirements of each size bomb. A good indication of the priority given these weapons was the fact that, despite Congressional cutbacks in the 1974 budget, the Air Force scrounged money from other programs to keep Paveway alive.[20] However, by this time the original Paveway contract had lapsed. Having successfully delivered more than 100,000 of the first generation guidance kits, Texas Instruments was approached to develop a follow-on design. Of course, Paveway

[20]Richard P. Hallion, *Storm Over Iraq: Air Power and the Gulf War* (Washington: Smithsonian Institution Press, 1992), 305.

had originally started not as a production item, but as a quickly evolving hodgepodge of engineering expediencies. When the initial order for fifty units spawned an additional 200, Weldon Word's team was forced to introduce discipline into the design, freezing the configuration in order to transition to assembly line production. Word later recalled that during the two or three years of Paveway I production, "I made them get a big box and we put sheets in there of the things we wanted to fix and correct if we ever got a chance. That's why Paveway II happened. Paveway I was just riddled with problems. Paveway II was really the clean up."[21] Thus, in the late 1970s laser guided bombs received a much-needed overhaul.

Developmental testing of Paveway II went smoothly, and in 1976 Texas Instruments received a manufacturing contract for nearly 8,000 of the new, improved guidance kits. Chief among the improvements of this next-generation variant were folding tailfins that opened upon release for increased aircraft payload, upgraded electronics including predominantly integrated circuitry to improve reliability and reduce manufacturing time, improved bomb guidance and maneuverability, and cost-cutting features such as plastic lenses, ringtails, and other components.[22] In outward appearance, Paveway II was little changed from its predecessor, particularly the front end, which was still capped with the trademark birdie head. The guidance and control section to its immediate rear was made more pointed and streamlined, but still sported four moveable clipped-tip delta canards for steering. The bolt-on rear end assembly was once again a simple, non-maneuvering cruciform tail, with the addition of large, flip-out airfoil surfaces that doubled its

[21]Weldon Word, interview by author, 19 March 2001, Tyler, Tex., recording, Personal Files of author.
[22]Duncan Lennox, ed., *Jane's Air-Launched Weapons* (Alexandria, Va.: Jane's Information Group Inc., 1999), 31.

wingspan to approximately five feet after clearing the aircraft. Least changed of all was the warhead itself, which continued to be the Mark 84 or another low-drag bomb of the same series, ranging in size from 500 to 2,000 pounds. However, what Paveway II lacked in cosmetic upgrades, it more than made up for in enhanced performance. Early

FIGURE 19
Paveway II 2,000-Pound Laser Guided Bomb—Note Flip-Out Tailfins

testing demonstrated an accuracy at least as good as the earlier Paveway I, but with a vastly improved reliability rate. Additionally, when dropped from medium altitude, Paveway II displayed an effective range approaching ten miles.[23] While hardly authoritative, one Texas Instruments publicity photo graphically captured Paveway II's

[23]Ibid., 33.

precision, showing a Mark 84 not just hitting its target, in this case an Army deuce-and-a-half truck, but literally shattering the driver's window with its birdie head (Figure 19).

With the demonstrated capability of striking within inches of a designated target, not surprisingly, Paveway II captured the attention of allies and enemies alike. Britain became the first U.S. ally to acquire laser guidance, brokering a joint development program between Texas Instruments and two domestic aerospace companies in the late 1970s to produce Paveway II guidance units for the United Kingdom.[24] Ironically, this variant, incorporating a British 1,000-pound bomb design, was also the first tested in actual combat. Exactly ten years following Linebacker I, the operation that had so graphically showcased Paveway I laser guidance, the British found themselves embroiled in a nasty turf war with Argentina over the Falkland Islands. Perhaps the single most significant feature of this war, fought from April to June of 1982, was the demonstrated effect of the high-technology weapons that had entered the world's arsenals by the 1980s. Armed with French-manufactured Exocet guided missiles, the Argentines seriously threatened British maritime supremacy, surprising this great naval power with menacing air strikes that sent two warships, HMS *Sheffield* and HMS *Coventry*, along with the cargo vessel *Atlantic Conveyor*, to the bottom of the South Atlantic.[25] British troops easily defeated poorly trained and unmotivated Argentine conscripts during the invasion of East Falkland, but without superior technology in the form of aircraft carriers, submarines, and Sea Harrier aircraft armed with Sidewinder heat-seeking missiles and Paveway II laser guided bombs (Figure 20), it is unlikely this "retrieval force" would have been able to effectively project power over such great distances.

---

[24]Ibid., 31.

[25]Doughty and Gruber, *Warfare in the Western World*, 970-71.

TEXAS INSTRUMENTS

FIGURE 20
Paveway II on Sea Harriers in the Falklands—Note Birdie Heads Visible on Outboard Stations of Aircraft in Foreground

Of course, most Americans paid little attention to this distant war in the Falklands and did not become acquainted with this new generation of precision guided munitions until their own country launched similar weapons against Libya four years later. This air raid, codenamed Operation El Dorado Canyon, was carried out by a joint strike force of Air Force and Navy fighters on April 14-15, 1986, in response to the Libyan-sponsored terrorist bombing of a Berlin disco that left two U.S. soldiers dead.[26] Using Paveway II

[26]James A. Winnefeld and Dana J. Johnson, *Joint Air Operations: Pursuit of Unity in Command and Control* (Santa Monica, Calif.: The Rand Corporation, 1993), 52.

laser guided bombs, Air Force F-111 aircraft from RAF Lakenheath, England, precisely struck President Muammar Qaddafi's command headquarters, the military side of the airport, and the Sidi Balal terrorist training camp in and around Tripoli, while Navy A-6 aircraft from the USS *America* and the USS *Coral Sea* in the Mediterranean hit Qaddafi's alternate command post and the Benina airfield near Benghazi.[27] Based on the effects this raid had on subsequent Libyan policy and posturing, this use of precision weapons has generally been touted as an overwhelming success. In fact, targets in Libya were not hit with the desired precision or completeness of target coverage, and one Air Force jet and aircrew were lost in the process, making it less than a perfect performance for PGMs.

Perfection or not, during the 1980s it became apparent to even the most casual military observer that precision weapons translated into a significant advantage for any force that possessed them. Among U.S. allies this equated to heightened interest in the Paveway II system, and eventually over thirty nations, including Australia, Canada, France, Israel, Saudi Arabia, Taiwan, Thailand, and Turkey purchased and possessed the capability to use this family of sophisticated laser guided bombs.[28] During this same period, it became apparent to the Soviet leadership that "a new line in non-nuclear means of armed struggle had been developed," one identified with the "intellectualization" of weapons.[29] Until recently, specific details of the Soviet and Russian arsenals were simply inaccessible to the public. Fortunately, the 1997 appearance of a complete arms catalog has shed considerable light on early Russian attitudes toward, and development of, precision weapons. Although it clearly lagged the U.S. in precision technology, by

---

[27]Ibid., 53.

[28]Hallion, *Storm Over Iraq*, 305.

[29]Nikolai Spassky, ed., *Russia's Arms*, vol. VII, *Precision Guided Weapons and Ammunition* (Moscow: Military Parade Ltd., 1997), 8.

the 1980s Russia became convinced that real quantitative improvements in offensive and defensive weapon systems could be realized by achieving "high accuracy of hitting the target...through control of the projectile on its flight trajectory."[30] Evidence that the Russians became true converts of precision guidance, particularly following the breakup of the Soviet Union, can be seen in the transition of their approach to armed struggle from massive suppression of enemy manpower and weapon systems to destruction of the key elements and links of an enemy's combat organization.

Once the Russian leadership became convinced that the capability of selective target destruction with minimal collateral damage rendered precision guided weapons "preferable for missions of outstanding complexity in local armed conflicts and special counterterrorist operations," there remained only the task of actually creating the necessary technology.[31] As this work has illustrated at great length, America created true precision guided munitions through a complex, iterative process requiring immense resources applied over several decades. In contrast, the published record of Russia's development of comparable laser and electro-optically guided bombs states simply that:

> In our country, development and perfection of Precision Guided Weapons is based on the vast pool of scientific and engineering know-how of our defense industry establishments and their cooperation with our academic institutions that are accumulating their fundamental stock. And this time, too, the production sector was able to demonstrate once again its ability to offer advanced technologies in meeting the need for producing a qualitatively novel military equipment.[32]

However, a studied glance at the Russian inventory of guided weapons reveals uncanny resemblances to preexisting American munitions, at least in external design. For example, the Russian KAB-1500L laser guided bomb features a birdie head that is

[30]Ibid.
[31]Ibid., 9.
[32]Ibid.

virtually indistinguishable from Dick Johnson's original design, and folding tailfins that are veritable clones of the earlier Paveway II. Given such remarkable similarities, right down to the "GBU" designation stenciled on the warhead itself, in all likelihood, Russia caught up to American precision technology in the same way that America caught up to the British textile industry in the early 1800s—the old fashioned way, by stealing, or more politely, borrowing liberally.[33]

Of course, in typical American fashion, this country's military was not content to rest on the advantages of its Paveway II technology for long. In fact, the decade of the 1980s witnessed three distinct initiatives, each bringing ever more fantastic capabilities to the U.S. arsenal of precision guided munitions. The first, chronologically, was an extension of the electro-optical guidance work commenced during the Vietnam War. Designated GBU-15, this major development effort mated television guidance, and later an imaging infrared system, to the proven Mark 84 bomb to create a glide bomb with greater standoff range than conventional laser guided bombs, ideal for attacking heavily defended targets, air defense systems, or ships (Figure 21). Although weapon development actually began in 1974, it was nearly a decade before the GBU-15 entered service, and the infrared version was fielded only in 1987. However, this weapon enjoyed several distinct advantages over earlier PGMs. In its direct attack mode, the weapon locked onto the target before release, providing a launch and leave capability similar to Walleye and Hobo. Its more flexible, indirect attack mode allowed the weapon system officer to either fly the bomb all the way to the target using guidance updates transmitted via a data link, or lock the seeker onto the target after launch. Using this mode, the GBU-15 could be

[33]Ibid., 333; Lennox, *Jane's Air-Launched Weapons*, 284, suggests that the first Russian laser guided bomb, which entered service in 1975, was designed around U.S. components obtained in Vietnam.

used in weather conditions that precluded laser guided munitions, since its viewing system allowed airmen to acquire targets after the bomb emerged beneath an overcast.[34] So, while its cost was high—approximately ten times that of the comparable laser-guided GBU-10—this weapon provided potent, heretofore unavailable, precision capabilities.

FIGURE 21
Electro-Optically Guided GBU-15 On-Target—Note Domed Camera Housing in Nose has Replaced "Birdie Head" Laser Seeker

A second important initiative of the 1980s began as a Navy program to dramatically increase the standoff range of its Paveway II laser guided bombs, particularly in the anti-ship role. Development started in 1980 under the direction of the Naval Weapons Center at China Lake, California, but the principal contracts were quickly let to the recognized expert in this field, Texas Instruments. Designated the AGM-123 Skipper II, the resulting weapon combined a solid-fuel rocket booster from TI's Shrike anti-radar missile, with a Paveway II 1,000-pound GBU-16, giving Navy strike aircraft vastly

[34]Hallion, *Storm Over Iraq*, 306; the GBU-15 was developed by Rockwell International, formerly North American Autonetics, building on their Vietnam-era electro-optical designs.

extended range for attacking heavily defended vessels.[35] Skipper entered service in 1985, but it first captured media attention when Navy A-6 aircraft used three AGM-123s to sink the Iranian frigate *Sahand* on April 18, 1988. Quickly grasping the usefulness of such a long-range, precision weapon, the Air Force decided to create a rocket-boosted version of the electro-optical GBU-15 to achieve even greater standoff range. The resulting weapon, the AGM-130, stands today as perhaps the pinnacle of fielded PGM technology (Figure 22). With this hi-tech device, the U.S. can throw a 2,000-pound warhead from distances that, while still classified, easily exceed twenty miles, and then precisely fly it, via data link, through the enemy's front door. Such a weapon literally exceeds the imagination of earlier generations of precision guidance pioneers, and borders on science fiction. However, although initiated in the late 1980s, the AGM-130 experienced developmental difficulties and entered service only after the Gulf War.[36]

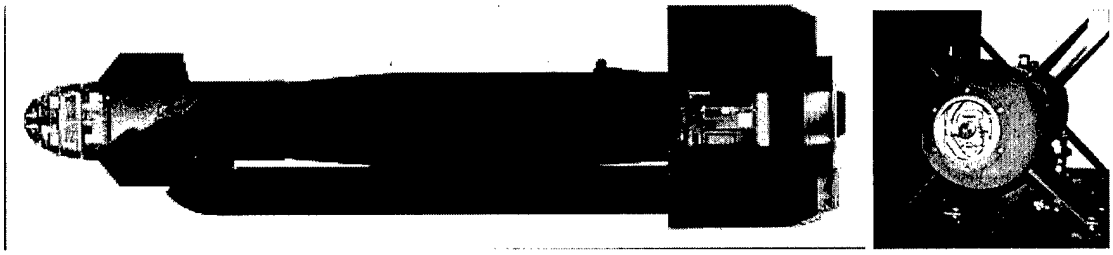

FIGURE 22
AGM-130 Rocket-Boosted, TV-Guided Mark 84 Bomb

The third important 1980s enhancement to the U.S. precision weapon arsenal was the next generation of laser guided weapons, the Paveway III series. Although an extremely effective and reliable aerial weapon, Paveway II had its limitations. Most obviously, it was optimized for bombing from medium altitude, a huge disadvantage in any scenario involving the massive air defenses of the Warsaw Pact, and a potentially limiting factor

[35]Ibid.; Lennox, *Jane's Air-Launched Weapons*, 311.
[36]Hallion, *Storm Over Iraq*, 307.

in the presence of obscurant weather. Thus, during the early 1980s the Air Force worked once again with Texas Instruments—this time to develop a low-level laser guided bomb. In order to create this novel standoff capability, old and new faces at TI worked together to produce a design that employed previously unavailable microprocessor technology, incorporated larger high-lift folding fins, substituted proportional for bang-bang guidance, and replaced the venerable birdie head with an improved scanning seeker (Figure 23).[37] The result was a bomb that, when dropped or lofted from outside the target basket, could still maneuver its way inside by first cruising blindly toward the target

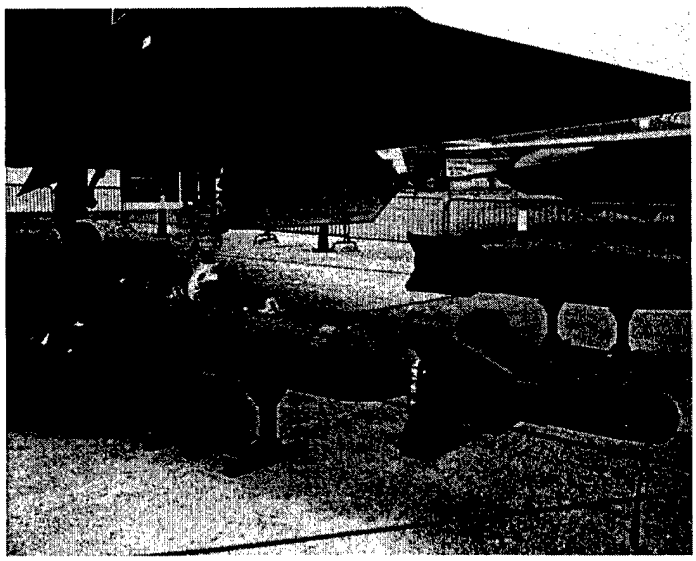

FIGURE 23
Paveway III 2,000-Pound GBU-27 with Stealth Fighter—Note Retracted Tailfins, Birdie Head Replaced by Scanning Seeker, and New BLU-109 Warhead

using a sophisticated autopilot, and then finding the laser spot with its scanning seeker.[38] As always, Paveway III guidance kits were adaptable to a variety of warheads, including the usual suspects. However, in 1985, a newly developed 2,000-pound hard target

[37]U.S. Department of Defense, *Gulf War Air Power Survey*, vol. 4, *Weapons, Tactics, and Training* (Washington, D.C.: Government Printing Office, 1993), 89; proportional guidance moved the aerodynamic control surfaces no more or less than required to achieve the desired change in direction.

[38]Lennox, *Jane's Air-Launched Weapons*, 312; Hallion, *Storm Over Iraq*, 306.

penetrator bomb, the BLU-109, entered service with the Air Force, providing a popular, interchangeable alternative to the Mark 84 for certain targets.[39] Paveway III started development in 1980, and entered service in 1986, the ten-year anniversary of Paveway II. However, at three to four times the cost, this third-generation system did not entirely replace its predecessor; rather, both series remained in production. Clearly, by the close of this decade, the U.S. possessed unsurpassed precision guidance technology—a fact that would shortly become apparent to the rest of the world.

Precision Guidance in the Gulf War

Although America entered its first major military engagement since Vietnam with a vast and diverse arsenal, the Persian Gulf War was characterized by its overwhelming dependence on the sophisticated precision weapons that have been the subject of this study. In its final report to Congress, the Defense Department repeatedly focused on the role precision guided munitions played in achieving such a quick, decisive victory in 1991. It concluded that "Operation Desert Storm validated the concept of a campaign in which air power, applied precisely and nearly simultaneously against centers of gravity, significantly degraded enemy capabilities." Furthermore, it identified the lack of precision guided munitions capability on many U.S. aircraft as one of the most serious shortcomings of the operation, stating "results argue that a higher percentage of U.S. attack aircraft should have PGM capability to increase the amount of target damage that

[39]Lennox, *Jane's Air-Launched Weapons*, 312; again PGM nomenclature can be intimidating and will, thus, be kept to a minimum in the body of text—for reference, Paveway II 2,000-pound bombs were designated GBU-10, with a suffix to identify the specific variant (e.g. A-E for Mark 84, G-J for BLU-109). For Paveway III, 2,000-pound bombs became GBU-24 (Mark 84), GBU-24A (BLU-109), or GBU-27, a variant designed specifically for internal carriage by the stealth fighter.

can be inflicted by a finite number of aircraft."[40] Even so, during just six weeks of Desert Storm the U.S. military dropped over 9,500 laser guided bombs alone—more than double the number released over North Vietnam from 1968 to 1972. And, although only eight percent of the total bombs expended in the Gulf War were precision guided, these 17,000 weapons caused well over 75 percent of the serious damage inflicted on Iraqi targets.[41]

Because of the vivid video images of the destruction of Iraqi bridges and other structures on the television news, including one particularly memorable scene of a guided bomb going down the ventilation shaft of an office building, the American public very easily accepted laser guided bombs as virtually infallible. Not surprisingly, this particular weapon was also singled out by both the 1992 congressional report and the more in-depth *Gulf War Air Power Survey*, published the following year, as indispensable. And, while it seemed to many that this war was fought with a new arsenal of high-tech weapons, in fact, the precision guided munitions used to such publicized effect in Desert Storm were not drastically different than their Vietnam-era predecessors. At the core were familiar names, rooted in the Vietnam War and its immediate aftermath, albeit in evolved form. Indeed, Paveway, Walleye, Maverick, Hellfire, TOW, and Shrike were all present in abundance in the Persian Gulf, as were Mark 84 and other general-purpose bombs. So well did this next generation of weapons perform, that analysts concluded what the American public no doubt already believed: "Desert Storm reconfirmed that laser guided

---

[40]U.S. Department of Defense, *Conduct of the Persian Gulf War: Final Report to Congress* (Washington, D.C.: Government Printing Office, 1992), 179-80.

[41]Thomas A. Keaney and Eliot A. Cohen, *Revolution in Warfare?: Air Power in the Persian Gulf* (Annapolis, Md.: Naval Institute Press, 1995), 191, 203; a detailed breakdown of the exact numbers, varieties, and costs of PGMs used in the Gulf War can be found in Table 196 of "Misc-60 Statistical Databases," 1992, AFHSO, Bolling AFB, D.C., file number 874805-6.

bombs possessed a near single-bomb target-destruction capability, an unprecedented if not revolutionary development in aerial warfare."[42]

Clearly, America entered the Gulf War with an impressive precision capability. Even more remarkable, however, was the way PGMs were adapted to unforeseen challenges as the conflict progressed. Three well-publicized incidents, in particular, illustrate how the U.S. developed and demonstrated ever-greater air power capabilities in the midst of this war. The first came in response to a growing oil spill that Iraq deliberately unleashed off the coast of Kuwait during the first week of the air campaign. In addition to its devastating effect on the regional environment, this expanding oil slick jeopardized planned naval and amphibious operations in the Persian Gulf, and threatened to overwhelm neighboring Saudi Arabia, where coastal contamination endangered this important ally's water desalination facilities. After consulting petroleum engineers and oilfield experts, military leaders decided a viable solution was the destruction of two manifolds—pipeline junctures that controlled the flow of all oil from Kuwait's Mina al-Ahmadi oilfields into a storage area, and thence to an offshore terminal. To carry out this special raid, on January 26, 1991, the Air Force dispatched four F-111 aircraft armed with the electro-optically guided GBU-15 bomb described in the previous section. Although normally targeted against heavily defended fixed targets such as airfields, bridges, and missile launchers, video data link allowed two GBU-15s to be precisely steered to the critical component of both oil flow regulator systems, effectively extinguishing the flow of oil and averting a major ecological calamity.[43]

---

[42]DoD, *Gulf War Air Power Survey*, 87.

[43]"U.S. Bombs Kuwait Oil Stations," *New York Times*, 28 January 1991, A1, A8; in a subsequent briefing to reporters, General H. Norman Schwarzkopf narrated the videotape recorded by one GBU-15.

A second example of the flexibility PGMs brought to air warfare in the Persian Gulf was the use of Paveway laser guided bombs in the antitank role already discussed. The concept of using a jet originally designed to fly long-range strategic bombing missions for dropping 500-pound bombs on individual tanks—later known as "tank plinking"—was rehearsed several times during Desert Shield in late 1990, but was not tested in combat until February 5, when expediency suggested the need for additional antitank weapons. Highlighting the effectiveness of this nighttime campaign, one Iraqi general reflected after the war that "during the Iran war, my tank was my friend because I could sleep in it and know I was safe....During this war my tank became my enemy, none of my troops would get near a tank at night because they just kept blowing up."[44] In this and other missions, the Paveway system stood out as the most cost-effective means of aerial attack, and came to dominate the battlefield, the counter-air campaign against airfields, strikes against Iraqi command and control targets, and the anti-bridge and rail campaign.[45] In addition, war planners came to love Paveway for the two simple reasons that the Pave Tack target designator pod's infrared imaging provided a night capability that allowed round-the-clock bombing, and its video record of the target from acquisition to impact provided immediate feedback for battle damage assessment.[46]

Perhaps the strongest indication of the utility and popularity of the laser guided bomb was simply the fact that demand exceeded supply. In fact, numerous coalition partners possessed a laser attack capability, but most quickly depleted their meager prewar stocks

---

[44]Richard P. Hallion, "Precision Guided Munitions and the New Era of Warfare," *Air Power Studies Centre Paper Number 53*, (Fairbairn, Australia: Air Power Studies Centre, 1997), 16.

[45]Ibid., 14; for comparison, while Maverick, Hellfire, and TOW missiles also handily dispatched Iraqi armor, their unit costs were, respectively, 10, 4, and 2 times more expensive than the $9,000 GBU-12—in contrast, the export model of Iraq's T-72 tank sold for approximately $1.5 million on the open market.

[46]DoD, *Final Report to Congress*, 138, 701.

once the fighting began. Anxious to keep its Tornado and Buccaneer aircraft gainfully employed, in mid-February the British sent an anxious request to the U.S. for additional Paveway II weapons. In response, the Air Force authorized the immediate transfer of 200 in-theater GBU-12s, and arranged for an additional 300 Paveway II guidance kits to be refurbished stateside and delivered to UK forces within weeks.[47] While the ability to strike with "pickle barrel" accuracy using Paveway and other PGMs is not generally disputed, it is a little known fact that many hardened Iraqi targets proved extremely resilient, even when directly hit. As one participant noted:

> the concrete bridges in Iraq turned out to be very difficult to destroy. It often took eight or more 2,000-pound laser guided bombs to destroy a bridge. The first two bombs would make a hole in the bridge. The next aircraft would put his bombs next to that hole, making a bigger hole, and so on until the bridge was no longer serviceable.[48]

Of course, this was not viewed as a PGM shortcoming, but rather further evidence of the inherent flexibility and utility of such weapons. After all, such accuracy was tantamount to a marksman surgically excising an entire bull's-eye using a small caliber rifle. Routine marksmanship of this sort opened up entire new vistas to air power.

Deeply buried, hardened underground bunkers in Iraq proved impervious even to this level of accuracy, leading to the introduction of a third wartime innovation. A deep penetrating bomb was not even in the early stages of research when Kuwait was invaded, yet in October 1990 the Air Force Armament Directorate at Eglin AFB, Florida, began work on one. In order to rapidly develop such a weapon for combat use in Iraq, designers

---

[47]Joint Chiefs of Staff, "Response to UK Request for Paveway II Bombs," 24 February 1991, AFHRA, Maxwell AFB, Ala., file number CSS-4-31 pt. 2; this sensitive communiqué is one of a handful of significant historical documents declassified at the request of the author—this particular memo was declassified on 13 March 2001 in accordance with guidance for post-Operation Desert Storm information.

[48]Gillespie, "Desert Shield/Desert Storm Memories," 4.

turned to existing, off-the-shelf technology, but a bomb casing with the required penetration capability simply did not exist. An innovative decision was made to construct extended-length bomb bodies from surplus hardened-steel howitzer barrels, which were machined to a ten-inch interior diameter and a fifteen-inch outer diameter and mated with the existing Paveway III GBU-27 guidance system and tail fins. The result, designated GBU-28, was an enormous bomb that weighed 5,000 pounds and measured almost twenty feet in length (Figure 24). However, since explosives had to be

FIGURE 24
Prototype GBU-28 Hard Target Penetrating Laser Guided Bomb

hand-loaded into a bomb body partially buried upright in the ground—by Eglin laboratory personnel literally passing buckets of tritonal—understandably, only two test prototypes and two operational bombs were produced. The first test weapon was dropped at the Tonopah range in Nevada on February 24, and penetrated more than 100 feet into the desert floor. In a sled test at Holloman AFB, New Mexico, two days later, the second demonstrator penetrated twenty-two feet of concrete and continued downrange for a half mile, barely scratched. Based on these results, the two operational bombs were rushed to the 492nd Tactical Fighter Squadron in Taif, Saudi Arabia, and dropped on the al-Taji command and control bunker with devastating effect on February 27, literally hours

before the cease-fire.[49] Results of this crash program proved so encouraging that the GBU-28 was subsequently procured as a standard inventory item.

Peacekeeping—Precision Guidance Since the Gulf War

With such unimpeachable results from tactics and technology, the lesson most Americans took away from the Gulf War was the one articulated by President George Bush: "Gulf lesson one is the value of air power...our air strikes were the most effective, yet humane, in the history of warfare."[50] American military interventions since Desert Storm, so-called peacekeeping and similar military operations other than war, which have become more commonplace in the aftermath of the Cold War, have not only reinforced this emphasis on air power, but have seen the reliance on precision weapons expand almost exponentially. For example, the first of two NATO peace implementation operations in the Balkans, Operation Deliberate Force in Bosnia in 1995, avoided ground fighting altogether by relying upon a relatively abundant supply of precision guided munitions. Post campaign analysts concluded that this approach was successful both because it did not "kill people and destroy property to an extent that would cause world opinion to rise against and terminate the operation," and because it gave the Serb faction minimal opportunity to fight back and inflict casualties on NATO and United Nations forces.[51] In other words, near-exclusive reliance upon PGMs allowed military power to be applied in an antiseptic way that never risked the loss of public support, either at home or abroad. As an indication of just how completely precision weapons had been

[49]DoD, *Final Report to Congress*, 165; David Fulghum, "USAF Developed 4,700-lb. Bomb in Crash Program to Attack Iraqi Military Leaders," *Aviation Week and Space Technology*, 6 May 1991, 67—though rarely mentioned, bomb #1 destroyed the bunker, while crew #2 misidentified their target and hit a dirt hill.

[50]DoD, *Final Report to Congress*, 89.

[51]Robert C. Owen, "Deliberate Force: A Case Study in Effective Air Campaigning," *Military Studies* (Maxwell Air Force Base, Ala.: Air Command and Staff College, 1998), 636.

embraced in just four years, in contrast to the Gulf War's eight percent, over ninety-eight percent of the munitions used by America in Bosnia were precision guided.[52]

This trend toward ever more reliance upon precision air weapons has only intensified in the few intervening years. Based on its experiences in both Iraq and Bosnia, the U.S. military concluded that its next generation of weapons required improved accuracy, adverse-weather capability, increased standoff, autonomous guidance, improved hardened target destruction, and the capability for both multiple releases per pass, and multiple targets per release.[53] In order to achieve such ambitious capabilities, air leaders planned to employ an impressive combination of Gulf-era precision weapons and cutting-edge new munitions, intertwining seeker technology with Global Position System (GPS) satellite links.[54] Such technology has given virtually every fighter and bomber in the inventory a precision capability.

Four recent additions to the U.S. arsenal underscore the growing emphasis being placed upon precision weapons. First fielded in July 1996, the GPS Aided Munition (GAM), designated GBU-36, mated the venerable Mark 84 warhead with a tail section containing GPS and inertial guidance equipment and proportional guidance fins. Although "seekerless," this weapon could be programmed to attack specific coordinates, bringing the B-2 bomber an all-weather launch and leave capability, and allowing it to independently target sixteen aim points on a single pass. Following its debut, the Air Force chief of staff announced that "we are beginning to change our thinking from how many aircraft it takes to destroy one target, to how many targets we can destroy with one

[52]Hallion, "Precision Guided Munitions and the New Era of Warfare," 17.

[53]Excerpt from *United States Air Force Issues Book 1997*, "Air Force Background Papers," *Operational Forces* (Maxwell Air Force Base, Ala.: Air Command and Staff College, 2000), 18.

[54]John A. Tirpak, "The State of Precision Engagement," *Air Force Magazine*, March 2000, 28-29.

aircraft."[55] A very similar weapon, the GBU-31 Joint Direct Attack Munition (JDAM) was on the verge of completing operational testing when the next Balkan Campaign, Operation Allied Force in Kosovo, began in 1999. Initial production batches were rushed into operational use, and eventually 656 of the new weapons were used in Kosovo.[56] Jointly developed for the Air Force and Navy by McDonnell Douglas (now Boeing), JDAM mated 2,000-pound general purpose Mark 84 or penetrating BLU-109 warheads with a tailcone similar to GAM, but at a small fraction of the price (Figure 25).[57] The AGM-154 Joint Stand-Off Weapon (JSOW), developed by Texas Instruments (now Raytheon Defense Systems), was also first fielded in 1999, and used similar inertial and GPS guidance. However, this Navy-spearheaded weapon differed markedly from other PGMs in appearance, with foldout wings that actually made it a stealthy glide bomb with vastly increased standoff range (Figure 25).[58] And finally, currently undergoing testing, the next major advance in precision attack will come from the AGM-158 Joint Air-to-Surface Standoff Missile (JASSM). Developed by Lockheed Martin, this stealthy 2,000-pound weapon flies hundreds of miles after launch, combines GPS cuing and inertial navigation with a terminal seeker, can strike hardened targets, and is slated for all-weather delivery by most Air Force and Navy fighters and bombers.[59]

---

[55]"Air Force Background Papers," 18.

[56]Tirpak, "The State of Precision Engagement," 28-29; although stocks ran low, this weapon's ability to achieve results even in bad weather led air component commander Lieutenant General Michael Short to declare the combination of the B-2 bomber and JDAM "the No. 1 success story" of Allied Force.

[57]Ibid.; JDAM was expected to have a unit cost of $40,000, but streamlined contracting methods brought costs to under $20,000 apiece, while the GBU-36 GAM had a unit cost of $143,000. JDAM was also produced as a 1,000-pound variant, the GBU-32, using the Mark 83 or BLU-110 warhead—used exclusively by the B-2 bomber in Kosovo, JDAM has since been certified on F-16 and F-15E fighters.

[58]Ibid.; JSOW has also been purchased by the Air Force, at a unit cost of approximately $200,000, for use on B-52, B-1, F-16, and F-15E aircraft.

[59]Ibid., 27; at $400,000 apiece, JASSM will also replace million dollar Tomahawk and air-launched cruise missiles—note: acronyms above are pronounced Jay-dam, Jay-sow, and Jazz-um, respectively.

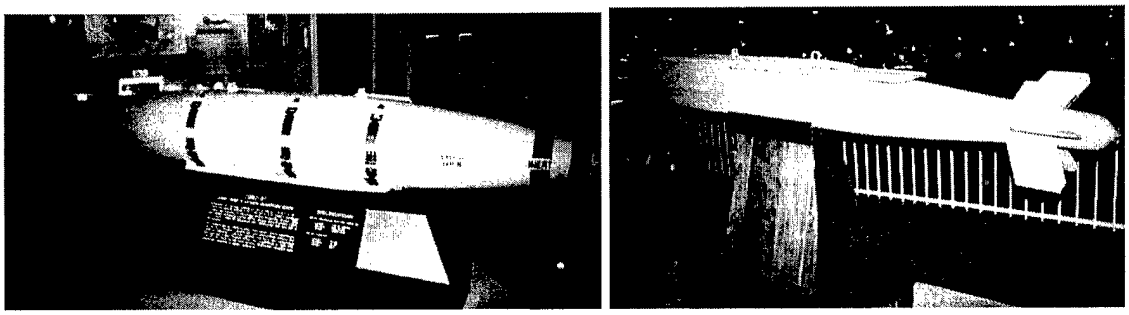

FIGURE 25
JDAM (left) and JSOW (right)—Note Foldout Wings on Top of Latter

However, this latest generation of precision weapons has not entirely replaced the earlier generation used to such devastating effect in the Gulf War. In actuality, the new "seekerless" GPS-guided bombs are classified as near-precision munitions—not quite as precise as the laser and electro-optical weapons discussed above. Even so, because ninety percent of JDAMs used in Allied Force struck within forty feet of their intended targets, these weapons began to be treated as precision weapons for targeting purposes. Of course, there are still numerous applications that might demand the ten-foot accuracy of laser or electro-optical guidance, including the destruction of pinpoint, politically sensitive, and mobile targets. In order to preserve, and, indeed, expand this capability, the U.S. military not only continues to procure such weapons, but has taken great pains to increase their range of missions. For example, the Air Force has begun installing GPS receivers on all its laser guided bombs to give them an all-weather capability. Another innovation, used successfully during the final stages of Allied Force, was the installation of a laser designator on the Predator unmanned aerial vehicle, allowing targets to be selected and illuminated remotely from low level, beneath an overcast if necessary, without endangering aircrews. Recently, this remote capability was taken one step

further. During a demonstration in Nevada on February 21, 2001, an unmanned Predator attacked and destroyed a tank using a Hellfire laser guided missile, a capability that has since received some notoriety in Afghanistan.[60] In fact, new potential uses and future design concepts for precision guided munitions seem to emerge every day, underscoring their central role in America's overall military strategy.

Clearly, this country's experience with precision technology in Vietnam, reinforced in the Persian Gulf, set a clear-cut agenda that has led to the conscious development of and dependence upon ever more potent precision air weapons. Participation in two Balkan peacekeeping operations in recent years has demonstrated just how completely PGMs have altered America's approach to warfare. Perceptions of what can be accomplished using air power alone resulted in the complete absence of friendly ground forces in both campaigns, or even the threat of their use in Kosovo. The decades following the Vietnam War have witnessed the rise of PGMs as a class of weapons, elevating them in importance until they have become the centerpiece of the U.S. arsenal. Indeed, during this period precision weapons took on expansive new roles and missions, virtually relegating the nuclear bombs and missiles of the Cold War, and arguably the conventional ground forces as well, to the sidelines. The development of precision weapons, in ever-increasing numbers, diversity, and sophistication, as outlined in this chapter, provides unmistakable evidence of a conscious decision to emphasize PGMs and de-emphasize previously central weapon systems. What remains to be demonstrated in the next chapter, is the important effect this technological development has had on U.S. national security policy.

---

[60]Ibid., 28; Peter Grier, "Aerospace World," *Air Force Magazine*, April 2001, 12.

7. – Policy Implications

With the collapse of the Soviet Union, the United States became the world's only superpower. It has been argued that America's strength relative to potential adversaries is such that the probability of two major powers going to war with each other has become effectively zero. However, this does not imply that war and conflict will cease to exist, for this has clearly not been the case in the past decade. Rather, proponents of this argument contend that future conflicts will simply be different and at a lower level, threatening vital interests of the United States only indirectly. The challenge for airmen in today's post-cold war environment has been to convincingly demonstrate that air forces continue to be relevant in such low-level conflicts. Consider the following hypothetical situation posited by a recent RAND Corporation study. Rather than fighting another nation state in conventional battle, suppose in the future an individual American city finds itself under sporadic attack by a lone urban guerilla. Indeed, such an individual might well feel invulnerable as a sniper in a crowded urban environment. In fact, law enforcement officers, using advanced technologies such as Lawrence Livermore's Lifeguard system, potentially have the ability to instantaneously track a sniper's bullet back to its point of origin with an accuracy of two feet. Using multiple analyzers, the track could be refined to within one inch. With such precise coordinates, reprisal from the air becomes a viable option. One outspoken air power proponent has suggested that in the future, response to such a scenario might come in the form of a fighter jet "releasing a laser-guided soft and lightweight sticky foam bomb that could burst in a

room and kill or disable a sniper without damaging or endangering the surrounding structure or building.[1]

The Changing American Way of War

American air power advocate William "Billy" Mitchell correctly predicted before 1925 that the advent of the airplane meant that an entire new set of rules would have to be devised for the conduct of war, and a new set of ideas about strategy learned. He further asserted that the innovation of the airplane would change forever the missions of armies and navies, rendering entire weapon systems obsolete.[2] Initially, the development of U.S. air power appeared very much a logical extension of the traditional American approach to war, relying upon attrition-based strategies and the efficient employment of technology to defeat enemy forces. However, the introduction of nuclear weapons in 1945 brought sweeping changes to warfare, introducing such concepts as retaliation and deterrence, and seemingly fulfilled the more fantastic prophesies of Mitchell, Giulio Douhet, and others. Following America's experience with limited war in Korea, it became apparent that, even in the midst of a cold war, air power would play an important continuing role in the arena of non-nuclear conflict. Writing in the late 1950s, nuclear strategist Bernard Brodie conceded that any nation seeking to prevent war through commitment to a strategy of deterrence must also "provide a real and substantial capability for coping with limited and local aggression by local application of force."[3]

Ironically, when the United States entered yet another limited war in Vietnam the following decade, it did so once again with an air force optimized for nuclear combat, not

[1]Richard P. Hallion, *Air Power Confronts an Unstable World* (London: Brassey's, 1997), 124, 228.
[2]William Mitchell, *Winged Defense* (New York and London: G.P. Putnam's Sons, 1925), xv-xvi.
[3]Bernard Brodie, *Strategy in the Missile Age* (New York: Harper and Row Publishers, 1959), 396.

the local application of force of which Brodie spoke. However, in the course of this bitter decade-long struggle, the U.S. military developed unprecedented technological capabilities, foremost among them those associated with the advent of true precision weapons, allowing potent combat force to be brought to bear at localized points. The resulting shift in postwar military capabilities and doctrine produced a military force that could be deployed rapidly in support of U.S. national objectives other than the total defeat of an armed enemy. Indicative of this shift, in February 1977 the Defense Department mandated that forces above and beyond those required by North Atlantic Treaty Organization obligations be maintained for deployment. As a direct result, the Rapid Deployment Joint Task Force was established in March 1980.[4] Clearly, war had come to be viewed in a completely new way by policymakers. In past conflicts, military victory was generally thought of as the decisive defeat of an enemy, breaking his will to wage war and forcing him to sue for peace. Increasingly, however, victory came to mean the attainment of stated, often limited, objectives. As a result, a new American way of war has emerged in which U.S. forces are expected to bring military power to bear against an enemy quickly, decisively, and with minimal risk of heavy casualties.

Obviously technology, and specifically air power, played a critical facilitating role in this updated approach to warfare, with its new genre of limited objective missions. While such technology figured prominently in numerous pre-Gulf War operations of the 1980s—notably air strikes in Lebanon and the airborne invasion of Grenada in 1983, the capture of terrorists involved in the Achille Lauro incident in 1985, retaliation against Libya in 1986, and Operation Just Cause in Panama in 1989—Operation Desert Storm

[4]Lewis S. Sowell Jr., *Base Development and the Rapid Deployment of Force: A Window to the Future* (Washington, D.C.: National Defense University Press, 1982), vii, 15.

proved the real turning point in the evolving nature of warfare. As the Air Force chief of staff pointed out in the aftermath of this predominantly aerial war:

> The political context for using force is also changing quite rapidly. The Russians call Desert Storm 'the first modern war'...but I wonder whether instead it may not be 'the last ancient war,' ancient in the sense that it involved a rather traditional cross-border aggression, clearly defined objectives on each side, straightforward employment of conventional forces, and so forth.[5]

Historically, the United States has not displayed a clear understanding of war as an instrument of policy. Rather than employing forces in order to achieve political ends, the American government has routinely pursued total military victory, often at the expense of political considerations.[6] However, in recent years American national security policy has made allowance for the use of military force in ways not traditionally associated with war. The application of military force, thus, has become a viable alternative in the pursuit of any national objective. It could be argued as a corollary to this logic that the Cold War ended precisely because it became impossible to find any valid political objective to justify the use of nuclear weapons. Finally, as Americans have become increasingly casualty-averse since Vietnam, it has likewise become extremely difficult to find any valid political objective that might justify the expenditure of American lives.

During this same period, air power has come to be used as a means of projecting force when political circumstances make traditional military objectives hard to define. Humanitarian and peacekeeping missions, antiterrorism, and anti-drug trafficking efforts certainly fall within this category, and represent the predominant use of American air power in the past several decades, and certainly since Desert Storm. What is happening,

---

[5]Merrill A. McPeak, "The Key to Modern Airpower," *Air Force Magazine*, September 1993, 44.

[6]Russell F. Weigley, *The American Way of War: A History of United States Military Strategy and Policy* (Bloomington: Indiana University Press, 1973), xix.

then, is that military force, in the form of precision aerial bombardment, is being used to achieve national objectives that before would have been pursued using exclusively nonmilitary (i.e. diplomatic, economic, or other) instruments of national power. And, perhaps the single most important characteristic of air power that has led to its use in achieving nontraditional objectives is its perceived lack of risk. That precision air strikes came to be viewed as "risk free" is evident from high-level testimony before the Senate appropriations defense subcommittee in April 1993, in which the Air Force chief of staff stated that bombing Serbian positions around the besieged city of Sarajevo would be effective and would involve virtually no risk to U.S. pilots.[7] Based on subsequent military operations, the nation's senior leadership seems convinced that, for the first time in history, overwhelming military force can be applied with pinpoint accuracy, without risking the lives of Americans. Thus, the advent of precision has dramatically shaped the way national security objectives are pursued, leading to an increase in the use of military force to achieve those objectives.

Armed with the technological means, finally, to apply air power precisely yet decisively, without unreasonable bloodshed, it became easier to isolate valid political objectives that, while insufficient to justify the use of nuclear weapons or even the commitment of ground forces, might justify the use or threat of air strikes. That precision air strikes have become the *de facto* "coercive arm" of American national security policy is obvious from the frequency and diversity of recent air power involvement. Perhaps the

[7]"Is McPeak's Air-Power Solution Viable?," *Air Force Times*, 1 November 1993, 31; one very real risk, which tends to be forgotten or at least minimized, is the potential not for casualties, but for captured American airmen. Captives represent a potent source of political and diplomatic leverage for enemies, as illustrated by the capture of Navy Lieutenant Robert Goodman in Lebanon during a 1983 air strike against Syrian positions in that country. Goodman's quick release, secured by then-presidential candidate Jesse Jackson, belied America's vulnerability during this precarious incident.

outstanding, but certainly not isolated, examples of such usage over the past decade are to be found in the former Yugoslavia and Iraq. Well before the U.S. and its NATO allies launched the alliance's first-ever military operation in 1995, dominated by the Deliberate Force air campaign, the threat of air strikes had been repeatedly used in an attempt to rein in the Bosnian Serbs. Similarly, ongoing operations in Iraq since the end of the Gulf War have taken the exclusive form of threatened and actual air strikes.[8] Clearly, military force has been used in support of national policy on an unparalleled scale in recent years. Yet, rarely was the military involved in what could be called war, particularly when contrasted with the traditional attrition-based wars of the past century. Thus, the American approach to both war and national security policy formulation has changed, and the expanded role of air power in achieving nontraditional objectives has, to a great extent, driven that change.

Consequent Policy Changes

In contrast to the secrecy that shrouded national security objectives at the height of the Cold War, epitomized by the tightly-controlled top secret 1959 document "Basic National Security Policy—Policy Paper NSC 5906" discussed in chapter 3, policymakers of the past two decades have been much more forthcoming. In fact, Section 603 of the Goldwater-Nichols Defense Department Reorganization Act of 1986 mandates the annual release of a clear statement of national security strategy by the executive branch. As a

[8]Ibid.; examples in the former Yugoslavia have been numerous—in early August 1993, in response to flagrant artillery barrages by Bosnian Serbs on Sarajevo, President Bill Clinton threatened air strikes and the Serbs withdrew their guns within two days. Six months later, Secretary of State Warren Christopher again raised the possibility of air strikes after a mortar attack on a crowded Sarajevo marketplace left sixty-six dead and hundreds injured (see "Aides Renew Threat of Strikes," *New York Times*, 6 February 1994, A3). Eventually threats gave way to the Deliberate Force and Allied Force air campaigns discussed in the previous chapter. In Iraq, examples of both threats and actual strikes have also been plentiful. For a recent example, see "Iraq Attack Missed Half its Targets," *Morning Call*, 22 February 2001, A6.

result, it is a relatively straightforward task to identify recent national security objectives, and the means by which they have been pursued. Foremost among the three core objectives articulated in recent versions of the national security strategy document, not surprisingly, is the goal to enhance America's security—the other two being to bolster America's economic prosperity, since economic and security interests are viewed as inextricably linked, and to promote democracy and human rights abroad.[9] This document also clarifies U.S. national interests, categorizing them as vital interests, important national interests, or humanitarian and other interests. In the past, use of the military instrument of national power was reserved almost exclusively for the protection of vital interests, those of broad, overriding importance to the survival, safety, and vitality of our nation. Clearly, by the 1990s national security policy not only allowed, but prescribed, military intervention in the pursuit of a growing range of national interests.

Regarding the decision to employ military force, current policy still maintains that national interests will dictate when this extreme measure is to be taken, and emphasizes that when vital interests are at stake, the use of force will be decisive and, if necessary, unilateral. Consequently, it has been the policy of the United States since 1993 to maintain the military capability to fight and win two simultaneous major theater wars, a capability intended to reassure friends and allies since it "deters opportunism elsewhere when we are heavily involved in deterring or defeating aggression in one theater, or while conducting multiple smaller-scale contingencies and engagement activities in other theaters."[10] This strategy for defeating aggression in two theaters has also provided a

---

[9]U.S. President, *A National Security Strategy for a New Century* (Washington, D.C.: The White House, 1999), iii, 21.

[10]Ibid., 19.

hedge against the possibility that encountered threats might be larger or more difficult than expected. However, while winning major theater wars is the ultimate test of the U.S. armed forces, and the primary mission for which they are trained, equipped, structured, and funded, it is difficult to identify an example in recent decades wherein threatened vital interests dictated such a use of military force.

Much more common has been the employment of military forces in resolving threats to "important national interests," those that "do not affect our national survival, but do affect our national well-being and the character of the world in which we live." Examples of such interests include regions in which the U.S. has a sizable economic stake or commitments to allies, protection of the global environment, and crises with a potential to generate destabilizing refugee flows. Specifically identified by the Clinton administration as examples of the use of military force in pursuit of such U.S. interests were efforts to restore democracy in Haiti and operations to "end the brutal conflicts and restore peace in Bosnia and Kosovo."[11] Even further removed from national survival, humanitarian and other interests are those acted upon solely because American values demand it. Examples of such interests include response to natural and manmade disasters, promoting human rights and opposing violations of those rights, supporting democratization and the rule of law, and promoting sustainable development abroad. Historically, such interests have been pursued almost exclusively through non-military instruments of power, and indeed, recent statements of national security policy concede that "generally, the military is not the best tool for humanitarian concerns."[12] However, current policy allows that "under certain conditions use of our Armed Forces may be

[11]Ibid., 1-2.
[12]Ibid., 20.

appropriate" for such humanitarian efforts—conditions that seem to have been met more and more frequently in recent years. Certainly, U.S. intervention in Somalia in 1992 fit this category, as did subsequent military operations in the former Yugoslavia, despite attempts to tie the latter to more important national interests.[13]

Not surprisingly, current policy states that "in all cases, the costs and risks of U.S. military involvement must be commensurate with the interests at stake." Specifically in the case where humanitarian and other interests are motivating the use of the armed forces, policy dictates that such efforts "entail minimal risk to American lives."[14] The fact that the U.S. military has been increasingly involved in operations worldwide, in support of interests that arguably have not been vital to national survival in many decades, is a clear indication that such armed interventions are considered both low-cost and low-risk. How America came to accept the application of deadly force as a low-risk enterprise has been an underlying theme of this work. Clearly, American policymakers have come to view PGMs as a sort of ultimate weapon, providing them a humane military option to resolve a wide variety of previously intractable foreign affairs problems. While the current policy statement does not single out specific weapon systems, it includes the admission that "exploiting the revolution in military affairs is fundamental if U.S. forces are to retain their dominance in an uncertain world."[15] Since the current RMA has been demonstrated to be dependent on new technology, and specifically the emergence of this class of weapons, such a statement is tantamount to an endorsement of precision air strikes as a key element and significant shaper of national security policy.

---

[13]Ibid.
[14]Ibid.
[15]Ibid., 21.

Even more direct indicators of the critical role of precision guidance technology in an evolving national security policy came from high-level policymakers themselves in the immediate aftermath of the Persian Gulf War. The Department of Defense has an obvious stake in formulating and advancing such policy, since the responsibility for providing viable options and executing military solutions to national security crises rests, ultimately, with this government agency. In his first postwar annual report to the President and Congress, Secretary of Defense Richard B. Cheney stated that tactical air forces "constitute a powerful and highly flexible component of the U.S. deterrent" and, as such, "are an essential element of this nation's crisis-response capability."[16] Citing the fact that in the previous thirteen months, the U.S. had utilized the rapid-reaction capability of tactical air power twice—in Operation Just Cause in Panama and Operation Desert Shield in the Persian Gulf—Cheney touted the key strengths inherent in modern air power, noting specifically that "the size and scope of tactical air operations can be quickly tailored to meet national objectives."[17] Given the U.S. military's success in Iraq earlier that year, there can be no doubt that Cheney equated tactical air operations with the precision strikes so conspicuous in that conflict.

Similarly, it is clear that the national objectives Cheney spoke of meeting went well beyond traditional self-preservation. That the U.S. pursued a diversity of security-related goals was clearly articulated the previous year by Undersecretary of State for Political Affairs Robert M. Kimmitt, who declared that "our broad national objectives remain unchanged: to deter military attack against the United States, allies or friends, and to

---

[16]U.S. Department of Defense, *Annual Report to the President and the Congress* (Washington, D.C.: Government Printing Office, 1991), 70.

[17]Ibid.

encourage political reform and liberalization."[18] It is obvious from the following statement, subsequently made by Cheney, that deterring straightforward military threats was no longer the primary concern of the U.S.

> The conclusion is clear: the turbulent events of the past few years have left us with a different world, but not necessarily one that is less threatening to national interests. U.S. interests will become increasingly vulnerable in the years ahead to threats from nations, political factions, or other elements (drug cartels, terrorists) that heretofore lacked significant military capabilities. To counter these emerging threats, maintain critical tactical advantages and enhance the survivability of our forces, the United States must continue to pursue the improved capabilities afforded by advanced-technology aircraft.[19]

Of course, it is understood that such aircraft have utility only as platforms for launching advanced-technology munitions. Here, then, in a direct statement by an official policymaker, is confirmation that, indeed, potent air power technology is the key to a viable national security policy. In order for government leaders to achieve America's stated national security objectives over the past decade, they absolutely needed a mechanism for countering the non-traditional threats enumerated by Secretary Cheney. It is highly significant that he singled out the air weapon as that mechanism.

Even more telling have been the priorities that have emerged from and been funded by subsequent Quadrennial Defense Reviews (QDRs). Prepared every four years to recommend necessary changes in strategy and force structure, post-Desert Storm QDRs in 1993, 1997, and 2001 have shown a marked trend toward emphasis on the long-range precision strike capability. For example, following the 1993 QDR, Secretary of Defense Les Aspin made substantial force cuts, reducing the U.S. military from about 1.6 million to 1.4 million active duty personnel, at the same time imposing the requirement to fight

---

[18]U.S. Department of State, *American Foreign Policy: Current Documents* (Washington, D.C.: Government Printing Office, 1990), 41.

[19]DoD, *Annual Report 1991*, 70.

two major regional wars simultaneously—a direct reflection of the belief that agility and precision, not mass, had prevailed in Iraq.[20] However, to truly appreciate how far this trend has extended, one need only examine proposed inputs to the 2001 QDR. Preliminary details of this study, announced in the summer of that year as the Pentagon worked toward a statutory deadline of September 30, revealed plans to abandon the requirement to fight two major wars simultaneously, thus paving the way for further personnel cuts in order to free up money for modernization of the armed forces.[21] In order to accomplish the new requirement, to fight and win one regional war while maintaining sufficient forces abroad to deter aggression by another enemy and carry out a number of smaller-scale deployments like those in Bosnia, Somalia, and Haiti—still a rather tall order—the U.S. military planned even greater emphasis on long-range precision air strikes.

Air Force inputs to the 2001 QDR, not surprisingly, supported such an approach. However, rather than requesting an expansion of the manned bomber force, plans called for greater emphasis on "radically smaller, more precise munitions."[22] In fact, the shift toward even greater emphasis on PGMs should come as no surprise, especially given the experience base of QDR architects. Heading up the most recent Air Force Quadrennial Defense Review effort was Major General David Deptula, who ten years earlier as a lieutenant colonel had served as chief planner of the Desert Storm air campaign in

[20]Susanne M. Schafer, "Study Advises Homeland Defense Role," *Morning Call*, 2 October 2001, A3.

[21]Thom Shanker, "Military Scuttles Strategy Requiring '2-War' Capability," *New York Times*, 13 July 2001, A1; leaked to the press from a classified document known as "terms of reference," detailing policy and budget requests for personnel and weapons—prior to 11 September, the terms of reference called for elimination of two Army divisions, one Navy carrier battle group, and one Air Force fighter wing.

[22]John A. Tirpak, "Bomber Questions," *Air Force Magazine*, September 2001, 37.

Riyadh, Saudi Arabia.[23] Addressing a conference in Washington in mid-2001, General Deptula explained that the U.S. could, indeed, retain the ability to conduct the numerous missions outlined in the QDR, "if we fully leverage the capabilities of modern aerospace power—one of which is to rapidly halt aggression using precision engagement."[24] Interestingly, even before the terrorist attacks of September 11, 2001, this national security blueprint called for the elevation of homeland defense to one of the military's four main capabilities. However, while admittedly assigning the military some increased domestic duties in battling nuclear, biological, and chemical terrorism, the use of the term *homeland defense* here referred primarily to the Bush administration's plans for missile defense. All indications prior to the "9/11" catastrophe were that the security of the U.S. could continue to be assured with a policy that offset planned decreases in both numbers and theater war-fighting capacity with enhanced precision strike capabilities.

Precision Guidance and the Culture of Casualty Aversion

Throughout the decade of the 1990s a heated debate took place in the national security and U.S. foreign policy communities over the proper role of air power in national security. In the immediate aftermath of the Gulf War, this debate quickly polarized between enthusiastic air power advocates and a skeptical ground power school.[25] Based largely on the perceived lessons of Desert Storm, air power enthusiasts argued that wars could now be won by bombing just a handful of key targets, requiring the commitment of

[23]Richard P. Hallion, *Storm Over Iraq: Air Power and the Gulf War* (Washington, D.C.: Smithsonian Institution Press, 1992), 143, 153.

[24]Peter Grier, "Aerospace World," *Air Force Magazine*, September 2001, 34.

[25]Representative of the two sides of this debate are Richard H. Shultz Jr. and Robert L. Pfaltzgraff Jr., eds., *The Future of Air Power in the Aftermath of the Gulf War* (Maxwell AFB, Ala.: Air University Press, 1992)—particularly John A. Warden III's essay "Employing Air Power in the Twenty-first Century," 57-82—and, on the ground side, Harry G. Summers Jr., *On Strategy II: A Critical Analysis of the Gulf War* (New York: Dell, 1992).

relatively little air power and no ground forces at all. Expressing the opposite view, ground advocates argued that only ground forces can take and hold territory, a requirement for controlling an adversary's actions, and thus air power's most important roles would continue to be interdiction and close air support. Similar controversies have existed throughout America's history, and the interservice component of this debate is not likely to be definitively resolved in the near future. However, based on the reality of military operations subsequent to Desert Storm, scholars outside the military have conceded an important point made in previous sections of this work, namely that air power has become increasingly important to American national security strategy. As one social scientist recently observed: "Air power projects force more rapidly and at less risk of life than land power and more formidably than naval power. These are valuable attributes for unpredictable crises that occur in places where the American public is unwilling to shed much blood."[26] Not surprisingly, virtually every military intervention since the Gulf War has begun with the question: Can air power alone do the job?

And, in the increasingly frequent military operations of the past decade, invariably air power has turned out to be either the singular, or the overwhelmingly predominant, force committed. This can hardly be seen as coincident—in essence, air power is frequently the only military instrument considered because of its perceived low risk. The acknowledged architect of the strategic air campaign in Desert Storm, Colonel John A. Warden III, theorized that a nation at war is a system of five concentric rings. In his

[26]Robert A. Pape, "The Limits of Precision-Guided Air Power," *Security Studies* 7, no. 2 (Winter 1997/98): 93; Pape ostensibly takes the middle ground in this debate, arguing that winning wars still requires destruction of enemy armies, but that air power may be able to do most of the work—however, his differentiation between "theater air power" and "strategic bombing" is an artificial contrivance that masks his proximity to the air power school. For a more detailed account of his views on coercive air strategies see Robert A. Pape, *Bombing to Win: Air Power and Coercion in War* (Ithaca, N.Y.: Cornell University Press, 1996).

postwar assessment, Warden concluded that precision weapons "made it possible to achieve maneuver, mass, and concentration on an entirely unprecedented scale... beginning with the most important central ring in Baghdad and working its way to the outermost ring of fielded forces."[27] However, conspicuously avoided in this and subsequent military operations was the fourth ring—the enemy's population. Under the old American way of war, generals regularly made war on civilians, the outstanding examples perhaps being William T. Sherman in Georgia and Curtis LeMay in Japan. That this approach to war has been forsaken, in and out of the military, is evidenced by Warden's observation that the victory in Iraq "satisfied the legitimate demands of the American people that their wars use technology to keep human losses—on both sides—to an absolute minimum."[28] This intolerance for loss of life has virtually guaranteed that recent and future U.S. military interventions consist principally of precision air strikes.

There are, of course, real risks involved in basing a national security policy on the standard of a bloodless use of force, and precision guided munitions, even with their unprecedented CEPs, have not always been able to avert friendly casualties or collateral damage. Ironically, the latter has often been a more real concern than the former. Although Saddam Hussein's military acumen has been disparaged by soldiers ranging from General H. Norman Schwarzkopf to frontline troops, he did, in reality, enter the war with a strategy for holding Kuwait. As he told April Glaspie, "Americans cannot stand

[27]Warden, "Employing Air Power," 78; by diagramming the enemy as an interdependent system of five concentric rings labeled (1) leadership, (2) key production, (3) infrastructure, (4) population, and (5) fielded military forces, Warden stressed the relative importance of each—for example, the military may be a shield for the whole system, but the leader in the middle is the entity with power to agree to change.

[28]Ibid., 57; at the risk of being categorized as a warmonger, the author of the current study challenges the unquestioned presumption of legitimacy of such demands as peculiarly the product of an affluent, secure society—those involved in violent struggles for national survival, past and current, would be unlikely to share Warden's acceptance of this premise.

10,000 dead," and he remained convinced that he could deter an American ground attack by realistically threatening this number of casualties.[29] Only after air power devastated his army with minimal losses did he realize that such a strategy could not succeed, and in mid-February sent foreign minister Tariq Aziz to Moscow to negotiate a withdrawal from Kuwait. Ironically, Iraqi—not American—casualties came closest to halting the war. Even though the Al Firdos command and control bunker seemed a justifiable military target, media revelations that its bombing on February 13, 1991 resulted in 400 civilian deaths generated a strong international reaction that shut down the bombing campaign against Baghdad for ten days. Clearly, Americans had become so accustomed to the pinpoint accuracy made possible by precision guided weapons that they balked at the first hint of civilian casualties.[30] One Air Force officer who participated in the bombing expressed his frustration over such unrealistic expectations in a letter home as follows:

> On the news lately the press have been making a big deal about that bunker that had those Iraqi civilians in it that our side bombed. The press really give me the beak! [infuriate me—flight crew vernacular] They are such simpletons. We do what we have to and if Iraqis get killed it is just unlucky. Did they think war was a joke when they started it?[31]

Despite such misgivings by those at greatest risk, a new American approach to war coalesced in the wake of the Cold War—one based upon the assumption that with technological capability came heightened moral obligation.

However, as this casualty-averse mentality was manifested more and more directly in the U.S. military operations of the 1990s, more serious misgivings surfaced, and at

---

[29]Pape, "Limits of Precision-Guided Air Power," 111-112.

[30]"Civilian Toll in Iraq Could Strain Alliance and Bring Pressure to Speed Ground War," *New York Times*, 14 February 1991, A1; Hallion, *Air Power Confronts an Unstable World*, 115.

[31]Scott C. Gillespie, Captain USAF, to Paul Gillespie, Taif, Saudi Arabia, 16 February 1991, Personal Files of author.

higher levels. Although resorting to use of the military instrument of national power more frequently than his immediate predecessors, President Clinton assiduously avoided casualties, making low-risk air strikes the hallmark of his national security policy. In several instances, military response came exclusively in the form of unmanned cruise missiles—the ultimate "risk-free" weapon. This policy culminated in the 1999 Allied Force operation to assist the beleaguered Moslem population of Kosovo—an eleven-week conflict that NATO won using air power alone, without a single allied life lost in combat operations. However, senior U.S. military sources expressed real concern following this lopsided victory, fearing that the harsh lessons of the air campaign might be lost in the exuberant headlines.[32] One oft-repeated concern was that, had Yugoslav President Slobodan Milosevic retaliated with greater vigor—for example, had the Serbs deployed their air defense system and inflicted major losses—the U.S. would have exhibited little staying power. Similarly, critics have noted that by signaling an intention from the start not to use NATO ground troops in any invasion of Kosovo, the U.S. gave President Milosevic a strong incentive to "play for time in sitting out the aerial bombardment in the hope that NATO unity would fragment."[33] Finally, summing up a major concern of all but the most ardent air power enthusiasts, Marine Corps General Anthony C. Zinni, commander of the adjacent U.S. Central Command, feared that the success of Allied Force had set the bar too high for future operations, since "expectations are so great now: zero casualties, perfect execution, completely flawless."[34] Such unrealistic expectations in the uncertain endeavor of warfare will act as a straitjacket.

---

[32]Nick Cook, "War of Extremes," *Jane's Defence Weekly* 32, no. 1 (7 July 1999): 21.
[33]Ibid.
[34]John A. Tirpak, "Kosovo Retrospective," *Air Force Magazine*, April 2000, 31.

In reality, Allied Force was far from casualty-free, and once again collateral damage nearly proved an operation's undoing. While public opinion seemed to take the estimated 5,000 to 10,000 Serbian military casualties in stride, errant precision weapons were another story altogether. Incredibly, one postwar estimate concluded that only twenty of 23,000 munitions dropped by NATO in the Kosovo campaign caused civilian casualties; an infinitesimal and historically unprecedented rate of less than one-tenth of one percent. However, even three targeting errors severely compromised the success of the campaign, given one was a crowded passenger train, one a Kosovar Albanian refugee column, and the third the Chinese embassy in Belgrade. No matter how accurate precision weapons become, they will never be failsafe. Precision guided munitions have failed in the past, and can certainly be expected to fail, and inflict unintended damage, in the future because operators, maintainers, intelligence, and technology itself simply cannot be perfect all the time. Air Force Lieutenant General Michael C. Short, the overall air commander of Allied Force, summed up the frustration of airmen shackled by a national security policy infatuated with precision air strikes, but intolerant of bombing imperfection, stating:

> Our politicians need to understand that this isn't going to be clean. There is going to be collateral damage. There will be unintended civilian casualties. We will do our level best to prevent both, but they've got to grit their teeth and stay with us. We can't cut and run the first time we hit the wrong end of a bridge. [Such response to scenes of unintended destruction] placed our kids at greater risk and made it more difficult to do our job.[35]

In the aftermath of Kosovo, the overwhelming sentiment within the military, at all levels, was a call to reexamine the myth of the surgical military operation—that erroneous belief by politicians that superior technology allows aggressors to be struck with absolute precision, with no risk other than that inherent in everyday military training exercises,

[35]Ibid., 33.

and with little or no danger to noncombatants. Reminiscent of earlier airmen frustrated by Desert Storm expectations, one Navy flyer observed: "Surgeons heal people; warriors kill them. Anyone who can't stomach that basic truth shouldn't play with weapons."[36]

Changing the Policy Paradigm

Having established that precision guided munitions do not, in fact, achieve bloodless results, the next logical line of inquiry is to determine what exactly they have achieved. In other words, have the results of recent military actions justified America's near-exclusive reliance upon precision air strikes, or have American policymakers perhaps overestimated what PGMs can accomplish for them strategically and politically? In order to measure the effectiveness of coercive air power, it is essential to differentiate between combat effectiveness, which concerns how well bombs destroy targets, and strategic effectiveness, or whether the destruction of target sets attains political goals.[37] Clearly, as technology has vastly improved bombing accuracy over the past three decades, the combat effectiveness of air power has likewise increased dramatically. As a result, the U.S. military can perform military missions much more quickly and cheaply than at any time in history. However, conducting military missions successfully and efficiently is no guarantor that desired political purposes will be achieved. Clearly, the success of coercive air strikes is dependent upon strategic effectiveness, and yet, because of the difficulties involved in translating military force into political outcomes, unequivocal success through precision air strikes has proven illusive.[38]

---

[36]J.J. Patterson VI, "Smart Bombs and Linear Thinking Over Yugoslavia," *U.S. Naval Institute Proceedings* 125, no. 6 (June 1999): 88.

[37]Pape, "Limits of Precision-Guided Air Power," 95.

[38]Ibid., 96.

The U.S. military's overwhelming reliance upon precision guidance technology in recent years has been predicated on the premise that it is possible to identify causal mechanisms by which destruction of a specific target set will, indeed, change the enemy's political calculations and force an abandonment of key interests. If true, the appeal of precision air strikes becomes obvious, since they allow an air force to achieve what militaries used to accomplish through attrition or annihilation, at a fraction of the cost and bloodshed. An examination of America's three largest military operations of recent decades—Linebacker in 1972, Desert Storm in 1991, and Allied Force in 1999—reveals not only an increasing reliance upon precision weapons, but evidence that air power has, in fact, been strategically effective in achieving political ends. In Vietnam, recently acquired precision guided munitions were clearly a major factor in thwarting the North Vietnamese Easter Offensive of 1972. However, of even greater significance, the successful Linebacker air campaigns arguably compelled the enemy to begin negotiating in earnest, allowing President Nixon to achieve his political goal of an American withdrawal that did not abandon the South to imminent Communist takeover.[39]

Similarly, the combat effectiveness of precision weapons in Iraq is rarely, if ever, disputed. Even the enemy generally acknowledged that air strikes substantially degraded their military capability without the indiscriminant carnage historically associated with aerial bombardment. For example, when asked how many of his soldiers had been killed by the air war, one Iraqi battalion commander told his Marine interrogator

> To be honest, for the amount of ordnance that was dropped, not very many. Only one soldier was killed and two were wounded. The soldier that was

[39]Mark Clodfelter, *The Limits of Air Power: The American Bombing of North Vietnam* (New York: The Free Press, 1989), 204.

> killed did not die as a result of a direct hit, but because the vibrations of the bomb caused a bunker to cave in on top of him.[40]

However, when further queried as to whether he then thought the aerial bombardment had been ineffective, this same commander responded emphatically "Oh no! Just the opposite! It was extremely effective! The planes hit only vehicles and equipment. Even my personal vehicle, a 'Waz,' was hit. They hit everything!"[41]

What has been increasingly disputed, particularly in light of Saddam Hussein's continued defiance, is the degree to which military victory translated to political success in the Persian Gulf. In the immediate aftermath of Desert Storm such doubts were scarce because the primary objectives of the air campaign—the isolation and incapacitation of the Iraqi political and military leadership, the destruction of weapons of mass destruction, the elimination of offensive military capabilities, and the forced ejection of the Iraqi army from Kuwait—had all been achieved on the cheap.[42] Of course, these objectives had been identified specifically as those most likely to force Iraq to abandon key interests, bringing renewed stability to the region. As one air power historian optimistically concluded, "at the end of the Gulf war, the ability of Iraq to threaten it neighbors was no less incapacitated than that of Japan and Germany in 1945, but Baghdad was intact. Its civilian population was virtually untouched directly by the war. Humane values had, in fact, prevailed."[43]

In the third and most recent instance of large-scale precision air strikes, the "bloodless" use of air power in Kosovo once again seemingly accomplished both the

---

[40]Hallion, *Air Power Confronts an Unstable World*, 121.

[41]Ibid.

[42]Richard H. Shultz Jr., "Compellence and the Role of Air Power as a Political Instrument," in Shultz and Pfaltzgraff, *The Future of Air* Power, 186; the term *compellence* was coined to denote the counterpart of deterrence in Thomas C. Schelling, *Arms and Influence* (New Haven: Yale University Press, 1966).

[43]Hallion, *Storm Over Iraq*, 263-64.

military and political objectives desired. Militarily, there is little room for debate, since President Milosevic acceded to NATO demands and withdrew his Serbian army from this southern Yugoslav province. And, while the attainment of political goals is less clear-cut, those who viewed NATO intervention primarily in humanitarian terms were well satisfied with the outcome. The current Air Force chief of staff summarized this viewpoint with his observation that in Allied Force, the Air Force "did something very profound. They saved hundreds of thousands of lives in Kosovo. Today whole families are alive who would otherwise have been brutally murdered."[44] Again, as in each of the preceding cases, politicians and policymakers clearly found precision air strikes a convenient means for using military force to achieve desired national security objectives.

Returning for a moment to Thomas Kuhn's paradigm model, it is apparent that precision guided munitions, in fact, precipitated a fundamental change in the way "normal" foreign and national security policy was conducted. In chapter 4, it was shown that Texas Instruments engineers encountered a paradigm of gyros and radio control that had resulted in unwieldy technologies whose growing complexity outpaced gains in precision. In order to create an effective bomb of unprecedented accuracy, the team led by Weldon Word departed radically from normal engineering practice and introduced a new, simpler paradigm. At another level, chapter 5 demonstrated that practitioners of air combat had similarly reached the practical limits of an existing paradigm during the Vietnam War, resulting in a technologically-intensive methodology of almost untenable complexity. However, the introduction of simple, reliable precision guided weapons in the late 1960s brought about a vastly simplified approach to air warfare that endures to

[44]Tirpak, "Kosovo Retrospective," 31.

the present. It is apparent from the current line of reasoning that, at yet another level, the universally recognized body of possibilities that had provided policymakers with defense solutions throughout the Cold War was somehow transcended as a result of the advent of precision guided munitions.

Viewed this way, it is not surprising that America has relied increasingly upon the military option generally, and precision air strikes specifically, in recent years. Because of the moral and political complications associated with nuclear weapons, employing the military instrument of national power during the Cold War came to be strictly governed by a complex system of rules and conventions, not unlike Ptolemy's astronomy of iterative epicycles. Consequently, despite vast technological advancements in the delivery, yield, and accuracy of nuclear payloads, within this paradigm such weapons became largely impotent, their use or threatened use serving chiefly to deter massive superpower aggression. The chain of technological innovations detailed in the early chapters of this work did more than culminate in a more accurate bomb. In essence, those involved changed the existing paradigm by constructing a bomb more potent than the A-bomb, at least in terms of practical military utility. Of course, the aforementioned changes at increasingly higher levels were not independent phenomena. Clearly, a change in the paradigm of those who created the technology (engineers) produced a consequent change for those who directly used that technology (military), which changed the playing field for those who relied upon it indirectly (government). Thus, as the technology of precision guidance became readily available in the past three decades, it rendered the use of military might much less complicated. The capability to precisely apply air power has led policymakers to a national security paradigm that increasingly

involves military intervention, but at the same time demands quick decisive victories with minimum casualties.

Although the analysis of current events is treacherous terrain for any historian, no post-September 11th dissertation on a national security topic would be complete without some discussion of the implications of the 2001 terrorist attacks against the United States. Although no real threat to the U.S. homeland was perceived after the fall of the Soviet Union, continual efforts to halt nuclear proliferation have underscored this country's determination to keep weapons of mass destruction out of the hands of terrorist organizations. Ironically, the weapon of choice used by terrorists to such devastating effect on "9/11" was not the much-feared man-portable atomic device, but rather a crude adaptation of commercial aviation technology into what amounted to manned precision guided munitions. America's experience with this latest threat to national security is relevant to the current work because it substantiates the claim that a new air-centric way of war has, indeed, come to dominate U.S. defense policy since the advent of precision weapons. The initial military response to this attack on the American homeland has demonstrated that, in all likelihood, precision air strikes will continue to dominate future conflicts, even when vital national interests are at stake.

That the American way of war, or war-fighting paradigm, had unmistakably transformed from the bloody, attrition-based approach of past wars to a casualty-averse air power dominated format was clear from the earliest responses to the terrorist attacks on U.S. cities. A mere twenty-seven days after hijacked airliners struck the World Trade Center and Pentagon, the U.S. had identified a culprit and lashed back with air strikes.[45]

[45]John A. Tirpak, "Enduring Freedom," *Air Force Magazine*, February 2002, 34.

However, even before the first blows of Operation Enduring Freedom were struck, public sentiment obviously favored a quick response from the air. Aptly characterizing the grass roots desire for reprisals, one widely-circulated Internet item humorously contemplated not the Marines of old storming an enemy stronghold, but overwhelming technology in the form of stealth fighters knocking at Osama bin Laden's door (Figure 26). Such an

FIGURE 26
Humorous Internet Posting Circulated Days After September 11th Attack

approach seemed naively optimistic given that both the al-Qaida terrorist network and the terrorist-friendly Taliban government were firmly entrenched in Afghanistan, a nation with few traditional infrastructure and military targets valuable enough to bomb.[46] For this reason, early press releases by President George W. Bush and top Defense Department officials warned that the war on terrorism would likely entail a long, costly commitment. However, when a military response was launched on October 7, it was

[46]Ibid., 32.

delivered by Air Force bombers and Navy carrier-based attack aircraft supporting small numbers of American special forces and more numerous indigenous Northern Alliance troops on the ground. As one prominent newspaper editorialized, "After September 11, President Bush promised that this would not be another bloodless, push-button war, but that is precisely what it has been."[47]

In fact, the objectives of Enduring Freedom's first phase were accomplished almost exclusively using precision air strikes. During the first two months of the operation, U.S. aircraft flew some 6,800 sorties, dropping approximately 18,000 bombs on Afghanistan. Speaking before the Senate Armed Services Committee, U.S. war commander General Tommy Franks stated that of these, some 10,000 were precision munitions, making it "the most accurate war ever fought in the nation's history."[48] As in Kosovo, the vast majority of weapons dropped were laser guided bombs and Global Positioning System satellite-aimed Joint Direct Attack Munitions. And, just as in the earlier operation, attention quickly focused on casualties.[49] Whether or not the American public could have stomached increased casualties with vital national interests so clearly at stake became a moot point when, in mid-December, organized resistance in Afghanistan virtually ceased.

An examination of the strategic roles assigned to air and ground forces in Enduring Freedom reveals an approach consistent with the precision-dominated national security policy of the past several decades. As in Iraq and Bosnia, a well-equipped ground force was inserted only after air strikes had largely neutralized enemy resistance. However, as

---

[47]Max Boot, editorial feature, *Wall Street Journal*, 14 November 2001, 44.

[48]"Review Suggests Taliban Inflated Afghan Civilian Death Toll," *Morning Call*, 12 February 2002, A3.

[49]Ibid.; see also "So Far, U.S. has Suffered No Deaths at Enemy Hands," *Los Angeles Times*, 24 November 2001, "Five Americans Injured in Battle for Fortress," *Morning Call*, 27 November 2001, and Tirpak, "Enduring Freedom," 35.

with previous operations, force protection—that is self-preservation—seemed to be the primary objective of Marines at the forward operating base near Kandahar.[50] In contrast, air power in Afghanistan held out the promise of a quick, decisive victory in the war against terrorism, in large measure by targeting key leaders individually. In fact, assassination by aerial attack is by no means a new concept. The earliest such attempt involved a Russian plan during the campaign of 1812 to construct a "huge, fish-shaped aerostat...capable of carrying men and large quantities of explosives" to be used, according to a contemporary witness, to "destroy Napoleon's general headquarters and, incidentally, the Emperor also."[51] In 1914, French General Joseph Joffre sent orders to Escadrille 114 to attack Kaiser Wilhelm's cortege as it left the town of Thielt, a mission later aborted when the Kaiser changed his plans, and American pilots successfully stalked and slew Japan's Admiral Isoroku Yamamoto, the architect of the Pearl Harbor attack, in 1943.[52] Despite laws forbidding such activity—most recently President Ronald Reagan's Executive Order 12333 signed December 4, 1981, stating that "no person employed by or acting on behalf of the United States government shall engage in, or conspire to engage in, assassination"—it is clear that exceptions have been made for cases that substitute a laser guided bomb for an assassin's bullet.[53]

---

[50]The often-heard criticism that force protection invariably becomes the main mission whenever ground forces are used is another symptom of America's casualty-averse approach to defense. A string of disasters in which unsuspecting American troops were massacred—including 239 Marines in Lebanon in 1983, 18 Army Rangers in Somalia in 1993, 19 airmen killed and hundreds wounded in the Saudi Arabian Khobar Towers bombing of 1996, and most recently the USS *Cole* attack in Yemen—have resulted in a military hierarchy and public unforgiving of the commander who fails to protect his troops from such harm.

[51]Frederick Stansbury Haydon, *Aeronautics in the Union and Confederate Armies: With a Survey of Military Aeronautics Prior to 1861* (Baltimore: The Johns Hopkins Press, 1941), 16.

[52]On the Kaiser and other World War I attempted assassinations, see Lee Kennett, *The First Air War: 1914-1918* (New York: The Free Press, 1991), 49-50; on Yamamoto, see Eliot A. Cohen, "The Mystique of U.S. Air Power," *Foreign Affairs* 73 (January/February 1994): 124.

[53]Richard Reeves, "Plan to Allow Official Assassinations is Work of a Fool and Unilateralists," Universal Press Syndicate, *Morning Call*, 2 May 2001, A15.

An adversary's leadership has long been recognized as a critical center of gravity; precise aerial bombardment simply introduced a more feasible means of attacking it. In explaining his five-ring model, in which the leadership ring is of central importance, John Warden acknowledged that "we always begin our thinking in the center; only at the center can a single input of energy (an entreaty from the president of the United States, or something physical like a bomb) result in a significant change in the system."[54] And, while Warden conceded that it would be a poor strategist who bet everything on the elimination of a single, central leader, this has not stopped the U.S. military from allocating some resources toward that end. For example, the choice of targets during the 1986 Libyan raid strongly indicates that Muammar Qaddafi was among the intended, or at least desired, recipients of a Paveway bomb. Following the Gulf War, U.S. officials repeatedly stated that no specific attempt to kill Saddam Hussein was made, but the reality is that considerable effort went into attempts to eliminate this nemesis. The first official admission of this controversial policy came from former British Prime Minister John Major, who acknowledged in a September 2001 interview that allied forces indeed tried to locate and kill the Iraqi leader with a bombing strike during the Gulf War.[55] Unofficial sources, namely U.S. aircrews, have privately admitted for years that short-notice attacks were launched against several high-level meetings Saddam was expected to attend, and the two 5,000-pound laser guided bombs rushed through development were, in fact, dropped on an underground bunker in which Saddam was suspected of hiding.[56]

---

[54]John A. Warden III, "Success in Modern War: A Response to Robert Pape's *Bombing to Win*," *Security Studies* 7, no. 2 (Winter 1997/98): 175.

[55]"Ex-British Leader: Allies Tried to Kill Saddam," *Morning Call*, 28 September 2001, A2.

[56]Scott C. Gillespie, "Desert Shield/Desert Storm Memories," Speech to the Order of Daedalians, Flight 17—Albuquerque, N. Mex., 19 April 2001, Personal Files of author.

Indications that key leaders would be targeted for aerial execution in the war on terrorism emerged even before the commencement of air strikes. In response to media questions regarding the applicability of past executive orders banning assassination of foreign leaders, Bush administration officials asserted that such orders do not apply in cases of self-defense, clearing the way to specifically target Osama bin Laden, Taliban leader Mullah Mohammad Omar, and other terrorist leaders in Afghanistan.[57] The extent to which resources have been channeled toward this particular mission are largely speculative at this early stage, but the employment of specialized technology clearly indicates that elimination of key leaders is, in fact, a top priority. For example, military researchers rushed a new thermobaric bomb to completion in the weeks following the September 11th terrorist attacks. By creating a cloud of explosive particles, this weapon produces a shock wave that is amplified in enclosed spaces—optimal for killing the enemy throughout an entire cave or tunnel complex, without collapsing the structure itself. Precisely guided to an entrance using lasers or GPS satellites, this new bomb, designated BLU-118B, is a true breakthrough for U.S. officials eager to determine which leaders of the Islamic militia and terrorist network have been killed by U.S. air strikes.[58] Even more revealing has been the use of pilotless aircraft, some operated by the Central Intelligence Agency independent of the military chain of command, in the hunt for terrorist leaders in Afghanistan. On February 4, 2002, the CIA used an unmanned Predator, modified to carry two Hellfire laser guided missiles, to attack a meeting of suspected al-Qaida leaders (Figure 27). The primary intended target of this attack can be inferred from the U.S. government's intensified efforts to acquire DNA samples from

[57]"Ex-British Leader: Allies Tried to Kill Saddam," *Morning Call*, 28 September 2001, A2.
[58]Matt Kelley, "New Bomb Created to Blast Caves," *Morning Call*, 22 December 2001, A1.

Osama bin Laden's family immediately following the controversial CIA attack.[59] Not surprisingly, given a national security policy that now emphasizes the bloodless use of force, the war on terrorism has both selectively targeted senior enemy leadership, and relied heavily upon precision guided munitions to accomplish this, and other, missions.

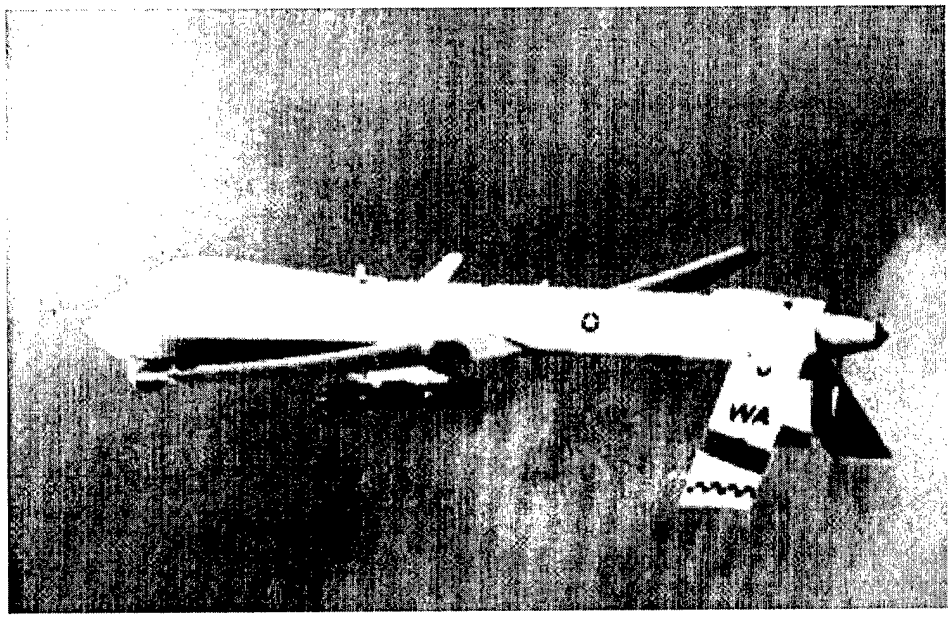

FIGURE 27
Predator Pilotless Aircraft Armed with Hellfire Laser Guided Missile

In fact, all indications since the terrorist attacks of 2001 indicate that American policymakers still believe that precision air strikes are the most effective military means of obtaining important political objectives. Once expected to call for sweeping changes in the size and scope of U.S. military forces and weaponry, the post-"9/11" Quadrennial Defense Review avoided such major moves. Submitted to Congress on September 30, 2001, the latest QDR declared defense of the U.S. homeland to be the military's top

[59]Robert Burns, "CIA Drones Spied on Afghans Before U.S. Military Arrived," *Morning Call*, 13 February 2002, A7; John J. Lumpkin, "U.S. Seeks DNA Samples from bin Laden's Family," *Morning Call*, 28 February 2002, A1.

priority, abandoned the strategy of maintaining a force capable of winning two simultaneous major theater wars as expected, and identified long-range precision-strike systems as "perhaps the most important transformational capability on the horizon."[60] As a reflection of national security priorities, this document clearly indicates that precision air power will continue to dominate America's use of military might for the foreseeable future. And, while the events of "9/11" and subsequent operations in Afghanistan indicate that Americans will, in fact, accept casualties—especially enemy losses—when vital national interests are at stake, they also demonstrate an ongoing pattern of reliance upon the technology of precision guided weapons, and a continued reluctance to shed blood needlessly when the perception is that guided bombs will suffice.

In summarizing the effect of precision weapons on national security policy, it is clear that causation has been somewhat circular. During the Cold War, significant changes to national security policy and air power doctrine led to the development of pinpoint bombing, but the resulting new technology brought about a dramatically altered national security policy. How well this shift, and the underlying technology, has served the U.S. is a more difficult question to answer. From the numerous examples above—Vietnam, Iraq, Kosovo, and beyond—one might well conclude that precision air strikes have most definitely succeeded in achieving stated military and political goals at minimal cost. For those who share this point of view, the logical extension is a weapon so precise and risk-free that there are virtually no limits to its use. Examples that such a vision exists for the future of precision guided munitions abound. One study in the late 1990s concluded that the U.S. could effectively deter terrorism using such weapons; a second envisioned the

[60]John A. Tirpak, "The QDR Goes to War," *Air Force Magazine*, December 2001, 26.

laser guided soft and lightweight sticky foam bomb already mentioned; and a third asserted that it is now possible to forecast in advance how many precision weapons will be needed to defeat a given enemy.[61] Such studies clearly epitomize the powerful attraction of this potent class of weapons, with its promise of low-cost, often bloodless, solutions to a variety of previously insoluble foreign relations problems. It is, however, entirely possible that such optimistic claims have induced policymakers to overestimate what precision air strikes can accomplish—a possibility that will be treated in the final chapter.

[61]Roger F. Seidel, *Preemption and Retribution: Precision-Guided Munitions to Counter Terrorist Threats* (Carlisle, Pa.: U.S. Army War College, 1998), 20; Hallion, *Air Power Confronts an Unstable World*, 124; John A. Warden III, "Air Theory for the 21st Century," *Military Studies* (Maxwell Air Force Base, Ala.: Air Command and Staff College, 1998), 553.

8. – Conclusion

An underlying premise of this account has been that America's conscious effort to construct the technologies necessary to achieve precision guidance was a reflection of societal values. The horrific bloodletting in Europe during World War I created a strong demand for technologies that might offset the tremendous advantage then enjoyed by defending armies. While aerial bombardment emerged during that conflict as a promising means of lowering the risks faced by attackers, this nascent technology suffered from numerous shortcomings—aircraft were small and fragile, pilots were expensive to train and replace, and, most problematic of all, bombs were difficult to aim. Even when technological developments and mass production techniques made large-scale strategic bombing a reality in World War II, the promise of decisive victory through air power remained elusive until the emergence of atomic weapons in 1945. Of course, once America lost its nuclear monopoly, wars had to be fought very carefully, and additional technologies were pursued to allow the achievement of limited objectives under a nuclear umbrella. However, in Korea and, especially, Vietnam, it became apparent that U.S. public commitment was difficult to sustain in limited war, particularly when casualties were high and no end of war was in sight. The development of effective precision guided munitions in the 1960s satisfied the purposes of American society by allowing it to employ its military under the nuclear umbrella, while at the same time limiting casualties.

On one level, therefore, the preceding narrative has been a detailed description of where the technology of precision guidance originated, and how the U.S. arrived at the present state of the art in precision guided munitions. It has not been the story of heroic inventors, although it is impossible to conceive of the emergence of this groundbreaking

class of weapons without the significant contributions of a core of key individuals—extraordinary in their involvement, but in most other regards ordinary people. Nor has it been the story of an accidental or fortuitous technological breakthrough. Rather, this account has clearly documented the evolutionary process by which a highly sought-after technological capability was, over the course of half a century or more, transformed from the implausible to the impractical, before finally becoming feasible, useful, and today, nearly ubiquitous. And, while the argument has not been made that such a model can explain all emerging technology, the magnitude of the changes brought about by precision guidance technology, both to war-fighting strategy and larger national security issues, renders this study far more significant than a mere case study.

In claiming that the creation of precision weapons conformed to George Basalla's theory of technological evolution, it has been clearly demonstrated that the laser guided bomb, a novel artifact of enormous importance, arose not only from antecedent artifacts, but benefited from an increasingly specialized engineering practice.[1] For this reason, early research on precision guidance, from Elmer Sperry and Charles F. Kettering's aerial torpedoes, to the National Defense Research Committee's innovative guided missile projects of World War II, through the burgeoning string of postwar innovations—Tarzon, Lacrosse, Bullpup, and so forth—was inextricably linked to the eventual development of effective, useful precision weapons. Even more significant, however, was the emergence of important technological innovations that were not directly developed for precision guidance. Transforming the Azon radio-controlled bomb of the mid-1940s into an effective weapon that the U.S. military would consider useful enough to adopt was not

[1]George Basalla, *The Evolution of Technology* (Cambridge: Cambridge University Press, 1988), 45.

merely a matter of applying, or even incrementally improving, existing guided weapons technology. Clearly, bottlenecks existed prior to the 1960s that limited the technological progress possible in this area. Two critical technological innovations, the laser and the semiconductor integrated circuit, emerged concurrently in the late 1950s, and contributed significantly to the removal of those bottlenecks. In a very real sense, the non-intuitively obvious integration of these unrelated technological antecedents brought about a radical new approach to guided aerial weapons—one that proved more accurate, more affordable, and more useful than all previous attempts.

Thus, while this study has argued that no less than four contributing factors were necessary for the "invention" of precision guided munitions—namely national security policy, military doctrine, wartime exigencies, and technological antecedents conducive to the creation of this particular military technology—it is clear that available technology was the limiting factor for several decades. Lacking the appropriate technologies to achieve consistent, reliable precision bombing, would-be inventors developed the fascinating array of aerial guided weapons described in the early chapters of this work. However, while many of these early weapons achieved a degree of success, and virtually all helped define or solve ongoing problems involved with precision guidance, none actually delivered a capability superior to existing unguided bombing. In a very real way, the technology for precisely guided bombardment became feasible only after the advent of laser, semiconductor, and other constituent technologies. Consequently, the inventive genius of one or two individuals was not primarily responsible for this novel technological capability—rather it was built up over time through the accumulation of antecedent technologies, networks, and specialization.

For this reason, it would be impossible to isolate a single inventor of precision guided munitions, even if it were possible to identify the first such weapon—some premiere device that might constitute what has traditionally been identified as an original "invention." For example, to confer "inventor" status upon Kettering or another of the early guided bomb pioneers would signify that, in the case of new technology, conceptualization constitutes creation. This is hardly a defensible position, for clearly Leonardo da Vinci, Jules Verne, and other creative minds have conceptualized fantastic technological innovations that were well beyond the technical capabilities of their day. As a result, the actual creation, or invention, of such artifacts did not occur until the evolution of technology brought about the requisite capabilities. However, as important as were the antecedent component technologies and built-up engineering expertise already mentioned, the role of individual innovators cannot be ignored in the story of the creation of precision guidance technology. For this reason, the significant contributions of a handful of individuals have formed an integral part of this story. Arguably, some of the most significant actors in this narrative were not the generals and presidents commonly associated with the wars of the twentieth century, but rather the engineers and practitioners—David Salonimer, Weldon Word, Dick Johnson, Joe Davis, and so forth—who not only envisioned a technological solution to a longstanding problem, but found a way to create that technology in a form that proved to be of practical utility.

Just as certain individuals have been highlighted, various key technologies have likewise been singled out, or privileged, in this account. The laser guided bomb developed by Texas Instruments in the mid-1960s began, as had innumerable predecessors, as yet another attempt to improve bombing accuracy. However, a variety

of factors, including stringent time and budget constraints, induced TI designers to not only pursue the promising technique of semiactive laser guidance, but to abandon the accepted practice of gyroscopic stabilization in favor of a radical, simplistic alternative. The resulting Paveway weapon system, with its innovative birdie head seeker and four-quadrant silicon detector, obviously represented a significant engineering breakthrough. For reasons clearly outlined in the foregoing narrative and analysis, the Paveway laser guided bomb can best be described as revolutionary—a clear-cut example of a technology whose development came about only after an existing paradigm was significantly changed. Initial testing, in Florida beginning in 1966, and in Southeast Asia in 1968, clearly demonstrated that laser guidance was a reliable, cost-effective technology that consistently achieved pinpoint accuracy—something earlier attempts at precision had promised, but never quite delivered.

The technology that made Paveway possible is interesting in its own right, but the subsequent application of this technology has proven even more revolutionary.[2] Although pinpoint bombing became a reality in the midst of the Vietnam War, the tremendous impact Paveway weapons would have on war fighting did not become apparent immediately. Several factors, including the bombing halt in North Vietnam, the growing diversity of competing weapon technologies, and the military's traditional conservatism, contributed to the relatively slow adoption of such weapons. However, this new generation of precision guided weapons came of age in a remarkable, highly-visible manner during the Linebacker air campaigns of 1972. The existence of precision weapons literally made new choices possible, allowing the U.S. to quickly crush North

[2]Here again, the hackneyed term *revolutionary* is used in the Kuhnian sense—see Thomas S. Kuhn, *The Structure of Scientific Revolutions*, 1962, 2nd ed. (Chicago: University of Chicago Press, 1970), viii, 10.

Vietnam's massive Easter Offensive without recommitting ground troops. In the decades following Vietnam, it became obvious that PGMs had fundamentally altered the American way of war. Just as the introduction of gunpowder in the 1400s, and nuclear weapons in the 1940s produced revolutionary changes in the Western war-fighting paradigm, so too the appearance of precision guided munitions has profoundly changed the way the U.S. military prepares for and prosecutes war. The nuclear arsenal that once formed the mainstay of national defense has been largely supplanted by the less restrictive, and hence, more potent, precision air weapon. The result has been a marked shift in emphasis away from mass destruction, leading to the precise infliction of damage and the calculated avoidance of bloodshed.

Policy Implications and Possible Limitations

Defense experts have largely accepted the notion that precision guided munitions, together with several important enabling technologies, have produced a revolution in military affairs. One manifestation of this technologically induced shift has been a radical change in the way war is fought. In short, precision air strikes now offer a viable alternative to attrition and annihilation as the means to compel an enemy's behavior.[3] While it is not yet clear whether America is more or less secure using this new approach to warfare, policymakers have seized upon precision guided munitions as the key to more humane war. In fact, precision weapons have diminished the horror of war in two important respects, both lessening the risk to friendly forces by decreasing the number

[3]David A. Deptula, "Firing for Effect: Change in the Nature of Warfare," *Aerospace Operations* (Maxwell Air Force Base, Ala.: Air Command and Staff College, 1998), 137; Deptula uses the term "parallel war" to describe this radical new war-fighting paradigm.

and exposure of attackers required to go into harm's way, and minimizing the collateral damage inflicted upon an enemy. As one recent policy study concluded:

> Unlike other high-tech armaments (e.g. nuclear weapons) that provide military advantages but political liabilities, PGMs uniquely seem to offer both military efficiency and an unparalleled opportunity to seize the moral high ground so conducive to maintaining the necessary public support for military operations.[4]

This point has obviously not been lost on U.S. policymakers. Over the past decade America has crafted a national security policy that, once again, changed an existing paradigm. By shifting away from both nuclear and ground attack, this new approach has created viable military solutions to previously intractable foreign relations problems.

Thus, at a deeper level, this work has been an attempt to go beyond the historical narrative in order to explore the implications of an important technology to the society that clearly selected and pursued it ahead of others. As this dissertation's subtitle implies, precision weapons did not simply emerge as the product of unchecked technological evolution, but were consciously constructed in response to the purposes, ethics, and values of society. Obviously, the trend toward greater and greater reliance upon this class of weapons is symptomatic of a society that both believes better technology will win wars, and is committed to conducting warfare as humanely as possible.[5] In fact, it has been observed that, historically, the greatest strength of U.S. fighting forces has always been the exploitation of peculiarly American qualities and attributes. Stated more succinctly, "We are a rich, industrial, urban country. Highly technical forces are

---

[4]Charles J. Dunlap Jr., *Technology and the 21st Century Battlefield: Recomplicating Moral Life for the Statesman and Soldier* (Carlisle, Pa.: Strategic Studies Institute, 1999), 5.

[5]George Raudzens, "War-Winning Weapons: The Measurement of Technological Determinism in Military History," *Journal of Military History*, October 1990, 433; Raudzens concludes that, in fact, war is little susceptible to new technology.

compatible with our characteristics and resources."[6] Given America's long tradition of technological idealism, it should come as no surprise that such technologies—weapons variously described as "ultimate," "decisive," and "war winning" in this work—have been vigorously pursued and routinely constructed.

What made the class of weapons collectively known as precision guided munitions a standout technology, even for a technophilic American society, was the associated promise of conducting warfare not only more decisively, but also more humanely. Over the past two decades, in operations ranging from Libya, to Iraq, to the Balkans and Afghanistan, the U.S. has consistently relied almost exclusively upon precision air power in order to achieve desired military and political objectives while avoiding needless bloodshed. The apparent success of each intervention has led to increased faith in this approach to national security, to the point where, in the wake of Desert Storm, it appears as if the American way of war can be summed up in six words: "Quick decisive victories with minimum casualties."[7] Clearly, the national security policy of the past several decades has embraced the "humane" military option made possible by precision weapons as a viable and increasingly popular response. However, an old truism dictates that when something appears too good to be true, it usually is. This work has, therefore, included a healthy skepticism of the more exuberant claims as to what modern air power can, in fact, accomplish. As one military historian recently concluded, "the illusion of a 'bloodless

[6]Loren Baritz, *Backfire: A History of How American Culture Led Us into Vietnam and Made Us Fight the Way We Did* (New York: William Morrow and Co., Inc., 1985), 275.

[7]Tony Kern, Paul G. Gillespie, et al, eds., *Forged by Fire: Military History for the Profession of Arms* (Needham Heights, Mass.: Simon and Schuster Custom Publishing, 1998), xiv.

war' is false...history tells me that warfare is violent, confusing, and bloody. Ninety days in the sandbox with an inferior and blind enemy does little to alter the long view."[8]

Returning briefly to the recent examples of successful precision air strikes detailed in the previous chapter, namely Vietnam, Iraq, Kosovo, and Afghanistan, there are strong indications that policymakers have, in fact, overestimated what PGMs have been able to accomplish politically. For example, a few thousand well-placed laser guided bombs in 1972 almost certainly thwarted North Vietnam's Spring Offensive and arguably accelerated an end to hostilities by coercing recalcitrant northern representatives back to the bargaining table. It is, therefore, quite correct to conclude that accurate bombs allowed President Nixon to achieve his political goal of an American withdrawal that did not abandon the South to imminent Communist takeover. Ultimately, however, bombing failed to achieve the original political results desired by American civilian and military leaders, chief among them a stable, independent, non-communist South Vietnam. Thus, despite the development of a technology capable of circular error probables in the twenty-foot range, what was once Saigon is today Ho Chi Minh City.[9]

Similarly, the Desert Storm air campaign of 1991 arguably achieved desired physical effects without necessarily accomplishing long-term strategic and political objectives. To be sure, the primary objectives of an isolated and incapacitated Iraqi political and military leadership, the eradication of weapons of mass destruction, the elimination of offensive military capabilities, and the forced ejection of the Iraqi army from Kuwait appeared to have been purchased at an astonishingly low cost in the aftermath of the Gulf War. Yet,

---

[8]Ibid.

[9]Mark Clodfelter, *The Limits of Air Power: The American Bombing of North Vietnam* (New York: The Free Press, 1989), 203.

a decade after hostilities ceased, it is clear that Iraq still poses a credible threat to U.S. national security. Left in power by the terms of the armistice, Saddam Hussein savagely crushed internal uprisings by Shiite Muslims in the south and Kurds in the north, in the months following the war. In the intervening years, he has reemerged as a dangerous power in the Middle East, his isolation weakening and his weapons programs progressing thanks in large part to revenue from oil sold under a United Nations-supervised program intended to ease the effects of sanctions on Iraqi civilians. Iraq now routinely fires on coalition aircraft enforcing U.N. resolutions in the no-fly zones, and as recently as January 2002, U.S. fighter aircraft resorted once again to precision guided munitions against Iraqi air defense sites after the Iraqi military directed gunfire and targeting radar at coalition aircraft.[10] What once looked like a quick, humane victory is beginning to appear more and more like, at best, the abeyance of ongoing hostilities.

Even the highly-touted, "casualty-free" use of air power in Kosovo, in 1999, left behind a mixed legacy. While the withdrawal of the Serbian army from this province ostensibly saved hundreds of thousands of lives, top military officials could not agree on the overall success of Operation Allied Force. For example, Lieutenant General Michael Short, the overall air commander for this operation, conceded that NATO achieved its primary objectives in Kosovo, but lamented "It's not clear if we won, because the desired end state has never been articulated."[11] An even stronger indication that the bombing campaign failed to achieve its intended political goals surfaced exactly one year after

[10]Most recent U.S. attacks on Iraq took place on 21, 23, and 24 January 2002—Suzann Chapman, "Iraq Continues to Engage Coalition Aircraft," *Air Force Magazine*, March 2002, 12; see also Donna Bryson, "Would Times be Different Now if Saddam had been War Target?" *Morning Call*, 18 January 2001, A8.

[11]John A. Tirpak, "Kosovo Retrospective," *Air Force Magazine*, April 2000, 33.

Allied Force ended, as international officials censured Kosovo's ethnic Albanians for "becoming the oppressors of their former Serb tormentors and using the same 'disgusting tactics' that were once used against them."[12] The following week, NATO peacekeepers launched a major raid on Albanian strongholds, seizing large quantities of weapons and ammunition. America now finds itself in the awkward and unenviable position of having fought at one time on virtually every side of the messy, ethnic conflict in the Balkans. America's attempt to slice through this Gordian knot using PGMs has proven neither as straightforward, nor as successful as Alexander the Great's parallel undertaking.[13]

The implications for the ongoing counterterrorism campaign are not altogether encouraging, even though there are a host of signs indicating the current threat to national security differs markedly from previous crises. For example, this adversary has demonstrated a predilection for ruthlessly striking America's homeland, and, as a non-state entity, provides few identifiable centers of gravity against which to retaliate. Given the unique aspects of the current conflict, one might expect to see a reevaluation of the air-centric military strategy and national security policy that has evolved from past conflicts. In fact, early indicators were that special operations forces, not air forces, would fight much of the war on terrorism. After all, special operations forces exist precisely because "conventional means of attack may not only be ineffective, they may be counterproductive against opponents who are unafraid to sacrifice their lives for their beliefs, who are unconstrained by international law or treaty and the law of armed conflict, and who are not subject to swift surgical strikes because they are interspersed

---

[12]George Jahn, "Serbs Now the Victims, Report Finds," *Morning Call*, 10 June 2000, A12; see also "Peacekeepers Launch Arms Search in Kosovo," *Morning Call*, 16 June 2000, A2.

[13]The allusion is, of course, to the intricate knot tied by King Gordius of Phrygia, and cut by Alexander after hearing an oracle foretell that whoever could undo it would be the next ruler of Asia.

among noncombatants.[14] However, it is now obvious that the current war is being fought within the existing paradigm, relying as heavily as ever upon the U.S. arsenal of precision weapons. In justifying a $48 billion increase to the 2003 defense budget, President Bush recently stated "Afghanistan proved that expensive precision weapons defeat the enemy and spare innocent lives, and we need more of them."[15] Clearly, policymakers at the highest levels have accepted the premise that newer and better precision weapons in ever-increasing numbers will continue to deliver desired political results, and do it with a minimum of casualties and risk.

The existing national security policy is problematic, however, not only because it ignores the ambiguous long-term results of recent conflicts detailed above, but because such an anemic, casualty-averse policy is unlikely to deter or defeat the determined, resourceful foe of future conflicts. Nevertheless, the intent of this study has not been to advocate the replacement of air power by ground forces. If anything, it has demonstrated that PGMs have, in fact, achieved valuable military objectives with reduced casualties on all sides. Rather, it has been an attempt to demonstrate that defense strategy and policy should not be carelessly slaved to current technology; a clear illustration that technology best serves those who thoughtfully implement it. Historians have frequently personified technology as the Greek Titan Prometheus, because in mythology he brought fire down from heaven and tutored mortals in the practical arts and applied sciences. Ironically, the name Prometheus itself means literally "Forethinker," making the Promethean metaphor an apt one with which to conclude this study. Now that the American homeland has,

---

[14]"Special Operations in Peace and War—United States Special Operation Command Publication 1," *Operational Forces* (Maxwell Air Force Base, Ala.: Air Command and Staff College, 1996), 327-328.

[15]Suzann Chapman, "Aerospace World," *Air Force Magazine*, March 2002, 12.

itself, been violated, attention has been sharply focused on recent, current, and future national security. History, and in particular this historical account, has much to offer those who would think about how technology might best enhance security.

For the U.S. military, the lesson to be learned from the historical use of air strikes is that there are limits not only to air power, but to military force generally. In each of the recent operations cited above, target sets were effectively destroyed and primary military objectives achieved, but political purposes were frustrated in the long term. Military leaders and war planners need to admit more freely the difficulty involved in identifying causal mechanisms that will have a desired political effect on an adversary, especially when leadership, military forces, and territory are left intact. The purpose of warfare is to get one's enemy to stop resisting, and the role of violence in warfare is specifically to convince the survivors to quit. However, what will be required to convince a government and its people to give up is not always obvious—after all, unless one is willing to kill every last enemy, defeat is largely a psychological condition. While there is no guarantee that a more total commitment, including costly ground invasions, would be more effective, it is difficult to imagine a defiant Saddam Hussein or Slobodan Milosevic sans territory and resources. Reflecting the melancholy seventeenth-century pragmatism of Thomas Hobbes, one recent policy study captured the essence of this lesson, bluntly observing that: "violent social conflict...is brutish, and superficial responses do not produce lasting solutions."[16] Although precision technology has, and will no doubt continue to contribute invaluable war-fighting capabilities, the strategy and doctrine of the U.S. military services must reflect this grim reality.

---

[16]Glynne Evans, "Responding to Crises in the African Great Lakes," *National and International Security Studies* (Maxwell Air Force Base, Ala.: Air Command and Staff College, 1997), 338.

In a larger sense, the U.S. military is merely the servant of elected government, and policymakers must also realize that history can and should inform decisions regarding the future use of technology. If one lesson can be learned from the current study, it is that politicians need to get better at ascertaining which political goals can be accomplished using the military option generally, and precision air strikes specifically. Historically, America has prided itself on the ability to unilaterally ensure its own national security. The tendency toward isolationism, the development of advanced weaponry, and, most recently, the proposed strategic defense initiative are all manifestations of this brand of foreign policy. In recent decades, the emergence of precision guided weapons has given American presidents an unprecedented capability to act unilaterally. The perception has been that this technological fix can effectively replace the tedious, drawn out political process in which the U.S. may not always get its way. The reality is that PGMs do achieve military objectives, and may achieve short-term solutions to problems, but have also exacerbated longer-term political problems.

American leaders have been "vouchsafed with a military instrument of a potency rarely known in the history of war," and yet it has been largely squandered in the pursuit of national interests of questionable vitality.[17] This work has demonstrated that recent U.S. military operations often left an unresolved political problem in need of political settlements, and yet policymakers continue to be charmed by the promise of surgical, risk-free air strikes. Following the Persian Gulf War, one analyst warned that air power is unusually seductive because, "like modern courtship, it appears to offer the pleasures

[17]Eliot A. Cohen, "The Mystique of U.S. Air Power," *Foreign Affairs* (January/February 1994): 124.

of gratification without the burdens of commitment."[18] With vital national interests unquestionably at stake as America enters a new millennium, certainly precision technology represents a valuable and potent component of future national security. However, in pursuing national security objectives, decision makers must not lose sight of the simple and brutal fact, epitomized by William T. Sherman's 1864 march through Georgia, that force works by destroying and killing. The use of air power is bound to offend many, no matter what precautions are taken to avoid loss of life. Future leaders tempted to view air power as "a shining sword, effortlessly wielded, that can create and preserve a just and peaceful world order," would be well advised to temper such enthusiasm with a modicum of General Sherman's gloomy wisdom.[19] At the end of the day, unilateral force is still a poor substitute for international politics.

Finally, in a society as technologically dependent as America's, it should now be clear just how perilous it can be to let available technology determine policy, instead of the other way around. Knowing that the air force he helped create would, of necessity, perpetually worship at the altar of technology, General Henry "Hap" Arnold prudently warned against just such a mistake in priorities, ominously noting that:

> National safety would be endangered by an air force whose doctrine and techniques are tied solely to the equipment and processes of the moment. Present equipment is but a step in progress, and any air force which does not keep its doctrine ahead of its equipment, and its vision far into the future, can only delude the nation into a false sense of security.[20]

---

[18]Thomas A. Keaney and Eliot A. Cohen, *Revolution in Warfare?: Air Power in the Persian Gulf* (Annapolis, Md.: Naval Institute Press, 1995), 213.

[19]Ibid., 226.

[20]Air Defense Command, "Air Intelligence Reports," 1 January 1947, AFHRA, Maxwell AFB, Ala., file number 410.608, 20.

This declaration reflects a clear understanding of the fact, born out by centuries of warfare, that military advantages, particularly those created through superior technology, have inevitably been limited either by the diffusion of techniques or the development of counter tactics. If the conscious construction of the potent military technology of precision guided munitions is be of Promethean value, its role in national security needs to be reassessed. Before resorting to the military instrument of national power, policymakers need to consider more than merely how precision air strikes might achieve military objectives at minimum risk. They need to thoroughly think through who it is they are trying to persuade, and how much violence they are willing to perpetrate in order to achieve their overall objective. This work has described a technology whose potency and inherent flexibility will undoubtedly facilitate the exercise of violence well into the future. However, it has also shown that answering such questions is tricky, and requires a high level of political intelligence in addition to military capabilities.

BIBLIOGRAPHY

PRIMARY SOURCES:

Air Force Historical Research Agency, Maxwell Air Force Base, Montgomery, Ala. (Cited as AFHRA, referenced by file number.)

Air Proving Ground Command. "Combat Employment of Tarzon and Razon Guided Missiles." 31 August 1951, AFHRA file number K240.01.

Air Proving Ground Command. "Drone Activities at the Air Proving Ground Command." December 1951, AFHRA file number K240.01.

Air Proving Ground Command. "History of 1st Experimental Guided Missiles Group." 1 July 1948 to 30 June 1949, AFRHA file number GP-MI-1-HI.

Air Proving Ground Command. "Interim Report on Air Proving Ground and Other Experimental Activities in Support of Korean Operations." 5 September 1951, AFHRA file number K240.04B.

Headquarters 19th Bombardment Group. "Combat Employment of Tarzon and Razon Guided Missiles—Final Activity Report." 31 August 1951, AFHRA file number K240.01.

U.S. Air Force Historical Archives. "End of Tour Report—Colonel Larry M. Killpack." 21 May 1971, AFHRA file number K717.131.

U.S. Air Force Historical Archives. "Oral History Interview—Captain Mark D. Kimball." 10 July 1970, AFHRA file number K239.0512-384.

U.S. Air Force Historical Division. *United States Air Force Operations in the Korean Conflict, 1 November 1950 - 30 June 1952.* 1 July 1955, AFHRA file number 101-72.

U.S. Air Force Museum. "Kettering Bug Exhibit." 14 March 1964, AFHRA file number K289.9201-1.

U.S. Army Air Corps Board. "Study No. 9—Radio Controlled Aircraft." 25 October 1935, AFHRA file number 167.5-9.

U.S. Army Air Corps Chief. B. D. Foulois to Adjutant General, "Development of Radio Controlled Airplanes." 6 May 1935, AFHRA file number 167.5-9.

U.S. Army Air Corps Materiel Division. A.W. Robins to Chief of the Air Corps, "Development of Radio Controlled Airplanes." 31 May 1935, AFHRA, file number 167.5-9.

U.S. Army Air Defense Command. "Air Intelligence Reports." 1 January 1947, AFHRA, file number 410.608.

U.S. Army Experimental Engineering Section. "The Kettering Aerial Torpedo." 19 May 1927, AFHRA file number MICFILM 43794.

U.S. Department of Defense, Joint Chiefs of Staff. "Response to UK Request for Paveway II Bombs." 24 February 1991, AFHRA file number CSS-4-31.

Air Force History Support Office, Bolling Air Force Base, Washington, D.C. (Cited as AFHSO, referenced by file number.)

Headquarters 3rd Bombardment Division. "Observations on Bombing Results in Paris Area." 18 September 1944, AFHSO file number B5533-434.

Headquarters 3rd Bombardment Division. "Plan for Completion of Caster Project." 12 October 1944, AFHSO file number B5529-1015.

Headquarters 3rd Bombardment Division. "Report on Aphrodite Project." 20 January 1945, AFHSO file number B5529-1015.

Headquarters 388th Bombardment Group. "Intelligence Report—Aphrodite Mission No. 3." 12 August 1944, AFHSO file number B5530-351.

Headquarters 7th Air Force. "An Analysis of Laser Guided Bombs in Southeast Asia – Air Operations Report 73/4." 28 June 1973, AFHSO file number K7640-245.

Headquarters 7th Air Force. "Pave Way Utility and Cost Effectiveness in Southeast Asia." 15 September 1968, AFHSO file number K7725-506.

Headquarters Pacific Air Forces. "The Air War in Vietnam: 1968-1969." 1 April 1970, AFHSO file number CHECO-K717.0413-75.

Headquarters Pacific Air Forces. "Second Generation Weaponry in Southeast Asia." 10 September 1970, AFHSO file number CHECO-K717.0413-80.

Headquarters Pacific Air Forces. "Linebacker: Overview of the First 120 Days." 27 September 1973, AFHSO file number CHECO-K717.0413-208.

Headquarters Pacific Air Forces. "Guided Bomb Operations in Southeast Asia: the Weather Dimension, 1 February – 31 December 1972." 1 October 1973, AFHSO file number CHECO-K717.0413-209.

Headquarters Pacific Air Forces. "Linebacker Operations, September-December 1972." 31 December 1978, AFHSO file number CHECO-K717.0413-218.

Office of the Secretary of the Air Force. "Air Force Policy Letter for Commanders." 1 June 1972, AFHSO Policy Letter file.

U.S. Air Force Oral History Interview. Ray E. Stratton, Forward Air Controller. 16 July 1975, AFHSO file number 31394-1221.

Defense Technical Information Center, Fort Belvoir, Va.
(Cited as DTIC, referenced by "AD" number.)

Air Proving Ground Command. "Operational Suitability Test of the Razon Bomb for Night Tactical Air Attack." 3 February 1953, AD number 004360.

Air Proving Ground Command. "Operational Suitability Test of the Tarzon Air-to-Surface Guided Missile." 13 August 1951, AD number B193076.

U.S. Air Force Systems Command. "Development and Flight Test Evaluation of the M-117 Laser Guided Bomb." December 1969, AD Number 518403.

U.S. Air Force Systems Command. "Engineering Evaluation of the Autonetics Laser Guided Bomb." May 1967, AD Number 382168.

U.S. Air Force Systems Command. "Laser Terminal Guidance Development Program." September 1967, AD Number AD384590.

U.S. Army Air Forces. "Azon Operations in Italian Theater." 30 April 1944, AD number B809087.

U.S. Army Air Forces Board. "Use of War Weary Heavy Bombers as Projectiles: Test of Continual Control from Air Employing Television and FM Radio Link." 5 February 1945, AD Number ADB195851.

U.S. Army Human Engineering Laboratories. "The Accuracy of the Azon Guided Bomb as Affected by Battle Conditions in World War II." May 1964, AD Number 600601.

U.S. Army Missile Command. "A Study of the Application of Laser Techniques to Weapon Systems." 19 February 1963, AD Number 526536.

Library of Congress, Manuscript Division, Washington, D.C.
(Cited as LOC, referenced by box number.)

Papers of Vannevar Bush

Papers of Carl A. Spaatz.

Papers of Nathan F. Twining

Papers of the Wright Brothers

National Archives and Records Administration II, College Park, Md.
(Cited as NARA II, referenced by record group and box number.)

Record Group 46.5. Records of Committees (Senate) on Defense, 1816-1988.

Record Group 107. Records of the Office of the Secretary of War.

Record Group 218. Records of the Joint Chiefs of Staff.

Record Group 233.5. Records of the Armed Services Committee (House) and its Predecessors, 1822-1988.

Record Group 273. Records of the National Security Council, 1947-1969.

Record Group 330. Records of the Office of Secretary of Defense.

Record Group 341. Records of the Office of the Chief of Staff of the Air Force.

Personal Files of Author
(Cited as Personal Files, referenced by document title and date.)

Gillespie, Clinton G. Personal History, 20 July 1985.

Gillespie, Scott C. Persian Gulf War Letters, October 1990 – March 1991.

Gillespie, Scott C. "Desert Shield/Desert Storm Memories." Speech to the Order of Daedalians, Flight 17, Albuquerque, N.Mex., 19 April 2001.

Word, Weldon. Interview by author, 19 March 2001, Tyler, Tex. Tape recording.

Texas Instruments Corporate Archives, Dallas, Tex.
(Cited as TI, referenced by document title and date.)

"Guidance Device for Sensing the Direction of a Detectable Target." Undated Patent Application circa 1967, document TI-2925.

Johnson, R.H., K.S. Goldstein, J.A. Sickle, and V.L. Reierson. "Laser-Guided Bomb (Tail Control) Technical Paper," 20 April 1967.

Johnson, Richard H. "Early Paveway LGB Notebook," 1965-1971.

U.S. Department of Defense. *Air Force Doctrine Document 1: Air Force Basic Doctrine.* Maxwell Air Force Base, Ala.: Air Force Doctrine Center, 1997.

_____. *Air Force Manual 1-1: Functions and Basic Doctrine of the United States Air Force.* Washington, D.C.: Government Printing Office, 1984.

_____. *Annual Report to the President and the Congress.* Washington, D.C.: Government Printing Office, 1991.

_____. *Conduct of the Persian Gulf War: Final Report to Congress.* Washington, D.C.: Government Printing Office, 1992.

_____. *Gulf War Air Power Survey.* Vol. 4, *Weapons, Tactics, and Training.* Washington, D.C.: Government Printing Office, 1993.

U.S. Department of State. *American Foreign Policy: Current Documents.* Washington, D.C.: Government Printing Office, 1990.

Autobiographical and Contemporary Accounts

Arnold, Henry H. *Global Mission.* New York: Harper & Brothers, 1949.

Boyce, Joseph C. *New Weapons for Air Warfare: Fire-Control Equipment, Proximity Fuzes, and Guided Missiles.* Science in World War II, Office of Scientific Research and Development. Boston: Little, Brown and Company, 1947.

Douhet, Giulio. *The Command of the Air.* Translated by Dino Ferrari. New York: Coward-McCann, 1942. [*Il dominio dell'aria*] originally published by Italian Air Ministry in 1921.

Fieser, Louis F. *The Scientific Method: A Personal Account of Unusual Projects in War and in Peace.* New York: Reinhold Publishing Corp., 1964.

Foulois, Benjamin D. and Carroll V. Glines. *From the Wright Brothers to the Astronauts: The Memoirs of Major General Benjamin D. Foulois*. New York: McGraw-Hill, 1968.

Mitchell, William. *Winged Defense*. New York: G.P. Putnam's Sons, 1925.

Morita, Akio. *Made in Japan: Akio Morita and Sony*. New York: Penguin Books, 1986.

Risner, Robinson. *The Passing of the Night*. New York: Random House, Inc., 1975.

Newspapers and Periodicals

Air Force Magazine

Air and Space

Aviation Week and Space Technology

Morning Call, Allentown, Pa.

New York Times

SECONDARY SOURCES:

Books

Basalla, George. *The Evolution of Technology*. Cambridge: Cambridge University Press, 1988.

Brodie, Bernard, ed. *The Absolute Weapon: Atomic Power and World Order*. New York: Harcourt, Brace and Company, 1946.

_____. *Strategy in the Missile Age*. Princeton, N.J.:, Princeton University Press, 1959.

Brodie, Bernard and Fawn. *From Crossbow to H-Bomb: The Evolution of the Weapons and Tactics of Warfare*. Bloomington, Ind.: Indiana University Press, 1962.

Byman, Daniel L. *Air Power as a Coercive Instrument*. Santa Monica, Calif.: RAND Corporation, 1999.

Clodfelter, Mark. *The Limits of Air Power: The American Bombing of North Vietnam*. New York: The Free Press, 1989.

Clodfelter, Michael. *Vietnam in Military Statistics: A History of the Indochina Wars, 1772-1991*. Jefferson, N.C.: McFarland and Company, Inc., Publishers, 1995.

Constant, Edward W. III. *The Origins of the Turbojet Revolution*. Baltimore: Johns Hopkins University Press, 1980.

Crane, Conrad C. *Bombs, Cities, and Civilians: American Airpower Strategy in World War II*. Lawrence, Kans.: University Press of Kansas, 1993.

Doughty, Robert A. and Ira D. Gruber, *Warfare in the Western World*. Lexington, Mass.: D.C. Heath and Company, 1996.

Emme, Eugene M. *The Impact of Air Power: National Security and World Politics*. Princeton, N.J.: D. Van. Nostrand Company, Inc., 1959.

Farrell, Theo. *Weapons without a Cause: The Politics of Weapons Acquisition in the United States*. New York: St. Martin's Press, 1997.

Futrell, Robert Frank. *The United States Air Force in Korea, 1950-1953*. New York: Duell, Sloan and Pearce, 1961.

Gorn, Michael H. *Harnessing the Genie: Science and Technology Forecasting for the Air Force, 1944-1986*. Washington, D.C.: Office of Air Force History, 1988.

Hallion, Richard P., ed. *Air Power Confronts an Unstable World*. London: Brassey's, 1997.

_____. *Storm Over Iraq: Air Power and the Gulf War*. Washington, D.C.: Smithsonian Institution Press, 1992.

Halperin, Morton H. *Limited War in the Nuclear Age*. New York: John Wiley & Sons, Inc., 1963.

Haydon, Frederick Stansbury. *Aeronautics in the Union and Confederate Armies: With a Survey of Military Aeronautics Prior to 1861*. Baltimore: The Johns Hopkins University Press, 1941.

Holley, Irving B. Jr. *Buying Aircraft: Materiel Procurement for the Army Air Forces*. U.S. Army in World War II, Special Studies, ed. Stetson Conn. Washington, D.C.: Office of the Chief of Military History, Department of the Army, 1964.

_____. *Ideas and Weapons*. New Haven, Conn.: Yale University Press, 1953.

Hughes, Thomas P. *American Genesis: A History of the American Genius for Invention*. New York: Penguin Books, 1989.

Hurley, Alfred F. *Billy Mitchell: Crusader for Air Power*. Bloomington, Ind.: Indiana University Press, 1964.

Hurley, Alfred F. and Robert C. Ehrhart, eds. *Air Power and Warfare*. Washington, D.C.: Office of Air Force History, 1979.

Huzar, Elias. *The Purse and the Sword: Control of the Army by Congress Through Military Appropriations, 1933-1950*. Ithaca, N.Y.: Cornell University Press, 1950.

Johnson, David E. *Fast Tanks and Heavy Bombers: Innovation in the U.S. Army, 1917-1945*. Ithaca, N.Y.: Cornell University Press, 1998.

Kahn, Herman. *Thinking About the Unthinkable in the 1980s*. New York: Simon and Schuster, 1984.

Keaney, Thomas A. and Eliot A. Cohen. *Revolution in Warfare?: Air Power in the Persian Gulf*. Annapolis, Md.: Naval Institute Press, 1995.

Kennett, Lee. *The First Air War: 1914-1918*. New York: The Free Press, 1991.

Kevles, Daniel J. *The Physicists: The History of a Scientific Community in Modern America*. Cambridge, Mass.: Harvard University Press, 1971.

Kuhn, Thomas S. *The Structure of Scientific Revolutions*, 1962, 2nd ed. Chicago: University of Chicago Press, 1970.

MacKenzie, Donald. *Inventing Accuracy: A Historical Sociology of Nuclear Missile Guidance*. Cambridge, Mass.: The MIT Press, 1990.

McFarland, Stephen L. *America's Pursuit of Precision Bombing, 1910-1945*. Washington, D.C.: Smithsonian Institution Press, 1995.

McNeill, William H. *The Pursuit of Power: Technology, Armed Force, and Society since A.D. 1000*. Chicago: University of Chicago Press, 1982.

Meilinger, Phillip S. *The Paths of Heaven: The Evolution of Airpower Theory*. Maxwell Air Force Base, Ala.: Air University Press, 1997.

Mendelsohn, Everett, Merritt Roe Smith, and Peter Weingart, eds. *Science, Technology, and the Military*. Dordrecht, The Netherlands: Kluwer Academic Publishers, 1988.

Mets, David R. *The Air Campaign: John Warden and the Classical Airpower Theorists*. Maxwell AFB, Ala.: Air University Press, 1998.

_____. *Land-Based Air Power in Third World Crises*. Maxwell AFB, Ala.: Air University Press, 1986.

_____. *The Long Search for a Surgical Strike: Precision Guided Munitions and the Revolution in Military Affairs*. Maxwell AFB, Ala.: Air University Press, 2001.

_____. *Master of Air Power: General Carl A. Spaatz*. Novato, California: Presidio Press, 1988.

Millett Allan R., and Peter Maslowski. *For the Common Defense: A Military History of the United States of America*, Revised and Expanded Edition. New York: The Free Press, 1994.

Mokyr, Joel. *The Lever of Riches: Technological Creativity and Economic Progress*. Oxford: Oxford University Press, 1990.

Momyer, William W. *Air Power in Three Wars*. New York: Arno Press, 1980.

Mrozek, Donald J. *The U.S. Air Force After Vietnam: Postwar Challenges and Potential for Responses*. Maxwell Air Force Base, Ala.: Air University Press, 1988.

Olsen, Jack. *Aphrodite: Desperate Mission*. New York: Pyramid Books, 1972.

Pacey, Arnold. *The Maze of Ingenuity: Ideas and Idealism in the Development of Technology.* New York: Holmes & Meier Publishers, Inc., 1975.

Pape, Robert A. *Bombing to Win: Air Power and Coercion in War.* Ithaca, N.Y.: Cornell University Press, 1996.

Preston, Richard A., Alex Roland, and Sydney F. Wise. *Men in Arms: A History of Warfare and its Interrelationships with Western Society.* Fort Worth: Harcourt Brace Jovanovich, Inc., 1991.

Rutkowski, Edwin C. *The Politics of Military Aviation Procurement, 1926-1934: A Study in the Political Assertion of Consensual Values.* Columbus, Ohio: The Ohio State University Press, 1966.

Samuels, Richard J. *"Rich Nation, Strong Army": National Security and the Technological Transformation of Japan.* Ithaca: Cornell University Press, 1994.

Saundby, Robert. *Air Bombardment: The Story of its Development.* New York: Harper & Brothers, 1961.

Searls, Hank. *The Lost Prince: Young Joe, the Forgotten Kennedy; The Story of the Oldest Brother.* New York: The World Publishing Company, 1969.

Sherry, Michael S. *The Rise of American Air Power: The Creation of Armageddon.* New Haven, Conn.: Yale University Press, 1987.

Shiner, John F. *Foulois and the U.S. Army Air Corps, 1931-1935.* Washington, D.C.: Office of Air Force History, 1983.

Shultz, Richard H. Jr., and Robert L. Pfaltzgraff Jr., eds. *The Future of Air Power in the Aftermath of the Gulf War.* Maxwell AFB, Ala.: Air University Press, 1992.

Smith, Merritt Roe., ed. *Military Enterprise and Technological Change: Perspectives on the American Experience.* Cambridge, Mass.: The MIT Press, 1985.

Spassky, Nickolai, ed. *Russia's Arms.* Vol. VII, *Precision Guided Weapons and Ammunition.* Moscow: Military Parade Ltd., 1997.

Weigley, Russell F. *The American Way of War: A History of United States Military Strategy and Policy.* Bloomington, Ind.: Indiana University Press, 1973.

Wells, Mark K. *Courage and Air Warfare: The Allied Aircrew Experience in the Second World War.* London: Frank Cass and Company, Ltd., 1995.

_____, ed. *Air Power: Promise and Reality.* Chicago: Imprint Publications, 2000.

Published Papers and Articles

Boyne, Walter. "Missiles Against the Roma." *Flying Review International*, February 1968, 102-107.

_____. "Nickel Grass." *Air Force Magazine*, December 1998, 54-59.

Digby, James and S.J. Dudzinsky Jr. *Qualitative Constraints on Conventional Armaments: An Emerging Issue*. A report prepared for U.S. Arms Control & Disarmament Agency. Santa Monica, Calif.: The Rand Corporation, 1976.

Dunlap, Charles J. Jr. *Technology and the 21st Century Battlefield: Recomplicating Moral Life for the Statesman and Soldier*. Carlisle, Pa.: Strategic Studies Institute, 1999.

Hagen, Lawrence S. *The Two Faces of Janus: An Assessment of the Politico-Military Impact of Precision-Guided Munitions*. National Security Series Number 5/77. Kingston, Canada: Centre for International Relations, Queen's University, 1977.

Hallion, Richard P. "Precision Guided Munitions and the New Era of Warfare." *Air Power Studies Centre Paper Number 53*. Fairbairn, Australia: Air Power Studies Centre, 1997.

Lewy, Guenter. "Some Political-Military Lessons of the Vietnam War." *Journal of U.S. Army War College*, Spring 1984, 84-94.

Mets, David R. "Stretching the Rubber Band: Smart Weapons for Air-to-Ground Attack." In *Technology and the Air Force: A Retrospective Assessment*, ed. Jacob Neufeld, George M. Watson Jr., and David Chenoweth, 122-139. Washington, D.C.: Air Force History and Museums Program, 1997.

Morrocco, John D. and Fulghum, David A. "USAF Developed 4,700-lb. Bomb in Crash Program to Attack Iraqi Military Leaders in Hardened Bunkers." *Aviation Week and Space Technology*, 6 May 1991, 67.

Pape, Robert A. "The Limits of Precision-Guided Air Power." *Security Studies* 7, 2 (Winter 1997/98): 93-114.

Parkinson, Russell J. "Aeronautics at the Hague Conference of 1899." *Airpower Historian* VII, 2 (April 1960): 106-112.

Roemerman, Steve. "The History of Guided Missiles at Texas Instruments." *TI Technical Journal*, July-August 1995, 67-73.

Seidel, Roger F. *Preemption and Retribution: Precision-Guided Munitions to Counter Terrorist Threats*. Carlisle, Pa.: U.S. Army War College, 1998.

Spires, Shelby G. "Guiding Light." *Air and Space*, April/May 1999, 66-73.

Tirpak, John A. "The State of Precision Engagement." *Air Force Magazine*, March 2000, 24-30.

Weigley, Russell F. "The American Military and the Principle of Civilian Control from McClellan to Powell." *Journal of Military History* 57, 5 (October 1993): 27-58.

Werrell, Kenneth P. "The USAF and the Cruise Missile: Opportunity or Threat?" In *Technology and the Air Force: A Retrospective Assessment*, ed. Jacob Neufeld, George M. Watson Jr., and David Chenoweth, 140-161. Washington, D.C.: Air Force History and Museums Program, 1997.

FIGURE 28
Author and Subject Coexisting Peacefully

VITA

Ph.D. Candidate: Paul G. Gillespie

Date of Birth: March 23, 1962

Place of Birth: San Antonio, Texas

Parents: Clinton G. and Elma O. Gillespie

Family: Wife – Yvonne, Children – Bryan, Clinton, Spencer, & Giuliana

Education: B.S. California Institute of Technology, Pasadena, Calif., 1986
Engineering & Applied Science/History
M.A. University of Colorado, Colorado Springs, Colo., 1994
History

Professional Positions:

1989-present Communications-Computer Officer, U.S. Air Force, Rank – Major

1997-1999 Instructor/Assistant Professor of History, U.S. Air Force Academy

1996-1997 Instructor of History, University of Maryland, European Division

1986-1989 Research Engineer, General Dynamics Corp., Pomona Division

Publications:

Forged by Fire: Military History for the Profession of Arms, associate editor with Tony Kern et al (Needham Heights, Mass.: Simon & Schuster Custom Publishing, 1998).

Review of *Science, Technology and Society in Contemporary Japan*, by Morris Low, Shigeru Nakayama, and Hitoshi Yoshioka. *Science, Technology & Society Curriculum Newsletter* 121/122 (Fall/Winter 1999): 19.

Six articles for the *Encyclopedia of Airpower*, Walter Boyne, ed. (Denver: ABC-Clio Press, 2002): including "Precision Guided Munitions" and "Aerial Torpedoes."

Honors: Rodman W. Paul Prize, Top History Undergraduate, Caltech, 1986
Distinguished Graduate, USAF Officer Training School, 1989
Distinguished Graduate, USAF Basic Computer Officer Training, 1990
Phi Alpha Theta, History Honor Society, 1994

VITA

Ph.D. Candidate: Paul G. Gillespie

Date of Birth: March 23, 1962

Place of Birth: San Antonio, Texas

Parents: Clinton G. and Elma O. Gillespie

Family: Wife – Yvonne, Children – Bryan, Clinton, Spencer, & Giuliana

Education: B.S. California Institute of Technology, Pasadena, Calif., 1986
Engineering & Applied Science/History
M.A. University of Colorado, Colorado Springs, Colo., 1994
History

Professional Positions:

1989-present Communications-Computer Officer, U.S. Air Force, Rank – Major

1997-1999 Instructor/Assistant Professor of History, U.S. Air Force Academy

1996-1997 Instructor of History, University of Maryland, European Division

1986-1989 Research Engineer, General Dynamics Corp., Pomona Division

Publications:

Forged by Fire: Military History for the Profession of Arms, associate editor with Tony Kern et al (Needham Heights, Mass.: Simon & Schuster Custom Publishing, 1998).

Review of *Science, Technology and Society in Contemporary Japan*, by Morris Low, Shigeru Nakayama, and Hitoshi Yoshioka. *Science, Technology & Society Curriculum Newsletter* 121/122 (Fall/Winter 1999): 19.

Six articles for the *Encyclopedia of Airpower*, Walter Boyne, ed. (Denver: ABC-Clio Press, 2002): including "Precision Guided Munitions" and "Aerial Torpedoes."

Honors: Rodman W. Paul Prize, Top History Undergraduate, Caltech, 1986
Distinguished Graduate, USAF Officer Training School, 1989
Distinguished Graduate, USAF Basic Computer Officer Training, 1990
Phi Alpha Theta, History Honor Society, 1994

Abstract

This study examines the history of an emergent class of weapons known collectively as precision guided munitions (PGMs). Arising from historical antecedents in the First and Second World Wars, the specific technologies that made precision guidance a reality in the late 1960s were, nevertheless, the unique product of concerted actions taken within the U.S. military, the federal government, and civilian industry. Precision weapons did not emerge as a natural consequence of technological change, but were consciously constructed in response to the purposes, ethics, and values of American society. Certainly the creation of important enabling technologies, notably lasers and semiconductor integrated circuits, played a decisive role in the development of these advanced weapons. However, the emergence of guided weapons is inexplicable without also considering America's evolving defense policy; the military doctrine that translated that policy into specific weapon systems; and twentieth-century wartime demand, which stimulated research and development by providing added urgency, requirements, and resources. Entering America's arsenal at the height of cold war tensions, PGMs provided an appealing alternative to the largely impotent nuclear bombs and missiles that had become the centerpiece of U.S. military strategy. Post-Vietnam military operations highlighted a marked shift in emphasis away from mass destruction in favor of inflicting precise, controlled damage. Reliance upon this technological innovation has produced a remarkable three-tiered revolutionary transformation in munitions technology, armed conflict, and U.S. national security policy.

BIBLIOGRAPHY

PRIMARY SOURCES:

Air Force Historical Research Agency, Maxwell Air Force Base, Montgomery, Ala. (Cited as AFHRA, referenced by file number.)

Air Proving Ground Command. "Combat Employment of Tarzon and Razon Guided Missiles." 31 August 1951, AFHRA file number K240.01.

Air Proving Ground Command. "Drone Activities at the Air Proving Ground Command." December 1951, AFHRA file number K240.01.

Air Proving Ground Command. "History of 1st Experimental Guided Missiles Group." 1 July 1948 to 30 June 1949, AFRHA file number GP-MI-1-HI.

Air Proving Ground Command. "Interim Report on Air Proving Ground and Other Experimental Activities in Support of Korean Operations." 5 September 1951, AFHRA file number K240.04B.

Headquarters 19th Bombardment Group. "Combat Employment of Tarzon and Razon Guided Missiles—Final Activity Report." 31 August 1951, AFHRA file number K240.01.

U.S. Air Force Historical Archives. "End of Tour Report—Colonel Larry M. Killpack." 21 May 1971, AFHRA file number K717.131.

U.S. Air Force Historical Archives. "Oral History Interview—Captain Mark D. Kimball." 10 July 1970, AFHRA file number K239.0512-384.

U.S. Air Force Historical Division. *United States Air Force Operations in the Korean Conflict, 1 November 1950 - 30 June 1952.* 1 July 1955, AFHRA file number 101-72.

U.S. Air Force Museum. "Kettering Bug Exhibit." 14 March 1964, AFHRA file number K289.9201-1.

U.S. Army Air Corps Board. "Study No. 9—Radio Controlled Aircraft." 25 October 1935, AFHRA file number 167.5-9.

U.S. Army Air Corps Chief. B. D. Foulois to Adjutant General, "Development of Radio Controlled Airplanes." 6 May 1935, AFHRA file number 167.5-9.

U.S. Army Air Corps Materiel Division. A.W. Robins to Chief of the Air Corps, "Development of Radio Controlled Airplanes." 31 May 1935, AFHRA, file number 167.5-9.

U.S. Army Air Defense Command. "Air Intelligence Reports." 1 January 1947, AFHRA, file number 410.608.

U.S. Army Experimental Engineering Section. "The Kettering Aerial Torpedo." 19 May 1927, AFHRA file number MICFILM 43794.

U.S. Department of Defense, Joint Chiefs of Staff. "Response to UK Request for Paveway II Bombs." 24 February 1991, AFHRA file number CSS-4-31.

Air Force History Support Office, Bolling Air Force Base, Washington, D.C. (Cited as AFHSO, referenced by file number.)

Headquarters 3rd Bombardment Division. "Observations on Bombing Results in Paris Area." 18 September 1944, AFHSO file number B5533-434.

Headquarters 3rd Bombardment Division. "Plan for Completion of Caster Project." 12 October 1944, AFHSO file number B5529-1015.

Headquarters 3rd Bombardment Division. "Report on Aphrodite Project." 20 January 1945, AFHSO file number B5529-1015.

Headquarters 388th Bombardment Group. "Intelligence Report—Aphrodite Mission No. 3." 12 August 1944, AFHSO file number B5530-351.

Headquarters 7th Air Force. "An Analysis of Laser Guided Bombs in Southeast Asia – Air Operations Report 73/4." 28 June 1973, AFHSO file number K7640-245.

Headquarters 7th Air Force. "Pave Way Utility and Cost Effectiveness in Southeast Asia." 15 September 1968, AFHSO file number K7725-506.

Headquarters Pacific Air Forces. "The Air War in Vietnam: 1968-1969." 1 April 1970, AFHSO file number CHECO-K717.0413-75.

Headquarters Pacific Air Forces. "Second Generation Weaponry in Southeast Asia." 10 September 1970, AFHSO file number CHECO-K717.0413-80.

Headquarters Pacific Air Forces. "Linebacker: Overview of the First 120 Days." 27 September 1973, AFHSO file number CHECO-K717.0413-208.

Headquarters Pacific Air Forces. "Guided Bomb Operations in Southeast Asia: the Weather Dimension, 1 February – 31 December 1972." 1 October 1973, AFHSO file number CHECO-K717.0413-209.

Headquarters Pacific Air Forces. "Linebacker Operations, September-December 1972." 31 December 1978, AFHSO file number CHECO-K717.0413-218.

Office of the Secretary of the Air Force. "Air Force Policy Letter for Commanders." 1 June 1972, AFHSO Policy Letter file.

U.S. Air Force Oral History Interview. Ray E. Stratton, Forward Air Controller. 16 July 1975, AFHSO file number 31394-1221.

Defense Technical Information Center, Fort Belvoir, Va.
(Cited as DTIC, referenced by "AD" number.)

Air Proving Ground Command. "Operational Suitability Test of the Razon Bomb for Night Tactical Air Attack." 3 February 1953, AD number 004360.

Air Proving Ground Command. "Operational Suitability Test of the Tarzon Air-to-Surface Guided Missile." 13 August 1951, AD number B193076.

U.S. Air Force Systems Command. "Development and Flight Test Evaluation of the M-117 Laser Guided Bomb." December 1969, AD Number 518403.

U.S. Air Force Systems Command. "Engineering Evaluation of the Autonetics Laser Guided Bomb." May 1967, AD Number 382168.

U.S. Air Force Systems Command. "Laser Terminal Guidance Development Program." September 1967, AD Number AD384590.

U.S. Army Air Forces. "Azon Operations in Italian Theater." 30 April 1944, AD number B809087.

U.S. Army Air Forces Board. "Use of War Weary Heavy Bombers as Projectiles: Test of Continual Control from Air Employing Television and FM Radio Link." 5 February 1945, AD Number ADB195851.

U.S. Army Human Engineering Laboratories. "The Accuracy of the Azon Guided Bomb as Affected by Battle Conditions in World War II." May 1964, AD Number 600601.

U.S. Army Missile Command. "A Study of the Application of Laser Techniques to Weapon Systems." 19 February 1963, AD Number 526536.

Library of Congress, Manuscript Division, Washington, D.C.
(Cited as LOC, referenced by box number.)

Papers of Vannevar Bush

Papers of Carl A. Spaatz.

Papers of Nathan F. Twining

Papers of the Wright Brothers

National Archives and Records Administration II, College Park, Md.
(Cited as NARA II, referenced by record group and box number.)

Record Group 46.5. Records of Committees (Senate) on Defense, 1816-1988.

Record Group 107. Records of the Office of the Secretary of War.

Record Group 218. Records of the Joint Chiefs of Staff.

Record Group 233.5. Records of the Armed Services Committee (House) and its Predecessors, 1822-1988.

Record Group 273. Records of the National Security Council, 1947-1969.

Record Group 330. Records of the Office of Secretary of Defense.

Record Group 341. Records of the Office of the Chief of Staff of the Air Force.

Personal Files of Author
(Cited as Personal Files, referenced by document title and date.)

Gillespie, Clinton G. Personal History, 20 July 1985.

Gillespie, Scott C. Persian Gulf War Letters, October 1990 – March 1991.

Gillespie, Scott C. "Desert Shield/Desert Storm Memories." Speech to the Order of Daedalians, Flight 17, Albuquerque, N.Mex., 19 April 2001.

Word, Weldon. Interview by author, 19 March 2001, Tyler, Tex. Tape recording.

Texas Instruments Corporate Archives, Dallas, Tex.
(Cited as TI, referenced by document title and date.)

"Guidance Device for Sensing the Direction of a Detectable Target." Undated Patent Application circa 1967, document TI-2925.

Johnson, R.H., K.S. Goldstein, J.A. Sickle, and V.L. Reierson. "Laser-Guided Bomb (Tail Control) Technical Paper," 20 April 1967.

Johnson, Richard H. "Early Paveway LGB Notebook," 1965-1971.

U.S. Department of Defense. *Air Force Doctrine Document 1: Air Force Basic Doctrine.* Maxwell Air Force Base, Ala.: Air Force Doctrine Center, 1997.

_____. *Air Force Manual 1-1: Functions and Basic Doctrine of the United States Air Force.* Washington, D.C.: Government Printing Office, 1984.

_____. *Annual Report to the President and the Congress.* Washington, D.C.: Government Printing Office, 1991.

_____. *Conduct of the Persian Gulf War: Final Report to Congress.* Washington, D.C.: Government Printing Office, 1992.

_____. *Gulf War Air Power Survey.* Vol. 4, *Weapons, Tactics, and Training.* Washington, D.C.: Government Printing Office, 1993.

U.S. Department of State. *American Foreign Policy: Current Documents.* Washington, D.C.: Government Printing Office, 1990.

Autobiographical and Contemporary Accounts

Arnold, Henry H. *Global Mission.* New York: Harper & Brothers, 1949.

Boyce, Joseph C. *New Weapons for Air Warfare: Fire-Control Equipment, Proximity Fuzes, and Guided Missiles.* Science in World War II, Office of Scientific Research and Development. Boston: Little, Brown and Company, 1947.

Douhet, Giulio. *The Command of the Air.* Translated by Dino Ferrari. New York: Coward-McCann, 1942. [*Il dominio dell'aria*] originally published by Italian Air Ministry in 1921.

Fieser, Louis F. *The Scientific Method: A Personal Account of Unusual Projects in War and in Peace.* New York: Reinhold Publishing Corp., 1964.

Foulois, Benjamin D. and Carroll V. Glines. *From the Wright Brothers to the Astronauts: The Memoirs of Major General Benjamin D. Foulois*. New York: McGraw-Hill, 1968.

Mitchell, William. *Winged Defense*. New York: G.P. Putnam's Sons, 1925.

Morita, Akio. *Made in Japan: Akio Morita and Sony*. New York: Penguin Books, 1986.

Risner, Robinson. *The Passing of the Night.* New York: Random House, Inc., 1975.

Newspapers and Periodicals

Air Force Magazine

Air and Space

Aviation Week and Space Technology

Morning Call, Allentown, Pa.

New York Times

SECONDARY SOURCES:

Books

Basalla, George. *The Evolution of Technology*. Cambridge: Cambridge University Press, 1988.

Brodie, Bernard, ed. *The Absolute Weapon: Atomic Power and World Order*. New York: Harcourt, Brace and Company, 1946.

_____. *Strategy in the Missile Age*. Princeton, N.J.:, Princeton University Press, 1959.

Brodie, Bernard and Fawn. *From Crossbow to H-Bomb: The Evolution of the Weapons and Tactics of Warfare*. Bloomington, Ind.: Indiana University Press, 1962.

Byman, Daniel L. *Air Power as a Coercive Instrument*. Santa Monica, Calif.: RAND Corporation, 1999.

Clodfelter, Mark. *The Limits of Air Power: The American Bombing of North Vietnam*. New York: The Free Press, 1989.

Clodfelter, Michael. *Vietnam in Military Statistics: A History of the Indochina Wars, 1772-1991*. Jefferson, N.C.: McFarland and Company, Inc., Publishers, 1995.

Constant, Edward W. III. *The Origins of the Turbojet Revolution*. Baltimore: Johns Hopkins University Press, 1980.

Crane, Conrad C. *Bombs, Cities, and Civilians: American Airpower Strategy in World War II*. Lawrence, Kans.: University Press of Kansas, 1993.

Doughty, Robert A. and Ira D. Gruber, *Warfare in the Western World*. Lexington, Mass.: D.C. Heath and Company, 1996.

Emme, Eugene M. *The Impact of Air Power: National Security and World Politics*. Princeton, N.J.: D. Van. Nostrand Company, Inc., 1959.

Farrell, Theo. *Weapons without a Cause: The Politics of Weapons Acquisition in the United States*. New York: St. Martin's Press, 1997.

Futrell, Robert Frank. *The United States Air Force in Korea, 1950-1953*. New York: Duell, Sloan and Pearce, 1961.

Gorn, Michael H. *Harnessing the Genie: Science and Technology Forecasting for the Air Force, 1944-1986*. Washington, D.C.: Office of Air Force History, 1988.

Hallion, Richard P., ed. *Air Power Confronts an Unstable World.* London: Brassey's, 1997.

_____. *Storm Over Iraq: Air Power and the Gulf War.* Washington, D.C.: Smithsonian Institution Press, 1992.

Halperin, Morton H. *Limited War in the Nuclear Age.* New York: John Wiley & Sons, Inc., 1963.

Haydon, Frederick Stansbury. *Aeronautics in the Union and Confederate Armies: With a Survey of Military Aeronautics Prior to 1861.* Baltimore: The Johns Hopkins University Press, 1941.

Holley, Irving B. Jr. *Buying Aircraft: Materiel Procurement for the Army Air Forces.* U.S. Army in World War II, Special Studies, ed. Stetson Conn. Washington, D.C.: Office of the Chief of Military History, Department of the Army, 1964.

_____. *Ideas and Weapons.* New Haven, Conn.: Yale University Press, 1953.

Hughes, Thomas P. *American Genesis: A History of the American Genius for Invention.* New York: Penguin Books, 1989.

Hurley, Alfred F. *Billy Mitchell: Crusader for Air Power.* Bloomington, Ind.: Indiana University Press, 1964.

Hurley, Alfred F. and Robert C. Ehrhart, eds. *Air Power and Warfare.* Washington, D.C.: Office of Air Force History, 1979.

Huzar, Elias. *The Purse and the Sword: Control of the Army by Congress Through Military Appropriations, 1933-1950.* Ithaca, N.Y.: Cornell University Press, 1950.

Johnson, David E. *Fast Tanks and Heavy Bombers: Innovation in the U.S. Army, 1917-1945.* Ithaca, N.Y.: Cornell University Press, 1998.

Kahn, Herman. *Thinking About the Unthinkable in the 1980s.* New York: Simon and Schuster, 1984.

Keaney, Thomas A. and Eliot A. Cohen. *Revolution in Warfare?: Air Power in the Persian Gulf.* Annapolis, Md.: Naval Institute Press, 1995.

Kennett, Lee. *The First Air War: 1914-1918.* New York: The Free Press, 1991.

Kevles, Daniel J. *The Physicists: The History of a Scientific Community in Modern America.* Cambridge, Mass.: Harvard University Press, 1971.

Kuhn, Thomas S. *The Structure of Scientific Revolutions*, 1962, 2nd ed. Chicago: University of Chicago Press, 1970.

MacKenzie, Donald. *Inventing Accuracy: A Historical Sociology of Nuclear Missile Guidance*. Cambridge, Mass.: The MIT Press, 1990.

McFarland, Stephen L. *America's Pursuit of Precision Bombing, 1910-1945*. Washington, D.C.: Smithsonian Institution Press, 1995.

McNeill, William H. *The Pursuit of Power: Technology, Armed Force, and Society since A.D. 1000*. Chicago: University of Chicago Press, 1982.

Meilinger, Phillip S. *The Paths of Heaven: The Evolution of Airpower Theory*. Maxwell Air Force Base, Ala.: Air University Press, 1997.

Mendelsohn, Everett, Merritt Roe Smith, and Peter Weingart, eds. *Science, Technology, and the Military*. Dordrecht, The Netherlands: Kluwer Academic Publishers, 1988.

Mets, David R. *The Air Campaign: John Warden and the Classical Airpower Theorists*. Maxwell AFB, Ala.: Air University Press, 1998.

_____. *Land-Based Air Power in Third World Crises*. Maxwell AFB, Ala.: Air University Press, 1986.

_____. *The Long Search for a Surgical Strike: Precision Guided Munitions and the Revolution in Military Affairs*. Maxwell AFB, Ala.: Air University Press, 2001.

_____. *Master of Air Power: General Carl A. Spaatz*. Novato, California: Presidio Press, 1988.

Millett Allan R., and Peter Maslowski. *For the Common Defense: A Military History of the United States of America*, Revised and Expanded Edition. New York: The Free Press, 1994.

Mokyr, Joel. *The Lever of Riches: Technological Creativity and Economic Progress*. Oxford: Oxford University Press, 1990.

Momyer, William W. *Air Power in Three Wars*. New York: Arno Press, 1980.

Mrozek, Donald J. *The U.S. Air Force After Vietnam: Postwar Challenges and Potential for Responses*. Maxwell Air Force Base, Ala.: Air University Press, 1988.

Olsen, Jack. *Aphrodite: Desperate Mission*. New York: Pyramid Books, 1972.

Pacey, Arnold. *The Maze of Ingenuity: Ideas and Idealism in the Development of Technology.* New York: Holmes & Meier Publishers, Inc., 1975.

Pape, Robert A. *Bombing to Win: Air Power and Coercion in War.* Ithaca, N.Y.: Cornell University Press, 1996.

Preston, Richard A., Alex Roland, and Sydney F. Wise. *Men in Arms: A History of Warfare and its Interrelationships with Western Society.* Fort Worth: Harcourt Brace Jovanovich, Inc., 1991.

Rutkowski, Edwin C. *The Politics of Military Aviation Procurement, 1926-1934: A Study in the Political Assertion of Consensual Values.* Columbus, Ohio: The Ohio State University Press, 1966.

Samuels, Richard J. *"Rich Nation, Strong Army": National Security and the Technological Transformation of Japan.* Ithaca: Cornell University Press, 1994.

Saundby, Robert. *Air Bombardment: The Story of its Development.* New York: Harper & Brothers, 1961.

Searls, Hank. *The Lost Prince: Young Joe, the Forgotten Kennedy; The Story of the Oldest Brother.* New York: The World Publishing Company, 1969.

Sherry, Michael S. *The Rise of American Air Power: The Creation of Armageddon.* New Haven, Conn.: Yale University Press, 1987.

Shiner, John F. *Foulois and the U.S. Army Air Corps, 1931-1935.* Washington, D.C.: Office of Air Force History, 1983.

Shultz, Richard H. Jr., and Robert L. Pfaltzgraff Jr., eds. *The Future of Air Power in the Aftermath of the Gulf War.* Maxwell AFB, Ala.: Air University Press, 1992.

Smith, Merritt Roe., ed. *Military Enterprise and Technological Change: Perspectives on the American Experience.* Cambridge, Mass.: The MIT Press, 1985.

Spassky, Nickolai, ed. *Russia's Arms.* Vol. VII, *Precision Guided Weapons and Ammunition.* Moscow: Military Parade Ltd., 1997.

Weigley, Russell F. *The American Way of War: A History of United States Military Strategy and Policy.* Bloomington, Ind.: Indiana University Press, 1973.

Wells, Mark K. *Courage and Air Warfare: The Allied Aircrew Experience in the Second World War.* London: Frank Cass and Company, Ltd., 1995.

_____, ed. *Air Power: Promise and Reality.* Chicago: Imprint Publications, 2000.

Published Papers and Articles

Boyne, Walter. "Missiles Against the Roma." *Flying Review International*, February 1968, 102-107.

_____. "Nickel Grass." *Air Force Magazine*, December 1998, 54-59.

Digby, James and S.J. Dudzinsky Jr. *Qualitative Constraints on Conventional Armaments: An Emerging Issue*. A report prepared for U.S. Arms Control & Disarmament Agency. Santa Monica, Calif.: The Rand Corporation, 1976.

Dunlap, Charles J. Jr. *Technology and the 21st Century Battlefield: Recomplicating Moral Life for the Statesman and Soldier*. Carlisle, Pa.: Strategic Studies Institute, 1999.

Hagen, Lawrence S. *The Two Faces of Janus: An Assessment of the Politico-Military Impact of Precision-Guided Munitions*. National Security Series Number 5/77. Kingston, Canada: Centre for International Relations, Queen's University, 1977.

Hallion, Richard P. "Precision Guided Munitions and the New Era of Warfare." *Air Power Studies Centre Paper Number 53*. Fairbairn, Australia: Air Power Studies Centre, 1997.

Lewy, Guenter. "Some Political-Military Lessons of the Vietnam War." *Journal of U.S. Army War College*, Spring 1984, 84-94.

Mets, David R. "Stretching the Rubber Band: Smart Weapons for Air-to-Ground Attack." In *Technology and the Air Force: A Retrospective Assessment*, ed. Jacob Neufeld, George M. Watson Jr., and David Chenoweth, 122-139. Washington, D.C.: Air Force History and Museums Program, 1997.

Morrocco, John D. and Fulghum, David A. "USAF Developed 4,700-lb. Bomb in Crash Program to Attack Iraqi Military Leaders in Hardened Bunkers." *Aviation Week and Space Technology*, 6 May 1991, 67.

Pape, Robert A. "The Limits of Precision-Guided Air Power." *Security Studies* 7, 2 (Winter 1997/98): 93-114.

Parkinson, Russell J. "Aeronautics at the Hague Conference of 1899." *Airpower Historian* VII, 2 (April 1960): 106-112.

Roemerman, Steve. "The History of Guided Missiles at Texas Instruments." *TI Technical Journal*, July-August 1995, 67-73.

Seidel, Roger F. *Preemption and Retribution: Precision-Guided Munitions to Counter Terrorist Threats*. Carlisle, Pa.: U.S. Army War College, 1998.

Spires, Shelby G. "Guiding Light." *Air and Space*, April/May 1999, 66-73.

Tirpak, John A. "The State of Precision Engagement." *Air Force Magazine*, March 2000, 24-30.

Weigley, Russell F. "The American Military and the Principle of Civilian Control from McClellan to Powell." *Journal of Military History* 57, 5 (October 1993): 27-58.

Werrell, Kenneth P. "The USAF and the Cruise Missile: Opportunity or Threat?" In *Technology and the Air Force: A Retrospective Assessment*, ed. Jacob Neufeld, George M. Watson Jr., and David Chenoweth, 140-161. Washington, D.C.: Air Force History and Museums Program, 1997.

FIGURE 28
Author and Subject Coexisting Peacefully

VITA

Ph.D. Candidate: Paul G. Gillespie

Date of Birth: [redacted]

Place of Birth: San Antonio, Texas

Parents: Clinton G. and Elma O. Gillespie

Family: Wife – Yvonne, Children – Bryan, Clinton, Spencer, & Giuliana

Education: B.S. California Institute of Technology, Pasadena, Calif., 1986
Engineering & Applied Science/History
M.A. University of Colorado, Colorado Springs, Colo., 1994
History

Professional Positions:

1989-present Communications-Computer Officer, U.S. Air Force, Rank – Major

1997-1999 Instructor/Assistant Professor of History, U.S. Air Force Academy

1996-1997 Instructor of History, University of Maryland, European Division

1986-1989 Research Engineer, General Dynamics Corp., Pomona Division

Publications:

Forged by Fire: Military History for the Profession of Arms, associate editor with Tony Kern et al (Needham Heights, Mass.: Simon & Schuster Custom Publishing, 1998).

Review of *Science, Technology and Society in Contemporary Japan*, by Morris Low, Shigeru Nakayama, and Hitoshi Yoshioka. *Science, Technology & Society Curriculum Newsletter* 121/122 (Fall/Winter 1999): 19.

Six articles for the *Encyclopedia of Airpower*, Walter Boyne, ed. (Denver: ABC-Clio Press, 2002): including "Precision Guided Munitions" and "Aerial Torpedoes."

Honors: Rodman W. Paul Prize, Top History Undergraduate, Caltech, 1986
Distinguished Graduate, USAF Officer Training School, 1989
Distinguished Graduate, USAF Basic Computer Officer Training, 1990
Phi Alpha Theta, History Honor Society, 1994