AIRPOWER RESEARCH INSTITUTE

DISTRIBUTION STATEMENT A
Approved for Public Release
Distribution Unlimited

USAF Airlift into the Heart of Darkness, the Congo 1960-1978 Implications for Modern Air Mobility Planners

Captain Gilles K. Van Nederveen, USAF

20011005 050

Research Paper 2001-04
September 2001

College of Aerospace Doctrine, Research and Education

Air University

Disclaimer

Opinions, conclusions, and recommendations expressed or implied within are solely those of the author and do not necessarily represent the views of CADRE, Air University, the United States Air Force, the Department of Defense, or any other US Government agency. Clear for public release: distribution unlimited.

Airpower Research Institute Papers

ARI papers are occasional studies written by military defense analysts assigned to the Airpower Research Institute of the College of Aerospace Doctrine, Research and Education at Air University. The purpose of this series is to provide useful ideas and independent analysis of issues of current or potential importance to Air Force commanders and their staffs. This Airpower Research Institute paper and others in the series are also available electronically and at the Air University Research Web Site (http://research.au.af.mi) and the *Aerospace Power Chronicles* (http://www.airpower.au.af.mil).

Research Feedback

Air University is working hard to keep its research focused on interests important to the Air Force and to the nation. After you have read the research paper, please give us your frank opinion on the contents. All comments, large and small, complimentary or caustic, will be appreciated.

Director, Airpower Research Institute
CADRE/AR
401 Chennault Circle
Maxwell AFB AL 36112-6428

Title of Paper **USAF Airlift into the Heart of Darkness, the Congo 1960-1978 Implications for Modern Air Mobility Planners**

Author **Captain Gilles K. Van Nederveen, USAF**

Please use the scale below to answer these important questions, 1. Fail 2. Poor 3. Fair 4. Good 5. Excellent	
1. Is the subject matter relevant to the Air Force?	1 2 3 4 5
2. How would you rate the readability of this paper?	1 2 3 4 5
3. How useful is this research to you and your organization?	1 2 3 4 5

Or note comments:

Thank you for your assistance.

FOLD HERE

Address

Place Stamp Here

ADDRESS CORRECTION REQUESTED

Director, Airpower Research Institute
CADRE/AR
401 Chennault Circle
Maxwell AFB AL 36112-6428

FOLD HERE

Executive Summary

Airlift operations in Third World countries are always a challenge due to distances and lack of airfield facilities. USAF airlifters met that challenge three times in the Congo in 1960-64, 1964, and 1978. These operations serve as a blueprint for future air mobility contingencies. Since coalition operations are a vital part of U.S. strategy, comparing and contrasting Belgian Air Force operations in the Congo in conjunction with USAF operations are useful to anticipate the future.

When the Congo gained independence in 1960 from Belgium, rioting and violence threatened white lives. The Belgian government tried to restore order and evacuate refugees. Belgian Air Force operations in July 1960 demonstrated improvisations to aircraft and a high operations tempo. But under pressure from the United Nations Security Council Belgium had to withdraw. The USAF entered the Congo with the goal of saving Americans and providing food to the newly independent state. On 14 July 1960 the USAF became the airlift arm of United Nations security force dispatched to the Congo from over 34 countries. The USAF continued to support the UN operation until 30 June 1964 when the last UN soldier went home. In the three years separating the start and conclusion of this massive undertaking, the USAF rotated troops and maintained the logistical lifeline the UN needed.

However, the USAF conducted its most ambitious airlift in the Congo in November 1964. Internal revolts continued as rival groups sought to dominate the government. On August 4, 1964 the eastern city of Stanleyville was captured and American State Department personnel were seized. USAF C-130 aircraft flew Belgian Para-Commandos to the Congo and then on to a parachute assault on Stanleyville. A second jump took place 48 hours later. This operation foreshadowed future African adventures by the European powers. Unable to supply their own airlift, Europe turned to the USAF for strategic and outsize cargo aircraft to lift their forces to African nations.

In 1978 the Congo was invaded by rebels from Angola. Striking into the southern province of Shaba, the former Katanga, about 2,000 Europeans working the mines in the region were seized. France and Belgium, wanting to secure the release of their citizens, required USAF airlift to support operations in the Congo. The C-141s and C-5s flew vehicles, support equipment, and, above all, fuel into the Congo, allowing France and Belgium to complete their missions.

The 1978 Shaba missions were followed by smaller USAF operations in the Congo, the evacuation of Americans during the fall of the Mobutu regime and the Rwanda relief effort of 1994. None of these was matched by the intensity and diversity of the first three operations in the Congo. They all faced a remarkable set of problems and difficulties that had to be overcome. Their lessons with regard to third world airlift operations are still valid for today's global mobility challenges.

Table of Contents

Page

EXECUTIVE SUMMARY i

THE BELGIAN CONGO 1

THE FIRST AIRLIFT: BELGIAN AIR OPERATIONS IN 1960 7

THE USAF AIRLIFT 1960-64 15

USAF OPERATIONAL CHALLENGES 1960-64 23

LESSONS LEARNED 28

SUPPORT TO U.N. OPERATIONS AGAINST KATANGA, 1961-1964 30

1964 STANLEYVILLE PAULIS OPERATIONS 32

DRAGON NOIR 44

1977/78 SHABA I AND II 47

CONCLUSIONS 53

RECOMMENDATIONS 57

ACKNOWLEDGEMENTS 61

The Belgian Congo

The Congo sits on the equator in the African continent and stretches from the Atlantic coast to the high mountains that separate the Nile and Congo river basins. The nation of the Congo is roughly the size of the United States east of the Mississippi. In a clever power move, Leopold II, King of the Belgians, obtained the Congo for himself in 1884. Leopold II operated the Congo as a private proprietorship without any parliamentary oversight by Belgium or any other nation. Concerned exclusively with exploiting Congolese rubber and ivory, he condoned violence to gather these products. Reports of brutal conditions inside the Congo were circulated to the world in 1899 by Joseph Conrad in his book *Heart of Darkness,* and in 1904 by British journalist Robert Casement. These denunciations led to a loss of Belgium's international reputation and caused domestic unrest. In 1908 the Belgian state assumed the colonial administration of the Congo, renaming it the Belgian Congo, and governed it until independence on June 1960. After World War I the League of Nations added Rwanda-Burundi (ex. German colonies) as a mandate territory to the Belgian Congo. Belgian gave Rwanda-Burundi its independence in 1962.[1]

Economic development within the Belgian Congo was primarily agricultural, with two exceptions, the provinces of Kasai and Katanga. Kasai lies in the central part of the country; Katanga is located in the extreme southeastern corner of the Belgian Congo. (See map on page 4.) Kasai was the site of diamond production, while Katanga held a treasure house of minerals. For example, uranium mined there in 1943 was used to produce the first U.S. atomic weapons.[2] The Belgians undertook agricultural developments in the remainder of the country. The vast colony was held together by the great river for which it was named. The Belgians quickly realized that they could not afford to build a ground transportation infrastructure (rail or road) in the Congo to complement the river transportation network. Airports were quickly built after World War II, and Sabena, the Belgian national airline, established an extensive internal route structure using DC-3s. The air routes were used for passenger travel. Cargo still used the extensive river system of the country.[3]

The Second World War bought changes to the Congo as well as to the African continent as a whole. Urbanization increased as the population grew to 14 million from eight million. The three prinicpal cities were Leopoldville, Stanleyville, and

---

[1] Brasil Davidson, *The Story of Africa* (London: Mitchell Beasley Publishers, 1984), pp. 6-33.

[2] Katanga holds 75% of the world's cobalt, and 75% of the world's industrial diamonds, as well as tantalite, copper, maganese, gold, palladium, cadmium, niobium, and wolfram.

[3] Irving Kaplan Editor, *Zaire. A Country Study* (Washington, D.C.: American University, 1979), pp. 359-80.

Elisabethville. Leopoldville was the political center of the colony. Elisabethville, administrative center of Katanga, was the center of European colonization in the Congo. Wealthy colonialists in Elisabethville always felt that too much of the colony's wealth was siphoned off to support the vice-regal pomp of Leopoldville. Due to its mineral wealth, Katangan per capita income was higher, especially when compared to the rest of the Congo. Outside of the cities, the Congo was sparsely populated and covered with dense tropical jungle. The people in these regions eaked out a subsistence livelihood with some income from agricultural commodities such as rubber and bananas.[4] Unlike other colonial powers, the Belgians neither trained nor educated any natives for government roles. Belgians believed that independence for the Belgian Congo was at least thirty years away. However, by 1955 Belgium faced two underlying problems that changed this theory. The world's superpowers, the U.S. and U.S.S.R., opposed colonialism on principle, if not always in practice. Thus, Western political support for a continued colonial administration evaporated. More importantly for Belgium, changes in the world economy made colonies even less profitable than before. This removed any financial advantage previously enjoyed by the colonial power.

Colonial Congo was unique in that Belgium only stationed a few volunteer soldiers on its territory, relying on a native and mercenary force recruited in Africa for security and police functions. The bulk of the military inside the Congo was known as the Force Publique (FP), a Belgian-officered native army of some 25,000 (1,100 Belgian officers commanding 24,000 natives). Known for its discipline and harshness, it had two functions: protecting the borders of the Belgian Congo and acting as a constabulary, backing up police units. The Force Publique had an air arm that consisted of two S-55 helicopters in Leopoldville, three Alouette II helicopters, and 11 liaison aircraft split between Leopoldville and Kamina.

The Belgian army deployed its paratrooper and commando units in battalion strength from Belgium on yearly rotations. In addition to the Congo, the Belgian military also had to police the UN mandate territories of Rwanda-Urundi. The Belgian Air Force (BAF) kept only transport aircraft, mostly DC-3s and C-119s, in the colony. These aircraft were used for jump training and logistical support.[5] In 1954, the BAF, wishing to take advantage of the good flying weather in Katanga, built a large flying school at Kamina. The flying school was initially equipped with 55 T-6 Harvards, a World War II vintage propeller trainer to which they later added 18 French-built Fouga Magisters jet trainers. The school was intended to provide initial and advanced flight training and basic weaponry training. The BAF ran a weekly transport service with DC-4s from Brussels to Kamina via Tripoli, Cairo, and Leopoldsville. BAF planning called for the school to continue to operate after independence, thus aircraft and students were there in July 1960. Kamina was a large base even for the 1960s. It was designed to survive a nuclear attack.

---

[4] Merwin Young, *Politics in the Congo: Decolonialization and Independence* (Princeton: Princeton University Press, 1965), pp. 17-49.

[5] Louis-Francois Vanderstraeten, *De la Force publique a l"Armeee nationale congolaise. Histoire d'une mutinerie Juillett 1960* (Bruxelles: Grembloux, 1992). This is only comprehensive history, from a Belgian view-point, of the mutiny and the use of Belgian forces to quell the uprisings.

The base was generously laid out to house a battalion of the Belgian Para-Commando regiment and the flight school.[6]

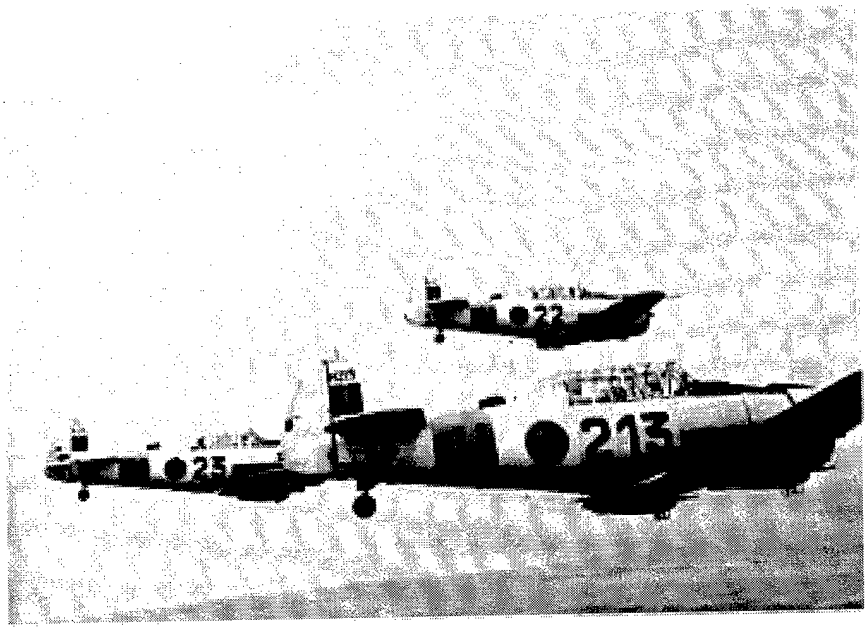

Courtesy of the Belgian Air Force

Figure 1. Belgian Air Force Harvards from the flying school at Kamina over the Congo in 1959. Flying weather and airspace made Kamina an attractive site for the Belgian Air Force.

[6] Thomas Masureel, *Beknopte historiek van de Basis Kamina* (Brussel: Koninklijke Militaire School, 1990), p. 23-41.

Figure 2. Map of the Belgian Congo with Provinces and Military bases annotated.
(Author's drawing)

Courtesy of the Belgian Air Force

Figure 3. An S-55 ex-Sabena helicopter in Force Publique service in the Belgian Congo in 1960.

Besides Kamina, the Belgians constructed another large base close to the Atlantic coast at Kitona. Located on the estuary of the Congo, Kitona safeguarded the deepwater port of Matadi and thus ensured the maritime lifeline of the Belgian military in the Congo. In 1960, at time of independence, the Belgian armed forces were withdrawn to the two sovereign area bases, Kamina and Kitona. The Belgians were allowed to keep these bases under a Treaty of Friendship between the Congo and Belgium. About 800 soldiers, mostly from the Para-Commando regiment, remained in the country together with BAF students and airbase defense personnel.[7]

The move towards independence on the African continent came in the late 1950s. Events in other parts of Africa quickly produced a dilemma for Belgium. In 1957 Britain granted Ghana independence, and in 1958 French President Charles DeGaulle announced that French African colonies could choose independence or stay in the French Union. These actions energized the native Congolese leaders into swift action. On 4 January 1959, when the first municipal elections were held, rioting in Leopoldville had to be put down with some force by the Force Publique. Fifty were killed, but most ominous in Belgian eyes, fifty Europeans were wounded in widespread looting and rioting in the European quarter of the city. This limited riot foreshadowed worse things to come. The Belgian government was shocked and forced to act. Some Belgian colonial officials in Brussels and Leopoldville hoped they could stave off total independence by granting limited political concessions. Domestic Belgian public opinion forced the coalition government in Brussels into hasty, ill-conceived, political moves which ultimately proved disastrous. After a hastily convened roundtable in Brussels, where Congolese and Belgian officials talked for the first time, an agreement was reached that Congo would gain its independence on 30 June 1960. There were no plans on how the colony would transition

[7] J. Pacco, and G. Derie, *Belgian Air Force 1946-1986* (Brussels: Tuerlinckx, 1986), pp.9-15.

to independence. More importantly, because of a lack of this type of planning, many in Brussels believed that things would stay as they were, meaning that Belgians would still be in charge. The Belgian-officered Force Publique would become the new army. Belgian managers and civil servants would continue running the newly independent state. Because of these assumptions, by both political and military leaders inside the Congo and back in Brussels, there was little or no contingency planning for a post-independence Congo. This tinderbox created by Belgium exploded after the 30 June 1960 independence celebrations.[8]

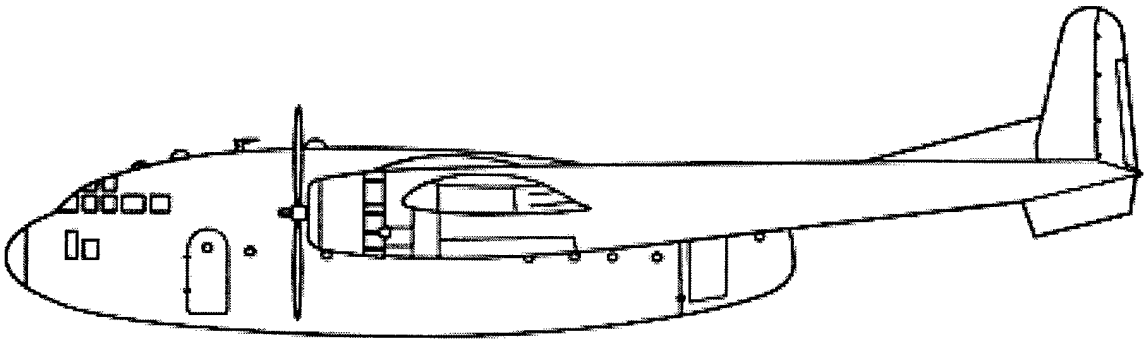

Figure 4. C-119 used by the Belgian Air Force to ferry troops and material to the Belgian Congo and for inter-Congo paratrooper drops in 1960. (This silhouette and all others in this study were drawn by Mr Daniel Armstrong, Air University Press, Maxwell AFB, AL)

[8] Howard M. Epstein Editor, *Revolt in the Congo 1960-64* (New York: Facts on File, 1965), pp. 34-36.

The First Airlift: Belgian Air Operations in 1960

Three days after independence, on 3 July 1960, the colonial army, the Force Publique, mutinied against its Belgian officers in Luluabourg, Thysville, Elisabethville, and Leopoldville. Upset that they were not materially going to benefit from independence, the native FP soldiers seized weapons and left their barracks complexes. Bands of native soldiers caused panic as they raped, looted, and murdered Europeans throughout the Congo. The bulk of the 200,000 whites attempted to flee from outlying areas to large cities or make their way to neighboring countries. About 1,690 Americans, mostly Protestant missionaries, lived in the country. The Belgian government, which had about 800 paratroopers at two bases (Kitona and Kamina) in the Congo, immediately flew in about 1,800 reinforcements on DC-6s and C-119s. This was a violation of the Treaty of Friendship which had been negotiated prior to independence at the roundtable in Brussels.[9] This in turn allowed Congo to brand Belgium the aggressor in United Nations debates about the violence. By using Belgian troops stationed in Rwanda and withdrawing NATO committed troops from Germany, Belgium was able to move 10,000 troops into the Congo by 18 July,[10] a remarkable achievement given the relatively small

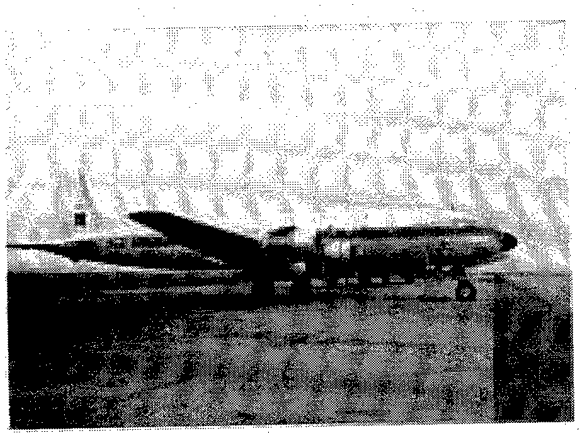

Courtesy of the Belgian Air Force

Figure 5. A Belgian Air Force DC-4 of the 15th Wing at Melsbroek, Belgium. These aircraft flew weekly shuttle missions to Kamina in the Congo prior to the 1960 hostilities.

[9] Under the treaty Belgium could only introduce more troops into the country only at the invitation of the Congolese government.

[10] The Belgian troops included five battalions of paratroopers and commandos with three companies each, and three independent paratrooper companies, for a total of 3,000 men. The remaining 7,000 men were in 26 infantry companies. On 9 July three companies of reserve paratroopers were mobilized in Belgium and moved to the Congo by the 18th of July.

size of the Belgian Air Force. When radio calls for assistance by hostages grew to a crescendo, the Belgian troops left Kamina and Kitona on 10 July and fought the rioting native troops, now renamed the Armee Nationale du Congo (ANC). To the Congolese Prime Minister, Patrice Lumumba, Belgian troop deployments looked like a colonialist coup rather than a rescue mission. On 11 July Belgian air and naval units bombarded ANC units in the port of Matadi, an incident that further inflamed the already hostile Prime Minister Lumumba, who now urged the ANC to fight Belgian invaders everywhere.[11]

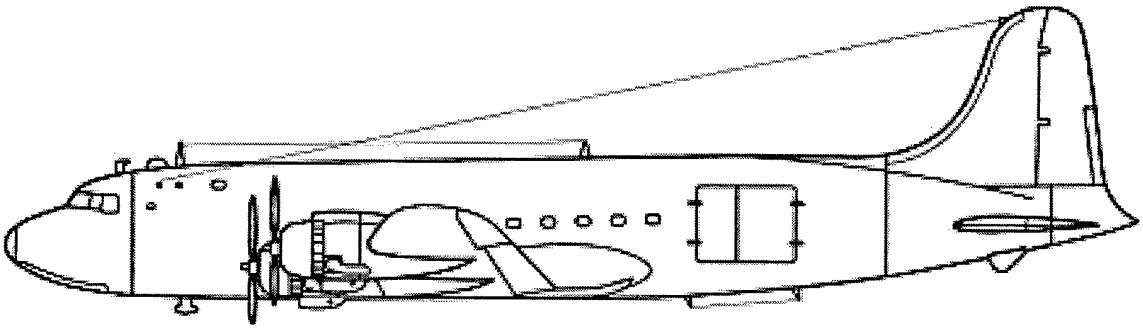

Figure 6. The DC-6s were bought by Belgium for transatlantic military traffic to the United States. These aircraft were also pressed into service during the 1960 Congo airlift and evacuation.

To complicate matters further, the Prime Minister of Katanga province, Moise Tshombe, declared that state's independence on 13 July and asked Belgian paratroopers to restore order. At the same time Prime Minister Lumumba, in Leopoldville, asked the United Nations Security Council to dispatch a UN force to remove the "neo-colonialist" Belgian forces, stop the rioting Congolese Army, and restore the territorial integrity of the Congo by forcing Katanga back into the Congo state. Simultaneous with Katanga's independence announcement, the diamond rich state of Kasai also attempted to break away from the central government in Leopoldville. These dual rebellions only intensified the civil war then starting in the Congo. On 14 July 1960 the UN agreed to send a force to the Congo.

[11] Ernest Lefever, *Uncertain Mandate. Politics of the UN Congo Operation* (Baltimore: John Hopkins Press, 1967), pp. 7-9.

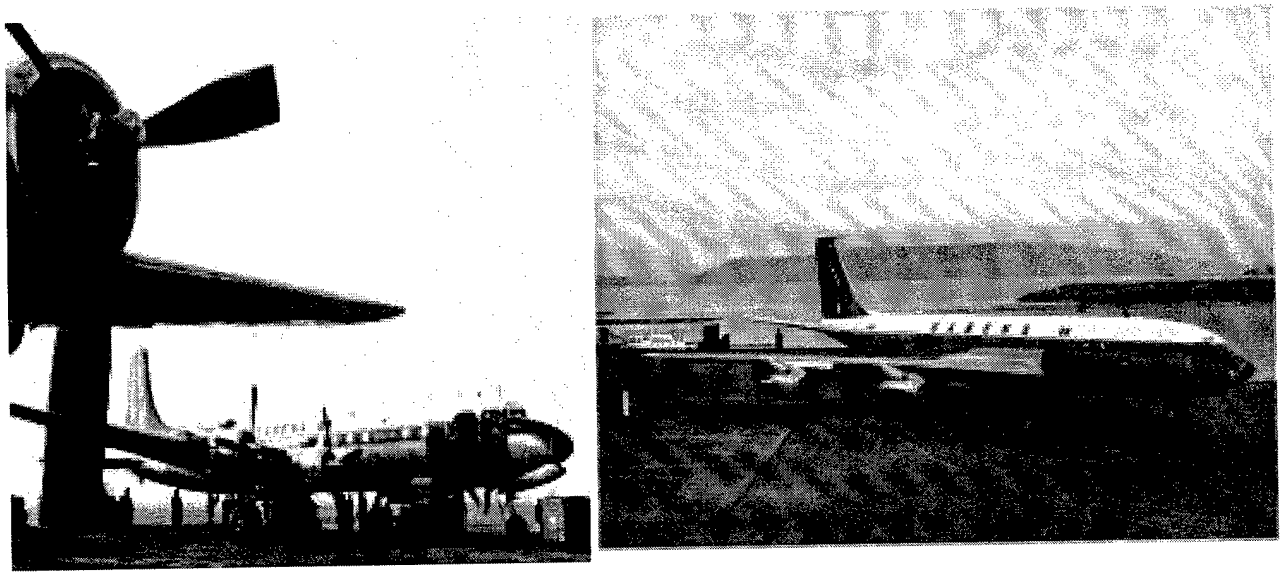

Courtesy of Sabena airlines

Figure 7. The left picture shows a DC-7 and the right a Boeing 707. Both aircraft were used to evacuate civilians from the Congo to Belgium in 1960. Sabena cancelled its transatlantic services in order to meet evacuation needs.

The Belgian airlift of troops to the Congo started from Brussels (Melsbroek) with 26 C-119Gs, two DC-4s and two DC-6s assigned to the 15th Transport Wing. Transport aircraft already in the Congo, six C-119Gs and seven C-47s, flew out refugees and were also used for internal Congo trooplifts. In order to move greater numbers of Belgian troops to the Congo, and in order to accomplish the complete evacuation of Belgians from Leopoldville to Brussels, the national airline Sabena was called upon. Answering the call for pan-African unity, Libya closed the Tripoli airport to Belgian aircraft. Kano, Nigeria also imposed restrictions. This meant that C-119Gs had to fly via Algiers, Alouef, and Douala (all French colonial bases in Africa) to reach either Kitona or Kamina. If the destination was Usumbura in the Belgian protectorate of Rwanda-Burundi then Bangui was used as a refueling stop. By 9 July Sabena was forced to suspend all transatlantic flights so that its five Boeing 707s could be used to evacuate refugees.[12] Sabena's entire long haul fleet was committed to emergency flights to and from the Congo from 9 to 22 July.[13]

[12] This consisted of five 707-320s, eight DC-7s, 12 DC-6s and one DC-4. Inside the Congo four DC-4s, four Convair 440s and 13 DC-3s shuttled the refugees to the major evacuation points at Elizabethville, Kamina, and Leopoldville.

[13] Paul Jackson, *Belgian Military Aviation 1945-1977* (Burbage, Midland Counties Publications, 1977).

Courtesy Belgian Army

Figure 8. An Alouette II helicopter used to rescue stranded white settlers from the Congo bush.

As violence against whites in the Congo increased, and lacking armor support for the lightly armed Para-Commandos, the Belgian Air Force quickly improvised. The trainers at Kamina -- Harvards, and Magisters -- were outfitted with machine guns and went into action providing support to the ground units, clearing landing zones, and protecting helicopter rescue flights. When Harvards were lost to ground fire, the aircraft began carrying bombs to attack guns. Flying peaked during the month of July as Belgian forces sought to establish positions. Belgian air operations after 8 July 1960 can be broken down into three categories: first, fire support missions for Belgian troops fighting on the ground using armed Harvards and Magisters (both trainers armed with machine guns); second, airdrop missions for Belgian paratroopers; and third, evacuation flights. The airdrop missions by Belgium involved hostage rescue or seizure of major airfields throughout the Congo. As aircraft were shot down, combat search and rescue operations were mounted by either Sycamore helicopters or Harvards. N'Djili, the international airfield outside of Leopoldville, was retaken by a Belgian air-landing operation[14] involving both Belgian Air Force and Sabena aircraft. By 13 July two infantry

[14] There are three different kinds of assault landings used by army formations: para-drop in which soldiers parachute; air-landing in which soldiers disembark from commercial or military aircraft after landing on an airfield; and assault-landing which uses C-130s or similar transport aircraft or helicopters to assault an objective by shortlanding the aircraft or repelling from a hovering helicopter.

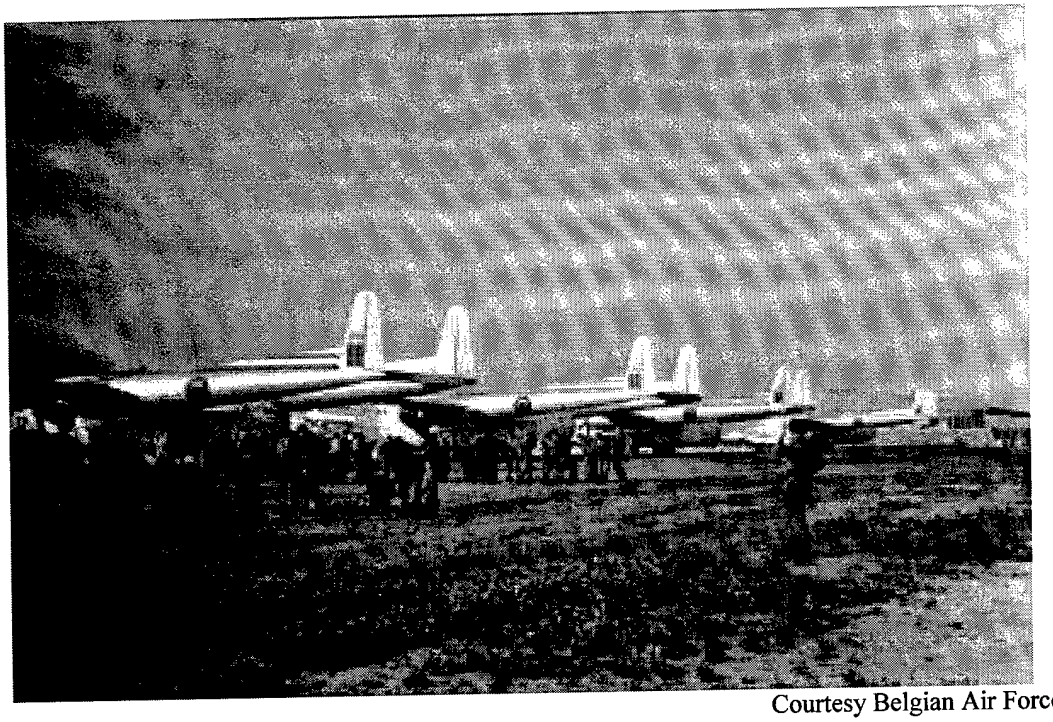

Courtesy Belgian Air Force

Figure 9. Belgian paratroopers loading onto C-119s at Kamina for another jump in the Congo, July 1960.

battalions were assigned to safeguard the international airport at N'Djili, allowing Sabena's evacuation flights to proceed. Prime Minister Lumumba urged the Congolese people to resist Belgian troop movements. Roadblocks and ambushes by native troops meant roads were insecure outside major cities. To reach besieged outlying settlements Belgians had to rely on helicopters. The BAF transported additional Alouette II helicopters from the Belgian NATO garrison in West Germany on board C-119s. These helicopters often provided the only way out for trapped whites on isolated plantations. The helicopters soon came under fire, along with escorting Harvards.

In order to conduct rescue operations, and with the hope of reestablishing some order in the Congo, Belgian paratroopers were used in small company-sized (120 men) drops. The majority of drops targeted various airfields and cities throughout the Congo where Europeans were hiding or threatened by mutinous troops. The Belgian government soon assigned the troops an additional task: disarming the native soldiers. After hostage rescue was quickly accomplished, the Belgian forces began the lengthy process of finding native troops and confiscating their arms. None of the native soldiers had remained loyal to the Belgians. While disarming troops the Belgians also secured large arms stockpiles of the former Force Publique. The Belgian officers of the former Force Publique left for Belgium or Katanga. The airborne operations of the Belgian forces were concluded quickly, a tribute to their effective maintenance infrastructure and well-trained Belgian troops (see Table 1).

Table 1. Belgian Combat Drops in July 1960[15]

Date	City	Aircraft	Unit	Type of Operation	Remarks & # saved
10 July	Luluabourg	4xDC-3 5xC-119	2 companies 1st Para	Rescue	1,200 Europeans
13 July	Bakwanga	3xDC-3	1 company 1st Para	Rescue & Disarm	115 Europeans
14 July	Kikwit	4xC-119	1 company 3rd Para	Rescue & Reconnaissance.	
16 July	Manono	2xC-119	1 company 3rd Para	Destroy ammo stockpile	
16 July	Coquilhart-ville	2xDC-3	1 company 4th Commando	Disarm Force Publique	
17 July	Goma	3xDC-3	1 company 4th Commando	Rescue	
17 July	Boende	5xDC-3	1 company Commando	Rescue	
17 July	Libenge		1 Independent Company Para	Rescue	
18 July	Banning-ville	1xDC-3	1 company 12th Infantry	Disarm Force Publique	Airland operation
18 July	Kindu	5xC-119	2 companies 3rd Para	Rescue	
18 July	Bunia	3xC-119	1 company 4th Commando	Rescue	
25/26 July	Tshikapa	4xDC-3	2 companies 1st Para	Rescue	Europeans murdered

Belgian air force operations after 15 July concentrated on keeping open lines of communications. A Belgian ground presence was maintained at airfields to allow aircraft to move across the vast country and to assist in the evacuation of refugees. Large numbers of Belgian paratroopers continued to be dropped throughout the country as rioting and inter-tribal warfare increased. Most drops were preceded by Harvards strafing the drop zone to prepare it for combat jumps. While not equipped with any heavy anti-aircraft guns (AAA), native soldiers quickly learned to use their machine guns against aircraft. Belgian Air Force and Army units from the neighboring UN trustee territory of Rwanda and Burundi were moved into the Congo to help safeguard lives and establish security perimeters in Congolese cities. Lack of radio navigation aids forced the BAF to fly low to conduct visual map reading but this tactic raised the risk of groundfire. Aircraft, especially Harvards and helicopters rescuing isolated refugees in the Congo

[15] This chart is based on data in Guy de Pierpont and Andre Lefevre, *Historique des Regiments Parachutiste SAS, Commando et Para-Commando Belges,* (Bruxelles: Groupe GO, 1977), pp. 122-149. The regimental history covers both the 1960 and 1964 operations in great detail, showing daily tactical movements during the operations.

bush, continued to be lost. Pilots and passengers were killed and dumped into rivers infested by crocodiles. Belgian Air Force losses were five helicopters and six Harvards. On 19 July a C-119 crashed after losing an engine, hitting a mountain ridge. Forty Belgians died. By 24 July the Belgian forces had been evacuated from throughout the countryside back to Kitona and Kamina bases.[16]

Figure 10. This maps shows the combat drops made by Belgian forces in 1960.
(Author's drawing based Belgian Army archive data.)

[16] Andre van Haute, "Insurrection. Belgian Air Force Peace-Keeping Operations. Congo 1960," in *Air Enthusiast*, May-June 2000, pp.12-22, has the best summary of air operations.

Intra-country airlifts continued during August as Belgian forces were shifted between new troublespots, especially in Katanga. The three Sycamore helicopters stationed in the Congo did not fare well. One was destroyed on Kamina, one in a bush fire

Courtesy Belgian Air Force

Figure 11. One of three British built Sycamore helicopters used for search and rescue around Kamina airbase. All three helicopters were lost during operations in 1960.

after an auto rotation landing, and the final one by UN forces seizing Kamina from the Belgians. During August 1960 the Belgian troops began withdrawing from all of the Congo with the exception of Katanga. Some of the Harvards were flown to Usumbura, Rwanda, and some troops were evacuated by that route also. Belgian Army Light Aviation units which had been removed from NATO garrisons in Germany were also shifted back to Usumbura. The bulk of the Belgian troops at Kamina returned home via Sabena 707s and BAF DC-6s. On 29 August a BAF C-47 carried Maj. Gen. Gheysen, the former Commander of Belgian troops in the Congo, from Kamina to Usumbura.[17]

[17] van Haute, p. 23

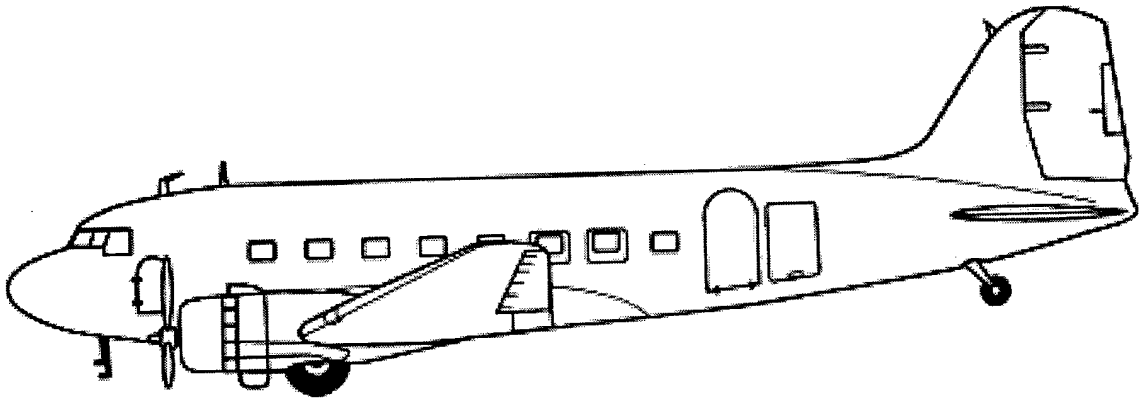

Figure 12. The C-47/DC-3 was the workhorse of 1960 air operations in the Congo. Used by the Belgian Air Force and by USAF Air Attaches from neighboring countries, these aircraft rescued hundreds of stranded whites.

By September 1960 Belgium had concentrated its forces in three areas: in Katanga around the Anglo-Belgian Union Miniere du Haut Katanga mines at Kolwezi; at Kamina; and along the railroad line that linked the mines with Portuguese Angola and Northern Rhodesia. They would remain until 1961 when UN troops entered Katanga. By that time the 15th Wing of the BAF[18] had flown 3,075 hours in sixty days on 860 missions moving 3,735 troops and 460 tons of supplies. These missions were a mix of logistics support, humanitarian evacuations, and military intervention flights. Sabena and the BAF evacuated 34,484 civilians. The five 707s alone carried over 7,000 civilians.[19]

The USAF Airlift 1960-64

In 1960 USAF presence on the entire continent of Africa was limited to operations at two bases, Sidi Slimane in Morocco and Wheelus AB in Libya. Sidi Slimane served as the forward deployment base for SAC B-47 and KC-97 operations, while Wheelus was used by USAFE aircraft as a gunnery range for Europe-based fighters. Operations in Europe were commanded by USAFE headquarters then at Lindsey Air Station, Wiesbaden, West Germany, with a majority of the USAFE airlift bases in France. European Command was headquartered at Camp de Loges outside of Paris.[20] Military Air Transport Service (MATS) rotated a squadron of C-124s to Rhein-Main AB Germany every thirty days. It also flew logistics support routes into the Mediterranean and Middle East regions via Wheelus. Air Force airlift forces were divided along

[18] The only transport wing in the Belgian Air Force.
[19] "Historiek van de 15 Wing," http://members.xoom.com/_XMCM/tenacity/AboutUs/About002.html.
[20] "A short history of the U.S European Command: 1945-1997," http://www.eucom.mil/history/shortlist.htm.

different command lines. USAFE owned tactical airlift in theater, C-119s and C-130As, while MATS, a joint Air Force/Navy service, managed the strategic airlift assets in the U.S. After the Korean War, the Air Force faced a hostile U.S.S.R. on a global scale. Third World conflicts had not yet emerged with any intensity. The 1958 Lebanon crisis was overcome by a USAF airlift of American ground forces. Tactical airlift units were converting from C-119s to C-130s in 1960, and strategic airlift units would get their first jets, the C-135, in 1961.[21]

As violence in the Congo grew, the State Department requested that the Air Force and Navy plan for an evacuation of citizens from, and a foodlift to, the infant nation. The foodlift by USAFE assets was quickly followed by a UN Security Council-ordered trooplift. Operations for USAFE in the Congo began on 8 July 1960 when it placed C-130s of the 322nd Air Division (Combat Cargo) in Europe on alert to evacuate American citizens. As it turned out, these aircraft were not used in an evacuation. Instead, on 8 July, the USAF rerouted two C-124s flying routine MATS missions to the Congo where they picked up American evacuees. The Air Force attachés in neighboring Southern Rhodesia, Ethiopia, and South Africa dispatched three C-47s on rescue missions between 8 and 12 July. A week later, on 14 July, two C-130s from the 322nd Air Division at Chateauroux AB, France moved a combat airlift support unit (CALSU)[22] to Leopoldville.

Tasked by the JCS on the same day to begin a U.N. sponsored airlift of troops to the Congo, the air division in France organized itself for an operation that soon would be larger than the Berlin airlift of 1948-49. On 14 July the 322nd had three squadrons of C-130s operating from Evreux AB (39th, 40th, 41st Troop Carrier Squadrons) and three squadrons of C-119s based at Dreux AB, France (10th, 11th, 12th Troop Carrier Squadrons), as well as operational control of a C-124 squadron based at Rhein-Main AB, Germany which was on temporary rotation from the U.S. The air division commander exchanged assignments. The C-130s and C-124s were to be used for the Congo airlift, while the C-119s took over logistics flights in Europe. As of 14 July the 322nd Air Division (AD) had 51 C-130s assigned. Forty-five were on hand with the remainder undergoing scheduled maintenance checks. The unit also had 46 C-119s.[23]

The U.S Ambassador in Leopoldville needed rescue airlifters to safeguard U.S. lives in the Congo. To give the him some in-country lift capability, assets from Europe were transported to the Congo. On 9 July, three C-124s ferried one H-21 and three H-19 helicopters from Germany to Brazzaville, across the river from Leopoldville. The USAF also used C-124s, on 15 July, to transport small fixed-wing U.S. Army aircraft (four L-20 spotter aircraft and two U-1 Otter executive transports) from West Germany into Leopoldville. These aircraft had short take-off and landing capabilities, useful in rescuing people from isolated settlements in the bush. Increasingly frantic radio calls to embassies

---

[21] Nicholas Williams, *Aircraft of the United States' Military Air Transport Service 1948 to 1966* (Leicester: Midland Publishing Limited 1999).

[22] The CALSU in Leopoldville was composed of six officers and 50 enlisted men from operations, aerial port, maintenance, and medical career fields. It was augmented by a U.S. Army signal company of three officers and 37 enlisted men. These were replaced by 2nd Airways and Air Communications Service (AACS) Mobile Squadron in September 1960.

[23] General Tarleton Watkins, "The Congo Airlift," *Air University Quarterly Review* (Summer 1961), p. 21.

in Leopoldville by isolated groups of whites forced the U.S. Ambassador to act. The U.S. Army in Europe (USAREUR) light aviation task force of helicopters and small aircraft was used to search for, and fly out, stranded refugees of all nationalities. American and other refugees were flown out of the Congo on C-130 and C-124 aircraft, as well as a C-118 that MATS diverted to assist in the Congo. The USAREUR task force aircraft were fired upon, but sustained no causalities.[24]

In order to increase lift aircraft in Europe the Air Force transferred units from the United States. On 16 July two C-124 squadrons flew from Dover AFB to Chateauroux, and on 19 July two additional squadrons from Donaldson and Larson AFBs flew to France, increasing USAF transports on hand for operations in the Congo to 45 C-130s and 60 C-124s. The operation was code named "Safari" but changed to "New Tape" on 18 July 1960 when U.N. operations began.[25]

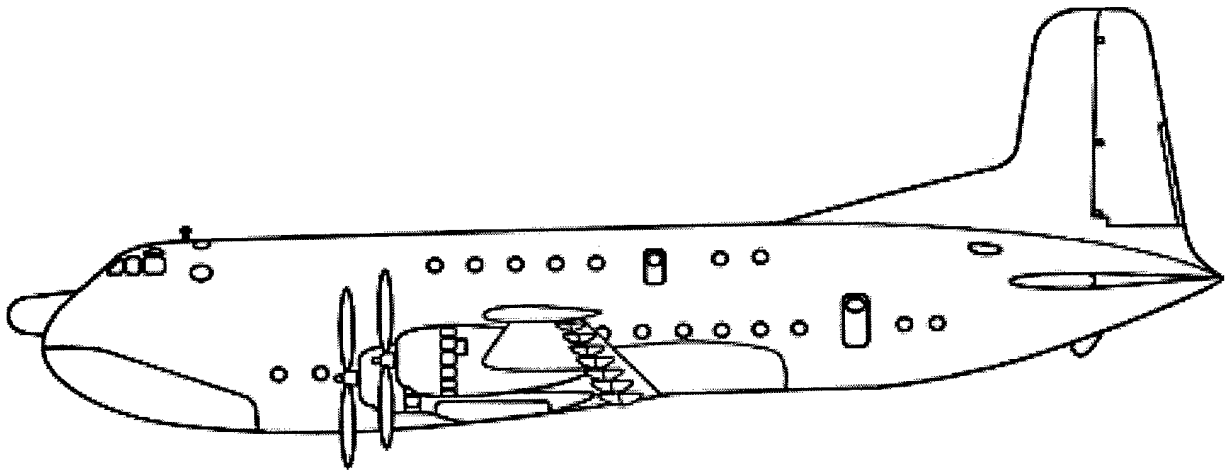

[24] Gerald Cantwell, *MATS and NEW TAPE (8 July – 30 September 1960) A Special Historical Report,* Military Air Transport Service, Scott AFB, October 1960, p.4
[25] Cantwell, p.6

Figure 13. The C-124 Globemaster provided strategic lift capabilities to the U.N. airlift and ferried most equipment, including helicopters, used during the 1960 evacuation and subsequent U.N. operations.

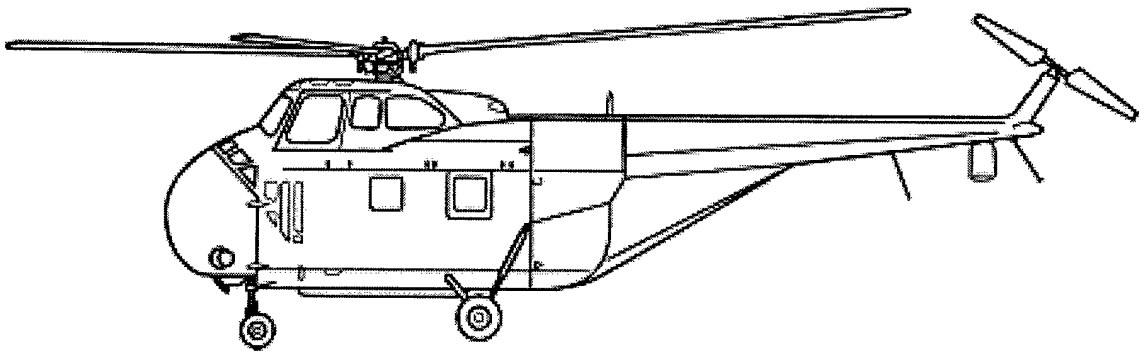

Figure 14. The H-19 (similar to S-55 commercial helicopter) was used by U.S. Army aviation units from Germany to evacuate stranded whites.

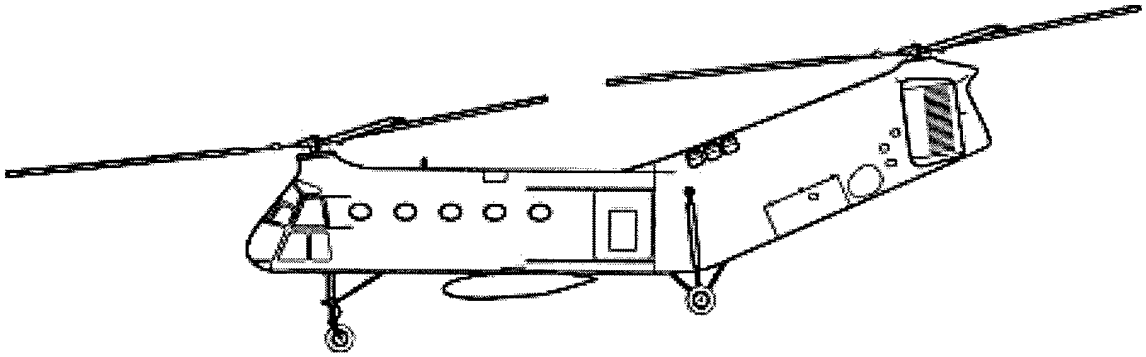

Figure 15. The H-21 was a USAF rescue helicopter flown in from Germany to provide evacuation services.

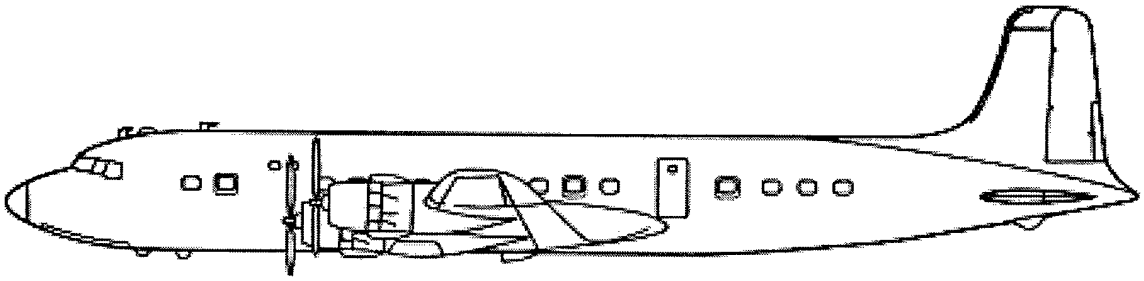

Figure 16. The C-118 was the first USAF aircraft to arrive in Leopoldville to pick up American evacuees.

The Congo airlift involved long flights. The C-130s, flying the 3,600 nautical mile route from Evreux to Leopoldville via Wheelus and Kano, averaged 33 hours flight time for the round trip. The Globemasters, flying the 4,500 nautical mile route from Chateauroux to Leopoldville around the Horn of Africa via Sidi Slimane, Dakar, and Accra, averaged 55 flying hours in four to five days. The Globemasters were slower and required more maintenance than the C-130s. Because of the vast distances separating useable African airfields, many flight legs were 1,500 miles or longer. In order to support aircrews the 322nd Air Division positioned support teams at African airfields through which USAF aircraft might pass (see map, page 25). However, the JCS limited the number of U.S. military personnel deployed to Leopoldville to 25 men. This limit was imposed after the Soviet Union protested to the UN Security Council about the number of Americans in the Congo. The Eastern Bloc charged the U.S. with supporting the "neo-colonist" Belgians. The CALSU in Leopoldville suffered because the manpower limit left them shorthanded.[26]

In the first days of the Congo airlift U.S. personnel had to organize under extremely chaotic conditions. Upon arrival on 14 July at Leopoldville's Ndjili airport, the 322nd AD's CALSU and its commander, Colonel Francis Merritt, were confronted with an explosive situation. Belgian troops had just finishing fighting the Congolese for control of the airport and the UN representatives in Leopoldville were not yet in control. Colonel Merritt took over a hangar and sent four USAF controllers to the control tower to watch over demoralized Belgian civilian controllers. The controllers averted at least three mid-air collisions as C-130 and C-124 transports, as well as U.N. traffic and Belgian aircraft, streamed into the airfield during the first 48 hours. Unable to communicate with their home base in France, the CALSU was left unaware of the U.N. trooplift until the first C-130 arrived with Tunisian troops on 15 July. The U.N. troops and their equipment were to ensure that whites could leave and that some measure of stability would return to the Congo. On 16 July a more massive troop lift started with Moroccan troops being airlifted into Ndjili. An airlift of Ghanian troops had to wait until more USAF aircraft arrived in France.[27]

A specific requirement emerged on 20 July 1960. To keep U.N. forces fed, the JCS directed CINCEUR to airlift 75,000 rations per week from Bordeaux to the Congo. Thirty-eight C-124s and C-130s moved 655 tons of U.S. C-rations by 10 August. The USAF ferried these rations to Stanleyville, Kindu, Luluabourg, and Coquilhatville for the U.N. commander. Subsequently the U.N. forces obtained rations with the help of U.S. sealift and used the transferred USAF C-119 aircraft to ferry them throughout the country.[28]

---

[26] Royce E. Eckwright, *The Congo Airlift 1960* (Lindsey A.S., West Germany: USAFE History Office, November 1960), pp. 50-54.
[27] Eckwright, p. 52.
[28] Watkins, p. 22.

Managing resources and controlling airlift assets became more difficult with each passing day. The U.S. Army mobile communications van sent from Germany burned on 17 July. Embassy circuits and public lines were used instead. Communications were the biggest headache thoughout the entire operation. There were no U.S. communications links south of the Sahara Desert, and not until more U.S. Army communications equipment could be flown in was this problem partially solved.[29] Over the next 10 days competing demands for airlift created problems, based on the U.N.'s desire to maintain a balance among the national troop contingents sent to the Congo. An additional complication arose from the prestige attached by some of the participating nations to the size of and circumstances of arrival by their troop contingents in the Congo. Local officials also continued to divert C-130s to support rescue missions or move U.N. troops into the interior of the Congo. USCINCEUR finally set priorities on 17 July in order to keep trooplift flowing. As U.N. troops were airlifted in, transports would fly out white refugees. Shuttle flights to the interior of the Congo were also conducted from Leopoldville, and the CALSU staff had to manage most of these operations without communications support.

In order to assist the Belgians in complying with U.N. Security Council resolutions (14 July, 22 July, and 9 August 1960)[30] and Congolese ultimatums, the USAF flew out Belgian soldiers and material. The initial U.S. policy, -- that is, the U.S. State Department policy in June and July 1960 -- allowed the evacuation of all refugees, but not of Belgian soldiers. These could not be moved by American assets since the U.S. wished to remain impartial in the Belgian/Congo dispute. The State Department considered the presence of Belgian soldiers in the Congo a provocation. However, with the continuing revolt in Katanga province, the U.S. State Department reversed itself, and, in August and September 1960, allowed USAF C-130s and C-124s to fly Belgian troops directly to Belgium. The JCS issued specific orders that internal Congo movements of Belgian forces would not be permitted. By September the USAF had finished the Belgian withdrawal from all parts of the Congo except Katanga, where 600 Belgian troops remained at the invitation of Tshombe. Some Belgian Air Force aircraft (Harvards and DC-3s) left behind were formed into the Force Aerienne Katangaise/Katangian Air Force (FAK). In order to help relieve the Belgian Air Force transport aircraft deficit, the USAF transferred six C-119s from Dreux. The BAF used the C-119s to move troops and equipment out of the Congo to Rwandi-Burundi.[31]

The U.N. Security Council resolution of 14 July 1960 authorized Secretary General Dag Hammarskjold to send a U.N. military force to the Congo to restore order.

---

[29] 322AD, *History 1 July 1960-31 December 1960* (Chateauroux AB, France: January 1961), Commander's Summary.

[30] Ernest Lefever, *Crisis in the Congo. A United Nations Force in Action* (Washington, D.C.: The Brookings Institution, 1965). The first resolution on 14 July 1960 gave the Secretary General the mandate to restore order. The 22 July 1960 resolution ordered the withdrawal of Belgian forces. The 9 August 1960 resolution asked for a speedy withdrawal of Belgian forces. By September 60, with the exception of Katanga, Belgium complied. On 21 February 61 an immediate withdrawal of Belgian forces from Katanga was requested, and Belgium was subject to censure on 15 April 61 for failing to cooperate with the U.N. in Katanga with regard to withdrawal of support to the Tshombe regime.

[31] Eckwright, pp. 76-77.

The ONUC (Force de L' Organisation des Nations Unies du Congo) was set up under Swedish Maj. Gen. Carlson who had run the UN force in the Sinai since 1956. The Secretary General also asked for airlift support from the Soviet Union, United States, and Great Britain because the troops needed to get to the Congo in 48 hours to fill a developing power vacuum. Ghana's British "seconded" Chief of Staff Maj. Gen. Henry Alexander, was the first U.N. officer on the ground, having flown into Leopoldville on an RAF Comet from Accra, Ghana. The RAF used Comets, Britannias, Beverleys, and Hastings to move Ghanian troops from Accra to Leopoldville.[32] The previously mentioned 322nd Air Division force of 132 C-130 and C-124 transports bought in 4,000 troops by 18 July. By 30 July the majority of 10,000 U.N. troops were ferried in by USAF transport. The Soviet Union contributed nine IL-14s to Leopoldville. Prime Minister Lumumba used them to ferry his troops to quell the rebellion in Kasai. They never took part in any UN-approved operations. The Italian Air Force contributed C-119Gs and the RAF sent two more Hastings from Britain to move Ghanian troops into the Congo.[33]

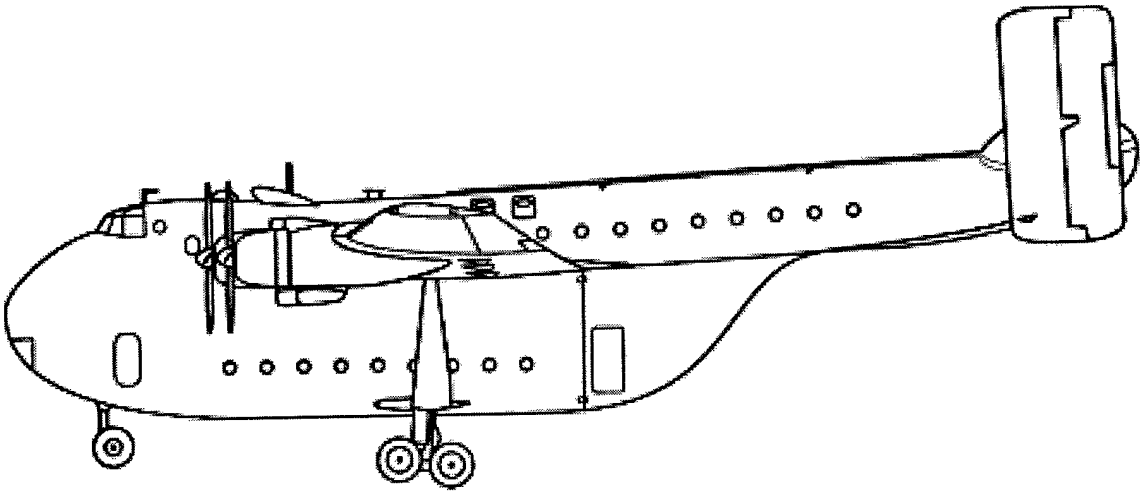

Figure 17. Royal Air Force Beverley one of the transports used to move Ghanaian troops to the Congo.

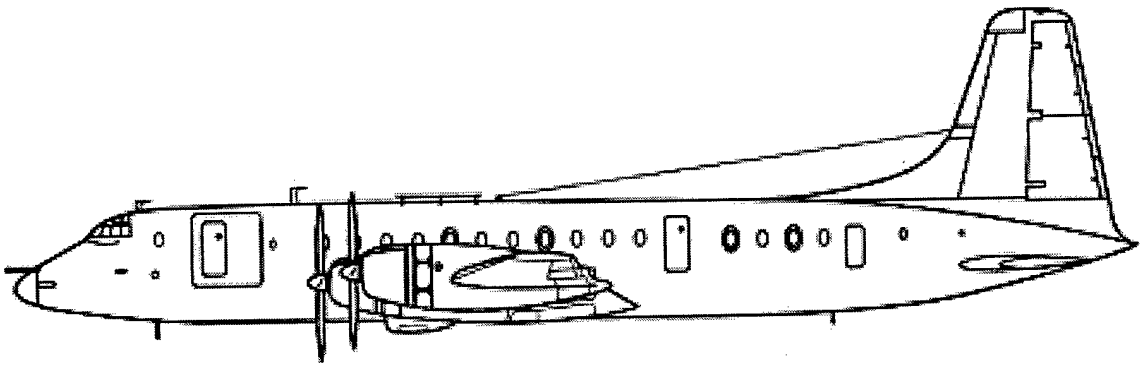

[32] Comets were from 216 Squadron, Britannias from 99 and 511 Squadrons, Beverleys from 30 Squadron, and Hastings from 114 Squadron.
[33] Lefever, p. 141-52.

Figure 18. Royal Air Force Britannia a long range transport used to move Ghanian troops and their British officers to Leopoldville

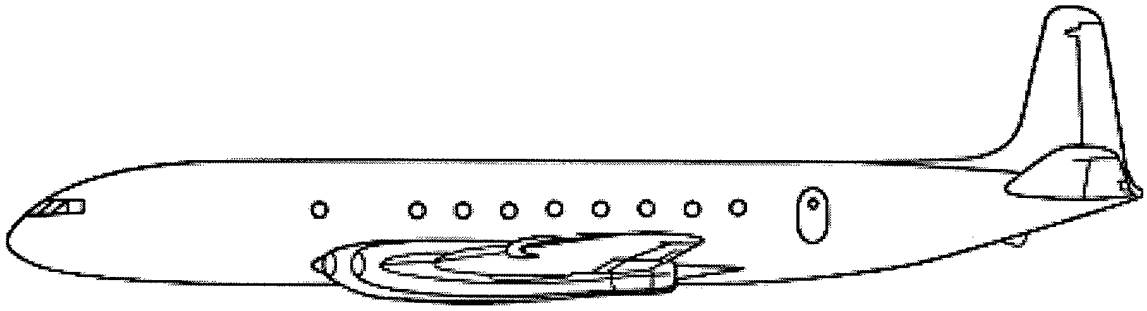

Figure 19. Royal Air Force Comet jet transport used to ferry troops to Leopoldville.

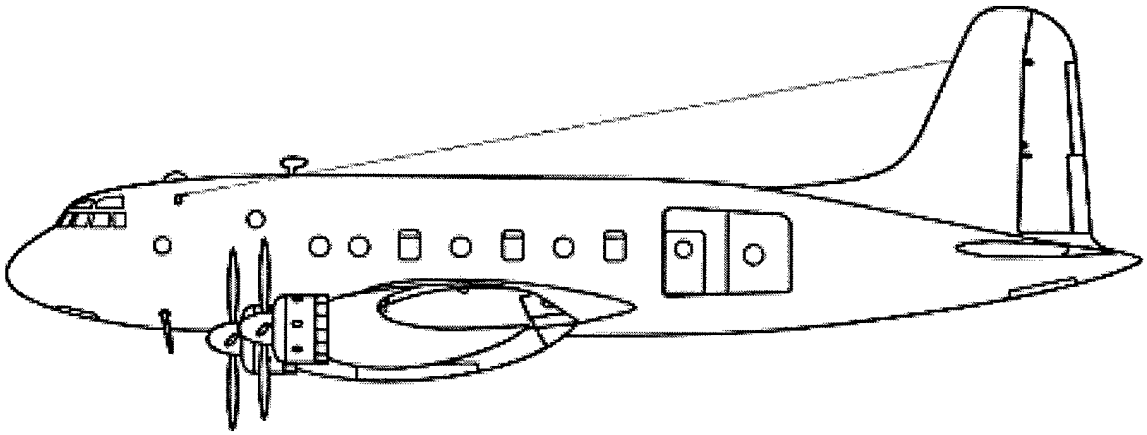

Figure 20. A Royal Air Force Hastings used to ferry troops to the Congo.

The U.N. forces in the Congo required other U.S. assistance. Transport aircraft were one of the first priorities since the U.N. forces in the Congo had no organic airlift assets. Ten C-47s were supplied from USAFE stocks. Five C-119s were also transferred to the U.N. in July 1960. The U.N. had to find crews for these aircraft. Canadians, Norwegians, and Italians were part of the initial cadre. Later 34 countries contributed crews. Light U.S. army aviation assets, such as H-13 helicopters and aircraft already in the Congo searching for American civilians, were also transferred to the U.N. with spare parts. The US Army crews returned to Germany. Flying the aircraft was a U.N. responsibility. During late July 1960, Norwegian and Swedish light aircraft were airlifted by USAF C-124s for the U.N. Force. More American Army helicopters were supplied from stocks in Europe. In order to keep the aircraft flying, spare part requests were sent to U.N. headquarters in New York and from there to the U.S. State and then Defense Departments in Washington, D.C. From there they were transmitted on to Wiesbaden

AB, Germany for C-47 and C-119 requests, and to Sandhofen Depot, Germany for U.S. Army light aviation assets.[34]

Anxious to minimize superpower involvement, the U.N. quickly decided to create its own air transport network. The U.S. government only allowed a few USAF transports to make intra-Congo airlift flights. These restrictions were imposed for security reasons, and due to AAA damage sustained by some aircraft. The U.N., needing its own distribution network for resupply and personnel transfers, ultimately organized four squadrons in the Congo: 20 C-47s in 1st Squadron; six C-119s in 2nd Squadron; eight Otter/Beavers in 3rd Squadron; 16 H-13 and H-19 Helicopters in 4th Squadron. This entire air group was commanded by Canadian Air Commodore J. Carpenter and air operations were managed by Canadian military personnel, with air crews provided by a variety of UN member countries.[35] When the four squadrons listed above were overwhelmed by transport demands, a fleet of DC-4s was leased by the U.N. from international operators. The USAF controlled the international airlift into and out of Leopoldville, while the U.N., with attached Canadian air traffic controllers improvised an air traffic control system within the Congo.

Other countries dispatched national contingents that then came under U.N. command -- for example, the Swedish Voluntary Air component flew in SAAB J29 fighters to establish air superiority over Katanga. The Swedish contribution of fighters was all the more remarkable because the Swedish Air Force was not equipped, organized, or trained to fight overseas for prolonged periods. In spite of this it managed to maintain a 90% serviceability rate while flying out of Luluabourg and Kamina. The Swedes were sent at the request of the Secretary General, Dag Hammarskjold, who needed an impartial nation to supply air superiority fighters.[36]

USAF Operational Challenges 1960-64

Operations over such a large area as Africa required changes in flight operations to meet schedules. Extra maintenance personnel were flown to Evreux to augment existing units, and units had to be flown to all the staging bases throughout the continent to set up operations. Communications were virtually non-existent between Evreux and the airfields in Africa until mobile single-side-band radios were installed at key points days after the start of the airlift. Prior to the airlift only the two airbases at Sidi Slimane and Wheelus were tied into the SAC/USAFE "Twilight" HF system. USAFE authorized the airlift to use the "Twilight" system and installed permanent stations in Chateauroux,

---

[34] Eckwright, p. 76-77.

[35] *History of the Brazilian Air Force,* http://mat.ufrgs.br/~rudnei/FAB/eng/fabnocongo.tml p. 3, this site as an excellent set of accounts of UN air operations in the Congo from 1960 to 1964.

[36] Office of the Secretary General (New York: UN Headquarters Papers, 1961), p.723.

Kano, and Leopoldville. The USAF positioned mobile stations throughout Africa as required. Normally the 322nd Air Division maintained contact via hourly radio calls with its in-flight aircraft. Since the network did not extend into Equatorial Africa, there were command and control problems as for a time aircraft simply "vanished" from contact with Eureux. Inadequate communications also meant that aircraft diverted within Congo to pickup refugees would drop out of the transport system, making planning efforts in Eureux difficult. Aircrews flew into totally unfamiliar territory where navigational aids were less than ideal and weather reports were unreliable. In-flight navigation was a challenge. Celestial navigation had to be used, as the lack of terrain features or large cities made visual and radar navigation techniques almost useless. Celestial navigation over the Sahara was often hampered by intense desert wind storms that blew up dust so thick it obscured the stars from aircraft flying at altitudes up to 10,000 ft. Weather forecasting used an Air Force center at Torrejon AB, Spain which predicted what weather should be encountered in theory, rather than through observed conditions. This did not change until a forecaster deployed to Leopoldville and set up teletype links with intermediate airports and his home station. Flight planning was further hampered by the lack of charts, information on instrument approaches, and procedures for airfields. Since the 322nd Air Division's area of responsibility extended only to 20 degrees north latitude in Africa, few flight planning maps or charts were available. Air to ground communications were poor since towers were only sporadically manned and controllers spoke only French. Large portions of the flights were flown without controller contact.[37] During the first three weeks, airlift operation aircrews were flying crew days of 30 to 40 hours, with but 12 hours crew rest, before being sent out on another mission. Aircraft were so thoroughly utilized that at one time only five of the 46 C-130s were available at Evreux, the home station.

The RAF assisted in getting Ghanian soldiers to the Congo because the newly independent nation of Ghana still relied on Britain, its former colonial power, for airlift. Opposition to the U.N. operation among Western countries such as France and Great Britain meant that the USAF provided the majority of airlift necessary to deploy and maintain the U.N. troops in the Congo. British mining interests in Katanga and French colonial wars in Algeria meant that neither of these nations was interested in helping with the U.N. operation in the Congo. The British government under Prime Minister MacMillian had to tread carefully since members of his own party had neither forgotten nor forgiven the humiliating Suez experience. France was in the end stages of the Algeria war and did want to see the U.N. force put an end to colonial possessions or impose a settlement from New York.

[37] Eckwright, p.97.

The Congo Airlift Route System, 1960

(Statute Miles Shown)

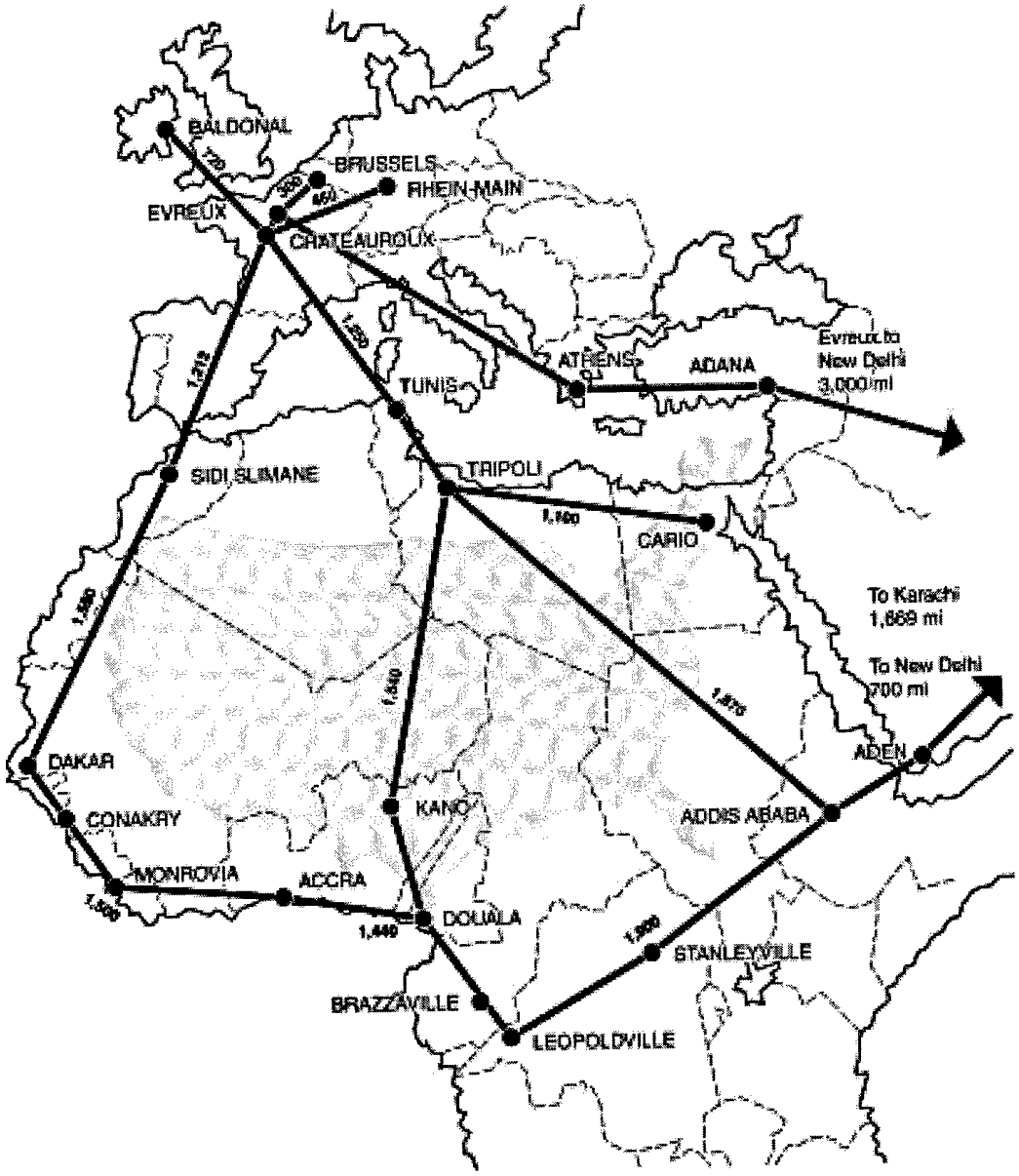

Figure 21. This map shows the intricate network of routes flown by USAF aircraft, thus giving the reader a better appreciation of the distances flown. The United States is superimposed over the African continent in the small scale.

The airlift was a large and complex operation, different from any previous Air Force operation. The large number of staging bases used contributed to the immensity and intricacy of the airlift, that included 52 airfields in 33 countries. Several airfields presented operational problems. C-124s could not stage out of Addis Ababa because of the field elevation of 7,749 feet, and could not land in Coquilhatville because of insufficient runway length. Maintenance requirements doubled in spite of the fact that the 322nd Air Division was responsible only for C-130 maintenance. The C-124s received their maintenance support from Military Air Transport Service (MATS). Geared to meet a commitment of 2,000 flying hours a month, the 322nd had flown 4,100 hours in the first month of the 1960 airlift. A maintenance team was established at Wheelus, which eliminated the need for C-130s to return to Evreux every 50 flight hours for inspection. To keep both C-130s and C-124s operational two C-124s were designated repair birds and each carried five man teams together with C-124 or C-130 spare parts, including an engine and propellers.[38]

Fuel was another problem, with limited choices available in Africa. The C-124 used aviation fuel 115-145 with 100-130 as the only alternate grade. The situation for the C-130s was somewhat better. The C-130s, although optimized for JP-4, can utilize any grade fuel with only a minor reduction in operating efficiency. There were other problems as well. Obsolete refueling equipment at intermediate stops hindered air operations since many aircraft had to wait and, in some cases, required hand pumping from 55-gallon drums. At intermediate stops such as Kano, Nigeria fuel storage presented a problem, as the large number of C-130s and C-124s, plus scheduled commercial traffic, soon exhausted the fuel supply. Resupply via a 550 mile railroad was a slow process. Therefore, in order to keep the airlift going, flights were routed via Dakar or Accra where fuel was more plentiful and could be resupplied more easily from the coast.[39]

At Leopoldville, the fuel situation was bad from the start. The primary problem was that Sabena Airlines, engaged in both a Belgian trooplift and refugee evacuation operations, attempted to control all POL supplies at the international airport N'djili. In addition, there was Belgian resentment against the USAF which was no longer seen as a NATO ally but rather as a U.N. enforcer. This feeling was echoed by Sabena which threaten contract losses against oil companies that supplied the USAF with fuel in Leopoldville. The CALSU in Leopoldville ordered most aircraft to refuel either in Brazzaville or in Accra. The fuel pit allocated to the USAF was small and required USAF aircraft to reverse pitch their propellers to back into the fuel pit.[40] High fuel usage and the need for staging bases required the use of non-traditional means. The United States replenished aviation stocks in Accra and Dakar using the aircraft carrier USS *Wasp,* and a Navy oiler put 115-145 aviation gas back into those fuel farms. Contingency planning by the USAF in mid-August 1960 staged KC-97 tankers into Dakar. They stood alert to ensure fuel reserves for the Congo airlift, but never had to be used.[41]

---

[38] Thomas Ofcansky, *Congo Airlift* , *Airlift*, (Summer 1963), pp. 22-25.
[39] Watkins, p.23.
[40] 322 AD, p.46.
[41] Eckwright, p.105.

The airmen also took measures to ensure adequate maintenance. The 322nd Air Division moved an advance maintenance element to Wheelus AB, Libya in order to save a 10-hour round trip back to Evreux, France for post-flight inspections. The USAF deployed aircraft maintenance jigs and parts allowing for more flight hours to be flown on the African continent.[42] One unexpected problem centered on tires. During the airlift, C-130 operations from shorter runways such as Goma and Kindu quickly drained the tire stocks in France. The tire cuts and bruises escalated very rapidly as the C-130s left the main Wheelus-Kano-Leopoldville route. Tire usage increased when runways were not kept clean of debris. The Congo airlift was fortune in that previous C-130 propeller problems did not plague this airlift. After-action reports all cite the work done by the depot at Warner-Robins AFB in fixing this problem. Since a built-up propeller took up a third of the cargo space in a C-130 this was a major relief. The lack of communications to Evreux was a handicap for the maintenance effort, because parts and work could not be coordinated with home base.[43]

The C-124s also encountered unique problems. MATS had to rotate its C-124s back to CONUS for their 200-hour checks, which meant that some aircraft arrived in theater with little time for the African airlift before they had to return to the States. In addition, 20 hours had to deducted from the C-124s, maximum in-theater flying time to get them back to CONUS. Only the rotational squadron at Rhein-Main had the capability to accomplish their own inspections. In spite of USAFE requests, MATS insisted that its rotational schedule was fine and did not change it throughout the Congo airlift.[44]

The flight safety record of the 1960-64 operations was remarkable. There were two minor C-130 accidents, both tire blowouts, which required follow-on maintenance in France. One C-124 suffered a nose wheel collapse and needed 591 maintenance man hours of work, nine shy of a major accident classification. The most serious USAF incident had nothing to do with aircraft mishaps. On 27 August an augmented C-124 crew of fourteen was severely beaten in Stanleyville. Some members suffered fractured skulls and broken limbs. The exact motive for the beatings was never determined. As a result, crews were ordered to keep their personal firearms available for use, but out of sight. Force security was as important then as it is now. Requirements for USAF airlift to the Congo operation were reduced in September 1960 as the UN forces began to get established in the country.[45]

USAFE's 322nd Air Division exercised operational control over Congo missions until October 1961, when MATS assumed responsibility. Operations were still directed from France by MATS, and the aircraft used in the airlift did not change either. But staff and support work shifted from being a theater responsibility (USAFE) to MATS.[46]

---

[42] Watkins, p. 26.
[43] Eckwright, p. 104.
[44] Cantwell, p. 12.
[45] Eckwright, p. 114.
[46] Joseph Tustin, *USAFE Humanitarian Missions 1945-1960* (Historical Division, HQ USAFE, January 1963), p. 48.

Lessons Learned

During the three and half years of the first USAF Congo airlift, a total of 2,310 missions were flown which moved 63,884 personnel and 37,202 tons of material from 33 different countries a total of 25 ½ million miles.[47] This remarkable achievement led to some important changes and purchases for airlift forces. The airlift did prove the need in the Cold War for a military transport fleet that could be used in combat and non-combat situations to fulfill U.S. policy goals without having to use civilian contract airlift. The C-141, the next jet transport for the USAF, was developed and ordered in larger numbers, allowing the Air Force to meet strategic airlift needs. Two other maintenance features developed by the USAF airlift units were mobility kits and enroute maintenance kits to give the airlift force better capabilities in future crises.

The sudden necessity of operating in unknown portions of Africa and the lack of communications made precise planning impossible from the 322nd AD headquarters in France. This lack of planning, and the absence of a steady cargo flow like that during the Berlin airlift, led to a mismatch of resources and flight delays of some U.N. contingents, in turn causing diplomatic problems. The 322nd AD itself had to initially operate under some self-imposed handicaps. There was a runway resurfacing project in France, the entire maintenance structure was being changed to conform with AFR 66-1,[48] and the post-flight and periodic maintenance schedule for C-130As was being changed.

The Air Force and JCS were frustrated at not having any timely command, control, and communications links during the Congo airlift. With the potential for similar contingencies in the Third World lacking a communications infrastructure, the Air Staff in 1960 drew up a requirement for a project named "Talking Bird." This system, configured with teletype, voice, data, and encryption equipment loaded on a C-130, would give a military unit the capability to communicate from anywhere in the world. The C-130 was considered ideal because of its short take-off and landing (STOL) characteristics, and its ability to carry 18,000 pounds of communications equipment and a 21-man team.[49]

---

[47] Harry Heist, *Briefing on the Congo*, Air Mobility Command Museum Archives, Dover AFB.

[48] The new organizational structure moved the aircraft maintenance establishment from the individual Squadrons to the Wing, in an attempt to operate more efficiently.

[49] Tom Hildre, *Talking Bird: A Hercules by Another Name,* http://www.theaviationzone.com/facts/c130tbird.htm, and Eckwright, p.100.

Figure 22. Rebellions against the central government in Leopoldville, 1962-63.

Support to U.N. Operations against Katanga, 1961-1964

The break away state of Katanga continued to defy both the central government in Leopoldville and the U.N. Security Council which had urged its re-integration into the Congo state. This stalemate continued as the leadership of the United States and the U.N. General Secretary changed. Congo was also beset by other insurgencies in the eastern half of the country, which involved aircraft and resulted in U.N. causalities. In one case, 14 Italian airman flying a C-119 into Stanleyville were brutally killed.

The situation became more serious when Moise Tshombe, the leader of Katanga, bought an air force and white mercenaries to help fight off the U.N. and the central government forces from Leopoldville. The air force consisted of a wide variety of airframes: Fouga Magister armed trainers from France, Vampire fighters from Portugal, and an assortment of light transport aircraft from South Africa, plus aircraft left behind by the Belgians. Mercenaries included ex-French Foreign Legion paratroopers from the 1st Regiment Etrange Parachutiste (1. R.E.P.) which had been disbanded in disgrace in Algeria after a mutiny. Also known as the Katangan Gendarmerie, these formations would continue to play a major role in conflicts in the Congo and later Zaire.[50]

While the U.S. government refused to provide intra-Congo airlift, it still managed the strategic airlift and rotation of U.N, units into the Congo. There were two reasons for this. The U.S. wanted to minimize involvement in an unpopular U.N. operation, and Tshombe did have American backers. As the central government in Leopoldville continued to waiver between socialism and communism, the U.S. was eager to stabilize the country without East Bloc involvement. Thus, the U.S. did not want to remove Tshombe all together since he could still be helpful to U.S. and Western interests. In addition, Washington went out of its way to ensure that the Cold War raging in other parts of the world would not spread to the Congo. President Kennedy, eager to remove this potential East-West hot spot sent the Columbine III, a VC-121E Air Force Presidential VIP transport, to get Tshombe to talk to central government leaders, but to no avail.[51] Tshombe refused to relinquish independence and accept the authority of the central government. The harassment of U.N. peacekeepers continued, especially in Elisabethville with lives being lost on both sides. A Fouga Magister flown by a Belgian mercenary pilot harassed U.N. operations to such a point that Wayne Federicks, a U.N. administrator who had been in SAC remarked: "I always believed in air power, but I never thought I'd see the day when one plane would stop the United States and the whole United Nations."[52]

---

[50] Epstein, p. 114-19.

[51] This aircraft had served as Air Force One for President Eisenhower. President Kennedy used a VC-118 while waiting for the first VC-137 to be delivered. This gesture went unrewarded by Tshombe.

[52] Richard Mahoney, *JFK's Ordeal in Africa* (Oxford: Oxford University Press, 1983), p.100.

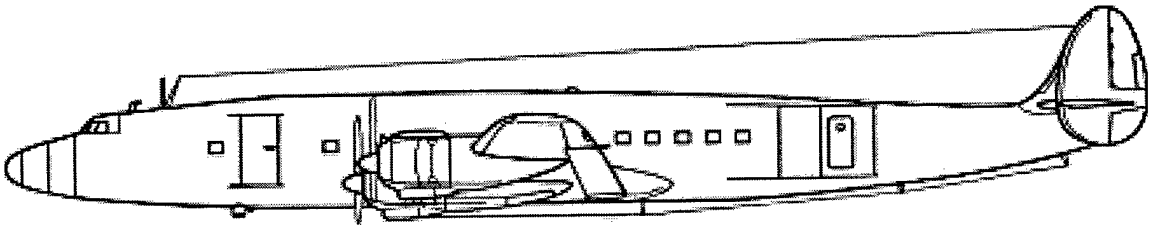

Figure 23. A USAF C-121. The VC-121 was a presidential transport based at Andrews AFB with 89th Wing.

President Kennedy, frustrated with Tshombe's actions and worried about U.N. credibility – together with pressure from other Third World leaders such as Prime Minister Nehru of India -- allowed twenty-seven C-124s of the 63rd TCW to move U.N. military personnel and hardware to Katanga. This USAF airlift, in turn, allowed the U.N. to finally subdue Tshombe's independence quest. In addition to the C-124s, C-133s from the 1607 ATW airlifted nine Swedish J29 fighters and two S29C reconnaissance aircraft to Leopoldville so that the UN would have an air force to deal with Katangan air force fighters. Flown from Kamina, together with Indian Air Force Canberra bombers, they devastated Katangan bases and strong points. The Indian Air Force Canberras self-deployed to the Congo. Indian Air Force maintenance and support crews were airlifted by four C-124s. By January 1964, fighting in Katanga had ceased, and by 30 June 1964 the U.N. had withdrawn from the Congo. Tshombe went into exile.[53]

The chief lesson of the U.N. operations in Katanga was that, even in insurgencies, air superiority is required if ground-based counter-insurgency operations are to be successfully attempted. The complex political background of this U.N. operation is outside the scope of this study, but the fact remains that the U.N. could not move sufficient troops to Elisabethville until all Katangan aircraft were destroyed.

[53] Robert Craig Johnson, *Heart of Darkness: The Tragedy of the Congo 1960-67,* http://worldatwar.net/chandelle/v2/v2n3/congo.html.

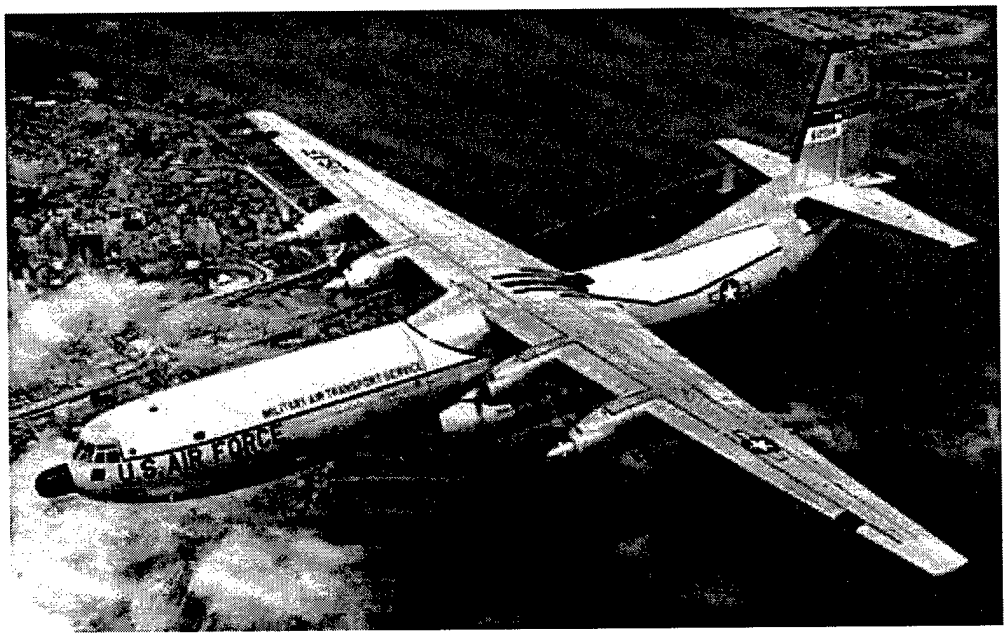

USAF Photo

Figure 24. A C-133 assigned to Travis AFB overflying the San Francisco Bay with the Oakland Bay Bridge in the background. The USAF had 50 of these large transports.

1964 Stanleyville Paulis Operations

The administration in Washington changed with President Johnson's assumption of power. He was not as eager as President Kennedy to intervene or devote any large-scale effort to an African conflict. But events in the Congo soon forced the Johnson administration to act. The U.S. strategic aims were to strengthen the central government and keep out any Soviet or Soviet proxy forces in the Congo. Insurgencies against the central government in Leopoldville did not end with the withdrawal of U.N. troops on 30 June 1964.[54] The U.S. supplied military aid to the Leopoldville government. American allies also were pressured to help the fledging country. Italy provided a squadron of T-6s and began training Congolese pilots.[55] The Belgian government also cooperated with the central government to ensure its access to the mineral wealth of Katanga. In addition, Brussels was concerned for the safety of technicians who returned to help the infant state function.

[54] A USAF C-135 flew home the last Indian troops ending 3 ½ years of "New Tape" missions.
[55] Fred Wagoner, *Dragon Rouge. The Rescue of Hostages in the Congo* (Washington D.C.: NDU Press, 1980).

In January 1964 Christophe Gbenye, an associate of former radical Prime Minister Lumumba, started an insurgency in the eastern half of the Congo. The "Simbas," as the rebellious group came to be known, quickly defeated the ANC, the central government's army, and took hundreds of Europeans and Americans hostage. Facing total state collapse, the Leopoldville government recalled Moise Tshombe, the former Katangan sessionist leader from European exile, to become Premier of the Congo. With "Simbas" continuing their advance and committing atrocities, the American Ambassador in Leopoldville, McMurtrie Goodley, cabled a warning to Washington. On 4 August 1964 Stanleyville, the only large city in eastern Congo, fell to the rebels and the American consulate was seized the next day. With this battlefield success, over 2,000 whites entered an unknown fate at the hands of juvenile rebels. Congolese in Stanleyville who were identified as part of the Leopoldville government were tossed to crocodiles. Brutality continued unchecked as bands of "Simbas" slaughtered and ate their victims.[56] With four State Department employees plus other whites held hostage, the United Sates faced a crisis.

Figure 25. 1964 rebellions against the central government in Leopoldville

[56] Maj. Thomas Odom, *Dragon Operations: Hostage Rescues in the Congo 1964-65* (Ft. Leavenworth, KS: USACGSC, 1988).

The Johnson administration was focusing its attention on another part of the world. On 4 August 1964 North Vietnamese PT boats attacked the USS *Maddox* in the Gulf of Tonkin, and the administration, working on getting a congressional resolution, did not need any distractions. President Johnson was also fighting for reelection and did want any American operation in the Congo to jeopardize his campaign and become an election year issue. Since the President was occupied, McGeorge Bundy, Johnson's National Security Advisor, and Ambassador Averell Harriman, Undersecretary for Political Affairs, would end up playing pivotal roles in this crisis. Both men and the entire D.C. policy and military establishment were bedeviled by the fact that there was no good intelligence as to the location of the Americans, or which ones were alive or dead. While Belgians were not initially threatened, Foreign Minister Paul-Henri Spaak of Belgium did agree with the U.S. to increase the number of Belgian military advisors in the Congo. Tshombe, who had learned the value of white mercenaries while seeking Katangan secession, quickly began recruiting in Africa and overseas to build a cadre of white mercenaries who would help the ANC fight the rebels.[57]

The "Simba" rebels were quick to seize Americans in Stanleyville because they believed they were being bombed by USAF planes. In reality the CIA had set up a small operation that used T-28s to strafe and to support ANC columns as they fought their way back into rebel-held territory. Cuban exile pilots who had been part of the Bay of Pigs invasion attempt flew six T-28s. As soon as they became available in September, B-26s were added to this CIA air force. H-21 helicopters and C-47 transports supported this CIA air force. In addition, the Congolese Air Force was equipped with twelve T-6Gs (Harvards) had been donated by Italy at the request of the U.S. In order to improve morale in Leopoldville and to keep the Tshombe government in power, Ambassador Goodley requested the U.S. Strike Command, headquartered at MacDill AFB, to dispatch a force to rescue American hostages and to "show the flag." Strike Command (STRICOM) under Gen, Paul Adams (USA) had prepared an OPLAN to deal with just such an operation. In light of events in 1960 the JCS had established a unified command plan which made STRICOM responsible for the African continent. The command term STRICOM was changed to U.S. Commander in Chief Middle East, Africa and South Asia (USCINC MEAFSA) when the term Strike Command was found to be offensive in the Third World.[58]

On 11 August the Joint Task Force Leopoldsville (JTF Leo) stood up and deployed to the Congo. Its goal was to rescue the American state department employees trapped in Stanleyville. This quickly proved to be impractical since American missionaries could not be left behind in rebel-held territory. The JTF's mission was severely curtailed as President Johnson and McGeorge Bundy feared that a creeping commitment in the Congo could hurt election campaigning and ruin support for a Gulf of Tonkin resolution in the U.S. Senate. JTF Leo was commanded by Col. Robert Teller (USMC) who also acted as CINC STRICOM representative in the Congo. It consisted of

---

[57] Guy Arnold, *Mercenaries. The Scourge of the Third World* (New York: St. Martin's Press, 1999), pp. 8-17.

[58] Jay E. Hines, *Confronting Continuing Challenges: A Brief History of the United States Central Command,* http://www.centcom.mil/what%20is/history.htm.

four C-130Es (464th Troop Carrier Wing, Pope AFB), a rifle platoon (504th Airborne Infantry, Ft. Bragg), and three CH-34 helicopters (11th Transportation Company, Nellingen, FRG) for a total of 28 officers and 98 men.[59]

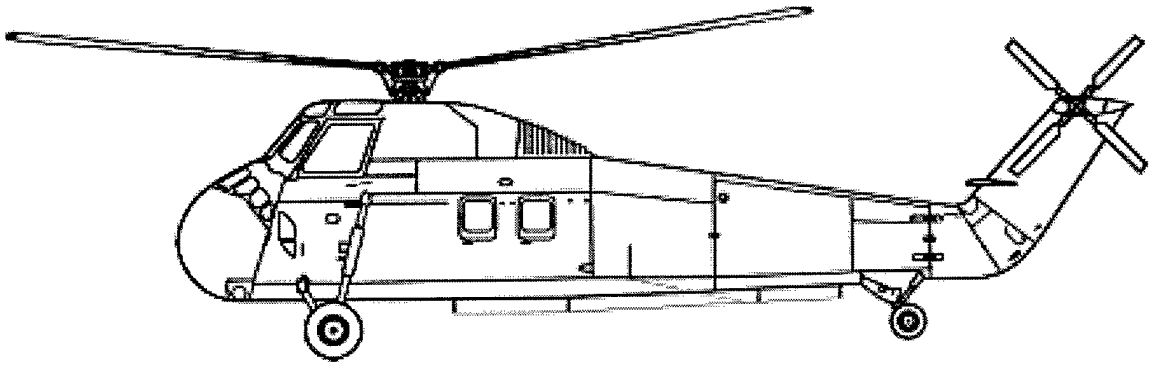

Figure 26. CH-34 Helicopter used by Joint Task Force Leopoldville in 1964. Originally brought to Leopoldville to move troops to Stanleyville to rescue U.S. State Department hostages, they were used for reconnaissance in non-hostile regions of the Congo.

Belgium played only a discrete role in September 1964. Spaak sent Col. Vanderwalle of the Belgian army who had organized Tshombe's Katangan forces to Leopoldville.[60] Vanderwalle quickly set about organizing white mercenaries into columns to begin retaking seized rebel territory in the eastern Congo. He relied heavily upon the CIA-run T-28/B-26 operation in Leopoldville to help his columns push into rebel-held areas.[61] In spite of Vanderwalle's success in organizing the columns, advances into rebel territory were slow and hostages were being killed or abducted by the "Simbas."[62] On 8 November 1964, when Belgian citizens in Stanleyville were also threatened by the "Simbas," Spaak told Harriman it was time for direct joint military action. Belgium did not possess the airlift necessary to get Belgian ground forces to the Congo quickly so Spaak suggested a compromise.[63] If the U.S. could provide aircraft, he would send the Para-Commando regiment to liberate the hostages. This idea appealed to the U.S. since it would avoid superpower feuding over the Congo and keep the U.S. from getting involved in a quagmire on the ground. After a meeting among presidential advisors at the LBJ ranch on 10 November, the JCS told EUCOM to send planners to Brussels on the 11th.

---

[59] Message, JCS #7848 to USCINCEUR (DTG 111655 August 1964); *JTF Leo Historical Report,* MacDill AFB, USSTRICOM, 30 Dec 1965, pp. 4-5.

[60] Vanderwalle had been Belgium's counsel general to Tshombe in Katanga. He had also helped to organize mercenary and Katangan fighters for Tshombe.

[61] These aircraft were detached from the 602nd Fighter Squadron, 1st Air Commando Wing, Hurlburt AFB, FL. USAF personnel were also deployed with aircraft until they could be replaced by CIA-hired personnel.

[62] 800 Belgians, 20 U.S. civilians, and five U.S. consular officials. One U.S. missionary had been sentenced to death on repeated occasions because of continued T-28/B-26 attacks.

[63] Belgian Air Force lift capacity was confined to C-119, DC-4, and DC-6 aircraft. Obtaining overflight clearances in Africa would have been impossible, since most African countries despised Tshombe. It would also have removed the element of surprise from the operation.

Spaak proposed that the Belgian Para-Commando regiment[64] be parachuted into Stanleyville and other cities where the Simbas were holding most of their foreign hostages.[65]

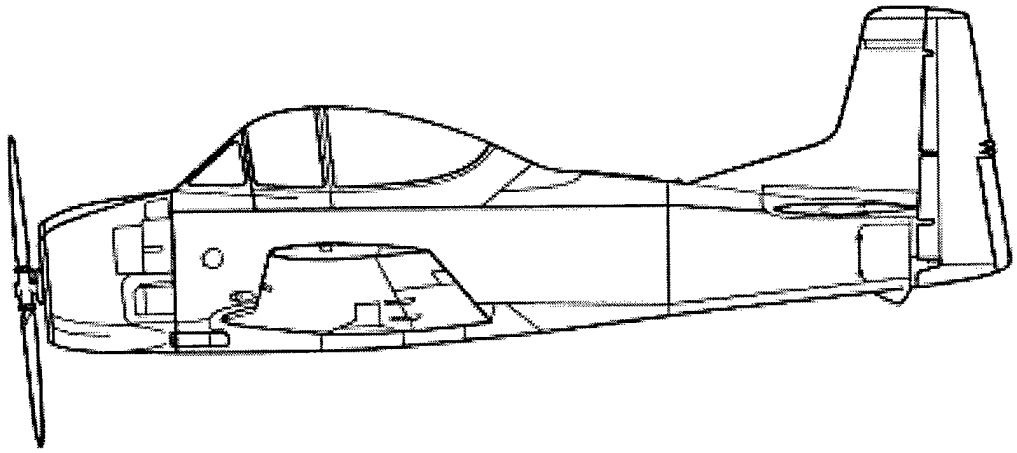

Figure 27. T-28 armed trainer aircraft flown by the USAF and later by CIA contract pilots to help the government in Leopoldville suppress revolts. Highly effective, they were feared by rebel forces.

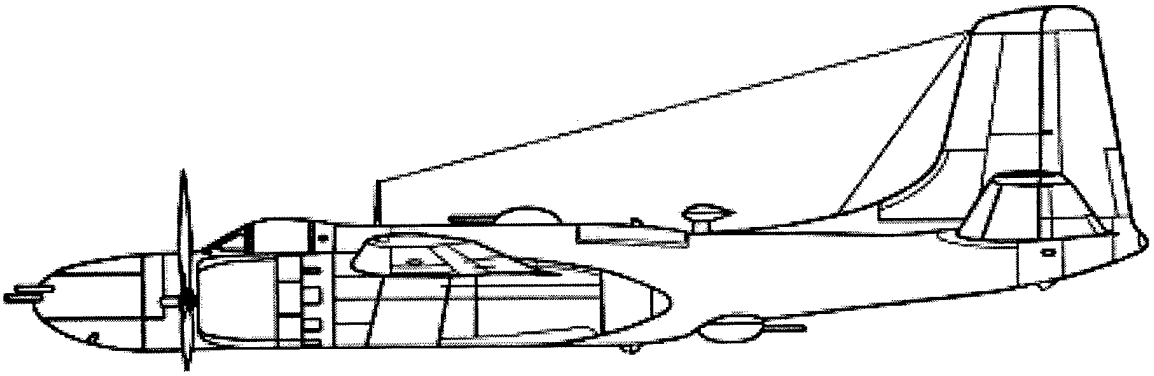

Figure 28. B-26K, a modified World War II light bomber, which was very effective in counter-insurgency operations worldwide. Used in the Congo by the CIA to aid the Leopoldville government, they did more gun strafing than bomb dropping. Most Congo aircraft went on to Laos in 1965.

[64] The regiment was made up of draftees, on a rotational training cycle. The 1st and 2nd Battalions had 10.5 and 5.5 months of training respectively, the 3rd only 2 weeks. The first two battalions were used for the Congo operation.

[65] Frederic Vandewalle, *L'Ommengang: Odyssee et Reconquete de Stanleyville 1964* (Bruxelles: LeLivre Africain, 1970).

The entire process of merging an American air and Belgian ground unit was far from smooth. Planning for this joint Belgian/American operation faced problems on the American side. Gen. Paul Adams, the STRICOM commander, was kept out of the sensitive Brussels-based planning on 10 November, while the CINCEUR Gen. Lemnitzer, took over all planning functions. This move, which cut a general out of the area he was responsible for, was done to maintain secrecy. Gen. Adams at MacDill, however, felt this was a deliberate JCS ploy to keep him from moving more firmly and with greater firepower to liberate American hostages. STRICOM remained an info addressee on message traffic from EUCOM, and Gen. Adams wasted no time after the planning conference to criticize the plan. The planning in Brussels suffered from a lack of hard intelligence data about Stanleyville and the hostages. Also, EUCOM and STRICOM argued about who should give the final go order and when command responsibilities would shift between the two theater CINCs.

Operational lessons learned during the 1960-64 airlift were also addressed. In order to accomplish refueling and to hide the combined U.S.-Belgian force from prying press eyes, Ascension Island, a British possession in the South Atlantic, served as a transit base. Since a direct assault from Ascension Island on Stanleyville was considered risky, a staging base in the Congo was used. The Belgians decided on Kamina, in southeastern province of Katanga. In order to speed up refueling operations at Kamina, a C-130 airlifted USAF refueling trucks, thus avoiding a lengthy manual ground refueling operation. In addition, based on the 1960-64 airlift experiences, a C-130 with parts and a maintenance team accompanied the assault force. STRICOM assumed

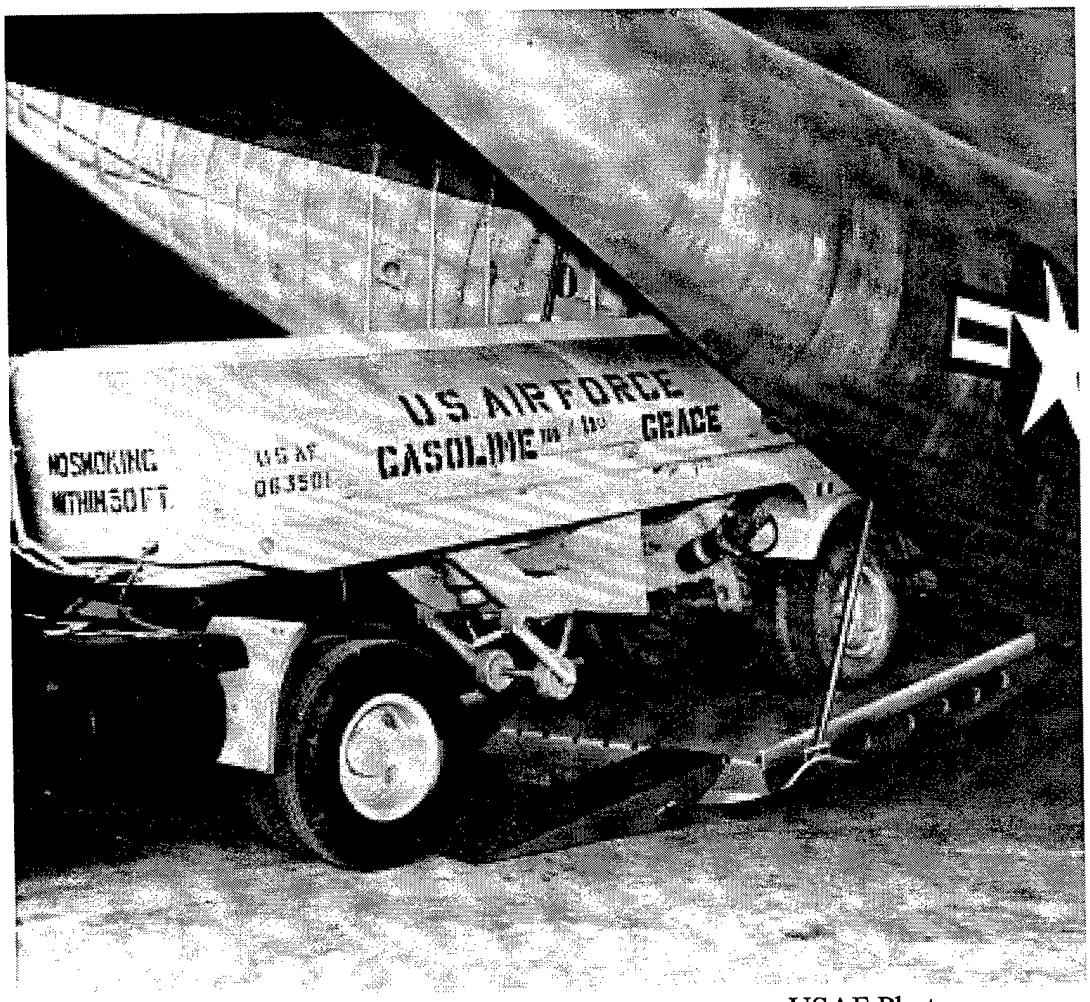

USAF Photo

Figure 29. A fuel truck being unloaded in Kamina before the Dragoon operations. The prepositioning of fuel made the 1964 operations somewhat easier to conduct.

communications responsibility using an OPLAN on file at MacDill AFB. USAFE also decided to add some USAF members to the assault force, two combat controllers to help the Belgians learn how to jump from C-130s, an intelligence officer, and a flight surgeon. All USAFE personnel were barred from combat actions by the State Department. The flight surgeon was to assist the Belgians on the ground in Stanleyville once the airfield was secure. The Belgian Para-Commandos, having never jumped from a C-130, trained during the flight to and on arrival at Ascension Island.[66]

Once completed, the plan, now called "Dragon Rouge," had to be approved in Washington. This done, and with lives now in the balance according to radio broadcasts received from the "Simbas," the JCS "go order" was transmitted to EUCOM on 15 November. On 17 November 14 C-130s of the 464th Troop Carrier Wing under Col.

[66] 322 AD (MATS), Eastern Transport Air Force, *History 1 July 1964-31 December 1964,* Evreux, 1965.

Burgess Gradwell at Evreux AB, France flew to Kleine Brogel AB in Belgium. One C-130 carried spare parts, twelve were for 545 Belgian paratroopers and their armed jeeps, and one C-130 "Talking Bird" was equipped with communications gear. An attempt to file false flight plans to confuse the outside world as to real destination of the task force failed when the State Department instructions to do so reached the C-130 crews at Klein Brogel too late.[67] The deception failed as the press reported that a USAF task force with Belgian paratroopers was going to a NATO exercise on Ascension island. The "Simbas," with an excellent intelligence organization, soon learned the real purpose of this force.

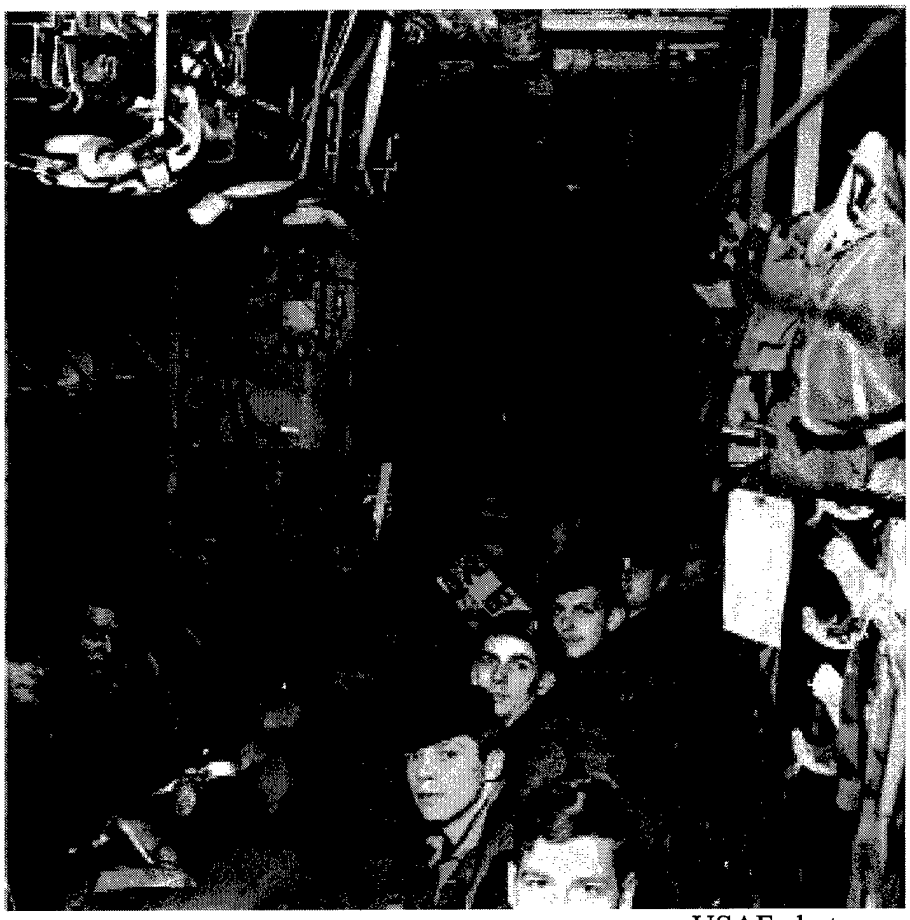

USAF photo

Figure 30. Belgian Para-Commandos in a USAF C-130 on their way to Kamina.

[67] *History* (Pope AFB, N.C.: 464th Troop Carrier Wing [Medium], 1 July-31 December 1964).

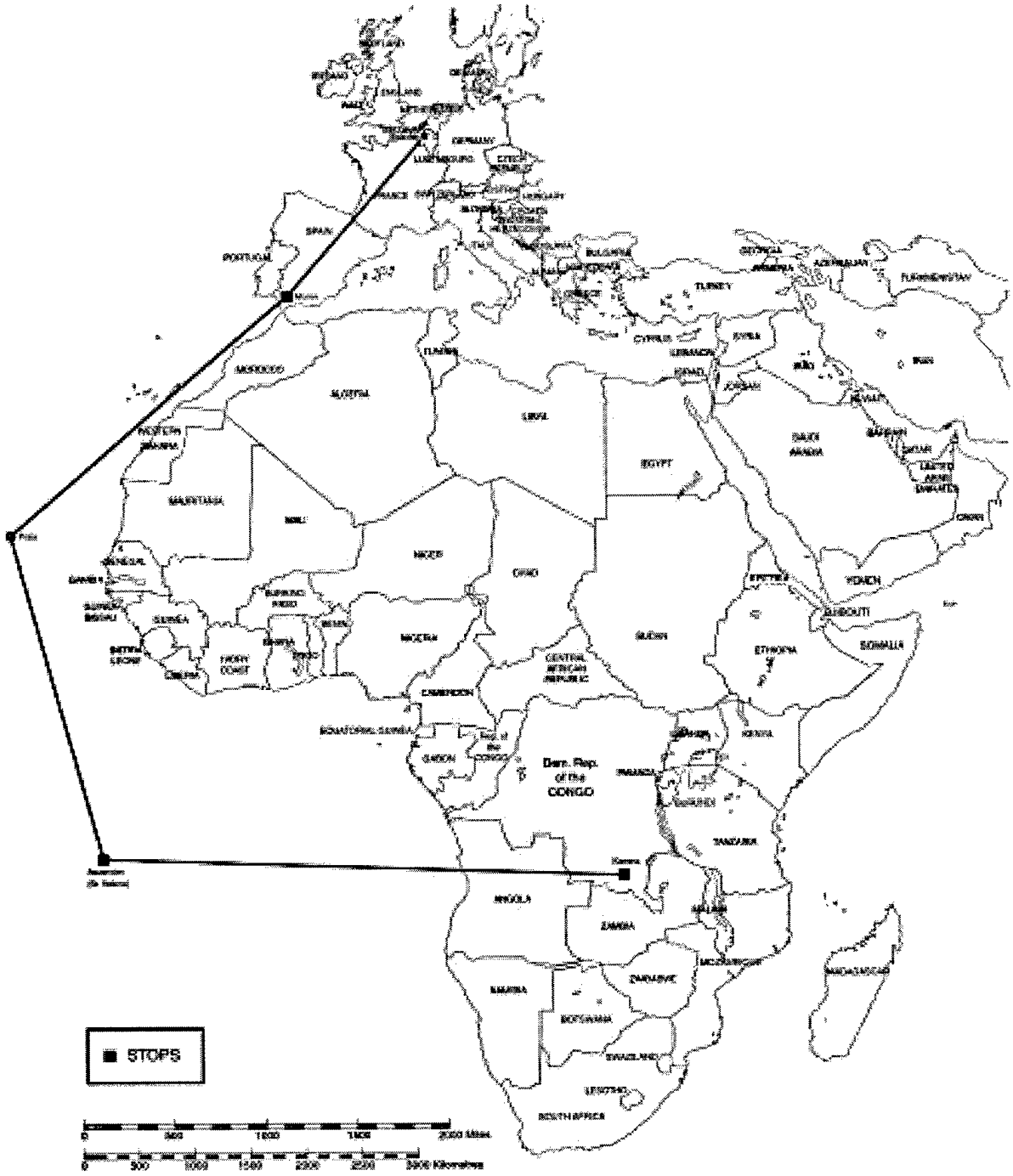

Figure 31. The route taken by USAF C-130s with the Belgian Para-Commandos to and from the Congo.

Still unsure of the whereabouts of hostages and with no recent aerial photography of jumpzones in Stanleyville, USAFE decided to launch its own reconnaissance flights. An RC-97 "Running Bear" deployed to the Congo and, using a long focal length camera,

took pictures from high altitude without being detected from the ground.[68] During the deployment, the USAF intelligence officer in the Dragon Rouge task force was to receive current imagery of Stanleyville taken by an RC-97 on 16 November. However, the efforts were for naught. As the task force passed through Moron AB, Spain on 18 November, the intelligence officer missed the pickup and had to rely on Belgian map data for operational planning.[69] On 21 November the force moved from Ascension Island to Kamina in the Congo after their cover story was blown during a press statement by the Belgian Foreign Minister Spaak.[70]

USAF Photo

Figure 32. A RC-97 "Running Bear" reconnaissance aircraft.

Attempting to improve the hastily composed operational plan, Col. Gradwell, commander of the USAFE C-130 detachment, convinced the Belgians to try a new USAF technique. Flying in line astern formation at twenty second intervals, the C-130s would approach the drop zone at an altitude under 500 feet. A mile out from the target, they would pop up to the jump altitude for their run on the drop zone. To execute the mission the USAF insisted that its people, and not the Belgian jumpmasters in the door, control the drop and give the execute signal based on the navigator's computed airborne release point. The Belgians accepted this proposal and, though it had never been tried before in combat, the technique worked extremely well during the Stanleyville and Paulis drops.[71] This procedure minimized risk to the C-130s and prevented the "Simbas" from being alerted.

Communications again proved to be difficult, in spite of the assigned C-130 "Talking Bird." The relatively slow speed of encrypted communications links meant that message traffic quickly backed up. In desperation, an ever increasing proportion of

[68] The RC-97 could easily conceal its real mission since it looked like a regular C-97 transport. See page 103, *Cold War Air Spies Lunched in Berlin*, October 9, 2000, Aviation Week and Space Technology.
[69] JTF LEO Historical Report, p. B-3 and Odom, p.73.
[70] Paul-Henri Spaak, *The Continuing Battle: Memoirs of a European 1939-1966* (London: Weidenfeld, 1971).
[71] History, 322 AD, pp. 33-39.

communications between the joint American-Belgian task force and the JCS in Washington had to be conducted on open links utilizing USAFE's single-sideband HF "Twilight Net." In addition, USSTRICOM deployed joint communications support elements (JCSE) to Kamina and Leopoldville to assist the "Talking Bird" in maintaining the required communications links.[72] But they too were overwhelmed by the volume of communications.

As the American-Belgian task force sat on the ramp at Kamina, tensions between USEUCOM and USSTRICOM, until now confined to higher command echelons, spilled over to the two USAF colonels in the Congo. Col. Gradwell, who had done most of the planning with Belgian Col. Laurent, commander of the Belgian Para-Commando regiment was now superceded by Col. Clayton Isaacson from USSTRICOM, even though both were of equal rank and both were Air Force officers from the same Troop Carrier Wing at Pope AFB. Col. Isaacson was the JTF LEO commander and also STRICOM representative to the Congo. Effective 20 November USSTRICOM had assumed operational command of the task force from CINCEUR and Colonel Isaacson as JTF LEO Commander under USSTRICOM took over as overall commander. The colonels argued about flying schedules, jump sites, and aircraft usage. Col. Laurent, the Belgian commander, had planned and coordinated with Col. Gradwell, and thus felt alienated by Col. Isaacson.[73] Adding to these difficulties Gen. Adams at MacDill sent a series of messages and instructions which Col. Isaacson was obligated to follow since he worked for USSTRICOM and was the general's representative to the Congo.

Adding to the command frictions, Col. Isaacson was instructed by Gen. Adams in MacDill, that the B-26 flown by Cubans would be used for ground fire suppression prior to the Belgian jump. This unfortunately gave away the element of surprise that Col. Gradwell and Col. Laurent were trying to achieve. Col. Isaacson also flew a weather reconnaissance mission in a C-130 prior to the drop.

On 24 November at 0600L the first 320 Belgians parachuted into Stanleyville from five C-130s. Seven C-130s followed later and landed after the runway at Stanleyville airfield was cleared of obstructions placed there by the "Simbas." Airlanding the remainder of the Belgian Para-Commandos and their jeeps, two C-130s stayed on the ground--one with the USAFE flight surgeon. Others flew to Leopoldville where they waited, together with the C-130s from JTF LEO, to run an evacuation shuttle between Stanleyville and Leopoldville, on the signal of Col. Laurent.[74]

---

[72] Accomplished under OPPLAN 319/64 an older STRICOM plan for hostage rescue which was changed to suit the particular circumstances of Dragon rouge. JCSE were JCS communications specialists from all four services who were stationed at MacDill AFB and were worldwide deployable. (U.S. Strike Command, *JTF LEO Historical Report,* MacDill AFB, 30 December 1965, Communications Annex to OPPLAN).

[73] Joint Chiefs of Staff, *History of the Unified Command Plan* (Washington, D.C.: Joint Secretariat, Historical Division, 20 December 1977).

[74] Lt. Col. William Glasgow, USAEUR, Operations Division, Historical Section, *Operations Dragon Rouge and Noir,* Heidelberg, 1965.

Figure 33. This map shows the two Dragon operations with the hostages flown to Leopoldville for processing after their rescues in Stanleyville and Paulis.

As Stanleyville was liberated, walking wounded and dying hostages arrived at the airfield. Filling each C-130 with about a hundred refugees, both took off under fire for Leopoldville. The flight surgeon would later state that he was simply overwhelmed and ran out of medical supplies with which to treat wounded and dying. Some of the Americans in Stanleyville survived, but others were shot or hacked to death before the Belgians could reach them. After a skirmish at the airfield, the Belgians radioed that the air bridge between Leopoldville and Stanleyville could commence. Both C-130s and DC-4s were used.[75]

[75] David Reed, *111 Days in Stanleyville* (New York: Harper&Row, 1965).

On 24 November there were 17 C-130s at Leopoldville, 13 from USAFE and four from JTF LEO. After flying in the air bridge, and as a result of groundfire received during the initial assault on Stanleyville, five needed repairs before they could take part in the next assault. Maintenance personnel flew from Kamina to Leopoldville, and together with Sabena ground personnel, worked through the night to get all the aircraft operational again. While 2,000 hostages were being evacuated by C-130s and DC-4s to Leopoldville, an RAF Beverley and Argosy also arrived to assist in the evacuation effort.[76]

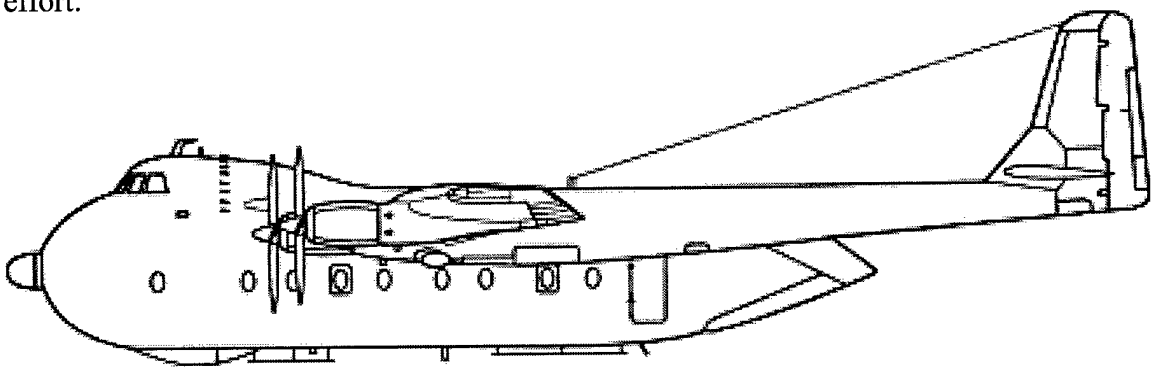

Figure 34. RAF Argosy transport. Normally used to haul Army equipment, it was pressed into service to evacuate hostages from Stanleyville to Leopoldville.

Dragon Noir

As planning progressed for Dragon Rouge, both the Belgian and American governments quickly realized that more refugees might need to be rescued in the vast eastern half of the Congo. So between 18 and 20 November another set of American-Belgian planning conferences were held in Brussels under great secrecy. The follow-on operations planned were Bunia (Dragon Blanc), Watsa (Dragon Vert) and Paulis (Dragon Noir).[77] On 24 November Col. Laurent held a planning conference at Stanleyville, and, analyzing refugee data, decided that Paulis was to be the first priority. Laurent based his assessment on hostage accounts in Stanleyville and the brutality of the local "Simba" unit. A RC-97 Running Bear provided imagery and staff work began at Stanleyville. This planning took place in spite of the fact that companies of the Para-Commando regiment were still fighting "Simbas" on the edge of the Stanleyville airfield.[78]

Black American civil-rights leaders, outraged at the killing of blacks to save whites, pressured the Johnson White House to cease all U.S. involvement in the Congo or

[76] The Beverley was from 84 Squadron and the Argosy from 105 Squadron. (U.S. Strike Command, p. 156).
[77] The dragon operations are all color coded, rouge=red, noir=black, blanc=white, and vert=green.
[78] Colonel Charles Laurent, *Mission Accomplie* (Pourqoui Pas?, No 2401-4, December 1964), pp. 3-15.

face a domestic civil rights crisis. The U.S. ambassador in Leopoldville had strongly recommended that all four operations proceed. President Johnson, concerned about world reaction to the Stanleyville operation, passed the word in Washington that he would support only one more operation. Since the Para-Commandos were now thoroughly exhausted, having gone without sleep for four nights, requests to run two dragon rescue missions simultaneously were dismissed. Dragon Noir started on 26 November 1964 when Belgian Para-Commandos jumped from four C-130s while three C-130s conducted an airlanding at Paulis. All C-130s returned to Kamina and overnighted. On the 27th the C-130s came back and picked up everyone as planned. Because of fears of a Third World backlash and U.N. General Assembly condemnation, no other rescue missions were attempted and the USAFE C-130s flew the Belgian troops to Kamina and then home to Belgium.[79]

Effective communications might have eased the jumbled command and control arrangement for this coalition operation. The amount of classified traffic overwhelmed the "Talking Bird's" capabilities and for both Rouge and Noir the Belgians and Americans had to rely on USAFE's "Twilight Net" transmitting in the clear. In spite of the fact that three JCSE elements were deployed, priority encrypted communications only reached Washington three hours after events in the Congo and led to numerous frustrations within the White House, State Department, and JCS. Communications problems were further complicated by language difficulties. At Stanleyville, five different languages were used on radio links: Spanish by the Cuban pilots flying the B-26s, French and Flemish by Belgian troops, English by USAF personnel, and a mixture of tongues by ground mercenary columns entering the city.[80]

Both Dragon operations were a success from an airlift standpoint but since white hostages were executed after the Paulis operation -- numbers varying from 500 to 1,000 -- the overall goal of rescue was not achieved. Sixty-one hostages were killed during the initial parachute drop by the Belgians on Stanleyville. The Para-Commandos lost 2 dead and 3 wounded during the operation. JTF LEO, the STRICOM detachment, stayed until August 1965 supporting ground mercenary columns pushing back the "Simba" rebels in the eastern half of the Congo.

---

[79] Country Files: Congo, Containers 81-87, National Security files, Lyndon Baines Johnson Library, Austin, Vol. 2 6/64-11/65.

[80] DOD, *The Congo Rescue Mission of November 1964* (Washington, D.C: Weapon Systems Evaluation Group, 8 April 65), pp. 123-31.

Figure 35. Location of the last rebellions in the Congo in 1967. The last CIA-operated T-28s and B-26s were withdrawn after the insurgent groups surrendered to the central government in Leopoldville. The USAF supplied C-130 airlift to support the CIA operation and ran a training mission in Leopoldville.

Standard USAFE operations, C-130 cargo runs into Leopoldville, continued through 1967. USAFE sent three C-130s to ferry Congolese troops to fight rebels and mercenary groups that refused to disband. From July to December 1967 the aircraft flew 412 sorties, 1,540 tons of cargo, and 7,500 passengers under the code name "Bonny Birch."[81] The CIA-run B-26K/T-28 operation continued until 1967 when the last of the mercenary groups fighting the eastern Congo rebellion disbanded.[82] The CIA operation closed down and Military Airlift Command (MAC), the renamed MATS, ran routine embassy support flights into the Congo. Between 1967 and 1977 the Congo, renamed Zaire was relatively quiet.

[81] *USAFE History* (Lindsey A.S. West Germany: 1 July 1967 – 31 December 1967).

[82] This operation was code-named "Anstalt Wigmo" for a Liechtenstein front company. The best summary of these operations can be found in Dan Hagedorn and Leif Hellstrom, *Foreign Invaders. The Douglas Invader in foreign military and U.S. clandestine service* (Leicester: Midland Publishing Limited, 1994).

1977/78 Shaba I and II

After Gen. Joseph Mobutu seized power in 1966 political and military strife abated for a while. He also renamed the country and its cities in 1972. However, the Zairian military suffered purges and a growing international debt squelched military purchases and spare parts, weakening the Zairian state militarily. International mining experts still helped to extract the mineral wealth of Shaba, the renamed Katanga province. Mobutu decided, for internal tribal reasons, to support cross-border raids from Zaire into Angola. Since 1964 Angola, a Portuguese colony, had seen an increasing bitter civil war. This raid, however, sparked a reaction in Angola which would led to incursions into Shaba province by remnants of Tshombe's old Katangan gendarmarie now renamed the Front de Liberation Nationale (FNLC). These fighters, who had gone into exile in 1967 in Angola, had neither forgotten nor forgiven.[83]

As a consequence of a cross border incursion on 10 March 1977 from Angola, the Zairian military evaporated. In a panic Mobutu sent appeals for aid to Western capitals. Mobutu claimed the Marxist incursion from Angola would mean the communist seizure of Africa's largest country, Zaire. Mobutu hoped that American and European anti-Communist politicians would come to his rescue. Belgium, still smarting from the international tongue lashing it had received in 1960 and 1964, was unprepared to send any aid. The U.S., no longer seeing Zaire as a key lynchpin in the East-West global super-power rivalry, was willing to help find a regional solution, but unwilling to intervene itself. France, in defense of Francophone Africa, stepped into this void and sent advisors. France also orchestrated an airlift of 1,500 Moroccan troops to Shaba using thirteen French C-160 Transall transports in an operation codenamed "Verveine." Unlike other European powers, France still had a string of bases on the African continent and thus could easily move its airlift assets without lengthy and difficult overflight clearances. The base infrastructure network also allowed a relatively short-range transport as the Transall to refuel and stage during the trooplift to the Congo. As Moroccan troops began to land in Shaba, the Katangan fighters fled back to Angola. The Zairian Army, continuing the "excellent" torture skills demonstrated in all previous conflicts, carried out such cruel reprisals against the civilian population that about 70,000 Zairians fled to Angola as well. The stage was set for another cross-border incursion.[84]

---

[83] Malutama di Malu, *The Shaba Invasion* (Ft Leavenworth, KS: USACGSC, 1981), pp. 26-30.
[84] General Yves Gras, *L'operation Kolwezi* (*Mondes et Cultures*, 8 November 1985), Vol. 45, p. 693.

Figure 36. Shaba II USAF air operations. French and Belgian sorties are not shown.

By 1978 power equations shifted somewhat. Cuban army units now actively operated in Angola's ongoing civil war. When the FNLC attacked on 11 May 1978 it thrust into Shaba, and the mining center of Kolwezi quickly fell on 13 May 1978. About 2,000 foreigners became hostages, including about 28 Americans. The Katangan and Zairian rebels, drew on the experience of their previous operation and put together a sophisticated raid designed to embarrass and even overthrow Mobutu. President Carter, wanting to send a clear message to regional allies that the U.S. would tolerate no communist seizures, ordered the ready brigade (the second) of the 82nd Airborne Division placed on standby at Ft. Bragg, and he began consulting with the Belgians and French. Also alerted, but not deployed, was the 3rd Battalion, The Queen's Regiment of the United Kingdom. When the American "hostages," about 34 mining experts, left Kolwezi unhindered, President Carter refused to sanction any American ground troops and instead

assisted Belgian Para-Commandos and French Foreign Legion paratroopers in seizing Kolwezi. French military officers deployed on an assistance mission in Kolwezi were immediately executed and an additional 43 Europeans were shot in an building on the outskirts of Kolwezi. With neither France nor Belgium equipped to mount a long range operation, the USAF had to provide airlift.[85]

On 17 May the 2nd Regiment Etranger de Parachutistes (2nd REP) [2nd Regiment, French Foreign Legion Paratroopers] at Calvi, Corsica was placed on alert. On 18 May, under the codename "Operation Leopard-Bonite," the first echelon was flown on French DC-8 jets[86] to Kinshasa (renamed from Leopoldville) in Zaire. The USAF flew the second echelon of the French Foreign Legion directly to Lubumbashi (the former Elisabethville). Consulting with French military advisory teams already in Kinshasa, and learning that the situation in Kolwezi was critical, Col. Philippe Erulin, 2nd REP commander, jumped near Kolwezi with his lead elements (3 companies) on 18 May. This first jump was from four C-130s, Zairian Air Force aircraft, seized by the French and flown by French pilots. A C-160 Transall of the French Air Force also participated. Each aircraft was packed with 85 men and their weapons and supply containers, well above the normal load of only 64 men and containers.

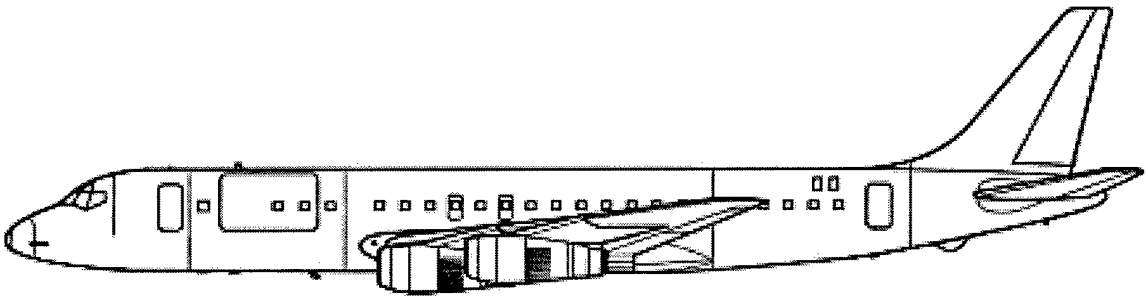

Figure 37. DC-8. Both the French Air Force and the French charter UTA used these aircraft to get the French Foreign Legion paratroopers to Kinshasa.

[85] Pierre Vandervoorde, *Paras du Monde Entier* (Namur: Wesmael-Charlier, 1981), pp. 221-23.
[86] Three DC-8s which belonged to the French charter carrier UTA, one French Air Force DC-8, and a leased Boeing 707.

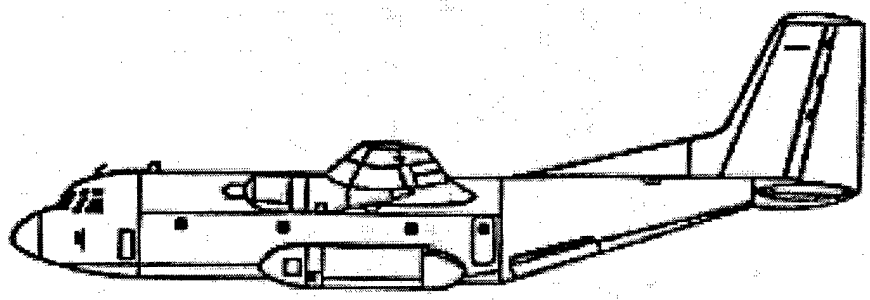

Figure 38. French Air Force C-160 Transall. Standard tactical air transport of the French throughout Africa, it does not have continental range, which is why the French Air Force bought C-130s after Shaba II operations.

Col. Erulin wanted a complete force to jump and thereby have a sufficiently strong combat unit on the ground. After suffering through a serious of aircraft breakdowns and reloading the force into other aircraft, the French Foreign Legion Paratroopers finally set off for a long and hot five-hour flight to Kolwezi. Since French parachutes had not yet arrived, U.S. Army T-10 chutes were used. This created problems for the French since their web gear was not compatible with American parachutes. Rolls of electrical tape overcame that problem. Jumping from 600 feet outside of Kolwezi into six-to-ten-feet-tall elephant grass and termite hills caused assembly problems for the paratroopers on the ground. The second wave was moved to Kamina by an Air Zaire DC-10, acquired to help the French make intra-Zaire lifts. The second French jump was made on 20 May after technical problems had been solved at Kamina. Kamina, as so many times before, served as the base of operations for both the French and Belgians during their operations in Shaba. With his regiment on the ground Col. Erulin secured the city on 20 May.[87]

For the Belgian unit, the Para-Commando regiment alert came on 16 May, but movement to Africa was executed in a slightly different manner. Under an operation code-named "Red Bean" the Belgians deployed and rescued their expatriate population in Kolwezi. The regimental commander, Col. Henri Depoorter, knew that a 22-hour C-130 ride would prematurely fatigue his 1,171 paratroopers, so he put them on two Boeing 727s and eight Sabena Boeing 707s and flew them directly to Kamina. Overflight problems caused the route to be Madeira-Abidjan-Libreville. Eight Belgian Air Force C-130s carried a cargo of jeeps, ammunition, a mobile surgical hospital, food, and water to Kamina. On 20 May the Belgians seized the Kolwezi airfield. The Belgian Para-Commandos after their landings at Kolwezi airport began evacuating Europeans to Kamina with Belgian Air Force C-130s. After treatment of their injuries at Kamina the hostages were flown back to Europe on civilian airliners.[88]

---

[87] Lt. Col Jacques Hatte, "Kolwezi. An Airborne Assault," *Infantry*, November – December 1979, pp. 24-29.

[88] Maj. Gen. Henri Depoorter, "Kolwezi," *Military Review*, September 1979, pp. 29-35.

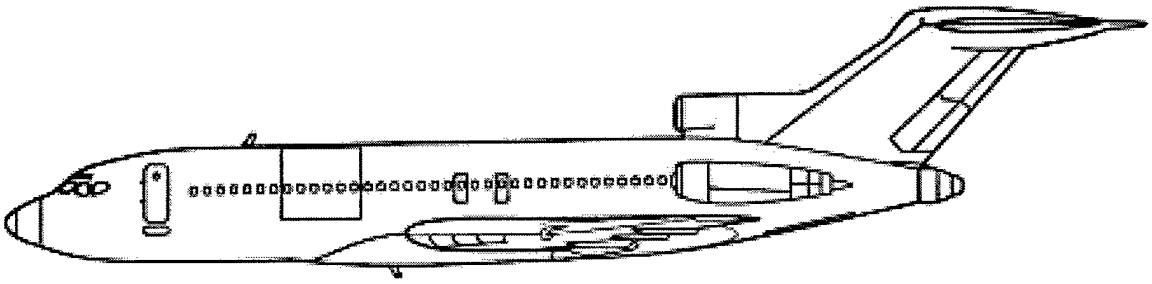

Figure 39. Belgian Air Force 727-100 heavily used during operations at Kamina. Two of the aircraft were assigned to the 15th Wing.

As refugees began showing up in Kamina on 20 May, other countries lent assistance. These included an RAF VC-10 configured as a flying hospital, dispatched from Lusaka, Zambia, and three RAF C-130s that helped move hostages out of Zaire. An Italian C-130 flew in food. The USAF devoted eighteen C-141s and one C-5 to move fuel to Kamina and French Foreign Legion vehicles to Lubumbashi. Four C-141s shuttled 352 tons of fuel between Kinshasa and Kamina because the fuel farm at Kamina was in-operative. Fuel and parking ramp space problems forced USAF airlift support to move from Monrovia (Liberia) to Dakar (Senegal). The Belgian contingent was supported with 100 tons of cargo flown from Brussels to Kamina. The French Foreign Legion received 437 tons of cargo and had 120 personnel flown by the USAF to Lubumbashi.[89]

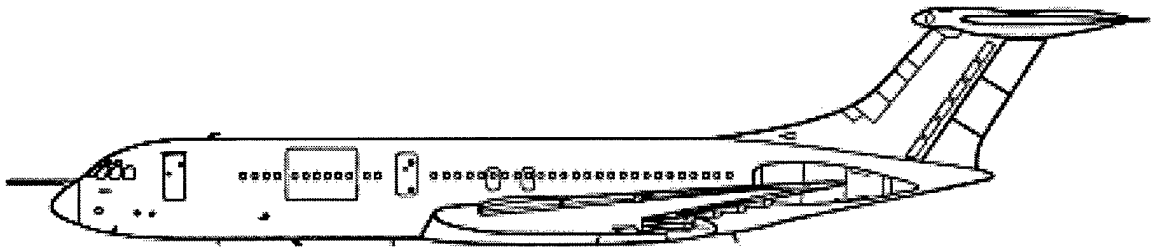

Figure 40. Royal Air Force VC-10 cargo aircraft. Configured with a hospital this aircraft flew to Kamina from Zambia after the Belgians and French had secured the hostages in Kolwezi.

The Belgian Air Force flew 32 roundtrip missions between Brussels and Kamina and 426 local C-130 sorties, logging a staggering 1,726 hours of flying time in a four-day period. Some Belgian crews logged 30 hours of flying time. French Air Force data is little harder to breakdown. They "acquired" five Zairian C-130s to add to their three C-160s and flew at least 2,300 hours in seven days. Most of the French airlift involved

[89] U.S. European Command, *Lessons Learned from the Logistics Support for the Zaire Crisis 1978,* Patch Barracks, 1978, pp. 148-49.

moving munitions from Chad and other French African garrisons to Zaire. Nevertheless, both France and Belgium needed USAF airlift to move 4,000 "light infantry" to Africa and rescue 2,300 hostages.[90] After a series of reconnaissance operations to secure the border and reestablish some control over the area, the French were relieved by a pan-African force, and on 6 June returned to Corsica on USAF C-141s. French causalities were five KIA and 25 wounded.

When the European contingents were replaced by an African force from Morocco, Ivory Coast, Gabon, Senegal, and Togo, USAF transports flew in 1,214 tons of cargo and 416 personnel. The remainder of the force was transported on French Air Force and chartered transport aircraft. The USAF also airlifted the French and Belgian contingents home -- 809 personnel and 225 tons of cargo to Corsica, 129 tons of cargo to Brussels.[91]

American ambivalence towards Zaire, now renamed Congo again, became very pronounced at the end of the Cold War when Soviet or Cuban complicity in the Congo was no longer a factor. The deterioration of the rudimentary but effective transport network (river and railroad) that linked key regions together during the colonial era has seen the Congo splinter into several regionally-based warring factions, some of which have militarily engaged U.N. relief aircraft just as their fathers did in 1960.

---

[90] "NATO Airlift Deficiencies Seen in Zaire Evacuation," *Aviation Week and Space Technology*, Issue 22, 29 May 1978.
[91] Lt. Col. James Cole, "Zaire Airlift," *Airlift Operations Review*, October 1980, pp. 14-18.

Conclusions

Each Congo airlift operation was unique in its own way, however, the lessons learned were passed on to successive operations. Some problems, such as communications, were so daunting that they have not yet been solved. Various techniques were tried but each had a shortcoming, usually technological in nature. After the 1960-64 airlift, the JCS and the Air Force tried to introduce deployable communications elements to provide better connectivity to the CONUS. But the "Talking Bird" C-130 was quickly overwhelmed. Satellite communications were used in the 1978 operation, but again band width, that is, the number of channels on a satellite, limited the utility of these bulky systems. Tied to communications is command and control, a problem all operations have suffered from. The JCS, in 1991 after the Cold War, redrew the Unified Command Plan, giving USAFE control over most of the African continent, since its assets were frequently the ones called upon to carry out operations there. In 1964, STRICOM assumed operational control over Dragon Rouge operations in the Congo, without the benefit of having been involved in planning. American and Belgian commanders achieved a rare unity of purpose in spite of the fact that their governments had different goals. However, major U.S. commands waged a bitter struggle over control of the operation.

Fuel has not been an issue in later airlifts, but in 1978, as in previous airlifts, the USAF had to fly in fuel for use inside the Congo since the internal infrastructure was not capable of providing the required amounts. Ramp parking especially for fully loaded C-141s and C-5s has emerged as the new problem since most African airfields cannot handle the weight or provide the room needed to park these huge aircraft. The lack of warning of Congolese problems has always meant that flying, planning, and operations were conducted rapidly and ad hoc.

The Belgian Air Force conducted a tremendous amount of flying in July and August 1960 para-dropping, evacuating, and rescuing. However, in subsequent operations the lack of strategic lift forced Belgium to look to the USAF to move forces into the Congo. The Belgians also required the USAF to sustain their forces in the Congo past their initial arrival. Belgium's ability to press its national airline Sabena into service, like a "civilian reserve air fleet" (CRAF), allowed it to carry out the refugee evacuation and troop movement tasks in 1960 and 1978. The French Air Force learned a great deal from the 1978 Shaba II airlift. It bought C-130 and C-130-30[92] transports allowing it to quickly reinforce African garrisons and move into crisis spots such as Rwanda in 1994.

The USAF benefited from the 1960-64 airlift, arguing that only a large jet-equipped transport force would allow the Air Force and the United States to meet their foreign policy objectives. The C-141 was authorized and the size of the fleet increased after congressional testimony about the "New Tape" airlift. An interesting side note, is

[92] An "stretched" length C-130 can carry an increased payload over the same distance as a regular C-130.

that in 1964 President Johnson had to delegate some foreign policy decision-making on the Congo to trusted advisors, since Southeast Asia and a re-election campaign were taking up too much time. Most JFK scholars feel that the Congo was a foreign policy success because Kennedy prevented that infant nation from slipping into the communist camp.[93]

There are also other general lessons to be identified from the Congo missions. Crisis situations will rapidly develop, especially in those areas which lie outside the intelligence focus of the United States. Each crisis in the Congo caught the U.S. looking elsewhere. There also is no such thing as a poorly armed insurgent. The 1960-64 "New Tape" airlifts had only resulted in minor aircraft damage, but Dragon Rouge and Shaba showed that, even without AAA, insurgents can wreak havoc. Somalia proved the case. Another planning issue currently in the forefront as the Army tries to create "light divisions," is that planners and airlifters routinely underestimate the amount of material and the consequent weight of a light infantry formation being deployed to an austere location. The Belgians learned this lesson well. In 1978 they had austere-area logistics packages for their C-130s in Shaba II allowing them to complete four engine changes while deployed to Kamina. Nevertheless, considering that both the Belgian Para-Commando and French Foreign Legion paratroopers are considered by most military observers to be "light" infantry formations, the amount of material needed to stay deployed for 30 days was staggering, and could not have been accomplished without USAF airlift. Whether humanitarian, or combat assault, each airlift requires flexibility, planning, and constant adjustment. Third World contingencies of all kinds will continue to challenge the USAF.

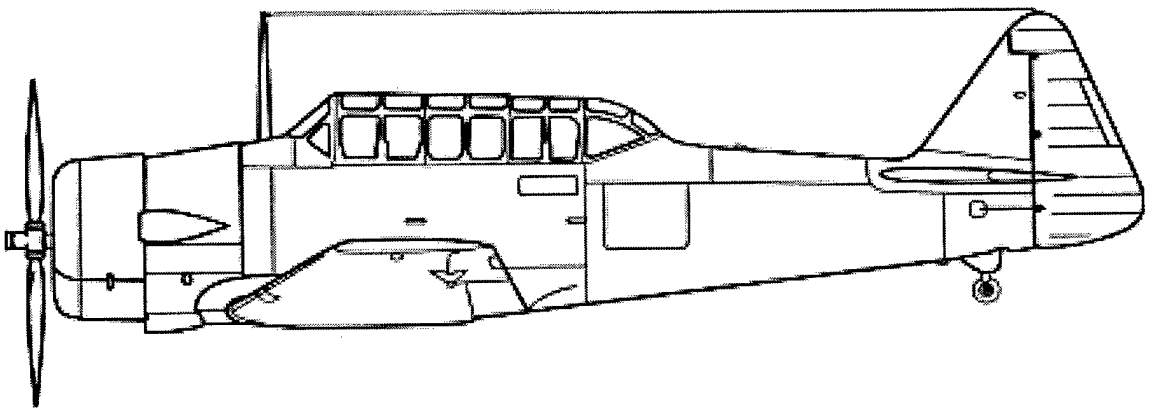

Figure 41. T-6 Harvard. These aircraft served as trainers at Kamina until the July 1960 mutiny when they were armed with machine guns and bombs to help Belgian forces re-establish control in the Congo.

[93] His failures were Cuba and Laos which did go communist and Berlin which ended up a draw.

The Berlin airlift gave the USAF a strategic heavy lift transport fleet, the C-124 and C-97. At the end of the Congo airlift in 1960, both Secretary of Defense Thomas Gates and Chief of Staff Gen. Thomas White were able to persuade Congress to fund a jet transport fleet for the Air Force. The C-135 (Boeing 707) variants demonstrated their strategic lift capabilities at the end of the Congo airlift in 1964. What Congress was asked to fund was a dedicated jet transport with easy rear loading capabilities, then called a "swing tail." In order to meet the requirement for rapid global deployments, only military airlift sufficed. Contract commercial aviation did not fit military needs. In view of problems discovered during the Berlin airlift and confirmed during the 1960 Congo airlift, ease of loading and unloading aircraft became a primary design feature.

One of the legacies of the 1960 Congo airlift was the large number of USAF transports Congress was willing to buy, giving the USAF an in-being airlift force capable of meeting U.S. policy and military goals without delay. The Congo airlift of 1960 and 1964 showed the dynamic versatility of the new C-130s, especially the ability to load/unload quickly, and with the C-130E model the ability of a medium transport in troop carrier wings to fly continental distances. The range improvements in the "E" model helped in the late sixties to consolidate military transportation assets under a single manager, Military Airlift Command. With Vietnam some of the lessons of Congo airlift operations moved to that theater, and were ultimately incorporated into USAF airlift doctrine.

Some problems prevalent though all Congo operations plague current military operations, e.g. communications. Any Third World operation conducted today would encountered the same problems that all Congo operations faced. Navigation aids and air traffic control simply do not exist in large parts of the world, and any operation today will have to bring the capability with it when it deploys in order to conduct safe and successful operations. Weather forecasting while better, because space based assets are used, still requires a communications infrastructure to get data to the aircrews. Combat control teams, developed during World War II, provide local service, but country-wide capabilities are beyond their technical means. They provided excellent support during the 1964 and 1978 operations, but recent events have shown that flying in some areas of the world is extremely haphazard, lacking even basic air traffic control operations.

The Berlin airlift and the Hump operations of World War II required only certain commodities to be moved. The Congo airlift of 1960 was characterized by a complete lack of loading discipline since countries did what they wanted for their contingents. The UN was too overwhelmed to gain control and the Air Force teams placed on the ground in Africa only slowly were able to manage the flow of men and supplies, lacking the ever necessary communications links to their headquarters in France. Automated loading and palletization were developments the airlift forces would see during the Vietnam War. They were not yet in place during the 1960 and 1964 operations in Africa. Airlift control elements made the 1978 operation safer and more economical since they could control the flow of supplies and manpower with systems in place.

Only the 1964 and 1978 Congo operations were coalition operations in the sense that the U.S. supplied airlift while the other countries, Belgium and France, provided the ground forces. The Belgian Air Force in the 1960 crisis was operating under its own national orders and in some cases hindered or delayed USAF operations. USAF operations in 1960 were conducted under U.N. auspices and were multi-national in nature. The 1964 and 1978 models may well foreshadow the future of humanitarian or combat operations in the Third World where U.S. national interests are not primary. The USAF still has the largest amount of military airlift in the world. Most countries still have not procured needed aircraft. Equipment commonality problems like those encountered by the French in 1978 have to be dealt with prior to a crisis.

The 1978 Shaba operations were also the turning point for Belgian and French airlift forces. The Belgian Air Force, already equipped with C-130s, kept the aircraft. The French Air Force's Transall fleet, overwhelmed by African requirements, was supplemented by C-130s. DC-8s were also added to provide global strategic lift. The realization that two so-called "light regiments" with NATO commitments required over 200 USAF airlift sorties led to calls for pre-positioning of equipment and supplies closer to likely operational areas. France has a series of sites in the Africa continent allowing it to aide Francophone allies quickly and without large airlift requirements. All three Congo operations demonstrate that responsiveness to global problems requires a highly mobile Air Force and dedicated military airlift.

Recommendations

Expeditionary Air Force operations require a dedicated airlift fleet
The USAF had a C-124/C-130B fleet in 1960 to meet contingency needs. In 1964 it conducted a daring assault with C-130Es, and in 1978 C-141s/C-5s met the airlift challenge. Today facing more global uncertainty the USAF must meet global requirements with a shrinking airlift force. Third World airfield construction has not kept up with C-17 footprints (weight), requiring a tactical fleet of C-130Hs and Js to meet contingency requirements.

Effective command and control of expeditionary and emergency response airlift requires communications.
This has been broken on every Congo operation. There simply was no equipment to communicate with the United States, control agencies in Europe, and other USAF teams deployed across Africa. In spite of a JCS attempt to fix this problem in 1964 with a C-130 "Talking Bird," and with satellite systems in more recent operations, this is an area requiring fixes.

Support in austere Third World countries requires a self-sustaining airlift force.
The lack of a support infrastructure means that airlifters must fly in everything: clean water, fuel, and food. In addition, they must be prepared to carry out logistics resupply by air as long as the operation is ongoing. With non-existent or flawed air traffic control procedures in place, U.S. radars and controllers may be required to resolve safety-of-flight issues during airlift and air assault operations.

Coalition support entails a larger support role than an emergency response.
Since the USAF operates more, and more flexible, airlift assets, simple airlift of emergency supplies will not suffice during multi-national operations. France and Belgium, which only sent a regiment each in 1978 to Katanga during Shaba II operations, required a significant amount of USAF airlift to get to the Congo and also to conduct in country moves. Future coalition operations will require more U.S. airlift, not less.

Expeditionary and emergency response airlift requires intelligence and linguist support for success.
In order to conduct safe and meaningful airlift operations, linguist support to get host-nation data is required. The USAF has always been able to find intelligence and linguist support, but this is usually on an ad hoc basis and not formalized to work in the current changing climate of expeditionary operations.

Table 2. Aircraft Performance Overview

Aircraft type	Max Speed (Miles per hour)	Max Range (Miles)	Payload (pounds)	Comments
Belgian Air Force				
C-119	218	2,280	20,000 lbs	62 paratroopers
C-47 (DC-3)	230	1,500	6,000 lbs	28 paratroopers
S-55	110	360	3 crew 8 pax	
Sycamore	127	300	2 crew 3 pax	
Alouette II	115	186	1 crew/3 pax	
C-54 (DC-4)	265	3,900	25,000 lbs/50 pax	
C-118 (DC-6)	307	4,720	27,000 lbs/86 pax	
Boeing 727	57	1,670	145 pax	Belgian AF (2)
Boeing 707-120B	585	5,755	147 pax	Sabena airline
French Air Force				
C-160 Transall	377	1,150	50,700 lbs/88 pax	Standard French Air Force tactical transport
DC-8	600	4,500	128 pax	French Air Force + UTA charter
Royal Air Force				
Argosy	268	1,090	29,000 lbs/69 pax	
Britianna	360	4,268	37,400 lbs/113 pax	
Comet	480	2,500	44 pax	
Hastings	302	1,690	50 pax	
VC-10	580	3,668	59,000 lbs/150 pax	
USAF				
C-124	230	4,030	26,375 lbs	
C-130A	384	2,200	98,000 lbs	1960 New Tape
C-130E	384	2,487	109,000 lbs	1964 Dragon Ops
C-121	254	2,100	VIP configued	Presidential transport
C-133	300	4,000	52,000 lbs	
C-135	530	9,200	89,000 lbs/126 pax	
H-19	110	360	3 crew/8 pax	US Army
H-21	98	300	14,000 lbs/20 pax	
H-34	132	478	2 crew/16 pax	US Army
T-28	190	1,000	1,000 lbs ordanace	CIA run
B-26K	284	1,400	4,000 lbs internal/ 5,500 lbs external 14x 50 cal machineguns in nose	CIA run
RC-97	300	4,300	Intelligence Collector	USAFE asset based at Rhein-Main AFB

Acknowledgements

A number of individuals made this study possible. At the Airpower Research Institute, I would like to thank Col. Al Howey, Lt. Col. Eric Ash, Dr. Jim Titus, Dr. Dan Mortensen, Dr. Ken Werrell and Mr. Larry Geldmeier. Dr. Lee Dowdy, Ms. Tawanda Eaves, and Ms. Cathy Parker provided critical support in editing and illustrating the manuscript. Mr. Daniel Armstrong at the Air University Press provided exceptional graphic support including all the map and aircraft silhouettes.

My research was aided by Mr. Milton Steele and Mr. Joe Craver of the Air Force Historical Records Agency. The interlibrary loan staff at Air University Library headed by Ms. Edith Williams was immensely helpful in obtaining countless books and magazines.

Gen. William M. Shaw (USAF Retired) and Col. Bob Prochko (USAF Retired) both veterans of the 1960 airlift, were extremely helpful in understanding the challenges and threats of this African airlift. Mr. Harry Heist, the Air Mobility Command Museum Historian helped in getting details right for this study.

The study was made possible by the support of my family Sheila-Llyn, Viktoria, and Alexandra.

The Author

Captain Gilles Van Nederveen is Associate editor of the *Aerospace Power Journal* at Maxwell AFB. A career intelligence officer, his previous assignments included RC-135, E-8, and EC-130 flying tours. In addition to having served as an airborne intelligence officer, he has also served as a political-military affairs officer, signals and imagery analyst, and test engineer.

Air University

Donald A. Lamontagne, Lieutenant General, USAF, Commander

College of Aerospace Doctrine, Research and Education

Bobby J. Wilkes, Colonel, USAF, Commander

Air Power Research Institute

James R. W. Titus, PhD, Dean of Research, Air University

Allan W. Howey, Colonel, USAF, Director