STRATEGY RESEARCH PROJECT

The views expressed in this paper are those of the author and do not necessarily reflect the views of the Department of Defense or any of its agencies. This document may not be released for open publication until it has been cleared by the appropriate military service or government agency.

NECESSARY ALLIANCE: DEVELOPING A REGIONAL MULTI-NATIONAL COUNTER-DRUG CENTER TO STEM THE FLOW OF COCAINE IN THE AMERICAS

BY

LIEUTENANT COLONEL MICHAEL E. FOX
United States Army

DISTRIBUTION STATEMENT A:
Approved for Public Release.
Distribution is Unlimited.

USAWC CLASS OF 2001

U.S. ARMY WAR COLLEGE, CARLISLE BARRACKS, PA 17013-5050

20010605 180

USAWC STRATEGY RESEARCH PAPER

Necessary Alliance: Developing A Regional Multi-national Counter-Drug Center to Stem the Flow of Cocaine in the Americas

by

LIEUTENANT COLONEL MICHAEL E. FOX
Department of the Army

COLONEL TOM MCSHANE
Project Advisor

The views expressed in this academic research paper are those of the author and do not necessarily reflect the official policy or position of the U.S. Government, the Department of Defense, or any of its agencies.

U.S. Army War College
CARLISLE BARRACKS, PENNSYLVANNIA 17013

DISTRIBUTION STATEMENT A:
Approved for public release.
Distribution is unlimited.

ABSTRACT

AUTHOR: LIEUTENANT COLONEL MICHAEL E. FOX

TITLE: Necessary Alliance: Developing A Multi-national Regional Counter-Drug Center to Stem the Flow of Cocaine in the Americas

FORMAT: Strategy Research Project

DATE: 01 April 2001 PAGES: 46 CLASSIFICATION: Unclassified

This research paper examines the history behind the advent of cocaine as a controlled substance, the historical information as it applies to the production and movement of cocaine throughout the Americas, the need for a revamped regional counter-drug strategy, and culminates with the proposal that the best corrective action is in the form of a regional counter-drug center. The establishment of this center combines the current goals and objectives of the US State Department, the Office of National Drug Control Policy, and the existing national level strategies targeting the production and distribution capabilities within the source and transit zones of this hemisphere. In summary, it provides a clear requirement for the creation of a regional multi-national counter-drug center in an effort to expand the regional interdiction of illicit drugs.

TABLE OF CONTENTS

ABSTRACT....iii

TABLE OF CONTENTS....v

PREFACE....vii

NECESSARY ALLIANCE: DEVELOPING A REGIONAL MULTI-NATIONAL COUNTERDRUG CENTER TO STEM THE FLOW OF COCAINE IN THE AMERICAS....1

THREAT TO U.S. NATIONAL SECURITY....2

THE "WAR ON DRUGS"....2

REGIONAL AND GLOBAL IMPLICATIONS....4

HISTORICAL PERSPECTIVE....7

COCAINE – PAST AND PRESENT....7

EVOLUTION AS A CONTROLED SUBSTANCE....8

REGIONAL OVERVIEW....11

EXISTING THREAT – GROWTH AND PRODUCTION....11

MOVEMENT TRENDS....13

COALITION BUILDING....15

U.S. ORGANIZATIONS....15

CERTIFICATION PROGRAM....20

A RENEWED STRATEGY....21

A NEW GLOBAL FOCUS....21

REGIONAL INITIATIVES....22

DEVELOPING A REGIONAL COUNTERDRUG CENTER....25

WHO, WHAT, WHEN, WHERE AND HOW....25

A REGIONAL COUNTERDRUG FORCE....28

CONCLUSION....29

ENDNOTES....31

BIBLIOGRAPHY....35

PREFACE

The neighborhoods just west of downtown Los Angeles are known for their varied Mexican food restaurants. Many go there to relax, to eat dinner, to read the newspaper or a good book, and some just to sit and watch the world around them. Unfortunately, these restaurants exist in an area that is essentially a rampant open-air drug market. Local gang members ply their product in plain view to anyone who cares to pay.

A typical incident involves an aging baby-boomer driving some type of luxury car, handing some cash to a local Latin gangster, and in return receiving a small plastic bag. The baby-boomer then drives away, the whole transaction taking no longer than fifteen seconds. This is a scene played out thousands of times daily all over Los Angeles, not to mention many other communities, both large and small, across the United States.

The locals see a spoiled gringo driving a luxury car, probably living in one of those palaces up in the hills, with nothing better to do with his time and money than buy and take drugs. Additionally, the gringo bought these illicit goods from a good for nothing-armed thug who has little or no respect for anything or anyone. Both of these individuals are engaged in acts that degrade both themselves and their communities.

These locals are not highly trained drug experts, but they are experienced. They live amidst the problem on a daily basis and are capable of defining the essential nature of the drug crisis which links the United States and Latin America together in disgrace better than any "drug expert" or professor.

The illicit drug trade brings with it more than enough blame for everyone. Illegal drug production and consumption has the unique ability to highlight the absolute worst of both the United States and Latin America. The fact is that the vast majority of Americans doesn't buy or use illegal drugs and only a minority of Latin Americans have anything to do with cultivating, transporting, or selling them.

The United States has evolved a culture that has an insatiable appetite for both legal and illegal drugs, causing Americans to spend billions of dollars each year buying them. And this does not take into account the social, criminal, and health care costs that are second and third order affects attributed to illicit drug use. It has been surmised that these drug expenditures could have bought college educations for 1 million people, or 22 billion gallons of milk to feed undernourished babies. Indeed, this appetite is a very scourge on the people of the United States.

What must be done to counter the drug crisis is simple; develop and implement a domestic and regional counter-drug strategy that focuses on education, opportunity, alternative

development and rigorous law enforcement efforts. Education applies to the Americans who are driven by a desire to use this illicit product AND to the producers in the Andean Region of Latin America. Opportunity and alternative development are directed towards those poor South American farmers who grow, harvest and produce the initial cocaine paste because the cost is minimal and the return large. A rigorous law enforcement effort is needed throughout the Americas. This paper will suggest that the best way to achieve this regional focus on production and movement is to evolve a regional Multi-national Counter-drug Center (MCC).

If we cannot succeed in curing this ill of the people, we have no one to blame but ourselves.

NECESSARY ALLIANCE: DEVELOPING A MULTINATIONAL REGIONAL COUNTERDRUG CENTER TO STEM THE FLOW OF COCAINE IN THE AMERICAS

The National Drug Control Strategy is the foundation upon which the many arms of the American political and social systems are joined in a common effort – the goal of creating a drug free America. The strategy has five central goals:[1]

1. Educate and enable America's youth to reject illegal drugs as well as alcohol and tobacco.
2. Increase the safety of America's citizens by substantially reducing drug related crime and violence.
3. Reduce health and social costs to the public of illegal drug abuse.
4. Shield America's air, land and sea frontiers from the drug threat.
5. Break foreign and domestic drug sources of supply.

The central goals of this strategy make it absolutely clear that there is no single or magical solution to America's drug problem. Drug use and abuse is a regional challenge to all sections of society, young and old, rich and poor, educated and under-privileged, urban and rural, conservative and liberal. Throughout America crime, health care costs, and the general demise of the family cause despair and hopelessness to crush communities as a whole. These problems extend beyond America's borders and include the whole of Latin America. Many of the fledgling governments within this hemisphere also run the risk of evolving as Narco-democracies. Indeed the impact of drug abuse is now being felt throughout this hemisphere and the world.

This paper will specifically address, from a law enforcement standpoint, a proposal that directly supports goals four and five. The proposal to establish a Multinational Counterdrug Center will be shown to have the ability to significantly impact the production and availability of illicit drugs. In framing this proposal this paper will provide a review of the history behind the advent of cocaine as an illicit drug, the on-going counter-drug initiatives sponsored by the United States, and a profile of the current production and movement trends designed to market this destructive menace in America.

Illicit drug use has a structure comparable to the law of supply and demand. Unfortunately, the availability of illicit drugs means that the likelihood of drug abuse will remain a dangerous reality. The recommendation of this research project for the establishment of a Multinational Counterdrug Center will provide those law enforcement and military support agencies tasked with defending America's borders, both foreign and domestic, a more synchronized manner with which to perform this foreboding task. In short, a Multinational

Counterdrug Center can be the organization that provides a regional approach to a regional production and distribution problem. The Multinational Counterdrug Center will allow member nations to coordinate and synchronize counterdrug operations in the most efficient and effective manner.

THREAT TO U.S. NATIONAL SECURITY

THE "WAR ON DRUGS"

Since before the collapse of the former Soviet Union and the WARSAW Pact, the United States has struggled with ever-changing definitions of national security and foreign policy. This struggle to redefine national security and foreign policy stems from the recognized rise of nontraditional elements or transnational issues. Transnational issues are issues that transcend national borders and whose solutions can be attained only through international actions.[2]

The metaphor "War on Drugs" is inadequate to describe this now decades old menace facing the Americas. Dealing with the problem of illegal drug abuse is more akin to dealing with cancer. Like cancer, drug abuse still seeks a universal cure and exists as a struggle for those battling the disease and those around them.

The "War on Drugs" is also anything but a conventional struggle. Conventional wars are relatively straightforward. The enemy is identified, forces and a Commander In Chief are selected, the Commander In Chief is given a mission and the required resources, and he or she is then allowed to prosecute the war. Unfortunately, the battle against the trafficking of illicit drugs is more complicated than dedicating a military effort in any conventional theater. Without the political recognition of a "sworn enemy", the attitudes of the producing nations differ from those of the using nations. Those countries involved in production of illicit drugs cite the great demand as the reason for the drug problem. They reason that without demand, the efforts of drug organizations to meet supply side requirements would eventually vanish. Thus, all actions centered on proactive interdiction efforts too often result in unacceptable political consequences abroad.

Political rhetoric aside, the trafficking and use of illicit drugs exist as a preeminent transnational threat. Since the early 1900's drug abuse has been an escalating problem in the US. The effects of illicit drugs permeate American life and detract from American quality of life. Money laundering, violence, corruption, and health problems affect all Americans either overtly or covertly. There is little debate that these consequences of drug abuse exist globally, which confirms the fact that the scourge of drugs is a serious threat worldwide.

Between 1972 and 1995 each elected Administration pledged a robust effort against the drug problem in America. Soon the American people were all too familiar with the "War On Drugs."

Unfortunately, time and bureaucratic waste have done little to deter the drug threat. It takes more than rhetoric to defeat this threat. A policy is needed that ensures that regional interdiction is combined with a robust effort within the source countries to deter production. It means little to say that 1,000 metric tons of cocaine were intercepted when as much as 10,000 metric tons may have gotten through and are now being sold on America's streets. In fact, on an annual basis of the potential 750 metric tons of cocaine that could be produced in Peru and Colombia, over 350 tons make their way into the United States.

In 1986, President Reagan signed a national security decision directive that equated the impact of drug trafficking to "threat to the national security of the United States" and directed all federal agencies with a role in drug enforcement, including the Department of Defense, to pursue counter-drug efforts more actively.[3] However, it was not until 1991 when the military's involvement in the war on drugs was questioned on the Congressional floor by Congressman Jack Davis (R-IL) who said: "When you have a war, who do you call in? You call in the Military."[4] The military was reluctant to join in the counter-drug effort. It remained tied to a traditional role readying itself for a total effort against historical Cold War threat, the Union of Soviet Socialist Republics. The military leadership understood the use of the military to counter a transnational issue was an effort with no visible solution. Additionally, the American public has never been comfortable with the idea of using the United States military in any type of constabulary role.

In the early 1990's President Bush committed the military to the counterdrug effort. Since then the military has maintained a functional, yet uncomfortable role. Historically, the United States military has never been completely comfortable performing what are best characterized as police or constabulary actions. This is especially true of the counter-drug effort as the military views it as a no win situation. In American culture, if you are not a winner, you are a loser. This is a role the military has fought to avoid since the end of the Vietnam War.[5]

Drug trafficking, as a transnational threat, requires constant review of the threat to ensure that all steps have been taken to maximize deterrence or elimination of the threat. This review ensures that all available resources are used in an effective manner to deter know production and trafficking efforts. This review process is reflected in the annual National Security Strategy. The 1999 National Security Strategy stated that there are three core objectives to this strategy:[6]

1. To enhance America's security.
2. To bolster America's economic prosperity.
3. To promote democracy and human rights abroad.

Out of the National Security Strategy the United States Drug Control Strategy is developed. A specific aim of the United States Drug Control Strategy is to cut illegal drug use and availability by 50 percent by the year 2007.[7] This demands a more robust and coordinated international counter-drug effort. The focus needs to expand to stopping the production and flow of cocaine and its derivatives within the source countries and throughout the Americas, also known as the transit zone. The transit zone is defined as that area from the source countries to the borders of the United States. However, in an era of globalization, these borders may well extend beyond this hemisphere and include any foreign border into which cocaine is moved for further distribution, i.e. Germany, England, or Russia.

The establishment of enhanced cooperative military and law enforcement links is essential to provide the operational framework required to more successfully attack the production and trafficking of illicit drugs. At the same time, deterrence of this transnational threat will strengthen emerging democratic institutions throughout the Americas, assist in deterring corruption, stabilize areas that are victims of false economies, and promote additional safeguards for human rights while building increased respect for the rule of law.[8]

REGIONAL/GLOBAL IMPLICATIONS

The use of illicit drugs jeopardizes all facets of society on a global scale. The formal and informal systems designed to control individual and group behavior are repeatedly challenged by the negative impact of illicit drug use.

Around the world the production, transportation, dissemination and use of illicit drugs results in a varied and complex array of social problems and disorders such as transnational crime, social issues, and significant health problems.

Once, transnational crime was organized along relatively simple lines and involved a limited number of activities. Today it is profoundly diversified and widespread. Many authors compare today's transnational crime organizations to licit ones. Former Senator Kerry defined each as large, widespread, and impersonal corporations, intended to make profit, conquer new markets, and circumvent law enforcement and regulatory efforts.[9]

For most Americans the problems of drug trafficking, organized crime and terrorism have always been obvious issues of concern. However, historically, drugs were only a danger to a

small percentage of the citizenry; organized crime was a known menace, but restricted to car theft, gambling scams, and racketeering in larger cities. Terrorist groups were absolutely dangerous, but were usually operating in foreign countries and could only muster up an occasional suicide bomber.

Between 1945 and 1990 as Americans focused on the Cold War threat, transnational crime flourished, just as it does today. Defenses have always existed to counter crime, terrorism, information warfare, and the proliferation of weapons of mass destruction. What wasn't truly realized was the breadth, depth, and impact of such threats. The new permeability of frontiers, the opening up of national economies and the rapid pace of international trade allow transnational criminals to operate freely and successfully.[10]

No area of criminal activity is more advanced or has greater global implications than crime involving technology and computers. The importance of emerging technologies and the significance of global computer networks cannot be overstated. Terrorists, transnational criminals, and intelligence services are quickly becoming aware of and exploiting the power of information tools and weapons. Transnational criminal organizations, criminals, and terrorists take advantage of the weakness of institutions and of the State on a global scale. Like legitimate businesses, transnational criminal enterprises embrace globalization by adopting new communications and transportation technologies that allow them to pursue legitimate global markets. These efforts provide the foundation required for the laundering of vast amounts of money made from the production, transportation, and dissemination of illicit drugs.

Existing criminal organizations are not monolithic, but act as networks, pursuing the same types of joint ventures and strategic alliances as legitimate global businesses.[11] The diffuse and dynamic nature of transnational operations makes criminal enterprises such as Russian organized crime groups, or the Colombian and Mexican narcotics cartels, all deeply involved in the illicit drug trade, difficult to identify and counter.

Money laundering is an example of global and borderless crime that plagues each nation. Today money laundering is primarily linked to the movement of illegitimate monies gained through the transaction of illicit drugs. Unfortunately, the billions of dollars they represent provide legal benefits to very few individuals, corporations and countries. They ultimately represent illegal gains concealed or disguised to appear legitimate, thereby helping to evade detection, prosecution, seizure, and taxation.

Crime is a significant social consequence of illicit drug use. Documented incidents of social crime appear to be tied to both the illegal acquisition and distribution of illicit drugs as well as a major consequence of their addictive potential. Medical and criminal records for the past

decade attribute a significant rise in the numbers of incidents related to cocaine or crack abuse. Over 26% of all incarcerated inmates cited drug involvement as a primary motive for their crime.[12] Thus, it is safe to conclude that the use of illicit drugs, especially over the long term, does have the potential to cause violent behavior, including acts of burglary, larceny, assaults and killings, drug exchange or distribution disputes, territorial disputes, the elimination of rival dealers.

Drug trafficking throughout the Americas and drug use in the United States also presents economic problems that could potentially destabilize many fledgling democracies in this hemisphere. For the United States, while the economics of drug abuse are not of a destabilizing, they do present all United States taxpayers with a monumental burden to bear.

Statistics claim that one in nine Americans admit to using some form of illicit drug; the rate of increase in drug use by teenagers has more than doubled since 1994; and there are well-established links among drug use and crime and violence. The demand for drugs has created a climate of fear in many neighborhoods; drug-related violence and crime are not only prevalent in large cities, but have spread to small towns and rural areas as well. The social cost of combating drug-related crime is overtaxing both the criminal justice system and American jails.

The health care system is also in danger of being overburdened. Those who use drugs by sharing contaminated needles spread the AIDS virus and other diseases. Those who seek medical and psychological rehabilitation to free themselves from drug addiction are draining assets that could be used to treat people with disorders unrelated to drugs.

The Office of National Drug Control Policy has conservatively estimated that the real costs to the American public are as follows:[13]

1. Americans spend about $49 billion dollars annually to buy illegal drugs.
2. Federal, state, and local governments collectively spend $30 billion in supply and demand reduction efforts and in dealing with related problems.
3. The social cost of drug-related crime is $67 billion.
4. There are 25,000 drug-related deaths of United States citizens and hundreds of thousands of babies exposed to illicit drugs in utero.

There are other indirect costs as well. Business and industrial leaders are aware that drug abuse is reducing their profits through lost efficiency and diminished productivity, accidents, medical expense, absenteeism, and theft by employees to support their habits.

No nation, even one as strong as the United States, can long afford to lose over $146 billion annually from its economy. Neither can it indefinitely absorb the level of damage being done to its social institutions as a direct result of the trafficking and use of illegal drugs. So it

must be remembered that while the economic costs can be effectively calculated, no society can ever quantify the misery that drug abuse and drug trafficking causes.

HISTORICAL PERSPECTIVE

COCAINE – PAST AND PRESENT

In the Andes Mountains of Peru grows a plant called Erytroxylaceae or, as it is better known, Coca. The practice of growing the coca plant has its early traditions in the ancient Incan Empire. The Peruvian Incan Indians grew coca for medicinal purposes as well as for use in religious rituals in which respect was given for "Pacha Mama" or "God of Earth".[14] The Incas practiced chewing coca leaves as a method of easing hunger, as protection from the cold in the high Andean altitudes and for creating a state of well being. It is assumed that up to 70 distinct folk medicines are based on one use or another of coca leaves and over 80 percent of the rural high-Andean population use the coca leaf for some form of healthcare purposes.[15]

The chewing of the coca leaf is a traditional habit of the native populations of South America. Throughout the Andes region coca-leaf tea is still used as a remedy for an upset stomach.[16] Since only a small part of coca is used for legal purposes, the Peruvian Government, together with the United States Government is working on developing alternative cash crops for peasants to use. The Peruvian Government is urging peasants to switch agricultural production from coca to coffee, cacao, legumes, rice, and corn in order to increase the licit economy and to generate income and employment.

Cocaine first appeared in the United States during the 1880's as a new and experimental drug designed for therapeutic use. It was not long before the demand of the market place allowed the unchecked production of cocaine for consumer use. Subsequently, between 1890 and 1920 the pharmaceutical industry promoted cocaine as a new wonder anesthetic and caused it to become one of the top five products of United States pharmaceutical manufacturers. The pharmaceutical industry grabbed every opportunity available to promote cocaine's utility as a topical anesthetic. Cocaine derivatives in the form of ointments or solutions were used to relieve everything from asthma and nasal or sinus irritation, to toothaches and hemorrhoid discomfort, to cures for corns and bunions.[17]

It was not until 1885 that medical journals began to carry articles that warned of the danger of cocaine use and overuse. Recognition of the potential harm that resulted from the use of this new drug served to promote the need for greater medical control over drug development and distribution. Medical organizations and elements of local, state and federal government used cocaine to demand broader regulatory controls over drug production.[18]

Also during the 1890s there appeared the first coalition of groups that recognized the adverse and addictive effects of cocaine. Much like today they were comprised of individuals from the public sector working in the areas of public health, child welfare, social work and, a rising area of concern, temperance. However, their efforts were spurred more by an interest in gaining government control over the pharmaceutical industry rather than in gaining awareness of the dangerous nature of cocaine.

It is unfortunate that the warnings about cocaine provided during late 1890's and the early 1900's went unheeded. In fact, as drug abuse became a more familiar problem in America the drug of concern was opium. It is, however, interesting to note that the first cocaine users were predominately physicians. This makes sense as they had ready access to the drug and used it to relieve feelings of melancholy, exhaustion, depression, and a general feeling of being overworked.

EVOLUTION AS A CONTROLED SUBSTANCE

Around 1885 Peruvian farmers began to exploit this Andean herb. Coca, in its raw form, was in such demand that it had evolved into a regional export. Medical requirements for coca were growing at an exponential rate. The world had entered its first coca frenzy and Peru was the sole supplier.[19] Interestingly, coca also grew wild in both Colombia and Bolivia. However, neither the Colombians nor the Bolivians had realized the economics of coca.

With no competition Peru evolved as the world's largest exporter of raw coca. By 1905 Peru ranked number one as the producer of cocaine hydrochloride itself. Europeans joined wealthy Peruvian landowners in the coca farming and production effort. They reconfigured regional farming efforts to concentrate on the demand for coca and cocaine by the United States, Germany and France. Peruvian farmers discovered that with little or no farming skills and on an area as large as 135,000 hectares (or 540 square miles) some 95,500 metric tons of dry coca leaves per year could be cultivated.

Numerous German researchers began experimenting heavily with Peruvian coca leaves trying to extract coca's active ingredients. This effort led to German research efforts using cocaine as a form of treatment for morphine addiction and the clinical use of cocaine as a local anesthetic. This allowed Germany to evolve as the world's leading producer of cocaine. These efforts did not go unnoticed by the German government and attempts to prescribe a viable drug control program were noted as early as 1911. Unfortunately, by 1913 cocaine only faced limited regulations, the most stringent regulations concerning dangerous or addictive drugs targeted morphine.[20]

Cocaine began to attract addicts as a stimulant and cure-all during the latter part of the nineteenth century. Once introduced to the West it was considered to be a type of "miracle elixir". The first recorded introduction of coca to the West was by Angelo Mariani of Corsica, who brought the Peruvian shrub to his native land. After importing tons of coca leaves to Corsica, Mariani produced an extract that he mixed with wine called "Vin Coca Mariani". By 1885 Vin Coca Mariani had reached America and was an immediate success. It was advertised as a magical beverage that would free the body from fatigue, create a lasting sense of well being, and would cure depression.[21]

The success of Mariani's product stimulated John Styth Pemberton of Atlanta, Georgia to develop the famous American soft-drink Coca-Cola. Pemberton, drawing on the success of Angelo Mariani's Coca wine, developed a new product that he registered as French Wine Coca--Ideal Nerve and Tonic Stimulant. While Pemberton's French Wine Coca was originally developed as a medicine, in 1886 he added another ingredient turning it into a soft drink. Pemberton named his new soft-drink "Coca-Cola". In Pemberton's version of Coca-Cola, the stimulant effects of Coca-Cola were mild and failed to represent a national health concern. Today's Coca-Cola incorporates a "decocainized" extract of the coca leaf in one of its flavoring compounds.[22]

With the turn of the century coca had been introduced to the west as both a medicine and an elixir. People were looking for a new drug that prevented fatigue and healed the body. Dr. Theodore Aschenbrandt of Germany searched for the beneficial effects of cocaine, particularly its ability to suppress fatigue. Others, like the famous Viennese neurologist Sigmund Freud, experimented with cocaine to ease as an effective cure for discomfort from fatigue, depression and nervous disorders.[23]

By the early 1900's, the terms "dope" and "dope fiend" were used routinely to describe cocaine and the cocaine user who would do anything to get the next dose of cocaine. The drug's bad reputation combined with stricter laws against sales and possession led to less and less use of cocaine in the first few decades of the twentieth century. The Harrison Act of 1914 was enacted as the first major step by the Federal government in the direction of drug prohibition.[24] Following the Harrison Act was the Eighteenth Amendment and the National Prohibition Act[25] and the enabling legislation of the Volsted Act, all designed to curb individual excesses.

The concerted efforts of numerous organizations that led to the passage of the Harrison Act also led to the creation of the Bureau of Narcotics.[26] Prior to the Harrison Narcotic Act of 1914, drug users and addicts were free to purchase their drugs legally through registered

suppliers or with physicians' prescriptions. Originally, the Harrison Act was merely drug record-keeping. It was basically a taxing measure with emphasis on drugs produced outside of the United States, such as opium and cocaine. The law did not prohibit possession of such drugs; they were available for purchase on the open market. They were uncontaminated and could be purchased literally with pocket change. There was virtually no disorder because of the low price of legal narcotics. It was unnecessary to steal or rob or turn to prostitution in order to purchase drugs. The word violence was rarely heard in connection with drug use during those pre-illegal drug years. There were no gangs, no killings over turf, and no drug lords. However, the job of the Bureau of Narcotics was to ensure that all drug users were made criminals. The first effort by the government to provide legal oversight had been made.

Internationally efforts to limit the further development of morphine and cocaine based drugs also increased between 1905 and 1917. These attempts to negotiate regulatory levels agreeable to all, however, were seldom found acceptable to the Germans, who were focused on finding some sort of miracle cure. Additionally, most European governments were of the opinion that domestic drug abuse was a minor social dilemma requiring local legislative solutions. The end result was that by 1917 only modest agreements concerning morphine existed on an international basis.

By 1919 the world had lived through a violent world war that had raised the awareness of government and military leaders to the necessity for increased medical support for the military. In point of fact, the medical horrors of World War I had driven most nations to expanding their experimentation with morphine as a battlefield drug. The dramatic medical indicators previously noted with morphine and cocaine were now of new importance. However, between World War I and World War II, the United States managed to reduce its overall level of opiate consumption through a series of demand-side measures. By banning legal narcotics sales between 1914 and 1923, the United States gained the instruments to suppress legal use, effecting a gradual gross reduction in use. Simultaneously, a mass campaign of education and moral injunction was initiated to educate the American people in an effort to eliminate addition. While the government hoped to use peer pressure to forestall abuse, the period of 1920 to 1940 was one that recorded extensive experimentation with morphine and cocaine. So much so that there was a dramatic rise in the number of addicts and incidents of illicit trafficking. Unfortunately, on the domestic and international levels substance abuse was still seen as a victimless crime.

By the 1960s, the cost of growing coca leaves was minimal and the return for selling the cocaine derivative enormous. The law of supply and demand had been realized in South America. With traditional Latin American economies in shambles, all elements of society were

looking for any means of financial support, both long and short term. The coca leaf and its derivatives now proved to be the low cost-high return product that was readily available in the region. Still unrecognized was the threat cocaine posed as it evolved to a new and more dangerous level.

It was not until 1970 and the passage of the Controlled Substances Act (CSA), Title II of the Comprehensive Drug Abuse Prevention and Control Act of 1970, that there existed the legal foundation of the government's fight against the abuse of drugs and other substances.[27] This law is a consolidation of numerous laws regulating the manufacture and distribution of narcotics, stimulants, depressants, hallucinogens, anabolic steroids, and chemicals used in the illicit production of controlled substances.

REGIONAL OVERVIEW

EXISTING THREAT – GROWTH AND PRODUCTION

Peru, as the world's largest single source of coca leaves, provides about two-thirds of the total cocaine produced in the world. As stated earlier, coca cultivation remains a centuries-old tradition practiced by the ancient Andean Inca Empire. The Peruvian Government allows 14,000 kilograms of coca for indigenous and medicinal purposes, such as coca leaf chewing and coca-tea. The reason for this exemption on coca production is based on the Peruvian Government's respect for its large Andean Inca population who has religious and traditional ties to coca.[28] However, it is not the minimal production and application of coca in the traditional style that has the concern of every government in the Americas. Rather their attention is focused on the production, movement and distribution efforts of narco-trafficking elements. These are the arbiters of organized crime, guerilla insurgency movements, and drug abuse problems.

The United States government initially focused on combating coca production in Peru because it was both the largest producer of coca and had the most stable government with which to work. Although raw and processed cocaine also originates in the neighboring countries of Bolivia and Colombia, Peru has always been the first link in the cocaine production chain. For over a decade Peru has faced severe economic recession, hyperinflation, and enormous foreign debt. These factors, coupled with a nearly 75 percent underemployed rate, spells trouble. Many of Peru's rural peasant farmers have turned to the most profitable cash crop in the Andes, coca production.[29]

Most of Peru's harvested coca leaves are shipped to Bolivia and Colombia for further refinement into cocaine. Next, the cocaine is smuggled to the United States for sale on the street. The United States Government is attempting to assist Peru in its fight against cocaine,

but many obstacles still remain. Peru, like Colombia to the north, has also experienced nearly 20 years of civil disobedience by several Marxist insurgency movements. The Sendero Luminoso, or Shining Path, along with the Tupac Amaru Revolutionary Movements have used peasants to grow illegal coca plants in an effort to fund their guerilla armies. The Marxist insurgency movements have additionally allied with such powerful narco-trafficking organizations as Colombia's Medellin Cocaine Cartel and the Cali Cocaine Cartel. This alliance has overwhelmed Peruvian police and military efforts to interdict coca.

The coca plant itself is a detriment to Peru's eco-system since the plant extracts nutrients from the soil and does not allow crop rotation since new replacement crops cannot survive where the coca has previously extracted soil nutrients. However, coca cultivation also negatively effects the environment. The harsh precursor chemicals used to produce cocaine paste and HCL cause deforestation as well as pollute streams and rivers. Herbicides and pesticides further contaminate soil and waterways, destroying plant and animal life. Peasants practicing "slash and burn" agriculture methods burn hundreds of trees and destroy the forests that support indigenous wildlife and eco-systems.[30]

The hazardous precursor chemical wastes are perilously affecting the unique tropical eco-systems of the region as well as the local human population. Peruvian ecological experts have discovered that many of the affected rivers are almost devoid of several species of plant and animal life as a result of chemical dumping.[31] Precursor chemicals used in coca refinement include acetone, kerosene, ammonia, sulfuric acid, and potassium permanganate. These precursors are having a deleterious affect on the local farming communities where cocaine HCL is processed. For example, the fauna and flora of the Huallaga region have decreased with hundreds of species having vanished before even having been identified by scientists. Evidence of the effect of deforestation became apparent in 1987, when torrential rains and floods caused major landslides, blocked roads, and impoverished and killed many lowland residents. Peruvian ecological researchers believe that about 800 square miles of forest have been destroyed.[32]

The practice of peasant farmers expanding coca crops also increases the deforestation process. Peasant farmers turned to coca as their chief cash crop since it was in high demand by narco-trafficking groups and insurgents. The majority of Peruvian peasant farmers are too poor to actually own their own farmland so they are engaged in "slash and burn" farming in which much of the Andes soil, wildlife, and forests are destroyed to make room for coca. The farmers also attempt to expand the cultivation of their illegal crops into the tropical areas of the Andes and in so doing compound the agricultural problems associated with coca growth and the production of cocaine.

Although cocaine cartels are not legitimate corporations and do not publish an annual report of their profits from exports, Peruvian narco-traffickers are believed to make approximately $1 to $1.5 billion a year. This profit from drug sales is about half of Peru's legal exports which are estimated at $2.5 billion.[33] Unfortunately, coca leaf production alone does not generate enormous economic profits for the peasant farmers or low-level producers of cocaine derivatives because of the huge dispersion of production. The truth is that some 30,000 families engaged in coca cultivation and 4,000-peasant landowners work for the equivalent of daily wages.[34]

However, the activities related to trafficking itself: the supply of inputs for the production of coca paste, the production of coca paste, and the distribution or trafficking activities themselves do generate economic profits. Unfortunately, these profits do not benefit the poor farmers or low-level producers. Neither are they invested in Peru. The traffickers prefer to launder profits in neighboring countries and use them to generate additional illegal profits.

MOVEMENT TRENDS

The vast majority of the illicit drugs available in the United States originates overseas and is smuggled into the United States through elaborate networks and methods. The international drug trafficking syndicates that are operating today are more powerful and sophisticated than any criminal enterprises that have ever existed. They are well organized, influential, relying on a worldwide network of personnel, technological assets and financial resources that rival those held by international businesses.

The nature of the international drug trade has changed to find the most advantageous routes available. Initially, the manufacturing and importation of that product was controlled by a group of traffickers from Medellin, Colombia. By the late 1970's, the major cocaine trafficking organizations based in Colombia relied on an intricate smuggling network that facilitated the shipment of multi-tons of cocaine predominantly through the Caribbean.

During the 1980's and early 1990's leaders of the cocaine cartels turned to traffickers in Mexico to assist them in transporting tons of cocaine into the United States. Organizations in Colombia now turned to Mexican organizations to fly large quantities of cocaine over the US-Mexican border. Mexican traffickers were so successful that they soon demanded and received payment in cocaine rather than cash. It is reported that trafficking groups based in Mexico began to charge Colombian traffickers not monetarily but in portions of each shipment to transport their product through Mexico to the United States. This allowed them to assume an even greater role in cocaine trafficking.

Today, independent groups of traffickers from the Northern Valle dal Cauca and splinter groups from the old Cali syndicates have risen to prominence and are responsible for huge volumes of cocaine and heroin being shipped to the United States through the Caribbean. These Colombian trafficking organizations have retained their presence and influence in the Caribbean. The Caribbean has long been a favorite smuggling route used by the Colombian crime groups to smuggle tons of cocaine to the United States. They retain a labyrinth of smuggling routes throughout the central Caribbean, including Haiti, the Dominican Republic and the Bahamian Island chain to South Florida, using a variety of smuggling techniques to transfer their cocaine to United States markets.[35]

Puerto Rico and the U.S. Virgin Islands provide an excellent gateway for drugs destined for cities on the East Coast of the United States. More importantly, Puerto Rico's commonwealth status means that once a shipment of cocaine, whether smuggled by maritime, air or commercial cargo, reaches Puerto Rico, it may not be subjected to further United States Customs Service (USCS) inspection en route to the continental United States. In addition, traffickers in the Dominican Republic and Haiti are now more multi-functional. They have learned how to operate as smuggler, transporter, and wholesaler in many American cities.

The Bahamas remains a central conduit for air and maritime shipments of drugs moving through the Western and Central Caribbean to the Southeast United States. Transportation groups located in the Bahamas utilize a variety of methods to move cocaine from the islands to the United States. Colombian traffickers air drop shipments of cocaine off the coast of Jamaica, or utilize boat-to-boat transfers on open seas.

Transportation groups from Jamaica and the Bahamas use small sea going vessels and Go-Fast boats to smuggle their payloads into the Bahaman chain, frequently using the territorial waters of Cuba to shield their movements.[36] The cocaine is then transferred to pleasure craft that disappear into the inter-island boat traffic. Traffickers also use twin-engine turbo-prop aircraft, with long-range capability and Global Positioning Systems, which pinpoint drop zones and meeting spots in the middle of the ocean.

It is very common for Colombian cartels interested in moving cocaine via maritime vessels to American and European markets to arrange this movement from within Colombia itself. An organization might use fleet of 8-to-10 commercial freighters capable of hauling huge loads of cocaine anywhere in the world. Typically, the cocaine will be transported from Colombia via land or air to the Orinoco River delta on Venezuela's northeast coast. Upon arrival, the cocaine will be hidden in remote jungle hideouts until the time for further movement has been determined. From these hidden locations, go-fast boats will haul the cocaine to commercial

ships stationed offshore. Once on-board, the cocaine is often concealed in secret compartments constructed for smuggling purposes. Upon reaching its intended destination, the cocaine is then off-loaded to waiting go-fast boats or other vessels and ferried ashore to locations in Europe and the United States.

However, it should also be noted that drug trafficking organizations are expanding their sphere of operations and are essentially global enterprises. More of their illicit product is moved, as described above, only the follow-on sea movement takes the cocaine to distribution points in northern Africa and Europe.

All of these examples serve as proof that the targeted drug cartels have created a decentralization of cocaine that presents international drug law enforcement authorities with new challenges. Traditional enforcement strategies and intelligence collection programs designed to target the major "Colombian Cartels" have not provided the same successes against the cocaine industry as it stands today. The current cartels focus on decentralized production and movement that involves hundreds of smaller South American trafficking organizations. This is why the international drug law enforcement effort must explore new and innovative strategies to successfully defeat the new cocaine trade structure in South America.

COALITION BUILDING

AMERICAN COUNTERDRUG ORGANIZATIONS

The United States takes a two-fold approach towards trying to make America a drug free nation. The first is policy development, managed by the cabinet level Office of National Drug Control Policy, the second consists of operational activities that are supported and executed by numerous organizations.

The Anti-Drug Abuse Act of 1988, also known as the National Narcotics Leadership Act, was amended by the 1994 Crime Control Act to establish as policy the national goal of creating a drug-free America. Key to the attainment of this goal was the establishment of the Office of National Drug Control Policy (ONDCP).[37]

The ONDCP was assigned the mission of enabling America to reach its drug-free goal. To do this the ONDCP was empowered to formulate and exercise oversight over the nation's drug control policy and programs, as provided for in the Office of National Drug Control Policy Reauthorization Act 1998.[38] This required that the ONDCP develop and implement both the National Drug Control Strategy and Budget.

To do all of this ONDCP, like most large agencies, is subdivided into various offices; each designed to provide links to law enforcement, legal counsel, legislative and counter-drug

operational entities. This expansion of the Office of National Drug Control Policy's interagency focus allows it to annually develop the National Drug Control Strategy as well as promote the implementation of drug control policies and programs at the State and local level of government levels.

The Office of National Drug Control Policy is also structured to provide input regarding counter-drug research and development, policies and programs and for substance abuse addiction and rehabilitation research. Further, it promotes technology development initiatives that support the National Drug Control Strategy.

In addition, the Office of National Drug Control Policy defines domestic and international policies and programs to reduce the demand for drugs and ensures the implementation of the demand-related portions of the National Drug Control Strategy. Demand reduction includes drug prevention and education, treatment and rehabilitation, drug programs in the workplace, and international cooperation on demand reduction.

Various other staff elements within the Office of National Drug Control Policy monitor and provide advice regarding domestic and foreign drug intelligence programs carried out by various drug control program agencies and targeted against the production, trafficking, smuggling and distribution of illicit drugs directed at the United States. This effort demands dedicated legal counsel focused on law enforcement activities that: support monitoring activities; provide advice on official statements concerning drug control measures; review proposed legislation on drug control policy; ensure compliance with Federal ethics law and regulations; safeguard Federal records; and process Freedom of Information Act requests.[39]

The Drug Enforcement Administration, which was established in 1973, is built on the successful tradition established by a number of federal drug agencies that were ultimately united under President Richard M. Nixon. The agencies include the Bureau of Prohibition, the Bureau of Narcotics and the Bureau of Narcotics and Dangerous Drugs.[40] The Drug Enforcement Administration is currently the premier agency for domestic enforcement of federal drug laws and has sole responsibility for coordinating and pursuing law enforcement driven drug investigations abroad. Given the magnitude of the illegal drug problem, the Drug Enforcement Administration is dedicated to working in close cooperation with federal, state, local, and international law enforcement agencies to eliminate drugs as a threat to American society.

The mission of the Drug Enforcement Administration is to enforce the controlled substances laws and regulations of the United States and bring to the criminal and civil justice system of the United States, or any other competent jurisdiction, those organizations and principal members of organizations, involved in the growing, manufacture, or distribution of

controlled substances appearing in or destined for illicit traffic in the United States; and to recommend and support non-enforcement programs aimed at reducing the availability of illicit controlled substances on the domestic and international markets.[41]

Indeed, as the leading federal agency responsible for enforcing federal drug control laws and for coordinating and pursuing American drug investigations in foreign countries the Drug Enforcement Administration has developed capabilities beyond those focused on the investigation and preparation for the prosecution of drug violations. This federal agency is responsible, under the policy guidance of the Secretary of State and United States Ambassadors, for all programs associated with drug law enforcement counterparts in foreign countries as well as within the United States. It is essential that the Drug Enforcement Administration exercise the ability to coordinate with federal, state, and local agencies, and with foreign governments, in programs designed to reduce the availability of illicit abuse-type drugs on the United States market through non-enforcement methods such as crop eradication, crop substitution, and training of foreign officials.[42]

The Drug Enforcement Administration also manages a national drug intelligence program in cooperation with federal, state, local, and foreign officials to collect, analyze, and disseminate strategic and operational drug intelligence information. This demands that within the agency there are personnel trained to conduct seizure and forfeiture of assets derived from, traceable to, or intended to be used for illicit drug trafficking.[43]

Also within the structure of the United States Government lie other agencies that lend support to the counter-drug effort. Not the least of these organizations is the United States Coast Guard. The Coast Guard accepted a significant role in the counter-drug effort following the first recorded instances of drug smuggling that occurred in 1870 when Chinese immigrants were caught smuggling opium in merchant ship cargoes and baggage.[44] Since then, drug smuggling by maritime routes has grown in size, scope and sophistication. For nearly a century, the maritime drug smuggling business was allowed to slowly evolve as the majority of American agencies capable of providing interdiction efforts were focused on the major events of the day, including World War I, Prohibition, World War II, and the Korean and Vietnam wars.

The government once again moved to officially task the Coast Guard with maritime interdiction through the passage of the 18th Amendment, necessitating a dramatic increase in resources and funding for the Coast Guard.[45] This dramatic increase in Coast Guard strength was required to reduce the substantial level of alcohol smuggling that was occurring. In addition, the United States Navy transferred a number of WWI-era destroyers and

minesweepers into the Coast Guard so that it could more effectively conduct maritime interdiction.

By the early 1970's maritime drug smuggling was a significant problem for the United States and the Coast Guard. This focus forced the Coast Guard to serve as the lead federal agency for supporting maritime drug interdiction. Additionally, it shares lead responsibility for air interdiction with the United States Customs Service. Together their shared mission is to reduce the supply of drugs from the source by denying smugglers the use of air and maritime routes in the Transit Zone, a six million square mile area, including the Caribbean, Gulf of Mexico and Eastern Pacific. This requires close coordination with other federal agencies and countries within the region. Established in 1989, Joint Task Force-6 (JTF-6) exists as a multi-service military oriented counter-drug organization with the following mission:[46]

> Mission: JTF-6 synchronizes and integrates Department of Defense operational, technological, training and intelligence support to Domestic Law Enforcement Agency counterdrug efforts in the continental United States to reduce the availability of illegal drugs in the United States.

It is important to note that Joint Task Force-6 neither initiates operations in the law enforcement domain nor supports law enforcement activities unrelated to drug control. For counterdrug support, it responds to requests that have been validated as having a drug connection and have been assigned a priority by civilian law enforcement agencies. Specifically, Joint Task Force-6 provides the following support:[47]

> 1. The military support it provides to domestic law enforcement agencies is divided into five categories: operational, general support, rapid support, intelligence, and engineer. Operational support involves military units conducting mission-related training such as ground reconnaissance and sensor employment, aviation reconnaissance and support, and transportation.
>
> 2. General support is the augmentation of law enforcement agencies with military-specific skills, training, transportation, canine support, communications, technology, and communications.
>
> 3. Rapid support is the immediate response to actionable intelligence and results in ground reconnaissance support and the provision of mobile training team assistance.
>
> 4. Intelligence support consists of providing specialists who can assist law enforcement agencies with training and analysis processes. This includes support with photo imagery interpretation, translator and linguistic support, and general analyst support.
>
> 5. Engineer support involves road repair and various construction projects. Typical missions include constructing border fences, lighting, and law enforcement training facilities primarily designed to assist the United States Border Patrol.

Several other joint task forces specialize in counterdrug actions. Under the 1994 National Interdiction Command and Control Plan these units were designated as Joint Interagency Task Forces. The Joint Interagency Task Forces operate under the oversight of the United States Interdiction Coordinator, currently the Commandant of the Coast Guard.

The interagency concept of the task force is illustrated by the leadership composed primarily of representatives from the Department of Defense, Department of Transportation (United States Coast Guard) and the Department of the Treasury (United States Customs Service). Other assigned agencies include Drug Enforcement Administration; Federal Bureau of Investigation; Defense Intelligence Agency; Naval Criminal Investigative Service; and the National Security Agency. In the past countries with interests in the region such as Great Britain, France and the Netherlands also have provided ships, aircraft, and liaison officers to support regional counterdrug efforts.

Successful Joint Interagency Task Force operations demand the ability to utilize and integrate Command, Control, Computers, Communications and Intelligence systems to efficiently coordinate operations and intelligence information with other counterdrug centers, law enforcement agencies, and domestic and international counterdrug partners. Additionally, there must be an ability to collect, fuse, and disseminate counterdrug information from all participating agencies to the detection and monitoring forces for tactical action throughout the region.

Joint Interagency Task Force-West (JIATF-W) was established in 1994 and represents a mix of civil-military personnel. This agency serves as the Pacific Command's executive agent for Department Of Defense support to national counterdrug initiatives in the Area Of Responsibility. Its mission is to bring Department of Defense resources to support American and foreign nation's law enforcement agencies and American embassies in their efforts to disrupt international drug trafficking.

Joint Interagency Task Force-West primarily provides intelligence information regarding the transportation of illegal drugs originating in Asia, while it supports intelligence-cued counterdrug detection and monitoring operations targeting cocaine traffickers in the eastern Pacific, and provides law enforcement agency support. [48]

Joint Interagency Task Force-East (JIATF-E) like its counterpart, Joint Interagency Task Force-West, integrates civilian law enforcement and military personnel into an organization designed to support American and foreign counterdrug efforts. Its area of responsibility includes the Caribbean and the waters bordering South America. It also works with the Latin American countries in this hemisphere to design regional counterdrug efforts.

Joint Interagency Task Force-East's mission lies within the Southern Command's Area of Responsibility and it is tasked to plan, conduct, and direct interagency detection, monitoring, and sorting operations of air and maritime drug smuggling activities. This includes the ability to plan and conduct flexible operations to detect, monitor, disrupt and deter the cultivation, production and transportation of illicit narcotics. This demands all elements operating in concert with Joint Interagency Task Force - East be able to utilize and integrate Command, Control, Computers, Communications and Intelligence (C4I) systems to efficiently coordinate operations and intelligence information with other counterdrug centers, law enforcement agencies, and domestic and international counterdrug partners.[49]

However, it is important to note that no mission can meet with real success unless it has the capability to collect, fuse, and disseminate counterdrug information from all participating agencies to the detection and monitoring forces for tactical action. This particular aspect of the Joint Interagency Task Force mission is essential to all the Joint Interagency Task Forces.

CERTIFICATION PROGRAM

The first of March each year the Executive Branch informs the United States Congress as to the level of cooperation note by those countries join in the drug war. The purpose of this report is to establish the haves and have not's for additional counterdrug support. The process is called certification.

One of the primary tools available to the United States government to provide direct monetary assistance to source and transit zone countries in the battle against illicit drugs is the certification program. Both the Office of National Drug Control Policy and the State Department play integral roles in managing the certification process. Between these two cabinet level offices a determination is made as to the progress made in deterring illicit drug activities as well as at what level a country may operate in conducting active counterdrug missions. Unfortunately, this can be a subjective process, one with a defined measurement tool. Seldom have countries been blacklisted for ineffective levels of performance.

However, it should be understood that the drug certification process should be only one tool of many to increase cooperation in international drug control. Drug trafficking and drug abuse is an international challenge presenting common problems to democratic governments throughout the world. Presently certification is seen as a vital requirement in designing an effective international drug control cooperation effort.

The certification process supports international cooperation against the common drug threat in this hemisphere. Bilateral and regional cooperation in the Andean region directly

targeted a reduction in coca cultivation, thereby reducing the potential to produce cocaine derivatives. In Peru, multifaceted mutually supporting interdiction and alternative development programs also targeted coca cultivation. In Bolivia, ongoing United States supported eradication programs have reduced net cultivation. Governments are encouraged to meet established crop reduction targets, as well as to initiate additional goals, such as the elimination of the cultivation of illicit coca.

Certification acts also to broaden and deepen American cooperation efforts throughout the region. The US/Mexico Bi-National Drug Control Strategy demonstrates the commitment of both governments to a proactive anti-drug partnership. The strategy provides the framework for bilateral cooperation against the drug problems outlined in the Bi-National Drug Threat Assessment issued in May 1997. Increased cooperation has manifested itself in improved performance. Mexico's accomplishments last year include the arrest and sentencing of important traffickers, raids against the Juarez and Tijuana cartels, disrupting their operations; publication of anti-money laundering regulations and comprehensive chemical control legislation; major justice sector reform to combat drug related corruption and improve counterdrug performance; increase in cocaine seizures by 48 percent to almost 35 metric tons.[50]

Certification means money, plain and simple. This money allows countries to develop or expand domestic and international proactive measures designed to eliminate the threat of illicit drugs and reinforce American resolve to assist in this effort. Cursory efforts to show resolve may not be sufficient to secure additional American aid in the future. The goals may have to be set higher and attainment the only acceptable criteria for success. The criteria set for certification may need to be either strengthened or more stringently enforced in order to make this program the invaluable tool it is.

RENEWED STRATEGY

A NEW GLOBAL FOCUS

Drug control remains a controversial issue. Initial American-led efforts to wage a 'war on drugs' focused on wiping out production in developing countries, but failed to dedicate the required resources. Political rhetoric from the United States was accusatory towards those countries involved in production, countries that blamed the United States for its high demand for the illicit product. Interdiction and eradication strategies became increasingly militarized. Unfortunately, the political environment in Latin America then fostered documented human rights abuses, the existence of death squads, corruption on a grand scale and environmental

degradation. To many experts the expressed strategy of a 'war on drugs' was a failure. This failure was evident given that the amount of drugs produced and drugs-linked crops cultivated did not decrease.

However, to many the 'war on drugs' has not yet been fought and lost. What is required is an innovative regional approach that would bring new confidence and resolve to regionally designed efforts to root out the drug problem. This is an important idea given that drug abuse becomes more and more a worldwide problem of epidemic proportions. It is critically important for all countries facing this threat to adopt a strong political declaration and dedicate matching resources for a renewed strategy.

The United Nations is attempting to develop a similar worldwide strategy; one that calls for a balanced approach between law enforcement, alternative development and demand reduction. This strategy provides over three quarters of the available funding for alternative development, less than one quarter for law enforcement and the remainder for demand reduction. [51]

The United Nations strategy focuses on eight key countries in three regions: Bolivia, Colombia and Peru in Latin America; the Lao People's Democratic Republic, Myanmar (Burma) and Vietnam in Southeast Asia; and Afghanistan and Pakistan in Southwest Asia. The reason for this is that any global strategy argues that the bulk of illicit opiates and coca derivatives originate in these well-defined geographical areas. [52]

Since the first global summit of the drug threat hosted by Mexico over a decade ago there has been an attempt to facilitate a worldwide debate on the efficiency and viability of anti-drug strategies, and to develop improved strategies for the next century. The old dichotomy between producer and consumer countries should give way, and the principle of 'shared responsibility' should become the cornerstone of international drugs control. This requires that the United States take responsibility to reduce demand, to control the use of chemical precursors and amphetamines, to tackle money laundering, to develop a partnership in designing linked crops and alternative development, and to move forward in developing a multinational counter-drug center within the Americas.

REGIONAL INITIATIVES

The international demand reduction programs of the United States are designed to help strengthen the ability of host nations to conduct more effective demand reduction efforts on their own. Additionally, the United States hopes to encourage drug producing and transit countries to invest resources in drug awareness, demand reduction, and training to build public support and

political will for implementing counter-narcotics programs. However, it is important to note that the drug producing countries are not confronted with the same scale of demand for illicit drugs as the United States.

The diversion of chemicals from legitimate commerce to illicit drug manufacture cannot be prevented on an individual country basis; there are too many alternative source countries for adept traffickers to turn to when effective controls deny them chemicals from one particular country. Nor can chemical diversion control be only the responsibility of chemical source countries; importing countries where diversion takes place must cooperate in efforts to ensure that their imports of drug precursor and essential chemicals are for legitimate purposes.

Developing the necessary connection between chemical source countries and chemical importing countries to curtail chemical diversion has been the principal international policy-level objective of the United States in chemical control. We are seeking to increase recognition of the need for cooperation, and working with other major chemical source and importing countries to develop mutually agreed procedures to achieve it.

The 1988 United Nations Convention against Illicit Traffic in Narcotic Drugs and Psychotropic Substances is the fundamental instrument for international counter-narcotics cooperation. Many major chemical source and drug producing countries have laws and regulations to fulfill their chemical control obligations under the 1988 United Nations Convention. Article 12 of that Convention sets out the basic obligations of signatories in chemical control, and the tables in its Annex identify the 22 chemicals most necessary to drug manufacture and, therefore, subject to control. So the foundation for international cooperation exists to ensure that traffickers cannot acquire chemicals from another source country.

Money laundering is a problem not only in the world's major financial markets and offshore centers. Any country integrated into the international financial system is at risk. As emerging markets open their economies and financial sectors, they become increasingly viable targets for money laundering activity. Increased efforts by authorities in the major financial markets and in many offshore financial centers to combat this activity provide further incentive for launderers to shift activities to emerging markets. There is evidence, for example, of increasing cross-border cash shipments to markets with loose arrangements for detecting and recording the placement of cash in the financial system and of growing investment by organized crime groups in real estate and businesses in emerging markets.

Known incidents of money laundering involving large amounts of money generated from crime are of tremendous public interest and are consequently given wide publicity. A wide range of national and international agencies have attempted to address a global money

laundering effort that totals some $3 trillion dollars per year, heavily concentrated in Europe and North America.

Numerous international efforts to deal with money laundering activities led to the G-7 to establish the Financial Action Task Force (FATF). This element was designed to define policy and to promote the adoption of countermeasures against money laundering. The focal point was to ensure that financial institution secrecy laws do not inhibit implementation of the recommendations, and to promote multilateral cooperation and mutual assistance in investigations, prosecutions, and extraditions.[53]

All of these initiatives would strengthen international cooperation efforts, which would encourage authorities to exchange information on currency flows and money laundering techniques and on suspicious transactions or operations. International cooperation should be supported by bilateral and multilateral agreements based on generally shared legal concepts. Cooperation and mutual assistance should include the production of records by financial institutions, the identification, freezing, seizure, and confiscation of criminal proceeds, and extraditions and prosecutions.

Past efforts to develop alternative crops throughout the region have habitually failed. There is a need for a balanced approach to confront high levels of illicit cultivation requires the development of national strategies which include a combination of alternative development, law enforcement activities and eradication. Alternative development is a key component of any program designed to reduce illicit drug production. This effort allows low-income peasant farmers to embrace a more sustainable as well as socially and economically more appropriate livelihood that promotes personal growth. This is lacking when these low-income farmers are faced with the harsh realities of forced eradication.

Throughout the region the issue is one of control. Colombia, Peru and Bolivia represent countries where the government does not have effective control over all its territory. Large regions of Colombia are in the hands of guerrillas, who levy taxes on the cultivation and marketing of coca leaves and coca paste. The situation is complicated by the growing influence of paramilitary forces that are allegedly backed by the Colombian army, and have excellent links with drug trafficking syndicates. Eradication efforts merely displace low-level farmers or growers. The same situation exists in Peru and Bolivia; however, insurgent activities are more removed from those of existing crime organizations.

Since 1999 the United States has dedicated millions of dollars to linked crops and alternative development in the Huallaga Valley of Peru. This program is designed to provide

assistance to some 4,000 farming families in alternative crops and agricultural activities so that they engage in a legal economy and sever their income-dependence on coca.

Future efforts must focus on past complaints concerning the lack of participation of the local populace in the identification, preparation, implementation and evaluation of projects. These complaints include insufficient knowledge of local circumstances in drug-cultivation areas; tacit acceptance of violent law-enforcement measures and human rights violations that frequently accompany counter-narcotic operations. The measure of success will be not only the evolution of internal markets for these alternative crops but also the ability to gain access into markets in the United States and Europe.

The United States is presently committed to conducting a series of studies that will allow the proper planning of future agricultural projects throughout the Andean Region. These studies will include subjects such as prevailing farming systems, farmer income, the agricultural calendar, gender analysis of agricultural production and the existing organizations, credit needs and assessment of natural resources. [54]

Naturally education is of paramount importance to alternative crop production. There needs to be a significant investment in the proper design and implementation of a regional communications strategy that targets beneficiaries, national and regional actors, as well as other institutions with an interest in alternative development. Tied with the communications effort is the need to evolve farming organizations. Once organized these groups should be assisted in developing committees to address regional requirements for production techniques, marketing and management, and the required design of supporting technological packages for raised crops. For example, there will be a constant requirement for technical assistance for the diversification and improvement of hundreds of square miles of licit crops, such as oil palm, palm heart, azarole, coffee, cashew nut, cacao and rice.

An additional significant outcome of this effort would be the acquired ability by these empowered farming groups to negotiate for funding from private banks that would promote further commercialization of agricultural products. These funds would also provide advanced training to farmers or farming organizations in management and marketing skills.

DEVELOPING A REGIONAL COUNTERDRUG CENTER

WHO, WHAT, WHEN, WHERE AND HOW

In concert with an effective eradication program and a sound method for instituting alternative crop development is interdiction. Without significant reductions in either the demand for drugs or their supply, the drug problem will continue to plague the United States. Some shift

in emphasis or increase in effort seems appropriate, and military involvement is a vital component of an effective regional counterdrug interdiction effort.

The establishment of a Multinational Counter-drug Center within the Americas provides the proper mix of law enforcement, and military and political skills required to defeat this asymmetric global threat. The evolution of the Multinational Counterdrug Center must NOT be driven by parochial political ideals. The total focus of this center must be the deterrence of both production and movement of illicit drugs within and out of the Americas.

Naturally, the creation of any new organization raises the question of leadership. The question of leadership in this instance is no less complicated than within any multi-national effort. Latin American resentment of "Gringo" control is based on historical presence. The issue of sovereignty runs deep within this effort, as all participating countries will be affected in one way or another. Additionally, there is the issue of interagency involvement. The United States has evolved a system where the interagency, law enforcement and military members work side by side. Roles, missions and function are defined to such a point that any and all debates can be settled internally. This is exactly the type of operational atmosphere required within the Multinational Counterdrug Center, recognizing that this type of relationship is atypical for many of the participants. However, it is expected that operational success will promote a slow and steady change in attitudes, operational awareness and counter-drug policy throughout the region.

As with any multinational agency the directorates established internal to the agency will design its success. The directorate structure for this multi-national agency should most logically copy that of the Joint Interagency Task Forces or the Joint Staff. In so doing it would allow the following offices or directorates to be established. Management or leadership issues such as who commands, where civilian equals or counterparts exist, what is an acceptable rotation schedule remain should be decided by those countries taking active roles in this effort.

The following line and block chart, see page 27, represents a proposed organizational structure for the Multinational Counterdrug Center, provided with the understanding that as the Multinational Counterdrug Center would evolve, it would do so based on the politics of the situation. However the functions of the directorates would be as follows:

The Personnel Directorate – Provides management for the required mix of civil-military personnel. The civilian side needs to represent all of the law enforcement agencies with responsibility for planning and conducting counterdrug operations. The military side should have individuals assigned that are experts in their field of military operations.

The Intelligence Directorate- Supports the command with reliable and timely intelligence information and provides appropriate indications and warnings on the characteristics of drug trafficking organizations. Provides intelligence support for planning purposes and tactical support for current operations. The J2 provides a fusion facility for all-source intelligence to support the counterdrug missions

The Operations Directorate- Provides the direction and control of current operations including the tasking of maritime and air assets assigned to the tactical control of JIATF East and air assts under the tactical control of other agencies. The J3 coordinates requirements to conduct counterdrug operations using its Joint Operations Command Center (JOCC), which is manned 24 hours a day, 365 days a year.

The Logistics Directorate - The Logistics division provides the planning, coordination, and supervision of supply, transportation, maintenance, repair, and engineering support necessary to maintain the operational capability of ground/riverine, maritime, and air assets.

The Plans and Policy Directorate - The plans division provides long-term planning requirements for Joint Interagency Task Force operations. The division consists of ground/riverine, maritime and air planners with operational counterdrug experience.

The Command, Control, Computers, Communications and Intelligence (C4I) Directorate - Provides the critical communications paths which enable both planning and operations to be conducted. The C4I division provides internal computer and communications system connectivity between the divisions and an external computer and communications architecture for connectivity with ground/riverine, maritime, and air assets.

The Resource Management Directorate- Provides the management of funds provided by multiple sources designed to support counterdrug planning and operational support.

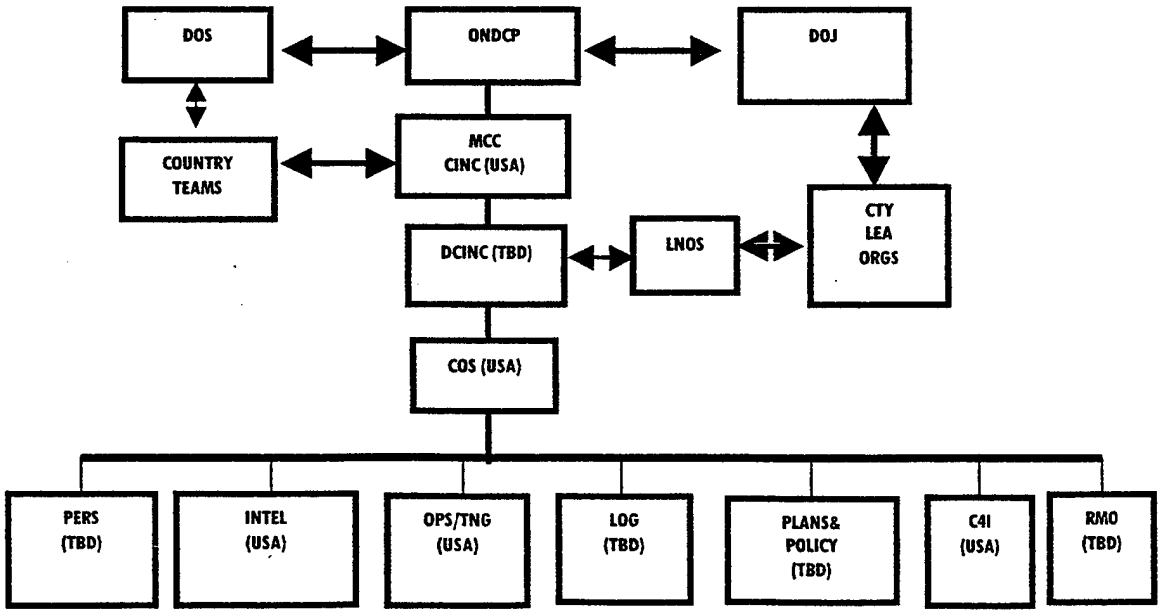

Current US law prohibits the United States military, with the exception of the United States Coast Guard, from taking a participatory role in counter-drug operations unless within specified territories adjacent to the United States. This means that the United States role within the Multinational Counterdrug Center may be limited to primarily staff, intelligence, and training support. However, from an operational standpoint the United States plays this defined role within the Multinational Counterdrug Center whereby it can assure other participating nations the protection of their sovereignty, preparedness for counter-drug operations, soundness of planning efforts, and full-spectrum intelligence support. Operational planning, coordination, and technology may be the primary focus on any United States effort. However, this agency could also be used as the corner stone for future changes to United States law.

Prior to the 1999 withdrawal of Southern Command from Panama there was a significant effort made to establish a Multinational Counterdrug Center at Howard Air Force Base, Panama. Unfortunately, politics and the limited interest of associated Latin American countries caused the plan to fade away.

Now is the time to once again introduce this proposal, whether on the floor of the United Nations or some other regional cooperative effort, and lead the political fight for its development. Deterrence of production and movement MUST be as robust and viable as the focus and efforts placed on measures favoring alternative development.

A REGIONAL COUNTERDRUG FORCE

The Multinational Counterdrug Center would join with the regional civilian and military organizations designed to counter the existing drug threat. Like the Joint Interagency Task Forces the United States element within the Multinational Counterdrug Center would operate under the oversight of the United States Interdiction Coordinator. However, at its core, the Multinational Counterdrug Center must be a multilateral organization, with Colombia, Peru, Ecuador, Bolivia and any interested countries in the region all participating alongside the United States.

Initially, Joint Interagency Task Force South (JIATF-S) developed a plan to establish a regional Multinational Counterdrug Center at Howard Air Force Base in Panama. At the end of the 1990's the United States was looking at honoring its commitment to Panama and withdrawing from that country completely. Regional political and military awareness and stability had become a reality. However, the reality of the production of cocaine within the source zone and its subsequent movement through the transit zone were all too evident.

Operationally the Multinational Counterdrug Center must include air, ground, riverine and limited sea components. There must also be a training side to the organization that extends beyond training in riverine and small unit engagement tactics, land and water navigation, law enforcement techniques and tactics.

The establishment of a Multinational Counterdrug Center would represent the establishment of an executive agent for drug enforcement policy and support. This would allow a single organization primarily to improve unity of effort. It would maintain the skills and experience required in effectively executing a multi-national operational effort as well as the ability to deal with some 50-plus National Drug Control Program agencies, Drug Enforcement Agency, private organizations, the states and territories, the military services, the United States Coast Guard, the National Guard Bureau, and the unified commands. It would have operational and drug law enforcement support responsibilities for the United States and its territories. For matters within host nations, the Multinational Counterdrug Center would take on an essential support and coordination role, helping the execution of regional counterdrug efforts.

This means that this organization would be recognized as an approved coordinating authority in order to coordinate and address the global aspects and proposed counters of narco-trafficking.

As national security experts continue to evaluate the global environment, strategic assessments will likely include the issues concerning transnational threats such as drug trafficking, terrorism, international organized crime, and failed or failing nations. The drug threat will loom large in any such assessment. This fact demands that the powers in the region move away from separate operational structures organized around regional domains in favor of a multi-functional, multinational interagency effort that can rapidly deal with the interagency and transnational aspects of this threat.

CONCLUSION

There is little debate as to the need for a more focused and regional counter-drug strategy. However, any future counterdrug strategy must respect human rights, safeguard the environment, and ensure producer's participation. Failure over the long term will encourage governments to use repressive measures such as forced crop eradication, as it is highly unlikely that alternative development can achieve desired levels of crop elimination in the near term.

The drug problem cannot be resolved simply. If there is one lesson to be learned from previous drug-control efforts, it is that every policy attempted has failed. Forced eradication,

alternative development and even demand reduction have had little impact on either the supply or demand of narcotics.

Eradication remains the best solution to the drug problem. However, the region agrees with a UN proposal that calls for the elimination all illicit coca and opium poppy cultivation in ten years, who will ensure this plan comes to fruition. To succeed, this ambitious plan will require a balanced approach to eradication and law enforcement efforts. It will require the expanded support of new technologies such as satellite monitoring and improved chemical and biological counter-drug agents.

Setting a target date to eliminate coca bush and opium poppy cultivation may be a positive measure, a goal to set before the United Nations as a whole. But the reality is that producer countries are simply not in a position to comply with such directives. More important, any effort to force adherence to this goal may pose a serious threat to human rights, the environment, and the continuing participation of producers in developing and implementing viable alternative development projects. But experience has shown that alternative development is not a miracle medicine and can be counterproductive. Yet while alternative development has never resulted in the total elimination of drugs-linked crops, neither has interdiction or eradication. The facts are that farmers diversify into new crops, but still retain coca. They have learned to wait and see if alternative projects work and if prices for new crops remain stable before abandoning coca-production.

This paper proposes the establishment of a Multinational Counterdrug Center with a mission to support the elimination and deterrence of illicit drug production and movement throughout the region. This multinational interagency effort would result in effective collaboration and civil-military cooperation. It would integrate counterdrug education, training, and operational efforts on a regional basis. It would ensure the best use of all available intelligence, law enforcement and operational assets; build trusted partnerships that would multiply its effectiveness across the operational spectrum; and deliver the information required in the form required where and when it is needed to support interdiction efforts.

The goal of any regional counter-drug strategy remains the elimination of the illicit cultivation of coca, and of the production of illicit coca derivatives. The successful accomplishment of this mission is fraught with challenges, both foreign and domestic. However, with the establishment of a Multinational Counterdrug Center the foundation will be made for a more centered and coordinated effort to defeat this transnational threat.

WORD COUNT - 12,358

ENDNOTES

[1] US Government, National Drug Control Strategy (Washington DC: The White House, 1999), 7.

[2] Donald M Snow and Eugene Brown, Puzzle Palaces and Foggy Bottom (New York: St Martin's Press, 1997), 17.

[3] J.F. Holden-Rhodes, Sharing The Secrets (Westport, Conn; Preager, 1997), 55.

[4] Ibid., 58.

[5] Donald M Snow and Eugene Brown, Puzzle Palaces and Foggy Bottom (New York: St Martin's Press 1997), 19.

[6] US Government, National Security Strategy 1999 (Washington DC: The White House, 1999), iii.

[7] Ibid, 15.

[8] Ibid.

[9] John Kerry, The New War (Simon and Schuster: New York, 1997), 20.

[10] Richard Friman and Peter Andreas, The Illicit Global Economy and State Power (Rowman and Littlefield: New York, 1999), 91.

[11] Susan Snyder, "Combating Transnational Crime", Issues In Global Crime (US Department of State, Bureau of Diplomatic Security: Washington DC, 1998), 7.

[12] United Nations International Drug Control Programme, World Drug Report, (Oxford University Press, New York, 1997), 97.

[13] US Government, Office of National Drug Control Strategy, "Facts and Figures." 1999; available from <http://www.whitehousedrugpolicy. gov/drugfact/f_and_f/ contents. html>; Internet; accessed 6 December 2000.

[14] Sewall H. Menzel, Fire in the Andes: U.S. Foreign Policy and Cocaine Politics in Bolivia and Peru (New York: University Press of America, 1996), 117.

[15] Ibid., 117.

[16] Maria Teresa Hart, The U.S.-Peruvian Relationship on Drug Control. (Lima, Embassy of Peru, 1995), 13.

[17] Joseph F. Spillane, Cocaine: From Medical Marvel to Modern Menace in the United States, 1884-1920 (Baltimore: Johns Hopkins University Press, 1999), 21.

[18] Ibid., 27-28.

[19] Paul Gootenberg, Cocaine: Global Histories (London and New York: Routledge, 1999), 47.

[20] Richard, Friman and Peter, Andreas, The Illicit Global Economy and State Power (Littlefield: New York, 1999), 92.

[21] James A. Inciardi The War On Drugs II: The Continuing Epic of Heroin, Cocaine, Crack, Crime, AIDS, and Public Policy (London: University of Delaware Press, 1992), 6.

[22] Ibid.

[23] Ibid, 7.

[24] Paul Hager, "The Drug War and the Constitution." 1999; available from <http:// mir.drugtext.org/druglibrary/schaffer/DEBATE/dwarcon1.html >; Internet; accessed 3 February 2001.

[25] Shaffer Library of Drug Policy, "The Eighteenth Amendment and the national Prohibition Act." 1999; available from<http://www.druglibrary. org/schaffer/Library/studies/wick/wick1.html.> Internet; accessed 3 February 200

[26] Ibid., 40.

[27] U.S. Government, Department of Justice, "Drug Enforcement Agency." December 2000. Available from <http://www.usdoj.gov/dea/agency/csa.html>. Internet accessed 4 February 2001.

[28] Jose Varallanos, Historia de Huanuco (Bueno Aires: Imp. Lopez 1959), 588-90.

[29] Menzel, Sewall H. Fire in the Andes: U.S. Foreign Policy and Cocaine Politics in Bolivia and Peru (New York: University Press of America, 1996), 115.

[30] Hart, Maria Teresa. The U.S.-Peruvian Relationship on Drug Control. (Lima, Embassy of Peru, 1995), 36.

[31] Ibid.

[32] Ibid., 37.

[33] Ibid., 38.

[34] Ibid., 39.

[35] US Government, National Drug Control Strategy (Washington DC: The White House, 1999), 73-74.

[36] Ibid., 72.

[38] US Government, Office of National Drug Control Strategy, "Drug-Control Strategy: An Overview." 1999; available from <http://www.whitehousedrugpolicy.gov /policy/99ndcs/i-c.html>; Internet; accessed 12 October 2000.

[38] US Government, National Drug Control Strategy (Washington DC: The White House, 1999), 3.

[39] US Government, Office of National Drug Control Strategy, "Drug-Control Strategy: An Overview." 1999; available from <http://www.whitehousedrugpolicy.gov /drugfact/mission .html>; Internet; accessed 12 October 2000.

[40] U.S. Government, Department of Justice, "Drug Enforcement Agency." December 2000. Available from <http://www.usdoj.gov/dea/agency/mission.html>. Internet accessed 3 February 2001.

[41] Ibid.

[42] Ibid.

[43] Ibid.

[44] US Government, US Coast Guard Office of Law Enforcement, "Drug Interdiction," 2 October 2000: available from <http://www.uscg.mil/hq/g-o/g-opl/mle/drugs.htm.>. Internet; accessed 6 December 2000.

[45] Ibid.

[46] US Government, Joint Task Force Six, "Mission", 29 September 2000: available from <http://www-jtf6.bliss.army.mil/html/mission.html>; Internet; accessed 5 November 2000.

[47] US Government, Joint Task Force Six, "Counterdrug Support", 29 September 2000: available from <http://www-jtf6.bliss.army.mil/html/cdsupport.html>; Internet; accessed 5 November 2000.

[48] US Government, USCINCPAC, "United States Pacific Command Facts", 14 December 2000: available from <http://www.pacom.mil/about/pacom.htm>; Internet; accessed 5 November 2000.

[49] US Government, Joint Interagency Task Force East, "Mission Statement", 1 September 2000: available from <http://www.jiatfe.org/index.html>; Internet; accessed 5 November 2000.

[50] US Government, National Drug Control Strategy (Washington DC: The White House, 1999), 83.

[51] Commission on Narcotics Drugs PrepCom document E/CN.7/1998/PC/CRP.4, 3 March 1998. This summary of SCOPE is available at the web site of the Transnational

Institute: available from <http://www.worldcom.nl/tni/drugs>; Internet; accessed 5 November 2000.

[52] Ibid.

[53] Ibid.

[53] Financial Action Task Force, "FATF-VII Annual Report (1995-1996)", 28 June 1996, available from http://www.oecd.org/fatf/Ctry-orgpages/ctry-fr_en.htm; Internet; accessed 10 November 2000.

[54] Draft Action Plan on International Cooperation on Eradication of Illicit Drug Crops and on Alternative Development, Commission on Narcotics Drugs PrepCom document E/CN.7/1998/PC/7/Rev.1, 19 March 1998.

BIBLIOGRAPHY

Bagley, Bruce M, ed. Drug Trafficking Research in the Americas: An Annotated Bibligography. Miami, University of Miami, North-South Center, 1997.

Bertram, Eva, Blachman, Morris, Sharpe, Kenneth and Andreas, Peter. Drug War Politics: The Price of Denial. Berkeley: Univ. of California Press, 1996.

Clinton, William J. The National Drug Control Strategy, Washington, D.C.: The White House, October 1999.

Clinton, William J. The National Security Strategy for a New Century, Washington, D.C.: The White House, October 1999.

Collin, Barry C., "The Future of CyberTerrorism". Proceedings of 11th Annual International Symposium on Criminal Justice Issues. (July 1996). Available from <http://www.acsp.uic. edu/OICJ/CONFS/terror02.htm>. Internet. Accessed 2 October 2000.

Commission on Narcotics Drugs PrepCom document E/CN.7/1998/PC/CRP.4, 3 March 1998. This summary of SCOPE is available at the web site of the Transnational Institute. Available from <http://www.worldcom.nl/tni/drugs>. Internet; accessed 5 November 2000.

Draft Action Plan on International Cooperation on Eradication of Illicit Drug Crops and on Alternative Development, Commission on Narcotics Drugs PrepCom document E/CN.7/1998/PC/7/Rev.1, 19 March 1998.

Friman, Richard and Andreas, Peter, The Illicit Global Economy and State Power . Rowman and Littlefield: New York, 1999.

Financial Action Task Force, "FATF Annual Report (1995-1996). (28 June 1996). Available from <http://www.oecd.org/fatf/Ctry-orgpages/ctry-fr_en.htm>; Internet; accessed 10 November 2000.

General Accounting Office. Drug Control: Long-Standing Problems Hinder U.S. International Efforts. Washington, D.C.: U.S. General Accounting Office, September 1997.

General Accounting Office. Drug Control: An Overview of U.S. Counterdrug Intelligence Activities. Washington, D.C.: U.S. General Accounting Office, September 1998.

Gootenberg, Paul. Cocaine: Global Histories. London and New York: Routledge, 1999.

Hager, Paul, "The Drug War and the Constitution." 1999; available from <http:// mir.drugtext.org/druglibrary/schaffer/DEBATE/dwarcon1.html >; Internet; accessed 3 February 2003.

Hart, Maria Teresa. The U.S.-Peruvian Relationship on Drug Control. Embassy of Peru: Lima, 1995.

Holden-Rhodes, J. F. Sharing The Secrets. Westport, Conn; Preager, 1997.

Inciardi, James A. The War On Drugs II: The Continuing Epic of Heroin, Cocaine, Crack, Crime, AIDS, and Public Policy. London: University of Delaware Press, 1992.

Kerry, John. The New War. Simon and Schuster: New York, 1997.

Krauss, Clifford. "Pentagon to Help Peru Stop Drug Traffic on Jungle Rivers." New York Times International. (February 1997), 3:1.

Menzel, Sewall H. Fire in the Andes: U.S. Foreign Policy and Cocaine Politics in Bolivia and Peru. New York: University Press of America, 1996.

"Commission for the Fight Against Drug Consumption". National Operational Plan for Alternative Development, and for Prevention and Rehabilitation. Lima, Peru, (October 1997).

"Rethinking International Drug Control Policy: New Directions for U.S. Policy: Report of An Independent Task Force". Council on Foreign Relations (1997).

Riley, Kevin Jack. Snow Job?: The War Against International Cocaine Trafficking. New Brunswick: Transaction Publishers, 1996.

Schaffer Library of Drug Policy, "THE EIGHTEENTH AMENDMENT AND THE NATIONAL PROHIBITION ACT." 1999; available from<http://www.druglibrary. org/schaffer/Library/ studies/wick/wick1.html.> Internet; accessed 3 February 2001.

Snow, Donald M. and Brown, Eugene. Puzzle Palaces and Foggy Bottom. New York: St Martin's Press, 1997.

Snyder, Susan. "Combating Transnational Crime". Issues In Global Crime (November 1998).

Spillane, Joseph F. Cocaine: From Medical Marvel to Modern Menace in the United States, Baltimore: Johns Hopkins University Press, 1999.

United Nations International Drug Control Programme, World Drug Report. Oxford University Press, New York, 1997.

U.S. Department of Justice. Drugs, Crime, and the Justice System. Washington, D.C.: General Accounting Office, December 1992.

U.S. Department of State. Alternative Development and Counter-narcotics in Peru. U.S. Embassy: Lima, Peru, April 1997.

U.S. Department of State. Peruvian Alternative Development Project. Washington, D.C.: General Accounting Office, April 1998.

U.S. Department of State, International Narcotics Control Strategy Report, Washington, D.C.: General Accounting Office, September 1998.

U.S. Government, Department of Justice, "Drug Enforcement Agency." December 2000. Available from <http://www.usdoj.gov/dea/agency/csa.html>. Internet accessed 4 February 2001.

US Government, Joint Task Force Six, "Mission", 29 September 2000: available from <http://www-jtf6.bliss.army.mil/html/mission.html>; Internet; accessed 5 November 2000.

US Government, Joint Interagency Task Force East, "Mission Statement", 1 September 2000: available from <http://www.jiatfe.org/index.html>; Internet; accessed 5 November 2000.

US Government, National Drug Control Strategy. Washington DC: The White House, 1999.

U.S. Government, Office of National Drug Control Strategy, "Drug-Control Strategy: An Overview." December 2000. Available from <http://www.whitehousedrugpolicy.gov/index.html>. Internet; accessed 12 October 2000.

US Government, Office of National Drug Control Strategy, "Facts and Figures." 1999. Available from <http://www.whitehousedrugpolicy. gov/drugfact/f_and_f/ contents. html>. Internet; accessed 6 December 2000.

US Government, USCINCPAC, "United States Pacific Command Facts", 14 December 2000. Available from <http://www.pacom.mil/about/pacom.htm>. Internet; accessed 5 November 2000.

Varallanos, Jose. Historia de Huanuco. Bueno Aires: Imp. Lopez. 1959.