REPORT DOCUMENTATION PAGE

Form Approved
OPM No. 0704-0188

Public reporting burden for this collection of information is estimated to average 1 hour per response, including the time for reviewing instructions, searching existing data sources gathering and maintaining the data needed and reviewing the collection of information. Send comments regarding this burden estimate or any other aspect of this collection of information, including suggestions for reducing this burden, to Washington headquarters Services, Directorate for Information Operations and Reports, 1215 Jefferson Davis Highway, Suite 1204, Arlington, VA 22302-4302, and to the Office of Information and Regulatory Affairs, Office of Management and Budget, Washington, DC 20503.

1. AGENCY USE ONLY (Leave Blank)	2. REPORT DATE	3. REPORT TYPE AND DATES COVERED
	January 2001	Final

4. TITLE AND SUBTITLE	5. FUNDING NUMBERS
Military organizations and the Navy Facilitating Joint Communication (U)	N00014-96-D-0001 PE - 65154N PR - R0148
6. AUTHOR(S) E.D. McGrady	
7. PERFORMING ORGANIZATION NAME(S) AND ADDRESS(ES) Center for Naval Analyses 4825 Mark Center Drive Alexandria, Virginia 22311-1850	8. PERFORMING ORGANIZATION REPORT NUMBER CRM D0001732.A1
9. SPONSORING/MONITORING AGENCY NAME(S) AND ADDRESS(ES) Center for Naval Analyses 4825 Mark Center Drive Alexandria, Virginia 22311-1850	10. SPONSORING/MONITORING AGENCY REPORT NUMBER

11. SUPPLEMENTARY NOTES

12a. DISTRIBUTION AVAILABILITY STATEMENT	12b. DISTRIBUTION CODE
Cleared for public release. Distribution unlimited.	

13. ABSTRACT (Maximum 200 words)

The Composite Warfare Commander (CWC) concept provided the framework for command and control of naval forces during the Cold War. Since the end of the Cold War the navy has been experimenting with variants to the CWC concept. The purpose of this paper is to examine ways in which the Navy can "plug into" service and joint command and control organizations, without the Navy losing the fundamental character of the CWC concept. We compare different military and civilian organizations and examine different ways the services can organize to exchange information. We examine how services currently organize for combat operation and how civilian organizations, and civilian organizational theory, deal with the problem of interacting with different organizations. Finally, we examine how service organizations can work together while maintaining their own, distinct organizational structure.

14. SUBJECT TERMS	15. NUMBER OF PAGES
Air Force, Armed Forces, Army, Command and Control, Communications, Composite Warfare Commander (CWC), Department of Defense, Industries, Joint Military Activities, Marine Corps, Military Commanders, Military Organizations, Navy, Warfare Management	74
	16. PRICE CODE
	17. LIMITATION OF ABSTRACT SAR

18. SECURITY CLASSIFICATION OF REPORT	19. SECURITY CLASSIFICATION OF THIS PAGE	20. SECURITY CLASSIFICATION OF ABSTRACT
Unclassified	Unclassified	Unclassified

NSN 7540-01-280-5500

Standard Form 298 (Rev. 2-89)
Prescribed by ANSI Std. 239-18
299-01

20010226 010

CRM D0001732.A1/Final
January 2001

Military Organizations and the Navy

Facilitating Joint Communication

E.D. McGrady

Center for Naval Analyses
4825 Mark Center Drive • Alexandria, Virginia 22311-1850

Approved for distribution: January 2001

Ms. Christine H. Fox
Director, Operational Policy Team
Operations Evaluation Group

This document represents the best opinion of CNA at the time of issue.
It does not necessarily represent the opinion of the Department of the Navy.

Cleared for public release.
For copies of this document call: CNA Document Control and Distribution Section at 703-824-2943.

Copyright © 2001 The CNA Corporation

Contents

Summary 1
Service organizations and frameworks 2
Civilian organizations 2
Other services' solutions to inter-service and joint coordination 3
Adapting other services' solutions to the Navy 4

Introduction 5

How do the services organize for combat? 9
Army 10
Air Force 14
Organization 14
Framework 15
Marine Corps 16
Organization 16
Framework 17
Navy 18

Civilian organizations 21
Boundary spanning in organizations 21
Boundary spanning roles 25
Implications 27

Service integration 29
Relating the frameworks 29
Differences 29
Methods for adapting 30
How can different kinds of organizations work together? 31
Facilitator organizations 31

Adapting facilitator organizations to naval operations 34
Maritime Coordination Detachments 37

Appendix A: Military organizational structures 41
Army 41
Organization 41
Corps 41
Division 44
Brigade 44
Battalion 45
Company 46
Joint Forces Air Component Commander (JFACC) 46
Marine Corps 52
MEF organization 52
Marine air command and control 55
Navy 58
CWC 58
New concepts 60

Appendix B: Unit symbology 63

References 65

List of figures 69

Summary

The Composite Warfare Commander (CWC) concept provided the framework for command and control of naval forces during the Cold War. The CWC concept divided missions up according to the environment they occur in (air, surface, subsurface, etc.) with authority for defensive and offensive operations delegated to warfare commanders.

CWC was designed to provide a quick reacting and survivable command structure for forces at sea.

Since the end of the Cold War the Navy has been experimenting with variants to the CWC concept. This experimentation is designed to improve the perceived ability of CWC to work with joint and other services' command organizations. Taken to the extreme, this drive for compatibility could cause the Navy to mirror other services' command structures, such as the structure used by the Joint Force Air Component Commander (JFACC), in order to "fit in" with the flow of information in an operation.

By changing the Navy's command and control structure to fit into the joint world the Navy risks losing the knowledge gained by trying to defend ships against a fast and difficult threat.

There may be a better way. If we assume that battle groups organized their command structure around CWC for a reason, then instead of asking how the Navy can mirror other services, we can ask how the Navy, and other services as well, can adapt their own unique organizational requirements to the communications needs of the joint environment.

The purpose of this paper is to examine other ways in which the Navy could "plug into" service and joint command and control organizations, without the Navy losing the fundamental character of the CWC concept. We do this by looking carefully at the way other services

organize for air support of ground combat operations. We look there because it is in the interface between air and ground operations that the most work has been done in adapting joint and service organizations to work with each other.

As we develop alternative ways for CWC to work with joint and interservice command and control organizations we will need to answer three questions along the way:

- How do the services currently organize for combat operations?
- How do civilian organizations, and civilian organization theory, deal with the problem of interacting with different organizations?
- How can service organizations work together while maintaining their own, distinct organizational structures?

Service organizations and frameworks

The services concerned with ground combat, the Army and Marine Corps ground component,[1] have very different organizational structures compared to the Air Force or Navy. The Army and Marine Corps are organized in a tree structure, with each node having an organization similar to the nodes above and below it. This allows them to control many small units, but increases the need for planning and slows the pace of operations. The Air Force, Marine Corps air component, and the Navy are organized around the need to control small numbers of units and coordinate rapidly changing events.

Civilian organizations

We looked at the literature on organizational theory and found that civilian organizations have some of the same problems military organizations do. They have to gather information from outside the organization, and work with organizations and entities they do not

1. For a full discussion of the Marine Corps expeditionary organization, see the main text.

directly control. The parts of a civilian organization that interact with the outside world are called "boundary spanning" elements.

Civilian organizations deal with the boundary spanning problem in ways that are different from the military. They can acquire other companies, or place their employees on other organizations' boards of directors. They can also form associations and seek political and cultural solutions to problems they have in common.

These kinds of solutions are more difficult for the military. Instead, military organizations have developed formal structures for mediating their interaction with the environment. We call these military organizations that span boundaries "facilitator organizations."

Other services' solutions to inter-service and joint coordination

The Air Force, Army, and Marine Corps have developed organizational components whose sole function is the coordination of air and surface forces. We refer to these organizations as "facilitator" or translator organizations. Their function is to translate the structure and functions of one organizational structure, for example the Army, into that of another service, such as the Air Force.

Facilitator organizations are unique in that they:

- Are formal components of the service organizational structure. Often these facilitator organizations are standing forces, not ad-hoc or temporary.
- Are structured in a way that is similar to the organization they are attempting to translate. If the organization they must interact with is functional, they are functional.
- Have ties back to their parent service's organization. While a facilitator organization's internal structure mimics that of the other service, it also maintains ties back to its logical counterparts in the originating service.

- Provide real-time exchange of information. Facilitator organizations may have a liaison role, but their primary purpose is to coordinate service activities. This role requires dedicated staffs and communications equipment. It is also independent of whether either of the organizations that must coordinate are joint (such as a JFACC) or single service (e.g., the Air Force). The presence of joint staff officers is not sufficient to ensure coordination between services at all the levels in a command structure where coordination must occur.

Adapting other services' solutions to the Navy

Facilitator organizations provide an alternative model for how service organizations, in this particular case Navy organizations, can work together while retaining their identity. This is not the only way. Services can change and adapt their organizations to meet the requirements of working in the joint world. Or they can mix and match, sometimes changing their organization, and other times using facilitator organizations.

The concepts discussed here provide one alternative to simply changing service organizations like the Navy's to the joint model. Exercises, games, and real world operations will provide the experience and data to determine the organizational concepts that meet the Navy's current needs, and the ones that need to change.

Introduction

In this paper we compare different military and civilian organizations and examine different ways the services can organize to exchange information. Our goal is to better understand how forces are organized for air, land, and sea combat, and how the unique organizations that have grown up in each environment can work together in a joint operation. We do this by examining service and joint organizations, and how military forces and civilian organizations currently reassemble to work across organizational boundaries.

We organize our discussion by service, not joint, organizations because below the Joint Task Force commander level most operations are going to be conducted using organizations and systems designed around service models. While the organizations may be joint organizations, such as the Joint Forces Air Component Commander (JFACC), they are fundamentally based on service (in this case Air Force) doctrine and concepts. The Army did not design JFACC, nor did the Navy; it was a concept that emerged out of Army and Air Force operational thinking and doctrine [2–3]. To realistically look at what organizations are needed in the different environment, we must acknowledge that even joint command structures are adapted to the type of environment their forces operate in.

We also recognize that in most cases the warfighting, logistics, and administrative command structures are hopelessly intertwined. However, by "military organization" or "organizational structure" in this paper we mean those elements of command associated with *real-time* control and planning of *combat* operations.

We emphasize warfighting command structures because that is the primary mission of the CWC commanders. We also focus on the Navy battle group: this paper does not discuss amphibious operations. For analysis of amphibious operations, see [4].

Our attention is also focused in the littoral, since that is where joint operations are likely to occur and where Navy battle groups will be present.

Our approach was to define a set of *frameworks* for military and civilian organizational structures. The frameworks are abstract representations of the underlying structure of the organizations. Distilling the often complex military command structures down into their essential elements makes it easier to compare them.

These frameworks, when combined with insights gained from the study of organizations (Organization Theory), illustrate the differences between the Navy and other services. By using concepts developed from organization theory, we open up the possibility for developing new ways of organizing for joint operations.

Figure 1 summarizes our approach. The frameworks we developed from looking at how the various services organize filter through the lens of theoretical organization theory. We also used organization theory to develop new concepts for how service organizations can work together.

Figure 1. Analyzing organizations

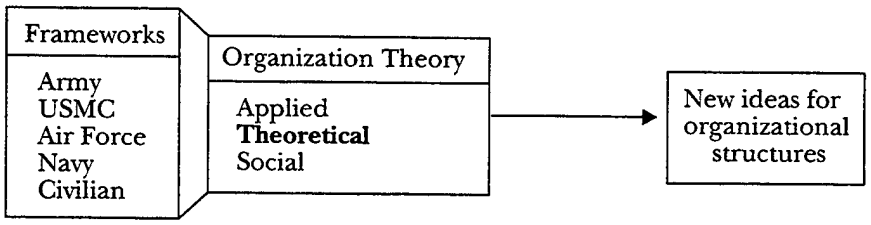

In addition, we used organization theory to examine how different organizations are structured to accomplish their objectives. As such, we concentrated on the theory of how organizations are put together instead of their human or practical aspects.

We begin this paper by describing how the military services structure themselves for warfighting. We abstract these organizations into more general frameworks. These frameworks capture the essential elements of the organizations. By comparing these frameworks with each other and to other organizations we develop a synthesis that suggests new organizational structures that allow the services to interact without having to give up their underlying command structures.

How do the services organize for combat?

This is a very broad question. What we are interested in is accumulating enough information about how services are organized to allow us to compare the essential features of each service. We compare the essential features of service organizations by abstracting the service organizations into general frameworks that capture the essence of the command organizations.

The military services have a wide range of missions. They have developed different ways to organize their forces to match these missions. In order to limit ourselves to a manageable number of missions, we concentrated on two types of service organizations:

- **Independent**. The way individual services organize for combat when they do not expect much interaction with another service (ground combat for the Army, amphibious operations for the USMC, overwater combat for the Navy, strategic bombing for the USAF).
- **Interactive**. How military forces organize when they must cooperate to accomplish joint or multi-service missions. The most common types of missions that require real-time joint control and coordination are air missions (other than strategic bombardment) and over-water (and sometimes over-land (e.g., gunfire support) naval missions. Examples include close air support (CAS), flight operations in airspace controlled by joint components, air superiority operations (when naval aircraft are involved), air interdiction, and air defense. Other examples where services must cooperate, but that are not dealt with in this paper, include amphibious landings, ship transport, and airborne assaults.

Independent organizations will reflect the unique qualities and missions of the individual services. They may also point to underlying

differences between services that may result in incompatibilities of command structures once the services engage in joint operations.

Interactive organizations may represent ways services have, successfully or unsuccessfully, attempted to overcome their differences and work together.

Army

The Army organizes for command and control of combat operations in a very linear, progressive way. Armies control corps, while corps control divisions, divisions battalions, and so on.

The Army has command elements that are responsible for similar functions at all levels of the hierarchy. This is discussed in detail in appendix A. For example, it would normally be expected that a division would be responsible for offensive, defensive, and combat services support (logistics) operations for itself and its subordinate commands. Likewise, a division would be responsible for fires, maneuver, intelligence, and synchronization. A brigade would have very similar responsibilities, and so would a battalion or company.

Not only are the responsibilities of the Army's primary command entities similar, but the entities are nested one within the other. Brigades are made up of battalions which are, in turn, made up of companies, which are made up of platoons, which are made up of squads, which are made up of individual soldiers. The point is that each component of the Army's fighting organization is made up of a number of subordinate components, all of which in turn are made up of smaller organizations with responsibilities similar to those of the parent organization. This resembles a Russian box with each organization opening up to reveal a smaller, similar organization contained inside of it.

There are differences between the various levels of command in the Army. Division and corps commanders must synchronize between close, deep, and rear activities [5]. The concept of close, deep, and rear area operations will change dramatically as you go down the organization. Corps- and division-level organizations have greater

numbers of combat service support units and thus greater responsibility for sustainment of operations. Smaller units may be more specialized, such as engineering or aviation units, while larger units, because of their size, have a wider range of internal functions and are less specialized.

While these differences may create important differences between units smaller than the size of a division, the overall structure of the combat forces remains quite similar. The differences turn out to be marginal compared to the central purpose and organization of the units.

This suggests that, abstractly, the Army is organized in a way that is "self similar." Smaller units have responsibilities, and indeed are structured, in ways that are very similar to units both above and below them. A company will have many of the same missions, roles, and internal organizations as a division or corps. The smaller units will have smaller subordinate units, spans of control, and time horizons, but they will be similar in concept.

This concept of self similarity in the Army's organizational structure can be illustrated by constructing a figure known as a Sierpenski Gasket [6]. First, we represent each entity, whether a corps, division, battalion, company, etc., as a triangle. At each vertex of the triangle we place a mission or function that is common to each level of the organization. One example might be offensive, defensive, and combat support functions. Figure 2 shows a corps represented this way. In this and all subsequent figures the triangle represents a unit of the organization, and each vertex represents the common three missions (defense, offense, and combat support).

Suppose that this corps has three divisions. For convenience all units will be assumed to have three subordinate units. Obviously this is not the case in reality. The figure could be constructed with a realistic number of units. It would just be more complicated.

Each division also has the functions of offense, defense, and combat support. Since the divisions are subordinate to the corps, we place the divisions within the triangle that represents the corps as shown in figure 3. In the figure the corps organization is still there; it makes up

the triangle surrounding the three divisions. (The dark triangle in the center in this and subsequent figures is "empty.")

Figure 2. Corps-level framework.

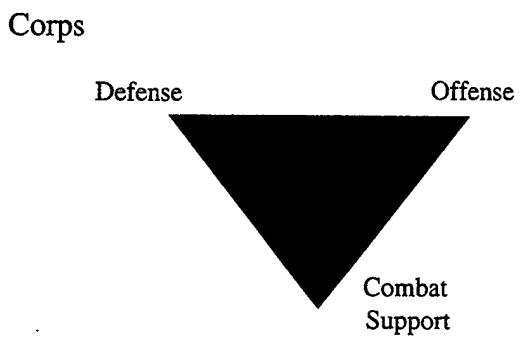

Figure 3. Division-level framework

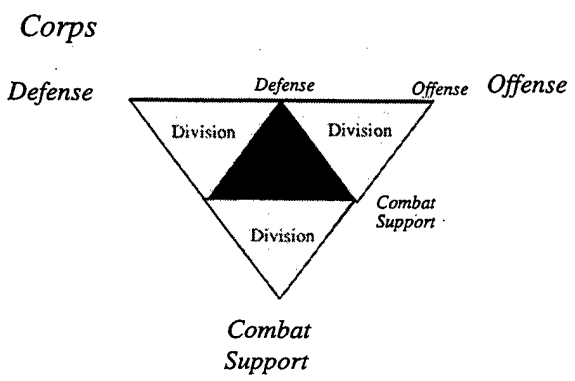

Following this pattern we could also show the combat brigades that make up the divisions. Again, assuming that each division is made up of three brigades, we can show the relationships by placing the brigades within the divisions' triangles (figure 4). The brigades also have offensive, defensive, and combat support functions similar to those of the division.

Figure 4. Brigade-level framework

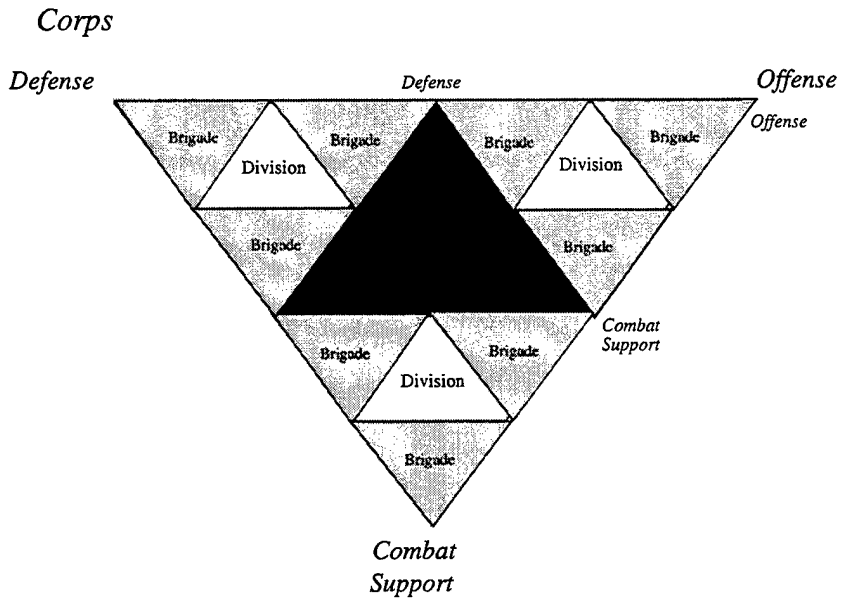

Continuing this process down to the company level gives an abstract representation of the command and organizational structure for the Army. Figure 5 shows the result. The principal features of the Army framework are as follows:

- There are multiple levels of command. Each level of command in the organization has smaller units that report to it. These smaller units are simiculum, or small copies, of the larger unit.
- All levels of command in the organization have similar organizational structures, missions, and functions. The similarities may be abstract, such as offensive, defensive, or combat service support functions, or concrete such as fire and movement.
- Within each command level there are a number of functions that are unique to that command. Maintenance, for example, varies from the corps to battalion level. However, there is a core of functions, centered around combat operations, that all levels share. The similarities tend to be more fundamental to understanding the command structure than the differences between units.

Figure 5. Battalion-/company-level framework

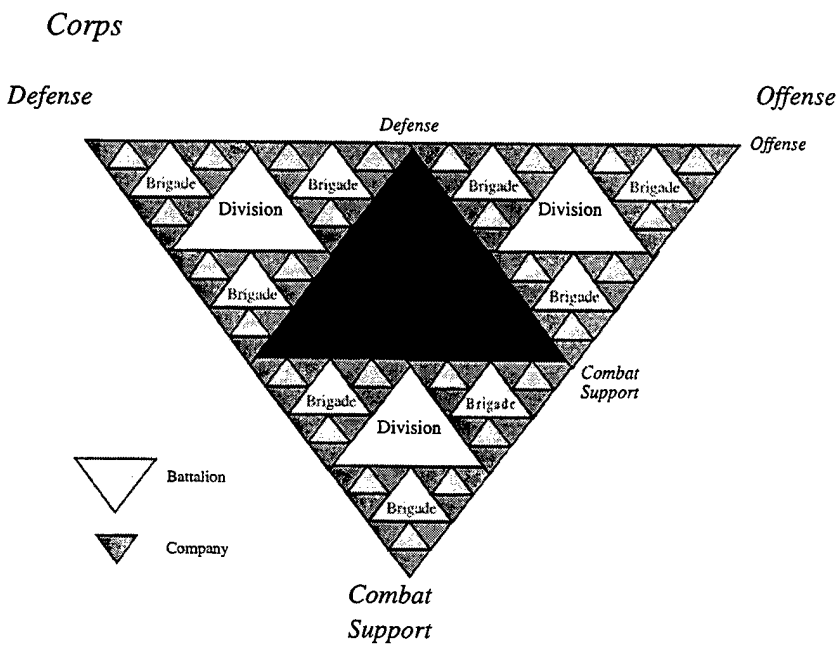

Air Force

Organization

For many missions other than strategic bombing, the Air Force can expect to work with other services in accomplishing its missions. Thus, much of the Air Force's organization for real-time control of combat operations falls into the category of what we would call an interactive organization [7].

We will not discuss the independent organization of the Air Force in the same way we describe those of the Army, Navy, and Marine Corps. The internal structure of the Air Force is very similar to that of the Army, with air forces, wings, and squadrons functioning in similar ways to the Army's corps, divisions, and battalions. However, while the Army uses its internal organizational structure both for real-time control and planning and for garrison operations, the Air Force relies on

other organizations, such as the JFACC, to plan and control real-time operations.

We concentrate on the processes involved in real-time control of air operations, and use these to show where Air Force operational control interacts with other services' (mainly Army) organizations.

In a joint command, air operations are controlled by a JFACC. The JFACC reports to the Joint Forces Commander (JFC) and plans, coordinates, allocates, and tasks air sorties [8]. The JFACC is appointed by the JFC and is usually the air commander with the preponderance of air forces in the theater [9]. The JFC also designates an Airspace Control Authority (ACA) and an Area Air Defense Commander (AADC). Normally, the JFACC is also designated as the ACA and AADC [9]. Here, we concentrate on the organization the JFACC uses to implement the JFC's intentions.

We also take the same approach to describing the air command and control process as we did with the Army's command organization and include it in appendix A. In appendix A we show the relationship between the air component and the land forces component in a joint force [10].

Framework

The Air Force's command structure for real-time control of forces (essentially the JFACC) does not resemble the Army's command structures for land warfare. It is a linear, functionally oriented organization. A caricatured framework for the Air Force Tactical Air Command Center (TACS) structure is shown in figure 6. It is organized according to the function the group performs: current operations, current plans, intelligence, fusion, reconnaissance, air lift, and air defense. While all functions have real-time components, the principal component of the Joint Air Operations Center (JAOC) for real-time airspace control is the Control and Reporting Center (CRC).

The Air Operations Center (AOC) is a very interdependent organization. For internal control and coordination of aircraft and aircrew functions the Air Force has its wing and squadron organization. But when it must coordinate with other services is uses the JAOC

organization. The JAOC coordinates support for ground forces by interacting with the Battlefield Coordination Element (BCE).

Figure 6. Air Force TACC organizational framework

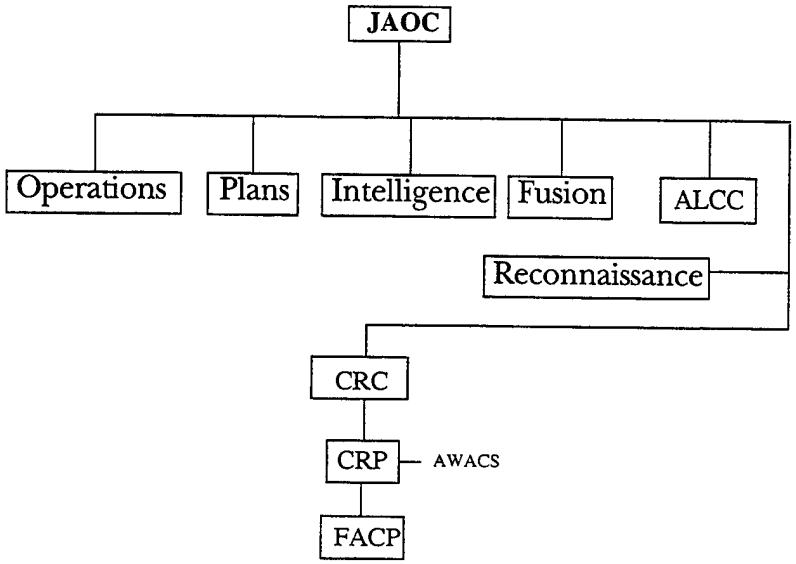

ALCC-Airlift Control Center
CRC-Control and Reporting Center
CRP-Control Reporting Post
FACP-Forward Air Control Party
AWACS-Airborne Warming and Control System

Marine Corps

Organization

The Marine Corps is organized around the concept of a self sufficient, amphibious landing force. This makes it difficult to abstract a framework unique to the Marine Corps, this has both ground forces as well as aviation forces. Command relationships become even more complex during an amphibious operation where ground, aviation, and maritime forces all must work together.

The Marine Corps has different organizational relationships and structures for each of its tasks: ground, air, and amphibious assault. In appendix A we describe the command and control organizations for the Marine ground and air elements. There we also discuss coordination between the ground and air elements. We will not discuss amphibious operations as these have a unique command and control structure.

Framework

The Marine Corps is a service that works in all three operating environments: air, land, and sea. This means that the Marine Corps has organizational elements that resemble those of each of the services. Its divisions and wings resemble the Army's division structure while its Marine Corps Air Command and Control System (MACCS) command structure resembles that of the Air Force's JFACC. And during amphibious operations its command organizations must tie in with the Navy's Composite Warfare Commander concept.

The Marine Corps differs, however, from the other services in one important way: the Marine Air-Ground Task Force (MAGTF) brings together all of the various combat and support functions into one integrated whole. The integrated training that the MAGTF undergoes means that the air and ground components are far more closely aligned and integrated than they are in the case of the Army and Air Force.

Below the level of the MAGTF, the way the Marine Corps divisions and wings are organized closely resembles the Army's Corps/Division structures. They are organized in a self similar structure like the one shown in appendix A (figure 11). Each organizational level has levels above and below it that perform similar tasks and are organized along similar lines. This organization is designed to decrease the overall span of control for commanders in an organization with many, similar individual parts.

The Marine Corps has also developed a command structure for command of air operations that is organized in ways similar to the JFACC. The Tactical Air Operations Center (TAOC) is organized functionally for air defense and airspace control, air traffic control, and air

support for ground operations. As was the case for the Air Force and Navy, a functional structure provides for effective control of a small number of multimission, multirole combat elements.

In many ways the Marine Corps is a composite of all three service command and control structures. Which control structure is used depends on the tactical and organizational context. The unique aspect to Marine Corps organization is that it brings all of these different unit organizations together into one, integrated force (the MAGTF).

Navy

Command and control for Navy forces at the battle group level are in a state of experimentation and change. The Composite Warfare Commander, the model used during the Cold War, is evolving and adapting to work in a joint operational environment. We try and reflect this state of flux in this paper by describing the CWC concept, and then discussing recent modifications to that concept.

The original CWC concept provides insight into how the Navy might organize if it were to operate independently as a maritime force. The recent modifications to CWC demonstrate how the Navy is working to adapt its overwater command and control requirements to the joint arena.

The Navy CWC command structure, whether the traditional CWC structure or newer versions such as the one used during Desert Thunder by the *Nimitz* battle group (shown in appendix A, figure 23), is organized functionally according to the type of warfare the commanders will conduct. Figure 7 shows an abstract framework for the new CWC organization. The Navy structure is organized according to the type of environment the warfare will occur in (the original CWC structure organized by function): sea, air, land (strike), or information (command and control). The warfare commanders report directly to the CWC, who retains tactical control of the forces.

Figure 7. CWC organizational framework

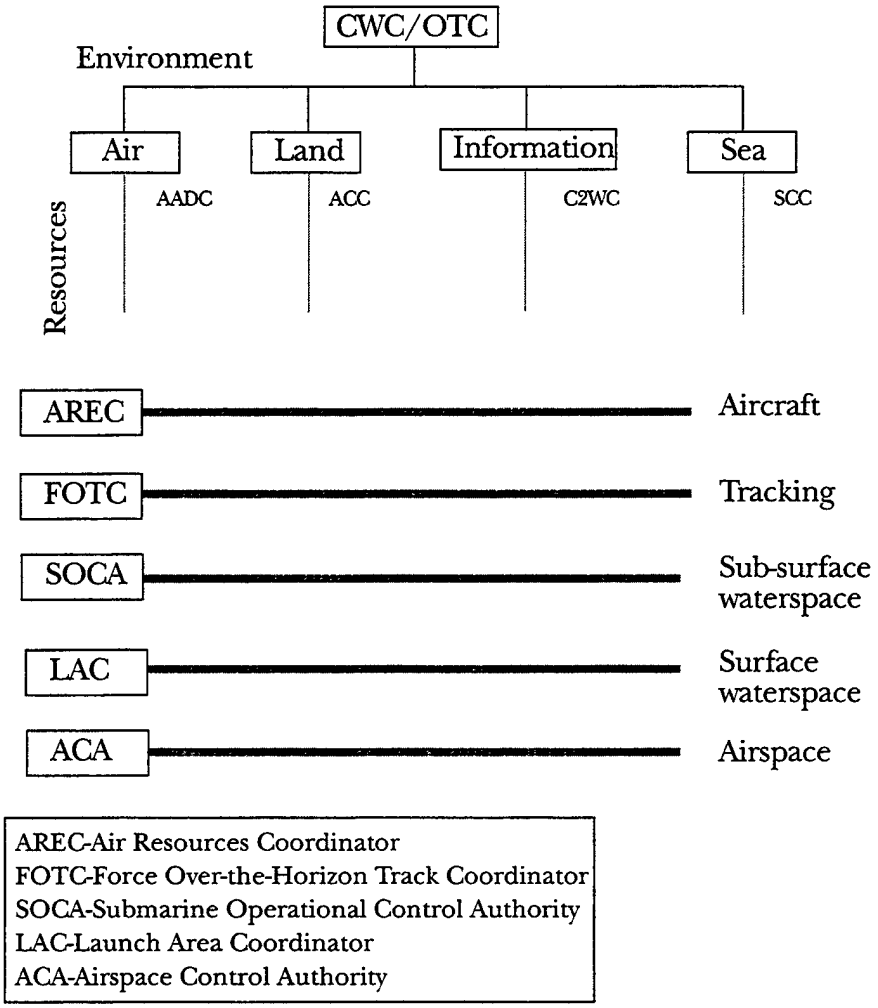

In addition to warfare commanders, the Navy structure separates the asset coordination function from the control function. Assets need to be coordinated, particularly when conflicts in stationing, tracking, or needs arise between warfare areas. Assets are allocated either directly by the CWC (as is usually the case with surface ships) or through asset coordinators appointed by the CWC (as is usually the case with air assets). An outside command, Submarine Operating Authority (SUBOPAUTH), coordinates submarine forces with the warfare commanders, primarily the Anti-Submarine Warfare Commander (ASWC).

Other coordinators work with intangible, but still limited, resources. For example, track coordinators work to make sure common tracks are coordinated between reporting units. Water and air space managers make sure that ship and aircraft operations are deconflicted between units.

Each warfare commander requests assets from the area coordinator. In the cases where there are conflicts, the CWC decides the allocation of assets.

In the CWC structure, individual ships and aircraft are controlled directly by the warfare commanders once they are allocated to them. The warfare commanders may be given broad authority by the CWC to deviate from normal plans if they believe circumstances require it. For the Navy, the warfare commanders combine the direct command authority of a TACC or JFACC/ACC with the control functions of a CRC.

Civilian organizations

We are interested in understanding how different organizations adapt to work together while retaining their own unique identities. One place to look is the civilian world, in particular the business world.

Businesses occasionally need to coordinate their efforts with other organizations. They interact with the overall environment, or context, within which they operate. The environment includes other organizations, businesses such as suppliers, the organization's customers, or the government. The environment also includes other things that affect the business, such as prices, weather, technology, and infrastructure.

Military organizations are not like businesses. If we were *comparing* the military's organization, goals, or way of making decisions to business, our comparison would not make much sense. What we are doing is looking for models of how different organizations relate to each other. Some of these models or concepts may allow us to develop a better understanding of the underlying principles behind how military organizations relate to each other and their environment.

Boundary spanning in organizations

To define an organization, one must draw a boundary between what is inside and outside the organization. The organization is inside the boundary. The rest of the world, the "environment," is outside the boundary. The environment includes information that the organization collects and processes as well as the customers, allies, and competitors that the organization interacts with. Most organizations require something from the environment in order to accomplish their goals. At minimum, they will need to gather information and interact with the environment.

Organization theory attempts to characterize how organizations interact with their environments. The process that governs how information or other external influences cross into and out of organizations is known as "boundary spanning" [11]. Other processes also operate to mitigate the effect that changes in an organization's environment have on the internal functioning of the organization. These processes are known as "buffering" [12]. The mechanisms and structures that facilitate this interaction are known as "interface networks" [13] or "linkages" [14].

Information processing

Most organizations need information from the external environment in order to set and accomplish their goals.

Personnel at the boundaries of an organization are in positions that expose them to a lot of external information. Boundary personnel might be sales representatives, purchasing agents, public relations personnel, lobbyists, or representatives to boards or regulatory agencies [11, 14]. Wherever they are located, boundary spanning personnel have the expertise to sift through external information, determine who within the organization needs to know it, and summarize it in a way that the organization can understand and use.

The information brought in from outside the organization can have both immediate as well as long term effects on the organization.

Some of the information developed by boundary personnel may require immediate action. An example might be sales personnel who notice an increase in customer dissatisfaction with a product. The sales department might contact engineering and product development and form teams to work on the problems associated with a product.

Boundary personnel will also be the first parts of an organization exposed to change in the environment. Some changes might be subtle and occur over a long period of time. These changes might, however, have a profound impact on the industry or the organization's environment. Because they are constantly exposed to the outside environment, boundary spanning personnel are the first people

within an organization to identify change. They are often responsible for bringing innovative ideas and structural change into an organization [11].

Intelligence and weather units in military commands have roles very similar to those of boundary personnel in business. Military units, for example, need information about:

- Threat forces—their composition, location, intentions, and capabilities.
- Friendly forces—their locations, plans, and readiness.
- The environment, weather, terrain, etc.
- A wide range of other things they may interact with.

Intelligence and weather units as well as other organizations in military units have formal responsibilities for collecting, processing, and disseminating this information. Threat information, for example, is collected and processed by intelligence functions. Weather information is collected and processed by weather functions.

These functions are responsible for sorting through a large amount of information, determining which pieces of information are important, and reporting them to those who need to know. The units responsible for the functions have developed expertise in the areas they report on and thus are able to synthesize and interpret the information as well as collate and sort it. These functions also have dedicated, standing, resources they can call on to do their job.

Interacting with the environment

Organizations can adapt to the environment in three ways [11]:

- Change their internal structure to bring it in line with the requirements of the environment.
- Manipulate the environment according to the organizations' needs.

- Use boundary personnel in their traditional roles of information gathering and interaction with the environment to reach some compromise between internal and external change.

Usually some combination of these three alternatives is used. Typical boundary roles in business would include [12]:

- Sales and purchasing
- Contracts and joint ventures
- Interlocking boards of directors/ownership
- Political activism and alliance building
- Public relations and organizational image
- Employment and recruiting.

The purpose of these organizations is to either:

- Link the organization with other organizations or important parts of its environment.
- Screen the organization from an environment or organization it does not want to interact with.

The boundary spanning problems faced by business that most closely resemble the inter-service coordination problem we are interested in are political/regulatory and alliance building. Political problems require mediation and coordination between business and government organizations. Alliance building requires coordination between businesses, within the context of antitrust legislation.

Boundary spanning personnel involved with politics or alliance building represent the organization and mediate between the organization and other organizations. Mediators negotiate with external entities either directly or indirectly. Their goal is to improve the organization's position in the environment. Corporate lawyers are the primary boundary personnel that mediate with the government and other companies.

Organizations also coordinate their political and social agendas through informal networks. Companies coordinate their interests

because their decisionmakers share memberships in social clubs, have common educational backgrounds, participate in policy groups, and have familial associations [15].

Just as companies have competitors, allies (suppliers), and customers, military services relate their organizations to:

- The threat or mission
- Civilian political entities
- Other services and countries they may be required to work with.

Services are faced with options similar to those of private businesses: they may adapt their organization to the requirements of the environment, they can change the environment, or they can gather information and attempt to mediate.

Services have a variety of organizations that perform these functions directly or indirectly. In addition to intelligence organizations, service plans, policy, and strategy departments can also function as a conduit for ideas into and out of the service. Likewise, the services deploy a range of liaison and augmentation officers to a variety of other organizations from the Congress to embassies.

Boundary spanning roles

When two organizations interact, two things must occur:

- There must be a way for the interaction to occur (how).
- The interaction will have some content (what).

There are two ways that individuals in boundary spanning roles can interact: formally or informally [16].

Formal relationships occur between individuals who are acting within the context of their roles within the organization. Formal relationships between organizations imply:

- Knowledge and acceptance of the contacts from all levels of management. Possibly involving agreement, in writing, of cooperation between the groups.
- Resources dedicated to the relationship by either one or both organizations.
- Coordination on matters that significantly affect the organization's goals or mission.

Informal relationships develop between individuals outside of their formal relationships with the organization. Informal relationships imply:

- The possibility that some elements of management do not know about the relationship.
- The individuals are operating outside of their formal career track and rewards system.
- Because they are not sanctioned by the organization, these contacts do not have resources or influence sufficient to make immediate, long-term changes to the organization's missions or goals.

The position of boundary spanning personnel determines the type of relationship that occurs. What is exchanged in the relationship depends both on the position of the personnel within the organization and the overall goals of the organizations involved.

There are several ways in which organizational interactions can develop [16]:

- **Barter.** Each organization is seeking its individual goals. When an exchange, of information or resources, benefits both organizations, it will occur. Of course the corollary is that when an exchange would benefit only one organization it will probably not occur, even if it would be beneficial to whatever "system" the organizations were embedded in.

- **Exchange networks**. In this model, resources, or clients, are shared between organizational components when it is logical to do so. Patients, for example, being treated for tuberculosis might flow from screening organizations to special clinics to sanitaria. These shifts rely on consensus amongst the experts and management as to what determines a rational flow network.

- **System integration**. In some systems, health care for example, it is important for all of the participating organizations to work together. Outside factors, such as altruism or regulatory agencies, can attempt to integrate various organizations into a coherent system. This motivation requires that the outside forces attempting to integrate the organizations have sufficient formal and informal authority to impose their will. Often integration is constrained by standards, or other measures, that differ between organizations.

Implications

Business, civilian, and military organizations share the problem of coordinating their internal activities with the external environment. Business and civilian organizations develop a variety of organizational components to mediate between the internal organization and the environment. These organizational elements:

- Link the organization to the environment
- Buffer the internal organization from the environment.

If the organization is to develop links with or adapt to the external environment, it can do so through:

- Internal change
- Mediation
- External change.

Boundary personnel can perform all three tasks. They can bring in new ideas from the environment, changing the organization internally. They can also mediate, or buffer, the organization from the

environment, gathering information and developing compromises. Or they can attempt to influence or change the external environment by expending resources (buy outs) or inserting their organization's agenda and beliefs into the external world.

Civilian organizations also span boundaries with two different types of structures: formal and informal. Formal organizations are similar to the Battlefield Coordination Element/Forward Air Controller (BCE/FAC) organizations described for the Air Force and Army. They are well-defined parts of the enterprise that are responsible for working with the environment. Likewise, services span boundaries with informal organizations, such as liaison officers and augmentees. These personnel are designed to provide service expertise and command access.

Looking at how civilian organizations span boundaries provides some fundamental principles that can also be applied to the military. When adapting to the joint or inter-service environment, military organizations can:

- Change their command structures
- Mediate with the environment
- Advance their doctrine and concepts as the right solution for joint doctrine.

The services can do this through formal or informal organizations, ranging from the BCE/FAC example to liaison and informal contacts between services.

In this paper, and in particular in the next section, we focus on the role organizations like the BCE/FAC can play in mediating between the services and their organizational environment. In general, the Navy has many other options, including mediation, to choose from. In the next section, we discuss organizations designed to mediate between the Navy's command and control structure and joint command structures. It is one option among many that include modifying part of all of the Navy's command organization to advancing Navy command and control concepts as the right solution for the joint arena.

Service integration

Relating the frameworks

We have seen there are a lot of different ways to look at how organizations are structured. How can we apply this information to increase our understanding of the relationships between the services?

Two questions must be answered:

- How do the services' organizational structures differ and how do those differences affect how they operate together?
- Have services developed methods for adapting to the differences in their organizations in areas, such as air defense, where they must work together?

Differences

There is a fundamental split between those services that operate on land—the Army and Marine Corps—and those services that operate either on the ocean or in the air. Air and naval forces must operate in an environment that cannot be traversed without the aid of technology. This reliance on technology, along with other factors, has led to fewer individual units and thus fewer units for commanders to control (smaller spans of control). Mobility also differs in the air and on the water from mobility ashore. There is no terrain, and many fewer restrictions on maneuver. It's also harder to find cover in the air or on the ocean (submarines are an exception).

The nature of the environment and the numbers of units that must be controlled are reflected in the command structures of the various services. For the Air Force and the Navy, it has meant streamlined functional or matrix organizations that are very different from linear, bureaucratic organizations.

The essential differences in the underlying command frameworks between the air and sea services and the ground forces can lead to serious mis-matches when the command structures attempt to work together in real-time support of each other's operations.

These differences can be summarized as follows:

- The organizational structures of the Army and Marine Corps are designed to provide both administrative and operational command to a large number of "nested" units.
- The Navy and Air Force real-time command structures are designed to respond to events that occur rapidly and require instantaneous coordination of a few, highly mobile elements.
- These fundamental principles have led to radically divergent operational command structures between ground forces and air and naval forces.
- Air Force and naval operational command structures are organized functionally, with the Navy emphasizing real-time battle management and the Air Force emphasizing planning.
- The Air Force, the Army, and the Marine Corp's MAGTF have adopted structures that allow them to get around the differences between air and ground command structures (for example the BCE/FAC structure).

Methods for adapting

The Air Force JFACC and Army BCE units coordinate air operations at the operational and tactical levels. The Marine Corps has a very similar structure in the MAGTF. Air operations and close air support (CAS) require that the forces involved coordinate their actions. naval gunfire support, airborne assault, and amphibious operations are other examples where the nature of the mission requires inter-service cooperation. In each of these cases institutions, and doctrine, have been developed to do the coordination.

The examples of inter-service coordination we have discussed here indicate:

- Coordination is most likely to occur when there is a compelling operational reason for cooperation to occur. In the cases examined here the mission (CAS) would not be possible without coordination.
- Successful coordination requires a comprehensive, well staffed command element that is integrated into every level of the individual service command structures. The Army BCE and the Marine Corps FACs are present at every level of the chain of command or at the level of every tactical unit.
- The coordinating organizations' (BCE, DASC) sole mission is to support inter-service coordination. These organizations are neither ad-hoc nor detached from other entities. They stand by themselves in having a coordinating and supporting mission.
- The organizations are adapted to the functional areas they are responsible for coordinating. For example, a BCE has elements for plans, airspace coordination, ground support coordination, and intelligence coordination. The intelligence function is divided into an enemy forces/plans element and an intelligence processing and evaluation element. These functions mimic the structure of the JFACC. Likewise, Air Force FAC's mimic the organization of the Army units they work with.
- The coordinating organizations maintain ties with their own service organization. The BCE, for example, is still under the Army chain of command and is attached at the Corps level.

The coordinating commands represent a "total solution" at all levels of the chain of command.

How can different kinds of organizations work together?

Facilitator organizations

If the services can be thought of as different types of computers, we can ask: How should we plug them together? How many connections

should we have? What should the plugs represent and what kind of information should be carried over the connections?

Service organizations have grown up to reflect the fundamental command and control principles involved in conducting combat operations in the land, air, or sea environment they must operate in. The ground organizations are radically different from those adopted by the air or sea services. This reflects the radically different battle management problems the services face.

Ground forces must manage many tens of thousands of individual combat units (soldiers) both operationally and in garrison. For air and sea forces the "garrison" or support force is significantly different from the force that does the fighting. When faced with administrative command and control all services tend to approach command in ways similar to the Army's.

However, when in combat the unit density goes down for the Air Force and Navy, but not the Army or Marine ground forces. That means the ground forces tend to retain the hierarchal, bureaucratic command structures used in peacetime during combat operations, whereas air and naval services move toward functional command organizations.

The Air Force and Army, and the Marine Corps within its MAGTF, get around differences in command organizations by developing specialized, dedicated organizations devoted to mimicking the organizational structure of the service they are responsible for coordinating with. These organizations are responsible for coordination between the parent service and the other service. These units have a well defined structure and mission, they are not ad-hoc or temporary. They also come equipped with the personnel and equipment required to do their job.

We call these organizations "facilitator organizations." Figure 8 illustrates the concept of a facilitator organization.

Figure 8. Facilitator organizations (notional organizations)

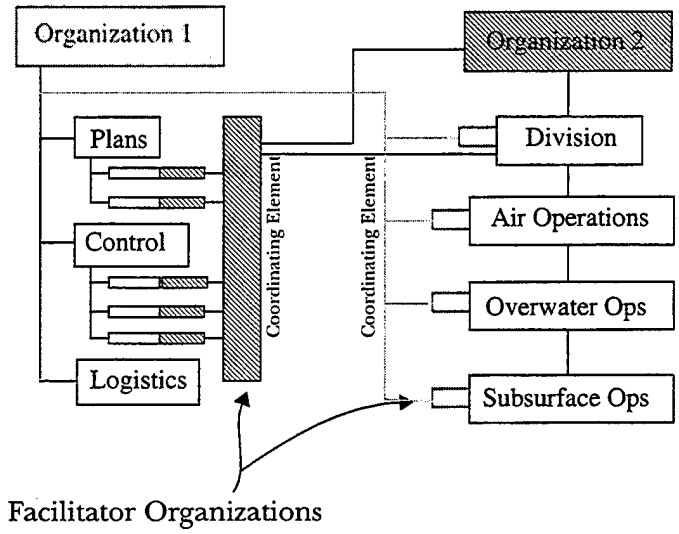

In figure 8 two different facilitator organizations coordinate operations between the two parent organizations. Each facilitator organization mimics the structure of the organization it is responsible for coordinating with, but retains ties back to its parent organization. These "parasitic" or "symbiotic" organizations provide an important translation function between the command structures of the two organizations. It is generally not sufficient for there to simply be exchange between the topmost components of the organizations. Coordinating and facilitating structures need to be inserted throughout the organizations, and affect all levels of decisionmaking.

This process functions much like a translator between two dedicated, real-time computer systems. These systems often work at fundamentally different hardware and software configurations. Even the timing and type of messages they use may be radically different. When it becomes necessary for the two disparate systems to communicate the solution is often to build a dedicated hardware and software system that will take commands and data from one system and translate it into the language of the other system. This is the function that the facilitator organizations provide.

Adapting facilitator organizations to naval operations

How can we adapt the Navy's organizational structure to those of other services? From what we have seen in our examination of the Air Force/Army and Marine Corps MAGTF it appears that a Navy facilitator organization must:

- Mimic the other service's command structure either through deliberate action or through an evolutionary process.
- Have a standing group of personnel who have been identified and trained to fill out the organization.
- Have communications and other equipment dedicated to providing connectivity between the Navy and other organizations and the Navy facilitators and principal Navy commanders.
- Operate across the entire organization. Most emphasis on Navy doctrinal development has been in relating forces at the Battle Group Commander and Fleet levels. However, looking at how the other services facilitator organizations work suggests that any changes must involve placing Navy representatives at all levels in the other services chains of command.

A logical place to begin thinking about a Navy facilitator organization would be in relating the Navy CWC structure to the Air Force/Army JFACC/TACC/TOC.

A Navy facilitator organization may be required even if the JFACC is staffed with joint officers. Even a joint organization will have the same structure, need to perform the same tasks, and will require the same real-time coordination capability. It may have a better understanding of naval strategic issues and tactical capabilities, but that understanding will fall far short of the minute by minute coordination required during real-time control of air operations.

If it is necessary to adapt the Navy to the JFACC, we must:

- Determine how the Navy's command structure can best accommodate a facilitating organization. It is important the Navy's requirements and concerns be identified and addressed.

- Identify critical nodes where the facilitator organization must "plug into" the Navy and Air Force organization.
- Understand how the Air Force and Army control their forces.

We must also address two questions:

1. Where should facilitator organizations "plug into" the Navy organization?
2. How should they overlap with the JFACC organization?

Figure 9 shows one possible set of Navy/Air Force/Army facilitator organizations. This prototype does not take into account the need for coordination with Marine Corps forces. An actual facilitator organization would need to coordinate between the four services. In addition it might also have functions for coordination with non-governmental organizations and allied forces. This goes beyond the scope and structure of current facilitator organizations. It also illustrates how naval forces become involved across the spectrum of joint warfare.

In this prototype, the Air Force or Army have officers assigned to each of the principal Navy warfare commanders the services may have interaction with. These officers are responsible for coordinating Air Force and Army support for naval operations. In addition to working with the warfare commanders, facilitating officers also work directly with the Battle Group/Force staff. It is important in the CWC structure for service interaction to occur at both the warfare commander and the CWC level.

Naval officers are assigned to the principal planning and operational components in the Air Force TACC structure. These officers are responsible for coordinating the use of naval assets with other forces. These assignments could be in an independent role or a supporting role. The principle areas that will require coordination will be plans, intelligence, and operations. Other scenarios might require coordinating airlift and sealift between services. In cases joint forces might create other, similar, facilitator groups.

Figure 9. Sample Navy/Air Force/Army facilitator organization

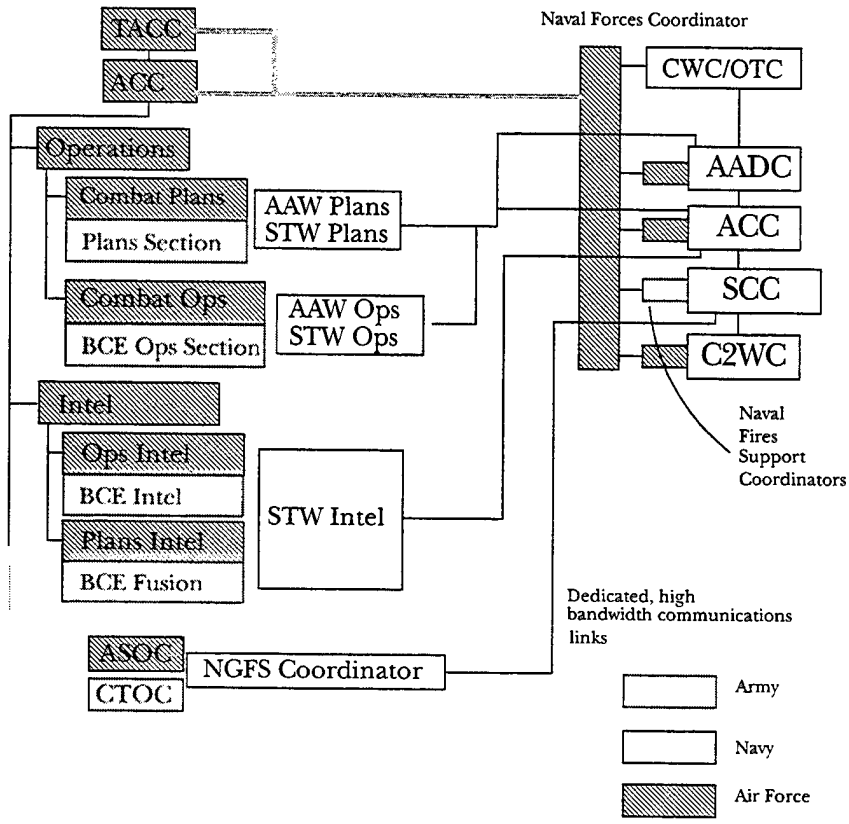

It is important that the Navy coordinate both the planning and operational actions with other services. Planning coordinators for both strike and air warfare operations would ensure that planners take into account Navy concerns and interests when developing airspace management, air tasking order (ATO) and other air issues. The Navy must coordinate planning and operational actions at both the day to day and overall policy level.

One feature emphasized in figure 9 is the presence of high bandwidth communications links between the coordinating groups and the battle group's warfare commanders. The officers assigned to coordinate with the TACC will provide the face-to-face contact in daily operations. However, they must also understand in detail the

policy and tactics being executed by the battle group staff. Understanding requires readily available communications between the battle force and the shore.

Another important point to note about figure 9 is that the coordinating groups are not organized along weapon system lines. While it is important to have liaison officers available who might have operational expertise in particular Navy weapon systems or tactics, liaison is not the job of the coordinating groups. Their job is to represent the warfare commander himself, understand his daily concerns, and ensure that these are reflected in the other services' planning and operations. The function of the coordinating group is not liaison, but planning and tactical communications.

The concept of facilitator organizations for littoral operations needs to be developed further. Other alternatives also exist. The Navy could continue modifying existing command structures to satisfy joint operational requirements. Or it could totally restructure CWC to bring it in line with joint command structures. Facilitator organizations represent a flexible compromise between these two alternatives.

In the next subsection we examine one concept under development that provides the ability to facilitate between an Air Operations Center (AOC) and a battle group staff.

Maritime Coordination Detachments

The Navy's Maritime Coordination Detachment (MCD) is a concept that has surfaced in the Navy to formalizes the process of providing augmentees and liaison officers to a Joint Air Operations Center (JAOC) [17]. Currently, this process is largely ad-hoc, with no organizational identity or training for the individuals assigned to the JAOC. The MCD is designed to mimic the Army's Battlefield Coordination Detachments (BCDs) and be staffed with a core of trained, experienced individuals and supplemented by liaison officers from the Carrier Battle Group involved in an operation.

The BCD is an Army liaison group provided to the AOC to help plan, coordinate, and deconflict air and land operations. The MCDs would, similarly, provide the AOC with the ability to plan, coordinate, and

deconflict air missions with naval forces. The MCD would include both liaison and augmentee officers; the augmentees would provide support for the Battle Group-unique assets such as naval aircraft of surface to air missile (SAM) ships. The MCD could also help coordinate Tomahawk land attack missiles (TLAM) missions in the same way that the BCD coordinates Army Tactical Missile System (ATACMS) missions.

The MCD is like a facilitator organization in that it connects the Navy command structure to the AOC. However, it differs from the concept of the facilitator organization in several ways:

- The MCD emphasizes liaison and augmentation whereas the facilitator concept emphasizes real-time communications and command.
- The organization is not symmetric. While the Navy will supply an MCD, there is no equivalent counterpart that can be supplied by the AOC to the battle group. This lack is consistent with the fact that the MCD is a liaison element; symmetric organizations focus on command and communications instead of liaison.
- The MCD attempts to address several issues, such as expertise and staff augmentation, in addition to the problem of staff communications.
- The MCD is relatively unstructured, as would be consistent with a liaison element. Facilitator organizations tend to have a command organization that mimics the organization of the receiving staff.

The lack of an AOC augmentation to the battle group staff is based on a perception that afloat forces do not need as many services or support functions from the AOC as the Army ground forces do. This is true if the principal purpose of the BCD/MCD is liaison. If, however, the principal purpose is to translate between different command structures, a two-way requirement for facilitation exists in the same way that a BCD has the Air Force FAC controllers assigned to ground units.

The MCD represents a beginning step toward developing an ability to translate the unique requirements of Navy command organizations into the joint, interservice, or coalition arena. The facilitator organization concepts described here provide a theoretical framework for developing the MCD concept. As the specifics of an MCD continue to be developed in exercises and other tests, the concepts of facilitation, communications, and organizational compatibility can be used to test and further refine the concept.

Appendix A: Military organizational structures

In this appendix we summarize the organizations used by each of the services for command and control of air, ground, or naval forces. Where specific organizational structures have evolved from service specific to joint structures (primarily in the air), we include the joint structures.

Army

This section discusses how the Army organizes to control its combat forces. Because there are many different Army units, we look only at a mechanized infantry division.

Organization

The Army, like any military service, is organized flexibly to accommodate many different missions and environments. Individual Army units may be assigned to work at a variety of organizational levels. Units can be detached and reattached depending on the particular mission. However, there are general organizational configurations for Army units. Figure 10 gives a complete breakdown of a typical Army corps along with one of its associated mechanized infantry divisions. In the following paragraphs we will discuss each component of this organization in greater detail.

Corps

As figure 11 shows, the corps is divided into four parts:

- Headquarters and support
- Combat divisions
- Corps artillery
- Administrative and financial commands.

Figure 10. Army corps organizational breakdown[a]

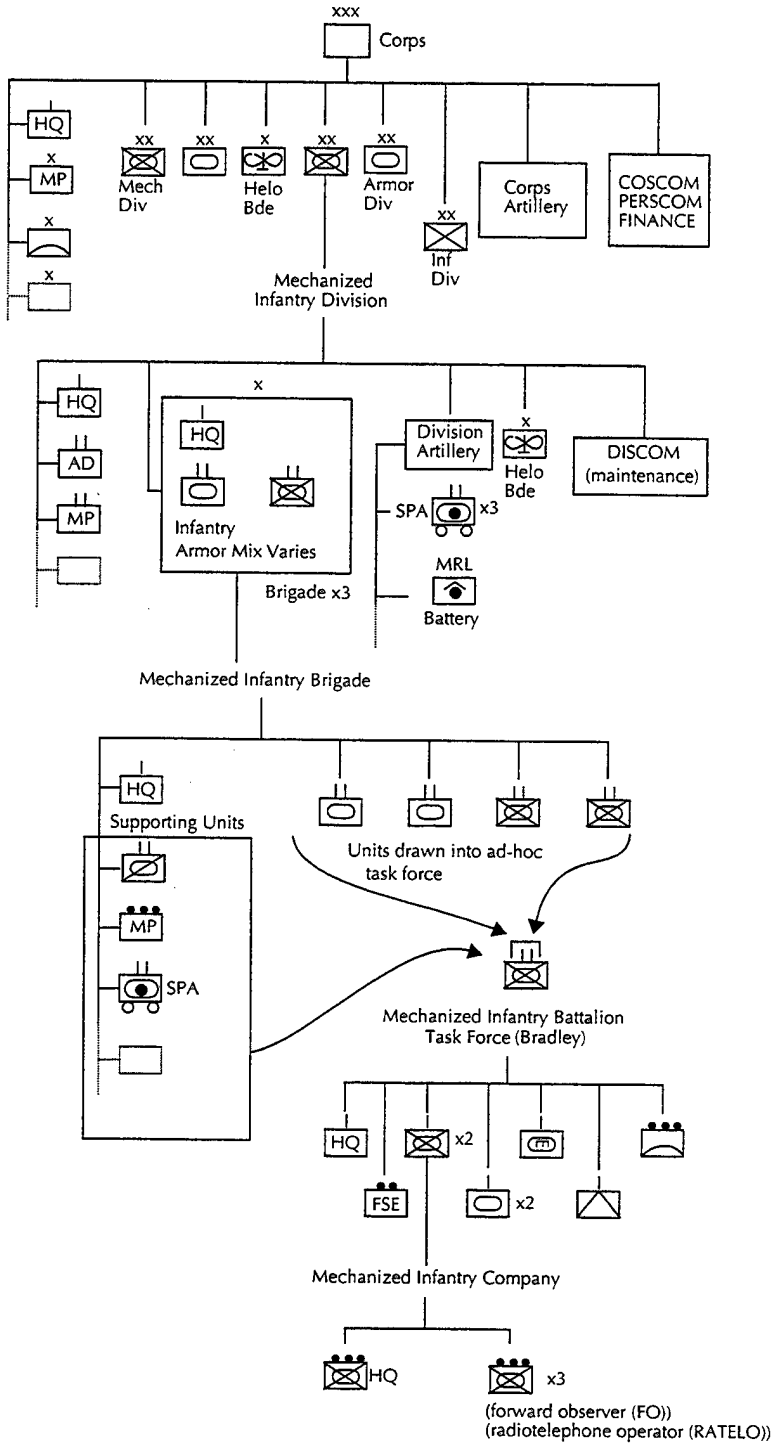

a. For a key to unit symbology, see appendix B.

Figure 11. Army corps organization[a]

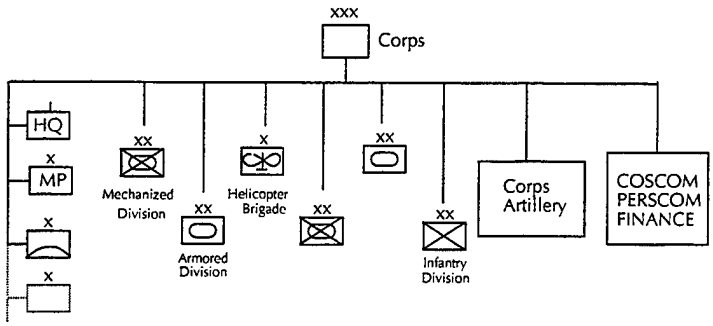

a. For a key to unit symbology, see appendix B.

The principal function of a corps is to plan and conduct major battles. A corps must also synchronize its subordinate units.

Corps organizations, as with most other Army organizations, are tailored to the theater in which they are deployed. They contain all of the Combat Service Support (CSS) they need for sustained operations. The corps usually contains several combat divisions. It also may have a wide range of corps assets for special combat functions. These may include helicopter brigades, engineer brigades, armored cavalry brigades, or military intelligence (MI) and military police (MP) groups.

If you look down the organization chart in figure 10 you will see there are three elements most Army organizational entities have in common. These are:

- Support elements (headquarters, MP, MI, engineer, or other brigades)
- Combat elements
- Combat Service Support elements.

At some point in the organization these functions begin to drop off. The battalion is the smallest Army entity with an independent CSS capability. Almost every entity in the organization has some headquarters or staff support; even a platoon will have a platoon commander and radioman [5–18].

Division

Divisions are the basic units of maneuver at the "tactical" level of operations. Divisions are organized according to type and mission. Currently, there are infantry, armored, mechanized infantry (shown in figure 12), airborne, air assault, and light infantry divisions.

Figure 12. Mechanized infantry division[a]

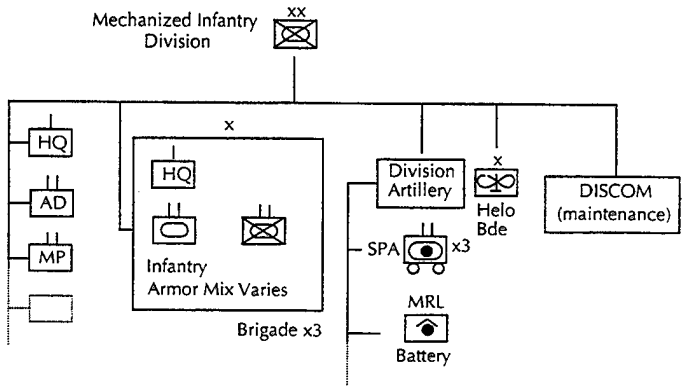

a. For a key to unit symbology, see appendix B.

Divisions are made up of combat brigades along with other attached support units. Support units attached directly to the division may include helicopter brigades, artillery, and headquarters regiments. Divisions also have an inherent CSS and maintenance capability.

The mechanized infantry division shown in figure 12 has three mechanized infantry brigades. Brigades are made up of three to five battalions. In the case of a mechanized infantry division, these battalions may be mechanized infantry or armor battalions [18–19].

Brigade

As was the case with divisions and corps, the brigades' primary mission is to combine the efforts of their subordinate commands (battalion, company) to accomplish tactical objectives. They are also responsible for synchronizing the operations of their subordinate units.

Figure 13 shows a mechanized infantry brigade. This brigade is made up of two armored battalions and two mechanized infantry battalions. It also has a headquarters unit along with some attached units. These might be an armored calvary battalion, a military police platoon, and self-propelled artillery.

Figure 13. Mechanized infantry brigade[a]

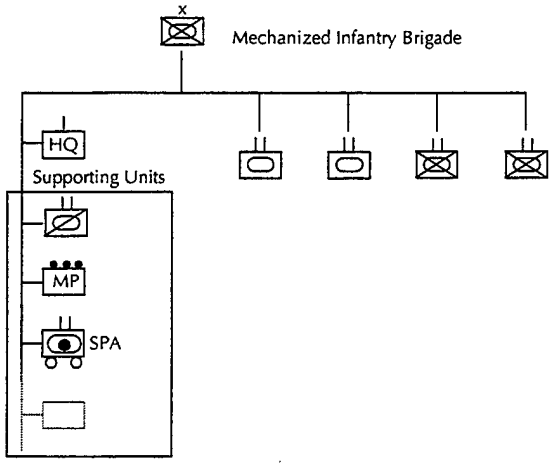

a. For a key to unit symbology, see appendix B.

Battalion

Figure 14 shows a typical Army mechanized infantry battalion. At the battalion level most organizations are made up of ad-hoc task forces designed for specific missions. These task forces draw on brigade or division resources. In figure 14 the battalion task force is made up of two armored companies and two mechanized infantry companies. The task force also has a headquarters, anti-tank, and armored engineer companies. It also has air defense and fire support element (FSE) platoons.

Figure 14. Mechanized infantry battalion task force (Bradley)[a]

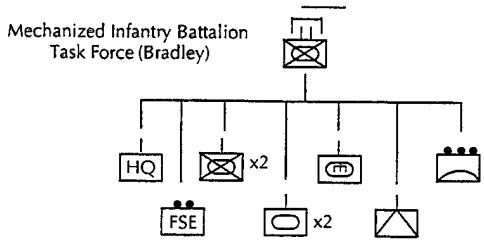

a. For a key to unit symbology, see appendix B.

Company

As shown in figure 15, a mechanized infantry company is made up of three mechanized infantry platoons and a headquarters platoon. The headquarters platoon will include a forward artillery observer and communications personnel.

Figure 15. Mechanized infantry company[a]

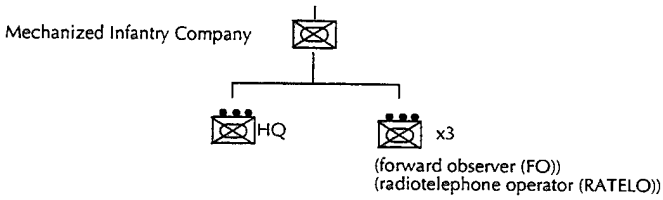

a. For a key to unit symbology, see appendix B.

Joint Forces Air Component Commander (JFACC)

There are many different systems that can be used for control of air forces. Figure 16 shows one possible configuration a Joint Forces Commander (JFC) could use to control air forces. In this case, there are air and land component commanders (other commanders are not shown for clarity).

Figure 16. Relationship between land and air components in a joint force

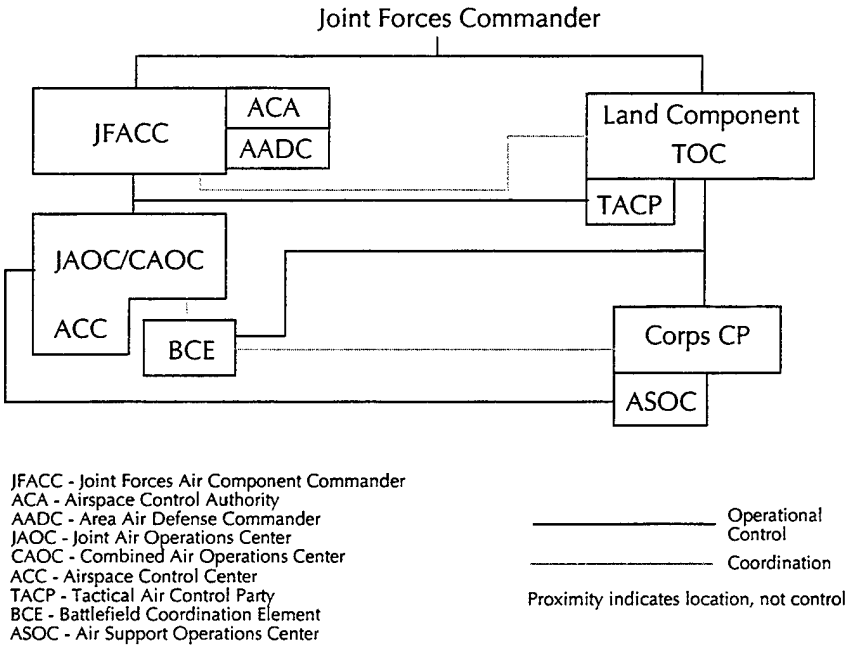

Source: References [20–21].

The system the JFACC uses to plan and direct tactical operations is collectively known as the Tactical Air Control System (TACS) [22]. JFACC's command post is the Joint Air Operations Center (JAOC or AOC if a joint command has not been established) [9]. These organizations, while developed as Air Force organizations for control of air assets, are typically used under control of a JFACC.

The JAOC is the part of the air component responsible for:

- Airspace control
- Ground target sensor surveillance
- Air support coordination
- Air strike coordination and control.

It functions as the real-time operational control center for the JFACC. The JAOC does this through operations, intelligence, and airlift staff functions.

The JAOC staff also works with several other organizations:

- Control and Reporting Center (CRC). The CRC is an Air Force asset that provides sensor and communications capabilities for the JAOC. The CRC conducts air defense and air traffic control for the TACS. It also coordinates air defense and artillery/bombardment fire plans. The CRC is responsible for relaying mission changes to airborne aircraft as directed. The Control and Reporting Post provides subsector radar control and surveillance for the CRC. It may also assume other CRC duties as directed. There may be more than one CRP.
- Airlift Control Center (ALCC). The ALCC is another Air Force asset responsible for tactical airlift operations.
- Air Support Operations Center (ASOC). The ASOC is an Air Force organization that plans and coordinates air support for ground forces. It is collocated with the Army's corps command post. Each ASOC has Tactical Air Control Parties (TACP). These are collocated with maneuver element headquarters down to the battalion level. TACPs are forward air controllers.
- The Battlefield Coordination Element (BCE).[2] The BCE is the Army's representation within the JAOC and will be discussed below.

These organizations are shown in figure 17.

2. Also called "Battlefield Coordination Detachment" (BCD). There are currently four BCE/BCD in the Army [23].

Figure 17. Command and control structures for tactical air operations

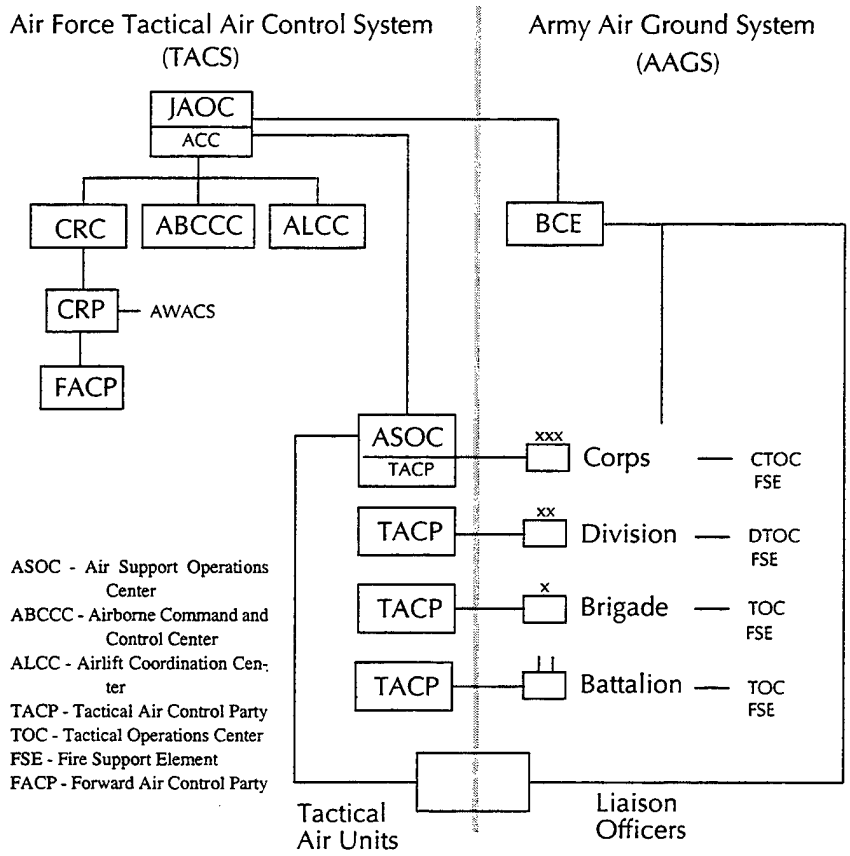

Figure 17 shows the functional components of the JAOC staff and their relation to their counterparts in the BCE. The BCEs is an Army unit whose primary mission is to coordinate between the air and ground component commanders through the JAOC [24]. It was developed to provide an interface between Air Force tactical aviation and Army forces in the field. While it has migrated into the joint arena, both the BCE and JFACC retain much of their original organization, manning, and intent. The BCE coordinates with the JAOC in the following areas:

- Plans—coordinates the Army's (similar functions exist for the Marines, see the next section) tactical air support requirements with the Air Tasking Order (ATO) planners.

- Intelligence Fusion—coordinates intelligence analysis used in updating the ATO.
- Intelligence Development—develops enemy order of battle and target information. There are two components to the JAOC/BCE intelligence function. The one described in the previous bullet assesses current friendly and enemy intelligence with the goal of updating the ATO.
- Air Defense Artillery (ADA) and Army Airspace Command and Control—coordinates ADA and ACC functions with the TACC plans and operations sections.
- Operations—monitors execution of the current ATO and coordinates changes. It monitors the real-time battlefield situation and keeps the ground component commander informed of the tactical air situation.
- Airlift—coordinates Army airlift support with JFACC airlift operations.

The BCE also has Army liaison officers with the supported corps and supporting air wings. Note that these are Army officers responsible for coordinating the BCE's operations with Army commands. They are not Army liaison officers to Air Force commands. Figures 17 and 18 illustrate the BCE and TACC coordinating functions. As can be seen there, the BCE structure mimics that of the Air Force TACC. This allows for direct coordination of fires and plans between the Air Force and Army commanders [25].

The ASOC and BCE are a pair of "matched" organizations that provide for real-time control and planning between the Air Force and Army. The ASOC and TACPs are assigned to each level in the Army's corps organization. As described in the previous list of bullets, the BCE interacts with the plans, operations, and intelligence functions of the JAOC. The organizations are responsible for real-time coordination and planning of maneuver, fires, and force allocation. Both the ASOC and BCE are concerned with planning and execution.

Figure 18. BCE/TACC coordination

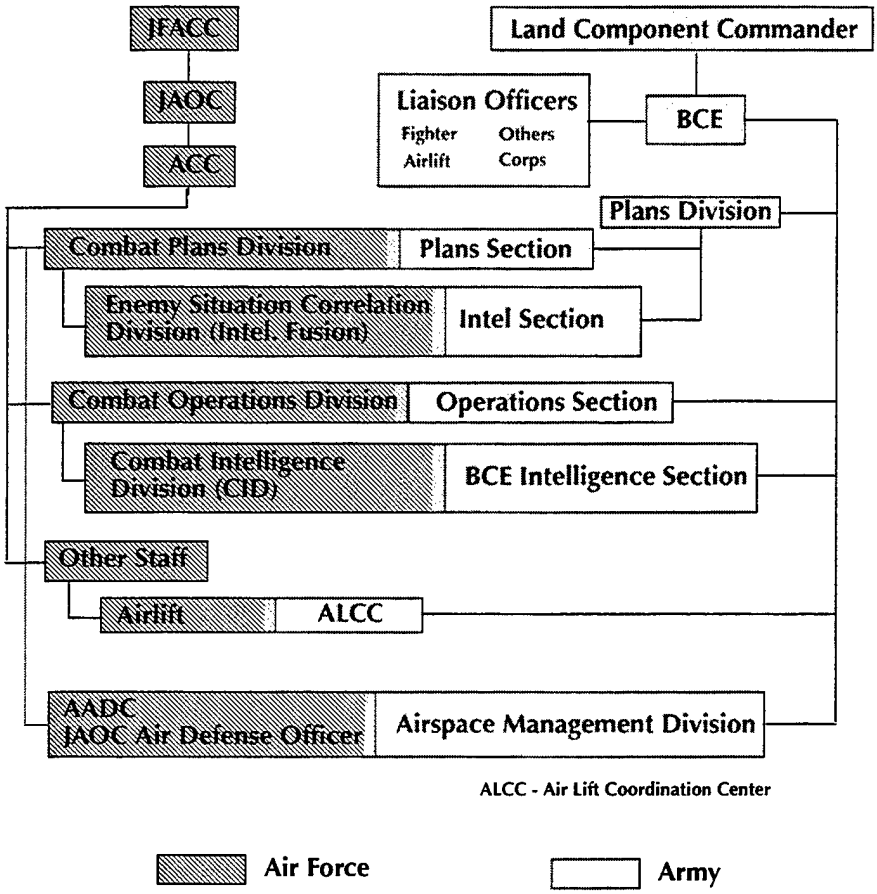

Source: References [21 through 25].

The role of the ASOC and BEC are significantly different from the role of a liaison officer. The liaison officer's primary concern is the transfer of information on intentions and capabilities. The ASOC and BCE are primarily concerned with operational coordination and control.

Marine Corps

MEF organization

At the highest level of command the Marine Corps has the Marine Forces commander (MARFOR). MARFORs are located on each coast. MARFORPAC controls two Marine Expeditionary Forces (MEFs) while MARFORLANT controls one. They act as the administrative and support headquarters for the MEF. The MEF is the largest deployable element in the Marine Corps.

The MEF typically controls an infantry division, an aviation wing, and a Force Service Support Group (FSSG). For some Major Theater Wars (MTW) the MEF may command more than one division. This happened during Desert Storm, where I MEF commanded 1st Marine Division and 2nd Marine Division and the associated aviation units.

Any Marine Corps command that contains ground, aviation, and combat support elements is called a Marine Air-Ground Task Force (MAGTF). The MAGTF is a combined arms command. A MAGTF with a division as the ground combat element is essentially equivalent to a MEF. The MAGTF is a unique organization in the military. Both the aviation and ground components train together extensively in coordinated operations.

Figure 19 shows the organization of a MEF/MAGTF based around a division. The ground element of a MEF is a division. The division, in turn, is made up of Marine infantry and artillery regiments. The division also has armor, reconnaissance, engineering, and headquarters battalions.

There are three infantry battalions in a regiment, which, in turn, are made up from rifle companies. The Marine division's organization resembles the Army corps organization detailed in figure 10 and caricatured in figure 5.

Figure 19. USMC MEF/division breakdown[a]

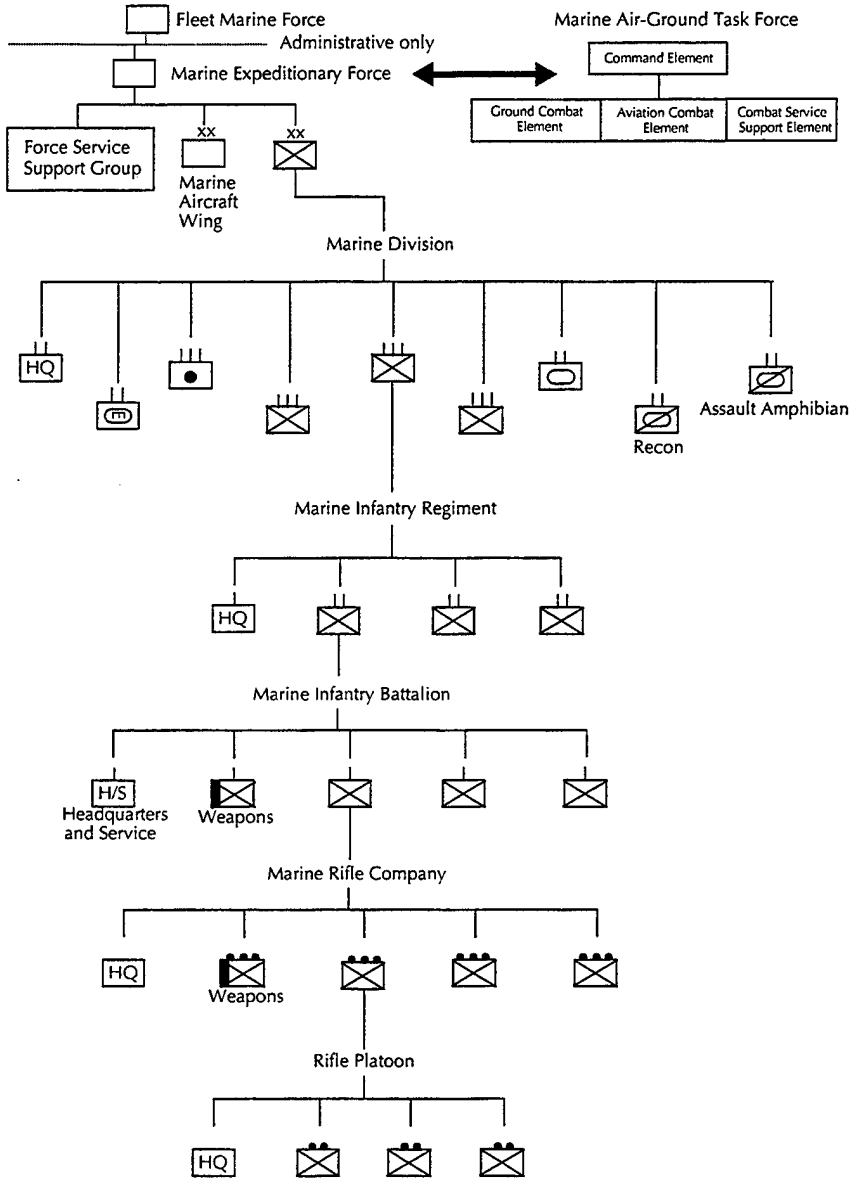

a. For a key to unit symbology, see appendix B.
Source: Reference [26].

Unlike the Army and Air Force, the Marine Corps has an integral fixed-wing close air support and logistics capability. Figure 20 shows the Marine Corps wing organization. The wing reports to the MEF/MAGTF commander. It is composed of wing command elements, special purpose commands, CSS support elements, and aircraft groups. Each group, in turn, contains headquarters, CSS, and special purpose squadrons, along with fighter/attack aircraft squadrons.

The Marine wing organizational structure resembles the overall structure of the ground forces shown in figure 10.

Figure 20. Marine Corps wing organization

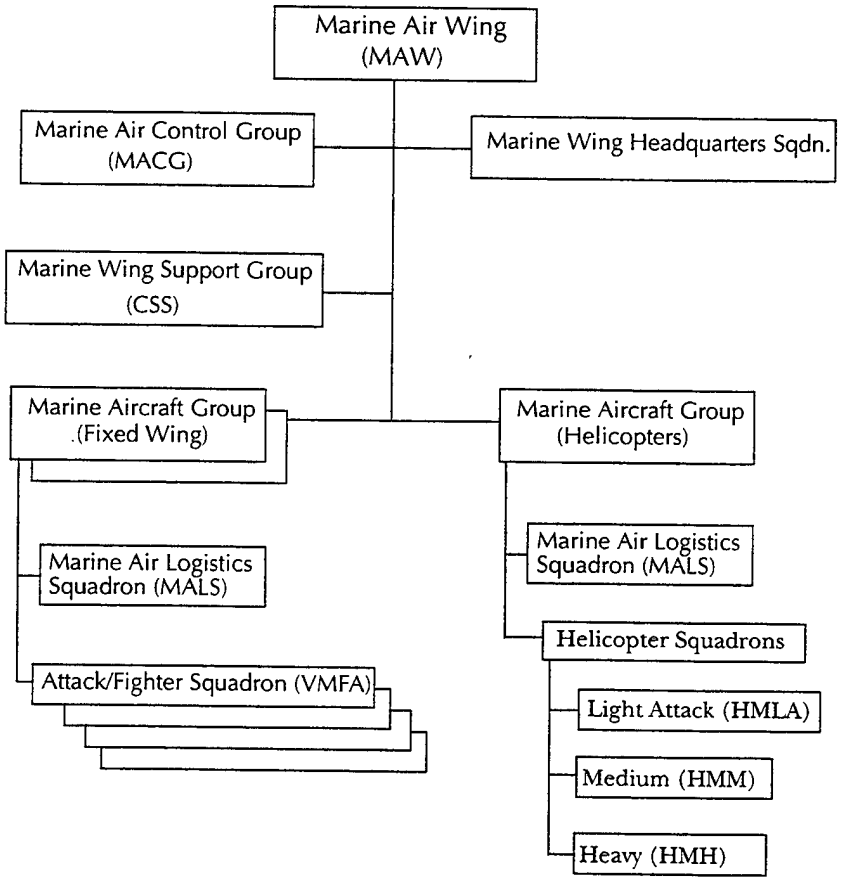

Source: Reference [26].

Marine air command and control

Real-time control and planning for sorties is done by the Tactical Air Commander (TAC) through the Tactical Air Command Center (TACC) [26–30]. The wing staff and commanders are intimately involved in the TACC command organization. For example, the TACC is part of the wing organization and the wing commander might be the TAC.

Figure 21 shows the Marine Corps Air Command and Control System (MACCS) for ashore operations. The TAC controls air operations through the TACC and its shipboard counterpart, the Tactical Air Direction Centers (TADC). The TADC is identical to the TACC, except that it directs air operations when a ship-based directions center is used. The TADC is generally established when the overall responsibility for air operations resides outside of the MAGTF.

The TACC/TADC is made up of three primary elements:

- Tactical Air Operations Center (TAOC). The TAOC controls "all en-route air traffic and air defense operations...in an assigned sector" [27]. It also has responsibility for radar surveillance elements.
- Marine Air Traffic Control Squadron (MTACS). The MTACS provides all weather air traffic control for the MACCS. It is responsible for traffic control and navigational systems.
- Direct Air Support Center (DASC). The DASC coordinates close air support controlled by the Forward Air Controllers.

The DASC coordinates MEF air operations between the wing and the division. The Fire Support Coordination Center (FSCC) is the ground forces' organization that is equivalent to the DASC. The DASC is an extension of the TACC and may, or may not, be co-located with the FSCC. The FSCC coordinates supporting arms and provides the DASC with a picture of the ground battle. This includes boundaries, fire support coordination measures, maneuver checkpoints, locations of friendly units, fire schedules, and commanders' schemes of maneuver. The DASC processes requests for friendly fire support, provides procedural control for transiting aircraft, and coordinates air missions with ground forces [28].

Figure 21. Marine Corps air command and control (ashore)

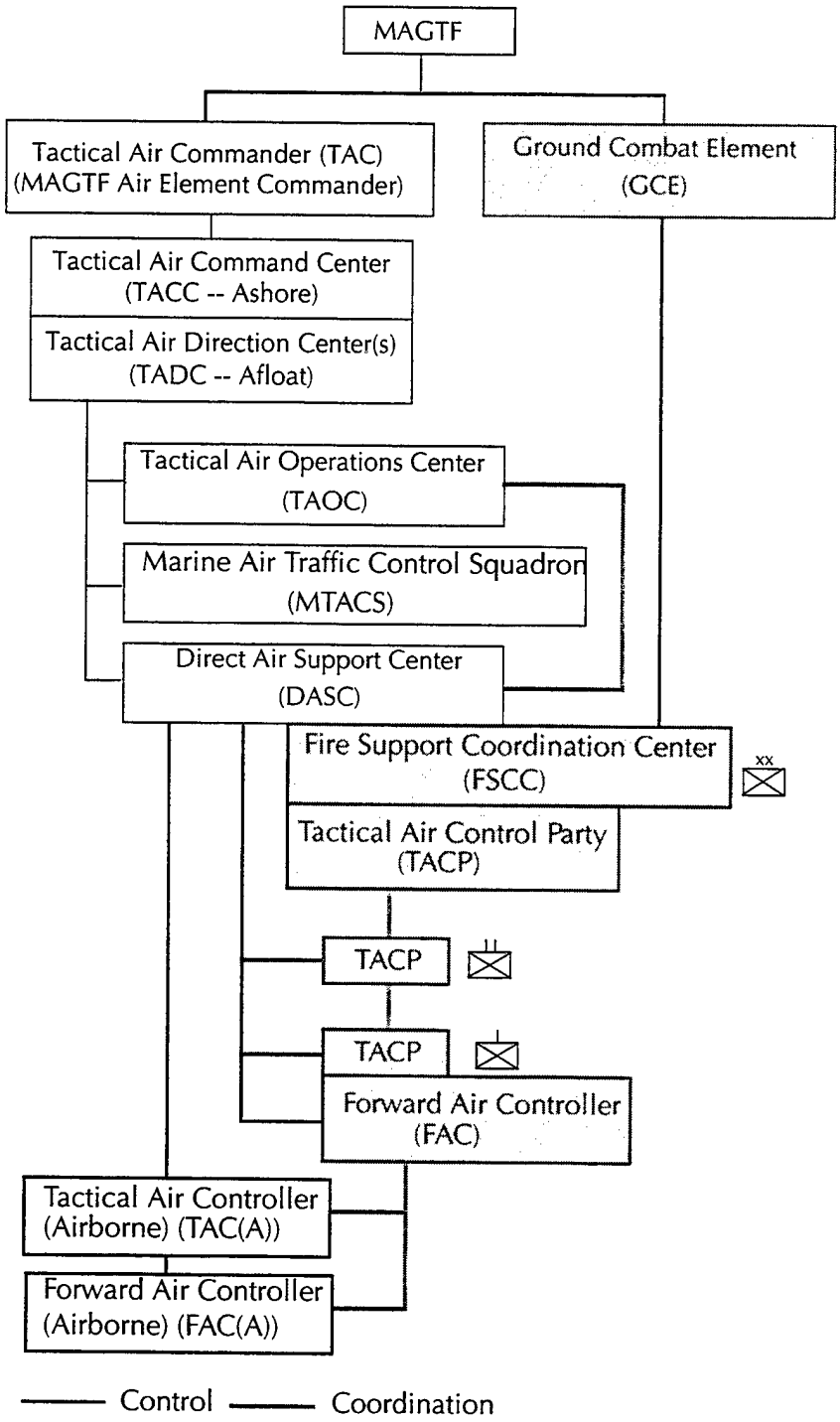

Source: References [26, 29, 30].

The JFACC and BCE are both similar to and different from the TACC and FSCC. The TACC is similar to an Air Force JFACC in both its mission and organization. Likewise, the FSCC resembles the BCE since it coordinates close air support operations with ground forces and it is an organic part of the ground forces. In turn, the DASC manages direct support sorties, and coordinates with the TACC. However, in both cases, the degree of integration between Marine air and ground forces is substantially closer than between Air Force and Army units. In the MAGTAF, the extensive combined training they receive effectively means that the air and ground forces are one, integral organization.

The DASC and the FSCC both have units that deploy with ground units in the field. While the DASC and FSCC coordinate on unit locations and ground/air force coordination, the Tactical Air Control Party (TACP) is the principal means for the ground commander to access the MACCS. The TACP:

- Provides for communication between the ground commander and air control agencies.
- Prepares and forwards requests for tactical air support.
- Controls close air support aircraft through the Forward Air Control (FACs).

Each Marine Corps division has 13 TACPs, one at division headquarters and one at each of the regiment and battalion headquarters. The TACP has a combination of air officers and communicators. The battalion TACP functions as both a requesting and a controlling agency [26]. There can also be airborne control through the TAC(A) and FAC(A). The FAC(A) is an airborne controller and may report directly to a ground unit or a TAC(A).

It is important to note the size and organization of the Marine Corps DASC. The TACPs work directly with the ground forces, and are assigned to each significant node in the command structure. Their deployment mimics the overall Marine Corps division command structure shown in figure 19. They also have provisions for communications connectivity as well as coordinating officers.

Navy

In this section we describe the traditional way the Navy has controlled its forces at sea: the Composite Warfare Commander (CWC) concept. We also discuss new concepts for command of Navy forces that are currently being discussed and used in fleet operations.

CWC

The Navy is organized into fleets, which, in turn are organized both administratively around functions (surface, air, subsurface, etc.) and operationally around groups of ships. As we did with the other services, we will be mostly concerned in this paper with how the Navy organizes for combat operations. The principal ship grouping is the battle group, which consists of an aircraft carrier, its airwing, and escorts. The battle group's commander reports to the fleet commander, who also is often double-hatted as the maritime component of the joint commander.

Below the fleet level, naval operational command and control has been organized around the concept of an Officer in Tactical Command (OTC) and a CWC. The OTC directed all of the forces involved in an operation. His primary mission, however, was to run offensive and power-projection operations. To allow the OTC to concentrate on offense, he may appoint a commander for defensive operations and stand up a defensive command structure: the CWC command structure. The CWC may be another commander appointed by the OTC or the OTC may also be the CWC. In most circumstances the OTC is the CWC.

The CWC command structure is organized according to the kind of warfare operations that will be conducted. There are commanders for antiair, strike, surface, and subsurface (antisubmarine warfare) operations. There are also coordinators appointed by the CWC. These coordinators negotiate with the warfare commanders over assets that have multiple capabilities. The most common coordinator is the Air Resources Coordinator (AREC), who is in charge of supplying aircraft to the warfare commanders. Surface ship allocations are usually made by the CWC while an external command, Submarine

Operating Authority (SUBOUPATH), controls all of the submarines and coordinates with the CWC and his warfare commanders.

The CWC organization is shown in figure 22. The CWC is responsible for:

- Determining how much authority is delegated to his warfare commanders.
- Command by negation. The CWC at all times retains the ability to negate the decisions of his subordinate commanders.
- Prescribing standardized reporting and other procedures.

The warfare commanders are responsible for:

- Defense of the force from threats in their area of responsibility.
- Maintaining a coherent tactical picture by obtaining, evaluating, and disseminating tactical information.
- Keeping the CWC informed about developments in their warfare area.

The CWC concept allows for decentralized control of defensive operations. This provides for flexibility and force defense in the face of limited or degraded communications systems or the loss of ships. To maintain command authority the CWC structure also provides for intervention by the CWC whenever necessary. The CWC may intervene at any time by negating the commands of his warfare commanders. If there are conflicts over resources between warfare commanders, the CWC may also intervene and allocate forces in accord with the overall tactical situation.[3]

3. For additional analysis of the doctrine and concept of CWC operations, see [31].

Figure 22. CWC organization

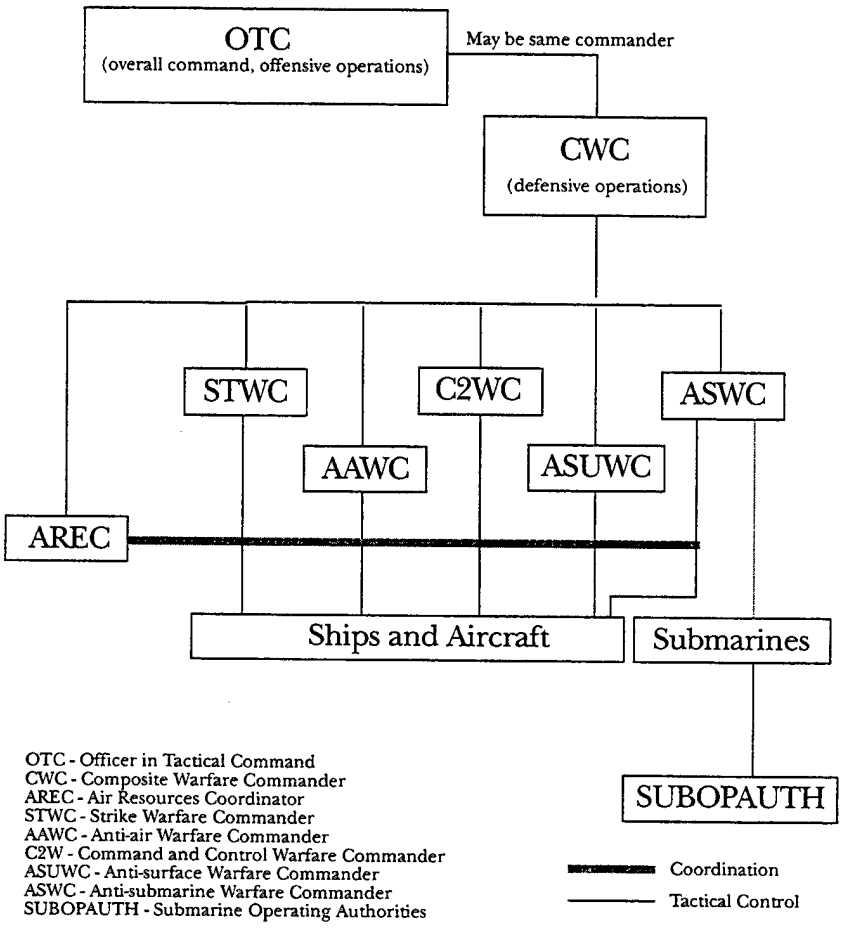

New concepts

The need to work with joint organizations has resulted in changes to the classical CWC concept. While these changes are beginning to be documented in doctrine and Naval Warfare Publications, command and control for Navy battle groups continues to evolve.

Concepts are currently being developed for new command and control structures both in the fleet as well as in school houses and at the Navy's doctrine command. The goal is to better parallel joint command and control, and to integrate the carrier battle group with the

amphibious ready group and marine expeditionary force (ARG/MEU).[4]

Figure 23 shows the CWC structure used during Desert Thunder for a multi-CVBG operation. It is functionally the same structure as the one shown in figure 22, with some functions combined and others renamed to correspond to their joint (JFACC) counterparts. For example, the various ship warfare commanders (surface, sub surface, etc.) have been combined under the Sea Combat Commander (SCC), while the Antiair Warfare Commander (AAWC) has been changed into the Area Air Defense Commander, and the Strike Warfare Commander (STWC) changed into the Air Combat Commander.

There have also been some resource coordinators added, in some cases to manage systems, and in others to coordinate assets that previously had other coordinators. Otherwise, the general set of responsibilities as outlined in the CWC concept have remained the same with the addition of some new responsibilities. For example, the AADC will now have responsibility for area ballistic missile defense as well as air defense operations.

4. In most cases the importance of the integration of CVBGs and ARGs has been secondary to the reorganization of the various warfare commanders to better align them with joint command and control organizations, primarily the JFACC. This realignment is the part of the organizational change we focus on in this paper.

Figure 23. Desert Thunder Nimitz Battle Group Organization

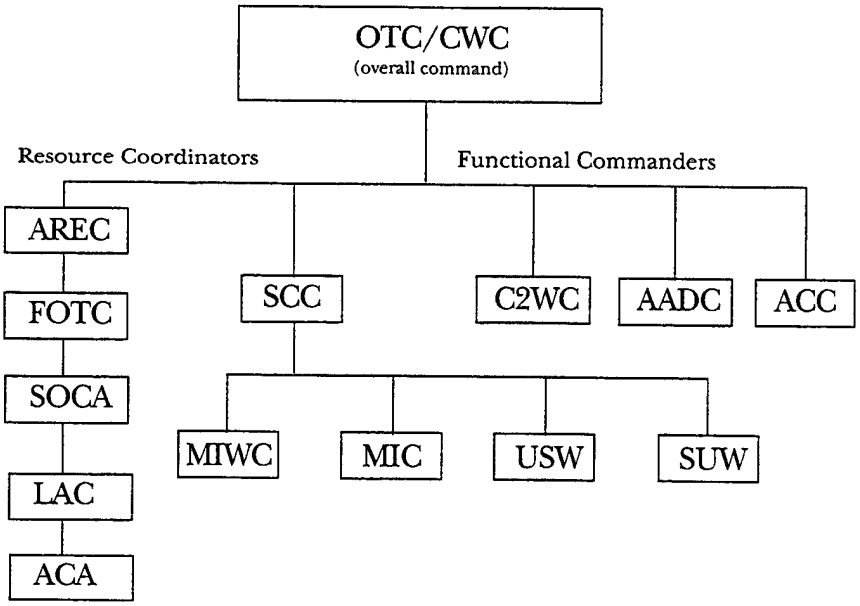

OTC - Officer in Tactical Command
CWC - Composite Warfare Commander
AREC - Air Resources Coordinator
FOTC - Force Over-the-Horizon Track Coordinator
SOCA - Submarine Operational Control Authority
LAC - Launch Area Coordinator
ACA - Airspace Control Authority
SCC - Sea Combatant Commander

MIWC - Mine Warfare Commander
MIC - Maritime Intercept Coordinator
USW - Undersea Warfare Commander
SUW - Surface Warfare Commander
C2WC - Command and Control Warfare Commander
AADC - Area Air Defense Commander
ACC - Air Combat Commander

Appendix B: Unit symbology

Figure 24 of this appendix provides the key for unit symbology used in figures 10 through 15 of appendix A.

Figure 24. Unit symbology

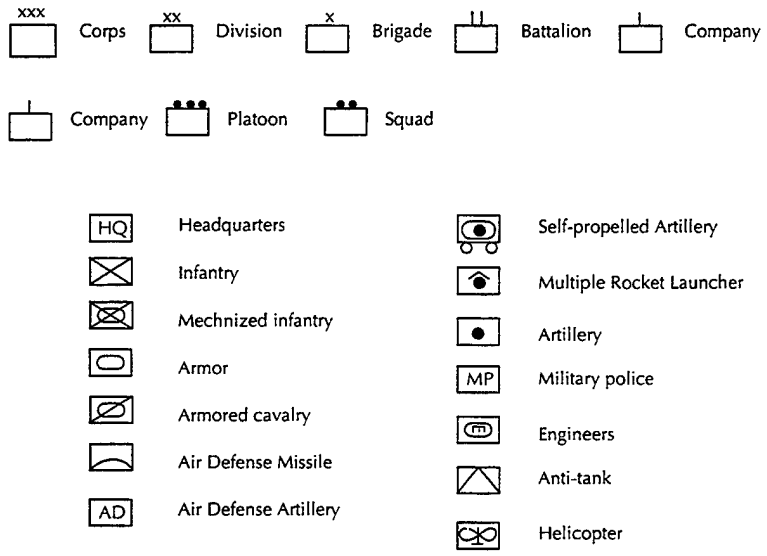

References

[1] Peter P. Perla et al. *The Navy and the JFACC: Making Them Work Together*, Apr 1993 (CNA Report 202)

[2] COL Edward C. Mann III (USAF). *Thunder and Lightning: Desert Storm and the Airpower Debates.* Maxwell AL: Air University Press, Apr 1995

[3] Barry P. Messina. *Development of U.S. Joint and Amphibious Doctrine, 1898-1945*, Sep 1994 (CNA Research Memorandum 94-103)

[4] Department of the Army, Field Manual 100-5, *Operations*, 5 May 1986

[5] B. Mandlebrot. *The Fractal Geometry of Nature.* San Francisco: W. H. Freeman, 1982

[6] Joint Chiefs of Staff, Joint Pub 3-52, *Doctrine for Joint Airspace Control in the Combat Zone*, 3 Dec 1993

[7] Joint Chiefs of Staff, Joint Pub 1-02, *Approved Terminology*, Apr 1997

[8] Deputy Chief of Staff, Plans and Operations, United States Air Force, *JFACC Primer: Second Edition*, Feb 1994

[9] Department of the Army, Field Manual 100-103-2, *TAGS Multiservice Procedures for the Theater Air-Ground System*, Oct 1994

[10] Penny L. Wright and Stephen P. Robbins. *Organization Theory: Readings and Cases.* Edgewood Clifts: Prentice-Hall, 1987

[11] Richard L. Daft. *Organization Theory and Design.* West Publishing, 1989

[12] B.J. Hodge. *Organization Theory.* Boston: Allyn and Bacon, Inc., 1984

[13] Arthur Bedeian. *Organizations: Theory and Analysis.* Chicago: Dryden Press, 1989

[14] Jeffery Pfeffer. *Organizations and Organization Theory.* New York: Pitman Publishing, 1982

[15] Anat Negandhi (ed.). *Modern Organizational Theory: Contextual, Environmental, and Socio-Cultural Variables.* Ohio: Kent State Univeristy Press, 1973

[16] CAPT Robert L. King (USN) and James C. Wilson. "JFACC And The Navy: A Missing Piece," U.S. Naval Institute *Proceedings,* forthcoming

[17] Department of the Army, Field Manual 71-100, *Armored and Mechanized Division Operations,* 29 Sep 1978

[18] Department of the Army, Field Manual 71-101, *Infantry, Airborne, and Air Assault Division Operations,* 26 Mar 1980

[19] Department of the Air Force, Headquarters Tactical Air Command, *TAC Regulation 55-46: The Tactical Air Control System (TACS), Air Support Operations Center (ASOC),* Langley Air Force Base, 20 Apr 1988

[20] Department of the Air Force, *Headquarters Twelfth Air Force (ACC), Air Operations Center (AOC) Standard Operating Procedures (SOPs),* 17 Dec 1993

[21] Department of the Air Force, *Tactical Air Control System (TACS),* 2 Feb 1979

[22] First Battlefield Coordination Detachment, *Command Brief,* Ft. Bragg, North Carolina, 1998

[23] MAJ Darryl A. Williams (USA). *Facilitating Joint Operations: The Evolving Battlefield Coordination Element.* Command and General Staff College Thesis: Ft. Leavenworth, Kansas, Mar 1996

[24] Second Battlefield Coordination Detachment (BCE), *Standard Operating Procedure (SOP)*, undated

[25] U.S. Marine Corps, *Doctrinal Publications Guide*, FMFM 0 -3, PCN 139 000012 00, 30 May 1980

[26] U.S. Marine Corps, Operational Handbook (OH) 5, *The Marine Aviation Combat Element (ACE)*, 7 Nov 1985

[27] U.S. Marine Corps, Fleet Marine Force Manual (FMFM) 6-18, *Techniques and Procedures for Fire Support Coordination*, 27 Mar 1992

[28] Landing Force Training Command Pacific, *Naval Tactical Air Control System*, Jul 1993

[29] Landing Force Training Command Pacific, *Fire Support Coordination Agencies*, Feb 1993

[30] Maureen Wigge and George Walne. *Doctrinal and Operational Issues in Naval Command and Control* (U), Oct 1994 (CNA Research Memorandum 94-171)

List of figures

Figure 1. Analyzing organizations 6

Figure 2. Corps-level framework. 12

Figure 3. Division-level framework 12

Figure 4. Brigade-level framework 13

Figure 5. Battalion-/company-level framework. 14

Figure 6. Air Force TACC organizational framework 16

Figure 7. CWC organizational framework 19

Figure 8. Facilitator organizations (notional organizations) 33

Figure 9. Sample Navy/Air Force/Army facilitator organization 36

Figure 10. Army corps organizational breakdown 42

Figure 11. Army corps organization 43

Figure 12. Mechanized infantry division 44

Figure 13. Mechanized infantry brigade 45

Figure 14. Mechanized infantry battalion task force (Bradley) 46

Figure 15. Mechanized infantry company 46

Figure 16. Relationship between land and air components in a joint force 47

Figure 17. Command and control structures for tactical air operations 49

Figure 18. BCE/TACC coordination 51

Figure 19. USMC MEF/division breakdown 53

Figure 20. Marine Corps wing organization 54

Figure 21. Marine Corps air command and control (ashore) 56

Figure 22. CWC organization 60

Figure 23. Desert Thunder Nimitz Battle Group Organization 62

Figure 24. Unit symbology 63

01/11/2001
CRM D0001732.A1 Final

CNA