THE CADRE PAPERS

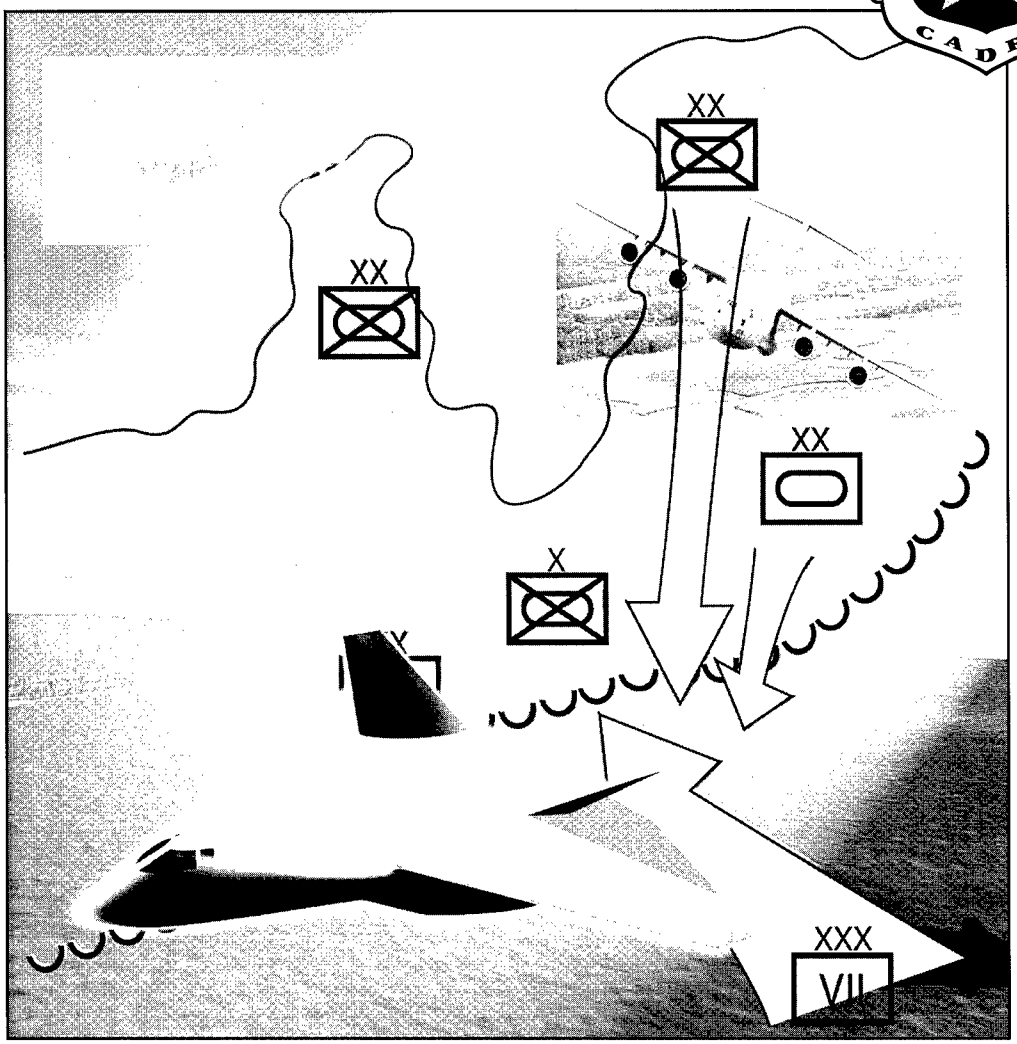

Paradigm Lost

Rethinking Theater Airlift to Support the Army After Next

Lt Col David W. Allvin, USAF

After you have read the research report, please give us your frank opinion on the contents. All comments—large or small, complimentary or caustic—will be appreciated. Mail them to CADRE/AR, Building 1400, 401 Chennault Circle, Maxwell AFB AL 36112-6428.

Paradigm Lost

Rethinking Theater Airlift to Support the Army After Next

Allvin

DISTRIBUTION STATEMENT A
Approved for Public Release
Distribution Unlimited

Thank you for your assistance

Cut along dotted line

DTIC QUALITY INSPECTED 4

20001011 003

COLLEGE OF AEROSPACE DOCTRINE, RESEARCH AND EDUCATION

AIR UNIVERSITY

Paradigm Lost

Rethinking Theater Airlift to Support the Army After Next

DAVID W. ALLVIN
Lieutenant Colonel, USAF

CADRE Paper No. 9

Air University Press
Maxwell Air Force Base, Alabama 36112-6615

September 2000

Library of Congress Cataloging-in-Publication Data

Allvin, David W.
Paradigm lost : rethinking theater airlift to support the Army after next / David W. Allvin.
p. cm. — (CADRE paper ; no. 9)
Includes bibliographical references.
ISBN 1-58566-084-1
1. Airlift, Military—United States. 2. United States. Army—Reorganization. I. Title. II. CADRE paper ; 9.

UC333.A63 2000
358.4'17'0973—dc21 00-060594

Disclaimer

Opinions, conclusions, and recommendations expressed or implied within are solely those of the author and do not necessarily represent the views of Air University, the United States Air Force, the Department of Defense, or any other US government agency. Cleared for public release: distribution unlimited.

This CADRE Paper, and others in the series, is available electronically at the Air University Research web site http://research.maxwell.af.mil under "Research Papers" then "Special Collections."

CADRE Papers

CADRE Papers are occasional publications sponsored by the Airpower Research Institute of Air University's College of Aerospace Doctrine, Research and Education (CADRE). Dedicated to promoting understanding of air and space power theory and application, these studies are published by the Air University Press and broadly distributed to the US Air Force, the Department of Defense and other governmental organizations, leading scholars, selected institutions of higher learning, public policy institutes, and the media.

All military members and civilian employees assigned to Air University are invited to contribute unclassified manuscripts. Manuscripts should deal with air and/or space power history, theory, doctrine or strategy, or with joint or combined service matters bearing on the application of air and/or space power.

Authors should submit three copies of a double-spaced, typed manuscript and an electronic version of the manuscript on a 3.5-inch disk(s) along with a brief (200-word maximum) abstract. The electronic file should be compatible with Microsoft Windows and Microsoft Word—Air University Press uses Word as its standard word-processing program.

Please send manuscripts, inquiries, or comments to:

Dean of Research
Air University
CADRE/AR
401 Chennault Circle
Maxwell AFB AL 36112-6428
Tel: (334) 953-6875
DSN 493-6875
Fax: (334) 953-6739
Internet: james.titus@cadre.maxwell.af.mil

Contents

Chapter		Page
	DISCLAIMER	ii
	FOREWORD	ix
	ABOUT THE AUTHOR	xi
1	INTRODUCTION	1
	Assumptions and Limitations	2
	Notes	4
2	THE ARMY AFTER NEXT CONCEPT	5
	Genesis	5
	Force Structure—The Hybrid Force	11
	Summary	17
	Notes	17
3	THE ARMY AFTER NEXT IMPLICATIONS FOR THEATER AIRLIFT	21
	Austere Operations	22
	Cargo-Handling Capability	25
	Situational Awareness	26
	Defensive Systems	27
	Notes	32
4	CURRENT THEATER AIRLIFT CAPABILITIES	35
	C-130E/H	35
	C-130J (and J-30)	39
	C-17	41
	CH-47D	42
	V-22	43
	Coming Up Short	44
	Notes	47
5	BRIDGING THE GAP—FUTURE THEATER AIRLIFT CONCEPTS	51
	Austere Operations	51
	Cargo-Handling Capability	56
	Situational Awareness	60
	Defensive Systems	61

Chapter *Page*

It All Sounds Good 63
Notes 63

6 ANALYSIS AND CONCLUSIONS 67
Analysis 67
Austere Operations 67
Cargo-Handling Capability. 69
Situational Awareness. 70
Defensive Systems 71
Other Key Considerations 73
Conclusions 76
Notes 78

GLOSSARY 81

BIBLIOGRAPHY 85

Illustrations

Figure

1 Decisive Operations across the Battlespace 15

2 Robotic Transport System 57

3 Loading with Double-Hinged Cargo Ramp 57

4 Automated Manipulator Arm 58

5 Load-by-Wire Articulated Ramp 59

6 Layered Survivability 61

Table

1 Current Theater Airlift Platform Capabilities 36

Photographs

Page

Unloading the "Prime Mover" from a C-47 31

Boeing Tilt-Wing Advanced Theater Transport 52

Lockheed Advanced Theater Transport 53

Mobile Offshore Base 75

Foreword

Lt Col David W. Allvin's *Paradigm Lost: Rethinking Theater Airlift to Support the Army After Next* analyzes the theater airlift implications of the United States (US) Army's vision for land warfare in the twenty-first century.

Those planning the "Army After Next" (AAN)—now called the "Army Vision: The Transformation of the Army," which is a continuum of the AAN—envision a lighter, leaner, and more lethal force that will rely heavily on information dominance to maximize combat effectiveness throughout the projected nonlinear battlespace. Of chief concern in Colonel Allvin's study are changes in the role of theater airlift that the AAN may portend.

Colonel Allvin identifies theater airlift capabilities critical to the AAN concept and examines emerging systems that seem likely to furnish those capabilities. He argues that improvements in cargo handling, situational awareness, and defensive systems—as well as the ability to operate in austere conditions—constitute the most crucial future requirements for theater airlift. Based on his analysis of currently available data, Allvin concludes the most promising emerging systems for achieving required theater airlift capabilities include the tilt-wing concept, autonomous cargo-handling systems, and a standoff capability for examining the suitability of opportune landing sites.

Paradigm Lost originally was written as a master's thesis for Air University's School of Advanced Airpower Studies. The College of Aerospace Doctrine, Research and Education (CADRE) is pleased to publish Colonel Allvin's study as a *CADRE Paper*, thereby making it available to a wider audience of US Air Force and sister-service thinkers and planners.

JAMES R. W. TITUS
Dean of Research
Air University

About the Author

Lt Col David W. Allvin is currently serving at Headquarters Air Mobility Command as the assistant chief, Commander's Action Group. He was commissioned through the United States Air Force Academy (USAFA) in 1986. Graduating from undergraduate pilot training in 1987, he went to fly C-12s at Ramstein Air Base, Germany, departing in 1990 as a flight examiner. He was then stationed at McChord Air Force Base (AFB), Washington, as a C-141 aircraft commander, instructor pilot, and flight examiner. In 1993 he was selected for the US Air Force Test Pilot School at Edwards AFB, California, graduating in 1994. Among his primary test programs were the C-17A and C-130J platforms. Colonel Allvin has accumulated more than 4,000 hours in over 30 aircraft types. He has a bachelor's degree in astronautical engineering from the USAFA and a master's degree in business management from Troy State University. Colonel Allvin is a 1999 graduate of the School of Advanced Airpower Studies at Maxwell AFB, Alabama.

Chapter 1

Introduction

Si vis pacem, para bellum. (If you want peace, prepare for war.)

—Roman Proverb

Since the end of the cold war, rapid and sweeping changes in the strategic environment have forced the United States Army (USA) to evaluate new ways to support the national military strategy. The single greatest threat against which the force has organized, trained, and equipped no longer exists. Amorphous, unpredictable threats have emerged in its place. Cold war catchphrases such as the *Red Bear, nuclear winter,* and the *evil empire* have been replaced by *asymmetric operations, transnational threats, soft security issues,* and *cyberwar.* These terms represent threats that are not easy to visualize and are therefore also difficult to demonize. The military has been fighting an uphill battle to justify funding a defense force to deal with such threats. The fiscal year (FY) defense budget for 1998 was 3.2 percent of the gross domestic product (GDP), the lowest point since before World War II.[1]

In an effort to support the US engagement policy for the twenty-first century under austere budgets, the USA embraced the Army After Next (AAN) concept—now called the Army Vision: The Transformation of the Army, which is a continuum of the AAN. This concept is the follow-on to the Force XXI notion, which is a transformation of the current pared-down cold war structure to a lighter, leaner force. The cornerstone of the AAN is the ability to exploit technological advances to accomplish the mission with fewer forces across the spectrum of conflict. Accompanying this change in force structure will be an emergence of supporting concepts to include logistics and sustainment requirements. As forward basing dwindles and the force is increasingly based in the continental United States (CONUS), the role of the US Air Force (USAF) mobility forces will become more critical.

Currently, all USAF mobility assets are designed around the cold war concept of operations (CONOPS). Though the C-17 is still relatively "bright and shiny" (as of 1 January 1999 less

than 30 percent of the initial approved fleet had been fielded), Congress approved it for initial developmental test and evaluation in 1981 when the cold war was still in full swing. [2] The C-130J is the newest airlifter, but it represents a technological facelift on an airframe design that is more than 40 years old.

In large part, the operational concepts of Air Force airlift must evolve in concert with those of the Army. These new operational concepts will drive weapons systems procurements. Although the AAN vision is for a force that will not be fielded for another 25 years, procurement planning must be considered now. In the past two decades, the average lifetime of a weapon procurement program from initial testing to fielding has been 15 years.[3] Investigating air mobility concepts to complement the AAN now will enable the Air Force to integrate them smoothly with existing systems. As these legacy systems end their service life, the theater airlift concept will have matured and will ease the transition from Force XXI to the Army After Next.

This paper explores the AAN vision with specific focus on those elements that will require a shift in the emphasis of logistics considerations. It also analyzes those new requirements to determine their airlift mobility and sustainment implications across the spectrum of future Army operations. These requirements will dictate new capabilities the next generation of theater airlift platforms or systems must possess to support the new Army. An evaluation of current capabilities and USAF airlift vision will illuminate gaps between capability and requirements. Finally, this paper introduces new theater airlift platform and system concepts and analyzes them against the new capability requirements derived from AAN operational concepts. In short, this paper addresses the question: What theater airlift capabilities will be critical to support the Army After Next, and which emerging systems provide the best path to achieve such capabilities?

Assumptions and Limitations

To frame the argument appropriately, this paper makes several assumptions. The first is that the Army will not significantly stray from its AAN vision. This statement entails subordinate assumptions. One of the contributing factors behind the new Army vision central to the AAN and this paper is the

changing strategic environment and the assumption that such an environment will continue to exist.

Another element contributing to the formulation of the AAN is the reduction in defense budgets. This paper assumes that there will be no radical change in the defense spending posture of the United States. This assumption allows for fluctuations due to shifts in the balance of power in Congress and presidential administrations. These changes may shift spending trends, but a new monolithic threat such as the Soviet Union will not emerge to galvanize the nation and stimulate a defense buildup similar to that of the cold war.

Another major assumption is that the current technological trends will continue, and any shortfalls as they relate to the AAN concept will not significantly alter the strategic path. One challenge accompanying long-range planning is to reduce the impact of interim environmental perturbations on the accomplishment of the ultimate aims. This challenge is magnified for the AAN because of the unprecedented rate of technological change. As this paper periodically demonstrates, much of the foundation of the AAN concepts is based on *predicted* technological advances. This paper assumes that even if technology does not completely fulfill expectations, the end result will be a concept that closely resembles the AAN and its requirement for theater airlift.

The success of the AAN concept relies heavily on both strategic and tactical mobility. Several futuristic strategic mobility concepts (e.g., the Lockheed Advanced Mobility Aircraft, USAF Strategic Mobility Aircraft, transatmospheric vehicles, and fast ships) are worthy of study and debate as they relate to the AAN. Technological advances will allow greater cross-utilization of theater and strategic mobility assets. To examine its topic with sufficient depth, this paper is limited to the discussion of future *theater* airlift requirements. Strategic mobility is not completely avoided but is viewed as a secondary advantage in the fulfillment of AAN theater mobility requirements.

In investigating and evaluating future airlift concepts and their adequacy in supporting the Army After Next, this study does not deliver a detailed cost assessment. This is not to say that cost is disregarded as a factor when considering options. However, because most of the programs and concepts are still in the think-tank phase, a detailed cost analysis would be inappropriate. Instead, the criteria used to evaluate the adequacy of future airlift systems are mission capabilities. These

capability criteria include austere operations, cargo-handling capability, situational awareness, and defensive systems.

Notes

1. US Bureau of the Census, *Statistical Abstract of the United States, 1998* (Washington, D.C.: Government Printing Office [GPO], 1998), 358; and US Bureau of the Census, *Statistical Abstract of the United States, 1980* (Washington, D.C.: GPO, 1981), 366.
2. Charles L. Johnson, "Acquisition of the C-17 Aircraft: A Historical Account," Air Command and Staff College (ACSC) student paper (Maxwell AFB, Ala.: ACSC, April 1986), xvii.
3. Jacques S. Gansler, *Defense Conversion: Transforming the Arsenal of Democracy* (Cambridge, Mass.: MIT Press, 1995), 10.

Chapter 2

The Army After Next Concept

Where there is no vision, the people perish.

—*The Holy Bible*
King James Version, Proverbs 29:18

The Army After Next vision is intended to be more than merely a technology-based strategy for future land warfare. It is a holistic framework designed to reshape methods for the conduct of all future US Army operations. Some of these changes will directly affect the airlift capabilities required to support and sustain such an army. This chapter presents a synopsis of the genesis of the AAN concept, describes the fundamental scope of the project and assumptions therein, gives notional force structure, and lays out a rough sketch of the CONOPS in a future employment scenario. This primer is important because it provides the "what" and "how" of future operations as seen by the AAN planners and establishes the foundation for the derivation of theater airlift capabilities necessary to support the vision.

Genesis

In February 1996 amid the force downsizing, defense budget reductions, and an intimidating Quadrennial Defense Review, Army Chief of Staff Dennis J. Reimer tasked the US Army Training and Doctrine Command (TRADOC) to develop a long-range strategic vision. Specifically, he tasked TRADOC to "conduct broad studies of warfare to about the year 2025 to frame issues vital to the US Army after about 2010, and to provide those issues to senior Army leadership in a format suitable for integration into TRADOC development programs."[1]

This tasking signified the birth of the AAN project and later became the project's official mission statement. The project rapidly expanded, and by year's end involved more than two hundred planners and representatives from all areas of the Department of Defense (DOD).[2] This rapid start provided the project with the visibility and legitimacy it needed to leap into such a potentially controversial endeavor.

One of the possible sources of controversy stemmed from the fact that the Army was already pursuing a force modernization program in the Force XXI project. USA planners believed that this effort was not enough to ensure the maintenance of the Army's status as the world's elite fighting force well into the twenty-first century, and cited three reasons for a new approach.[3] First, Force XXI was designed to integrate new technologies with the current systems. Even with modifications, the systems built in the 1980s will have completed their usable service life by 2010. Second, the pace of technology suggests that it will not only change military hardware but also the organizations around which it is built. Force XXI initiatives primarily affect information systems and equipment, with significantly less attention paid to structure. Third, the planners felt that the rapidly changing geopolitical environment will eventually produce one or more "major competitors." This term intentionally does not mean "peer competitor," but rather a power that will be strong enough to require something more than obsolescent equipment to challenge it.[4]

Scope

In an effort to avoid the "technology trap" and develop a comprehensive study, the AAN project organized around four basic research areas: the geostrategic setting, human and organizational issues, evolution of military art, and technology trends.[5]

Geostrategic Environment. As expected in an endeavor that entails looking to the future, USA planners were forced to make some assumptions about the nature of the security environment in 2025. Among the most important were the following:

- The international system will continue to be based on a nation-state power base where sovereignty counts.
- Most armies will continue to exist to fight other armies.
- By 2025, there will be at least one major security competitor.[6]

As with any assumption, the validity of the list above is certainly open for debate. However, the inclusion of these assumptions is solely for the purpose of presenting an accurate framework within which the AAN concepts have emerged.

Human and Organizational Issues. The value of the technological advances and equipment improvements for the AAN will rest heavily on structure and personnel. With this in

mind, the AAN team developed the Army Imperatives, described as "an institutional culture that is receptive to change and a broad framework for managing the change."[7] Three of the six imperatives (force mix, material, and doctrine) pertain to the organizational constructs, and three (quality people, leader development, and training) address personnel issues.[8]

Among organizational challenges identified by the AAN are providing "flat" organizations, streamlining producer-to-user distribution systems, and effectively integrating an expanded civilianized/contracted force. These organizational imperatives were developed under the rubric of combat support, where the AAN focuses primarily on efficiency.[9] Research objectives regarding human elements include soldier selection methods, "cognitive congruity" between the digitized systems and human mental structures, and biomedical intervention studies attempting to maximize mental and physical performance.[10]

Evolution of Military Art. Military art applies to the entire realm of warfare from strategic planning to tactical application. The AAN's focus is primarily operational art, which is subsumed by military art. Operational art is the ability to integrate "key activities at all levels of war" and ensure that tactical victories lead to the attainment of strategic objectives.[11] With this in mind, the AAN project team identified "evolution of military art" as one of the four focused research areas. This area addresses the application of principles of war in ways that maximize the potential of emerging technologies within the projected future geostrategic environment.[12] The primary elements that make up this link between technology and the environment are the characteristics of the force structure and the CONOPS.

The AAN hybrid force idea integration team (IIT) was created to conduct research into both future force structure and operational concepts. This team conducts feasibility assessments of AAN concepts based on emerging technological advances. It also works with the Defense Advanced Research Projects Agency (DARPA), the Army Research Lab, and industry experts to exploit new technologies and create "spin on" military capabilities. Such coordination aids in redefining force structure and characteristics. The hybrid force IIT investigates future concepts of force employment to include fire support, mounted and dismounted operations, and maneuver support.[13] By continuously updating and refining concepts against the backdrop of an evolving new strategic environ-

ment, the AAN is attempting to account for unpredictability in the face of unanticipated technological advances. As a senior TRADOC staff officer put it, "With technological progress, organizational changes are (or should be) inevitable. . . . It is not proven that organizations and doctrine based on the M1A2 tank will be obsolete by 2020; it seems prudent, though, to forecast what effect emerging technologies might have on the way the future Army fights."[14]

Technology Trends. While making a concerted effort to develop a comprehensive long-term vision, the AAN team realizes that technological advances will be necessary if such bold thinking is to bear fruit.[15] One risk inherent in staking a long-range plan on something as unpredictable as technology is the potential cost of being wrong. This possibility is very real for the AAN. In an attempt to mitigate such an eventuality, the AAN team has taken steps beyond pursuing traditional hardware improvements and seeks out emerging technologies that exploit advantages in operational concepts as well as tactical engagements. The annual reports to the Army chief of staff clearly define the two central themes of the AAN as *knowledge* and *speed*. To support these themes, there are three main areas in which technology is being actively pursued: information systems, materials, and logistics capabilities.[16]

One technological category that the AAN is most dependent upon (and appears most blissfully optimistic about) is information systems. Exploitation of information technology is the cornerstone of the AAN concept, as well as the joint vision. The AAN definition of *information dominance* coincides exactly with the *Joint Vision 2010* definition of *information superiority*: "The capability to collect, process and disseminate an uninterrupted flow of information while exploiting or denying an adversary's ability to do the same."[17] In this arena, the AAN project is pursuing technologies that will acquire and process significant amounts of information, as well as robust capabilities to minimize vulnerabilities. For example, while future intelligence, surveillance, and reconnaissance (ISR) systems will integrate heavily with space-based assets, the AAN is pursuing such alternative concepts as advanced unmanned aerial vehicles (UAV) and anti-UAV technologies for situations in which space systems might be degraded.[18] Such redundant systems are intended to protect the "unblinking eye" of surveillance against potential asymmetric threats, thus preserving the information advantage.[19]

"Data correlated becomes information. Information converted into situational awareness becomes knowledge. Knowledge used to predict the consequences of actions leads to understanding. Thus the cognitive hierarchy."[20] To provide the necessary situational awareness, the AAN project is investing in "advanced information processing, employing automatic filters, decision support aids, comparative analysis, and distributed by multiple communications routes, . . . the means by which information is turned quickly into knowledge."[21] Such an investment might indeed be worthwhile, but the goal of turning information into knowledge might be somewhat lofty. As one Army officer who played on the enemy "red" team in an AAN war game put it, "Even with a dramatic improvement in the ability to 'see' the battlefield, it will remain possible to 'show' a course of action and then do something else. Time, speed, and distance factors will then determine if the target of the deception can react fast enough to counter the true intent."[22]

Materials technology investments have many different applications in the AAN vision, but the primary product is weight reduction. The mission-need statement the USA presented in 1996 for an Abrams tank replacement called for a 40 percent weight reduction.[23] To achieve such a reduction while maintaining sufficient protection will require significant advances in composite materials. The smaller advanced fighting vehicle concept will also exploit materials technology, not only in its lighter weight (15–20 tons) but also through the use of low-observable (LO) technology.[24] As information technologies most directly support the central theme of "knowledge," so material technology supports "speed," especially when coupled with advances in propulsion. With more power underneath a lighter frame, the goal of the advanced fighting vehicle is a 120 kilometer-per-hour road speed.[25] In addition to increased power, the AAN looks to propulsion technology to provide efficiencies well beyond current systems. Assuming they are achievable, such efficiencies can significantly reduce the logistic tail required for force sustainment.

Changes in the strategic environment resulting in reduced forward-basing capability highlight the importance of a more streamlined logistics system with a smaller footprint. The changes required are so broad and sweeping that the concept of a revolution in military logistics (RML) has been accepted as a prerequisite for achieving the desired capabilities of the

AAN.[26] Investigations into future logistics requirements primarily focus on the logistics principles of responsiveness, sustainability, and survivability.[27]

Responsiveness, or providing "the right support in the right place at the right time,"[28] presents a greater challenge to a largely CONUS-based force than to one that is forward deployed. Providing the right support to the right place requires knowledge of the location and status of supplies and weapon systems. The AAN is pursuing advances in information technology and refinement of total asset visibility (TAV) projects currently under way to provide this knowledge.[29] By merging this concept with the organizational imperative regarding "flattening" the command structure, the project is looking to new technologies such as "brilliant" computer cards and database replication to push logistic situational awareness down to the soldier level.[30] Determination of the appropriate level of information throughout the chain of command will be necessary to make this flattening effective.

Providing the support at the right time requires agile systems capable of rapid response. Many of the technological endeavors in the fields of materials and propulsion will have a direct impact on logistics. Any system that can be made lighter can be more easily transported. Likewise, reducing the size of equipment provides the opportunity to move more of it by a given mode of transportation. The pursuit of weight reduction in fighting vehicles, precision munitions, and power sources supports a more effective logistics system while enhancing maneuverability. Such advances in materials and propulsion will not only affect the fighting equipment but the systems designed to transport them as well. "A logistician that cannot keep up or see the friendly forces, cannot adequately support. If the combat platforms dramatically increase in speed and maneuver, support vehicles must have commensurate improvement. The two systems are inextricably linked."[31] With this in mind, the AAN has spelled out the need for speed and mobility in its tactical combat support elements, as well as enhancements in ultrafast sealift and airlift. "Although the Army is not directly responsible for the last two, no service has a greater interest in them."[32]

Technologies related to responsiveness and sustainability are complementary in nature. Fossil fuel improvements and alternatives, lighter armor and automotive materials, and lighter precision munitions not only reduce the logistics foot-

print but also provide for greater efficiency and reduced sustainment requirements. To enhance sustainability further, the AAN project is addressing maintenance issues through the concept of "ultrareliability" needed to support the fielded forces. The goal is to give operators of all systems the capability to repair most equipment. This concept will require onboard spares and technical instructions for repair work. The technology piece to this puzzle consists of developing "capabilities for anticipatory maintenance-self-diagnostics, programmable sensors, failure warning, etc."[33]

Survivability implications of combat equipment on the logistics system are apparent. The longer a system can last in combat, the less will be the ongoing sustainment requirements. The AAN is pursuing technologies in LO material, active protection systems, and advanced missile defense systems to enhance system survivability.[34] However, as a principle of logistics, survivability speaks to the "capacity of the [logistics] organization to prevail in the face of potential destruction."[35] The best way to ensure survival is to keep critical components of the system out of harm's way. "Although the United States should enjoy dominant battlefield awareness, there is a recognition that centers of gravity and critical points need to be reduced. For logisticians, this will provide additional incentive to avoid large static piles of material within the battlespace. Tactical and operational logisticians will 'reach back' as far as necessary, even to the CONUS base, to fulfill requirements while keeping the battlespace logistical footprint small."[36] Coming full circle, this aspect of survivability must compete with the principle of responsiveness. The AAN seeks advances in airlift, coupled with increased logistical situational awareness to provide the projection and sustainment capabilities, while decreasing system exposure to attack.[37]

Force Structure—The Hybrid Force

The hybrid force of 2025 will be forged from a range of functions, force structures, and capabilities spanning 20–25 years, from modernized AOE [Army of Excellence] organizations to AAN battle forces, each optimized for a specific set of missions and circumstances, but adaptable to meet a broad range of conditions.

—*Knowledge and Speed 1998*
Training and Doctrine Command

One of the primary threads running through the AAN vision is the necessity to integrate force structure through the age of rapid technological change. In doing this, there is a risk of limiting potential through incremental change. To avoid such detrimental compromise, the AAN has conceptualized the future force structure by dividing it into three discrete entities. The Army of Excellence (AOE) represents the current force structure. Force XXI is a projected force structure for the 2010–15 time frame. The AAN force is planning to make its concept fully operational by 2025. The distinguishing features of each are the technology-enhanced capabilities and the operational concepts by which the force will be employed. The AAN project monitors the developments of each and contributes to the integration of concepts. The ultimate goal is to maximize the capabilities of the hybrid force at every stage of its development.

The current AOE force structure is largely a product of the modernization program of the 1980s. Developed during the cold war era, the force emphasizes mass and overwhelming firepower. With the technology of the time, these characteristics of the mechanized force came at the cost of maneuverability and strategic mobility. With the abundance of forward basing at the time, strategic mobility was not a significant issue. The present force has made technological advances but must be lighter and more strategically mobile if the United States is to continue with its policy of engagement.

Force XXI "aims to exploit information technologies in order to fight more efficiently and maintain higher performance levels in both good conditions and bad."[38] Advanced war-fighting experiments (AWE) such as the "digitization of the battlefield" have been under way for several years and are yielding results that will enhance future systems.[39] These systems, which will be lighter and faster than the current AOE structure, are designed to be integrated in a comprehensive operational concept. The idea is to make Force XXI "more of a process than a 'force' in that the incorporation of information technologies opens the door to new and innovative ways to perform military tasks."[40] Force XXI will attempt to bridge the gap between aging AOE systems and newly arriving AAN systems.

The AAN force structure represents the final stage of the metamorphosis. The planners' hope is to field elite forces possessing capabilities made possible by technologies either just now emerging or not yet existent. Such forces will have strate-

gic strike capability accompanied by exceptional speed and lethality. These will be known as the Battle Forces.[41] The most capable Force XXI forces will provide the second echelon strength of the AAN. These medium weight assets will be the maturing systems fielded in the 2010 time frame and will make up the Strike Forces.[42] The leading edge of today's force structure will comprise the heaviest system, requiring the greatest logistics and sustainment requirements. These forces will serve as the Campaign Forces in the AAN concept of the hybrid force.[43] Each will fulfill a specific role in the projected concept of operations in 2025.

Concept of Operations

The AAN is developing an operational concept for its hybrid force that will provide significant effectiveness throughout the life cycle of a conflict. This concept is elaborated through the six patterns of operations developed by TRADOC to characterize land combat in the twenty-first century.[44] These patterns (project the force, protect the force, gain information dominance, shape the environment/set conditions for success, conduct decisive operations, and sustain the force) are "mutually supportive and nonsequential. They are conducted simultaneously and continuously through all phases of conflict."[45] It is within each of these patterns that the AAN seeks advantages.

Project the Force. From the end of World War II to the end of the cold war, the Army's ability to project the force was facilitated by the availability of forward basing. Today's environment does not allow such forward presence, forcing the Army to deploy largely from CONUS. To accommodate this deployment requirement, the AAN is developing the concept of revolutionary strategic mobility. Its technology strategy is in line with this concept, as its weight reduction would reduce the strategic airlift burden. In addition, the AAN is pushing for technologies in fast ships and ultraheavy airlifters to assist in the force projection role. The Battle Forces will be the first elements deployed, arriving rapidly with the lethality and maneuverability designed to accomplish "strategic preclusion" (deterring further provocative action by a demonstration of will and capability). This potential flexible deterrent cannot be accomplished organically, and the AAN realizes that "the primary responsibility for projecting the Army of 2025 will rest solidly on advanced deployment capabilities resident in the U.S. Air Force

and Navy."[46] For success, such a scheme would necessitate an expeditionary mind-set and require either a radical reduction in logistics buildup or tremendous strategic mobility.

The Strike Forces will follow the Battle Forces during projection. The Strike Forces will not be as nimble, but the technologies forged during the Force XXI era will produce a combat capability with high maneuverability and a lean logistics tail. These forces will assist the Battle Forces in shaping the environment. Finally, the Campaign Forces will arrive in-theater to provide increased strength and staying power to the hybrid force.

Protect the Force. To accomplish this difficult task, the AAN is placing emphasis on information systems ranging from human intelligence to complex ISR capabilities. These systems will allow the AAN to identify potential asymmetric threats against vital systems. In addition, planners are calling for an improved missile defense system to mitigate weapons of mass destruction (WMD) threats, claiming that "*for U.S. Joint Forces in 2025, few technological challenges will be as important as creating an effective missile defense*" (emphasis in original).[47]

Gain Information Dominance. This area is critical because information dominance must not only be attained but also *maintained.* The multilayered systems that are proposed present daunting tasks of fusing, processing, analysis, and dissemination. Through this network of systems, there must be multilayered situational awareness, which means decision makers must know if they are operating in an environment of information dominance. If they are not, they must be aware of which information systems are under attack and adjust their perception of operations accordingly.[48]

Shape the Environment/Set Conditions for Success. This pattern is suited for all phases of conflict. As a potential conflict emerges, Army special operations forces (ARSOF) will be uniquely qualified to operate within the specified region and be a valuable resource to the joint force commander. Before hostilities, rapid deployments and demonstrations of force will be exercised to improve the chances of strategic preclusion as well as for battle preparation. During combat operations, the AAN foresees operations to maintain dominance in all areas, with special emphasis on information and degradation of the enemy's precision strike capability.[49]

Conduct Decisive Operations. Through the force projection strategy, the AAN plan is to be postured to take advantage of

opportunities for swift and decisive victory as well as to prepare for extended operations. Extended operations do not mean attrition warfare. In fact, one of the underlying premises of the AAN is that due to the preponderance of high-value assets, attrition warfare must be avoided.[50] In extended conflicts, Campaign, Strike, and Battle Forces will operate synergistically against enemy objectives. Information dominance will provide commanders a picture of enemy positions and capabilities, giving them the advantage of directing each element against the type of objective for which it is best suited. Figure 1 illustrates the way in which several combat elements can be positioned to provide strike potential against several different objectives.

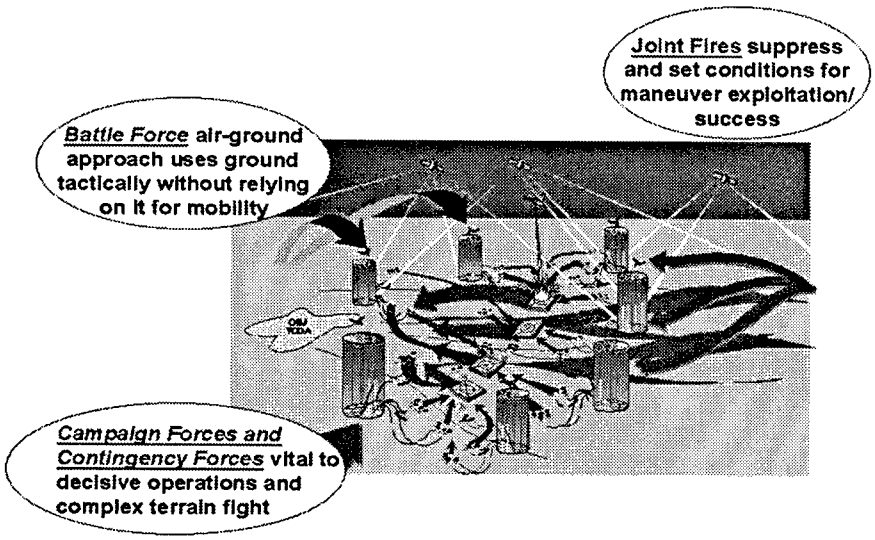

Source: TRADOC briefing slides, on-line, Internet, 5 March 1999. Available from http://www.monroe.army.mil/dcsdoc/fbdaan/briefings/aan/aanslidepool/newmodule/knowledge&speed.ppt.

Figure 1. Decisive Operations across the Battlespace

The most capable units of this hybrid force will be the Battle Forces. These forces will possess an unprecedented combination of maneuver and lethality, made possible primarily through near vertical maneuver. "At the tactical level, AAN research indicates that speed must be increased by a factor of two or more to overcome the strength of a knowledge- and precision-based defense . . . achieving this level of improvement

will only be possible by rotating the traditional two-dimensional orientation of forces into the vertical dimension."[51]

When combined with information dominance, this increased tactical mobility provides the foundation for a new, nonlinear battlespace environment. Small maneuver units will possess the advantages of traditional concept of mass (increased lethality), without its traditional drawbacks (lack of agility). One other vulnerability commanders will be able to mitigate is exposure. The maneuverable Battle Forces will be dispersed, thus decreasing the probability of detection. Through enhanced battlespace awareness, the commander can synchronize the forces, mass combat effects, and disperse the units to increase survivability. Through the successful orchestration of move-strike-move throughout the battlespace, "Battle Force operations will resemble an ambush dynamic."[52]

Sustain the Force. The success of sustaining the AAN operations will depend heavily on the much-needed revolution in military logistics. The AAN planners are attempting to tackle the problem in two ways: increase the *efficiency* of the logistics system and decrease the *requirements* for logistics. Efforts for increased efficiency include improved command and control systems and better in-transit visibility. Both of these pursuits will rely on information technology improvements to achieve the desired capabilities and on information dominance to maintain those capabilities during AAN operations.[53] The importance of logistic efficiency to operational success and the dependence on unproven capabilities highlight the risk involved in formulation of the AAN concept.

Sustaining the Battle Forces of the AAN will also present unique challenges. In order to increase survivability, the ground forces will be dispersed when they are not engaged. The airlift system responsible for maneuvering the units will become the primary line of resupply at the dispersed locations. "The constant massing and demassing of forces is possible only with the maturation of the operational concepts of *Joint Vision 2010* and the necessary technology. It suggests that the bulk of critical logistical support (fix, fuel, arm) [is] provided during those times when the battle force is demassed. It suggests that logistical support forces will have many of the characteristics of the battle forces."[54]

One such characteristic is increased survivability. Future resupply operations will be conducted throughout the battlespace,

not confined to the safe areas on the friendly side of the forward line of own troops (FLOT), as is the case with current doctrine.

Summary

The Army After Next is a far-reaching concept that relies heavily on emerging technologies. To the planners' credit, they have realized that technology is only as good as the system in which it operates. With this in mind, the AAN team has created a vision for the entire system, to include the world in which the technologies will exist (geostrategic environment), the use of the technologies (evolution in military art), as well as the users (human and organizational issues). With these primary areas of interest in mind, the AAN project is attempting to provide a path for successful application of land power in support of national objectives well into the twenty-first century.

As holistic as this concept may be, it is still heavily dependent on technology for its success. Among the major areas of technological pursuit are information systems, materials and propulsion, and logistics. As the concepts of operations evolve, the logistics concepts must evolve with them. Advances in the conduct of patterns of operations by light, lethal Battle Forces allow orchestrated concentration and dispersal during combat operations. These advances drive new sustainment requirements for those forces.

Notes

1. Quoted in Robert B. Killebrew, "The Army After Next: Defining Future Landpower Challenges," *Army*, February 1998, 23.

2. Anne W. Chapman et al., *Prepare the Army for War: A Historical Overview of the Army Training and Doctrine Command, 1973–1998*, chap. 6, "Doctrinal Renaissance," 1998, n.p.; on-line, Internet, 23 February 1999, available from http://www.tradoc.army.mil/historian/pubs/TRADOC25/chap6.htm.

3. Robert B. Killebrew, "The Army After Next; TRADOC's Crystal Ball Eyes the Service's Shape Beyond Force XXI," *Armed Forces Journal International*, October 1996, 38.

4. US Army Training and Doctrine Command (TRADOC), *Knowledge and Speed: The 1997 Annual Report on the Army After Next Project to the Chief of Staff of the Army*, July 1997, n.p. Hereinafter referred to as *Knowledge and Speed 1997;* on-line, Internet, 23 February 1999, available at "Papers" from http://www.tradoc.army.mil/dcsdoc/fbdaan/aamframe.htm.

5. Ibid., 1.

6. Killebrew, "The Army After Next; TRADOC's Crystal Ball," 44.

7. TRADOC, *Knowledge and Speed: Battle Force and the U.S. Army of 2025, The 1998 Annual Report on the Army After Next Project to the Chief of Staff of the Army* (Fort Monroe, Va.: TRADOC, 1998), 37. Hereinafter referred to as *Knowledge and Speed 1998.*

8. Ibid., 39–41.

9. See "The Human and Organizational Characteristics of AAN (2025)" within the "Knowledge & Speed" slide pool, 20 February 1999, available at "Briefings" from http://www.tradoc.army.mil/dcsdoc/fbdaan/aanframe.htm.

10. Michael Drillings, "Enhancing Soldier Performance: The Core of Combat Effectiveness" briefing slide no. 8, 8 June 1998, on-line, Internet, 23 February 1999, available on "SRO Briefings" at "Projects" from http://www.tradoc.army.mil/dcsdoc/fbdaan/aanframe.htm.

11. Joint Publication (JP) 3-0, *Doctrine for Joint Operations*, 1 February 1995, GL-10.

12. Ibid., II-1.

13. James G. Bray, "Army After Next Hybrid Force IIT," briefing, 4 January 1999, n.p.; on-line, Internet, 22 February 1999, available at "Hybrid Force IIT Project Room" at "Projects" from http://www.tradoc.army.mil/dcsdoc/fbdaan/aanframe.htm.

14. Killebrew, "The Army After Next; TRADOC's Crystal Ball," 37.

15. TRADOC, Knowledge *and Speed 1997*, "Technology: The Path to Knowledge and Speed."

16. TRADOC, *Knowledge and Speed 1998*, A-6, A-7.

17. Ibid., 23; and *Joint Vision 2010* (Washington, D.C.: Joint Chiefs of Staff, 1995), 10.

18. *Joint Vision 2010*, 25.

19. TRADOC, *Knowledge and Speed 1997.*

20. Jeffrey Cooper, "DBK and Future War," in *Dominant Battlespace Knowledge*, ed. Stuart E. Johnson and Martin C. Libicki (Washington D.C.: National Defense University Press, 1996), 89.

21. TRADOC, *Knowledge and Speed 1998*, 24.

22. John M. House, "The Enemy After Next," *Military Review*, March–April 1998, 23.

23. Jason Sherman, "21st Century Tank," *Armed Forces Journal International*, October 1996, 48.

24. Daniel Bourgoine, "AAN FY98 Insights Brief," 24 February 1999, slide no. 22, on-line, Internet, 28 February 1999, available from "Briefings" at http://www.tradoc.army.mil/dcsdoc/fbdaan/aanframe.htm.

25. Ibid.

26. TRADOC, *Knowledge and Speed 1998*, 28.

27. JP 4-0, *Doctrine for Logistic Support of Joint Operations*, 27 January 1995, II-1.

28. Ibid.

29. TRADOC, *Knowledge and Speed 1998*, B-9.

30. Ibid., B-12.

31. Col Gary J. Motsek, USA, "Logistic Support to the Army After Next Warfighters: A Time for Fundamental Change," in *AY 97 Compendium Army*

After Next Project, ed. Douglas V. Johnson II (Carlisle Barracks, Pa.: Strategic Studies Institute, 1998), 96.

32. TRADOC, *Knowledge and Speed 1997*.
33. TRADOC, *Knowledge and Speed 1998*, 29.
34. Ibid., A-6.
35. JP 4-0, II-3.
36. Motsek, 99.
37. Ibid., 37.
38. "Land Forces," *Strategic Assessment 1996: Elements of US Power*, n.d., n.p.; on-line, Internet, 23 February 1999, available from http://www.ndu.edu/inss/sa96/sa96ch14.html#subhead2.
39. Mark Hanna, "Task Force XXI: The Army's Digital Experiment," in *Strategic Forum* 119, July 1997, n.p.; on-line, Internet, 17 February 1999, available from http://www.ndu.edu/inss/strforum/forum119.html.
40. Earl H. Tilford, reviewing the paper of Gen David M. Maddox, USA, *National Defense into the 21st Century: Defining the Issues*, 6 June 1997, n.p.; on-line, Internet, 22 February 1999, available from http://carlisle-www.army.mil/usassi/ssipubs/pubs97/natdefns/defnsp2.htm.
41. TRADOC, *Knowledge and Speed 1998*, 17.
42. Ibid.
43. Ibid., 18.
44. "Characteristics of Force XXI Operations," *Land Combat in the 21st Century*, n.d., n.p.; on-line, Internet, 24 February 1999, available from http://www-tradoc.army.mil/text/landcmbt.htm.
45. TRADOC, *Knowledge and Speed 1998*, 19.
46. Ibid., 20.
47. Ibid., 22.
48. Ibid., 23.
49. Ibid., 25.
50. Killebrew, "The Army After Next; TRADOC's Crystal Ball," 45.
51. TRADOC, *Knowledge and Speed 1998*, 15.
52. Ibid., 27.
53. Ibid., 29.
54. Motsek, 102.

Chapter 3

The Army After Next Implications for Theater Airlift

Victory smiles upon those who anticipate the changes in the character of war, not upon those who wait to adapt themselves after the changes occur.

—Giulio Douhet

Army After Next concept developers envision a significant transformation in the composition of forces and the makeup of the battlespace. Despite this, the fundamental logistics function of "planning and executing the movement and sustainment of operating forces in the execution of a military strategy and operations" will still exist.[1] It is very likely that the future challenges will be greater. The increased complexity of the environment will demand a sophisticated logistics support structure in which precision and anticipation will take the place of stockpiling and surplus. The nature of the changes that must occur for implementation of the theater airlift piece of this new logistics system is derived from the changes that will take place in operational employment of the AAN hybrid force.

The concept of vertical envelopment is a shift in operational employment that will require a significant change in logistical support. Vertical envelopment involves using airborne assets to transport combat forces rapidly into positions most advantageous for massing fires. Primarily, the Battle Forces will accomplish this movement, allowing them to "use ground tactically without relying on it for mobility."[2] Reorienting maneuver into the third dimension implies moving entire fighting units. Granted, the Battle Forces will have a significantly better weight to firepower ratio than the current force, but such a shift in transportation medium will put substantially more reliance on airlift. This shift represents an expansion of current air assault operations and the role theater airlift will play in combat maneuver.

To accomplish vertical envelopment, airlift must be able to place the Battle Forces at or near the required location to optimize fire synchronization and effects massing. Because the objective areas will often lie in regions far from prepared run-

ways, the airlift system must be sufficiently robust to deliver combat power to austere locations.

By its very nature, dispersal places an increased burden on resupply efforts. Though each element requires fewer supplies, there are more destinations to support. Airlift doctrine currently proposes a "hub and spoke" concept in which supplies are delivered to a single location, then distributed throughout the theater as needed.[3] Future sustainment operations will require a system in which a single platform can deliver to several operating locations throughout the battlespace. Such an employment concept implies an increased exposure time for the sustainment platform. Also, the dynamic nature of the battlespace will necessitate greater flexibility on the part of the delivery system to account for situational changes that may occur during mission execution.

The changes in operational concept in the AAN do not alter the fundamental requirement for logistical support. The principles of logistics as described in Joint Publication (JP) 4-0, *Doctrine for Logistic Support of Joint Operations*, will remain valid. *Responsiveness* will continue to be the keystone, but *survivability* and *flexibility* in airlift operations will increase significantly in importance.[4] These logistics principles can also be defined as characteristics of an effective theater airlift support system. In evaluating airlift platforms, it is useful to identify capabilities required to exhibit the desired characteristics of the system. This paper identifies and analyzes four capabilities: austere operations, cargo-handling capability, situational awareness, and defensive systems.

Austere Operations

Aircraft operations were born in an austere environment. The Wright brothers first took flight in a field at Kitty Hawk. The very name "airfield" implies a patch of pasture that accommodates airplanes. The evolution of propulsion technology and aerofoil design brought with them the promise of increased lift capability. The demand for more payload capacity expanded at a greater rate than propulsion and wing technology, requiring increased takeoff and landing distance. Largely because of this phenomenon, the airfield has grown from a piece of open and cleared land to the 15,000-foot runways with sprawling concrete taxi and parking areas built to support the intercontinental bomber force.

As airfields grew in size and complexity, they developed an inherent weakness. The combination of high value assets and a fixed location made them lucrative targets. Such early airpower theorists as Guilio Douhet recognized the importance of attacking the enemy air forces on the ground in an effort to "kill the eggs in the nest."[5] AAN theater airlift operations at austere locations will reduce this vulnerability, as airfields will be temporary and will resemble those in use during the infancy of powered flight. Two specific capabilities will be required for aircraft to succeed in operations at austere locations: super short takeoff and landing (SSTOL) capability and the ability to identify adequate opportune landing sites (OLS).

Super Short Takeoff and Landing

The call for a theater transport aircraft with reduced runway requirements went out long before the development of the AAN concept. The C-130 has been the mainstay of theater airlift throughout its service life. Experiences in Vietnam illustrated the value of the payload capacity of the C-130 and the desire to operate out of smaller airfields.[6] In the early 1980s, the persistence of low intensity conflict throughout the world called attention to the importance of tactical airlift. This was especially evident in the development of AirLand Battle Doctrine. In studying such airlift requirements, "exceptional takeoff and landing performance" was identified. "Under today's emerging doctrine and even more so under future concepts, the need to rapidly move and resupply units and their equipment on a battlefield indicates that the flexibility of landing at almost any location will probably be a high priority requirement."[7]

With the demise of the cold war, several studies concerning future tactical airlift also identified the need for significant improvements in runway performance. The assumptions about future operations that drove these recommendations were similar to those envisioned by AAN planners: nonlinear battlespace, increased dependence on maneuver, and deep strike operations.[8]

Though the concept of SSTOL is relatively easy to grasp, the capability is more difficult to quantify. Runway requirements for conventional airlift aircraft vary with gross weight. Aircraft advertising short takeoff and landing (STOL) capability claim operational capabilities on runways of approximately fifteen hundred feet. SSTOL provides a measure of significant distinction between STOL and vertical takeoff and landing

(VTOL). Runway distance requirements for aircraft in this category vary, but for this paper SSTOL capability will be associated with runway operations into locations of less than one thousand feet.

From a purely logical standpoint, it would appear that SSTOL is still a second-best solution to VTOL transport. VTOL is not new to the airlift world and has been an integral part of land combat mobility and sustainment in the form of the helicopter. The CH-47D Chinook (and MH-47E variant) serves as the current frontline Army transport helicopter. It is a very capable platform, able to lift more than 36,000 pounds of fuel and cargo.[9] The V-22 Osprey is the newest vertical short takeoff and landing (V/STOL) aircraft, able to lift a fuel and cargo load of nearly 44,000 pounds.[10] Though each of these aircraft has formidable lift capacity, they possess neither the required cargo compartment dimensions nor the lift capability to support the AAN concepts of maneuver and sustainment. Changing the body shape and increasing the shaft horsepower required to improve the lift capacity on propeller-powered VTOL airframes have significant implications for disc loading on the propellers and foreign object damage (FOD) due to increased downwash.[11] SSTOL offers the promise of fulfilling the Army's future requirement to deliver 30 tons into a runway of 750 feet or less without the added difficulties associated with vertical lift operations.[12] One disadvantage accompanying a SSTOL option is that the need for a ground roll necessitates a degree of smoothness and firmness on the landing site not required for VTOL operations. Such a requirement increases the difficulty in identifying suitable landing surfaces.

Opportune Landing Sites

Finding a patch of land the right size to accommodate takeoff and landing is essential, but it represents only part of the solution to austere operations. To be suitable, the surface at the site must have certain characteristics. One that is critical to safe operations is the absence of any significant obstacle along the takeoff and landing area. Such an obstacle could pose a threat to the landing gear and render aircraft inoperable.[13] In unprepared landing areas, obstacles might not be readily visible, especially in areas with low-lying vegetation. Obstacles do not have to be prominent to be harmful.[14]

In addition to obstacles, the type and condition of the soil is of paramount importance. Soil that has a large amount of silt will not withstand an aircraft's weight as well as a hard-packed surface and will cause the aircraft to sink slightly. The sinkage results in a larger surface around the tires, increasing the coefficient of friction and requiring more power (and distance) to achieve takeoff speed. Currently, the standard unit of measurement for aircraft weight bearing capacity of surfaces is known as the California Bearing Ratio (CBR). To ensure safe operations at austere locations, it will be necessary to obtain the CBR or an equivalent to assess site adequacy.[15]

Information on the suitability of austere locations will be required on relatively short notice. It would be ideal to have an existing, accurate global database on hand for operational planning and execution. In reality, such an idea is not feasible for several reasons. First, creation of a database to include all (or even most) potential sites would most likely be cost prohibitive. Second, potential future enemies would certainly balk at the idea of a US site survey for combat support operations on their sovereign territory. Third, the value of such a prepackaged database would diminish over time. Seasonal climatic changes, precipitation, animal migratory behavior, and human activities are but a few of the variables that would require frequent updates. Therefore, analytical tools must be in place to respond quickly to changes in the prosecution of the battle. Identification of several potential suitable landing sites based on the existing disposition of forces and scheme of maneuver will provide the commander more flexibility in operational decision making.

Cargo-Handling Capability

To exploit the advantages gained through austere airfield operations, cargo delivery systems must be both fast and efficient. The ultimate measure of merit in sustainment operations is safe, timely delivery. Resupplying AAN forces in dispersed locations will present significant challenges for future theater airlift forces. Aircrews can expect to service several destinations on a given mission, requiring more time in a hostile environment. Rapid loading and unloading of cargo at each destination will minimize ground time, when aircraft potentially will be most vulnerable. "Austere and hastily prepared landing sites in the future will not have the right amounts and

types of traditional materials handling equipment needed to unload the ATT [Advanced Theater Transport], and unloading operations in exposed forward sites must be accomplished quickly in order to reduce risks to the ATT, its crew, and the ground unit receiving the cargo."[16]

To accomplish the mission in austere locations, the airlift platform must have some level of autonomous cargo-handling capability. In this case *autonomy* means accomplishing the mission without the use of external materials handling equipment (MHE). This action implies the ability to drive the cargo off the aircraft, push it off, or use organic aircraft equipment to accomplish the offload. The same capabilities will be required for onload, as the future theater airlifter will be used as a maneuver element as well as a sustainment provider.

Three features of the AAN battlespace combine to increase the requirement for flexibility. These features are speed of operations, fluidity, and reduced sustainment requirements for the AAN Battle Forces. Fewer requirements for sustainment increase the potential for one aircraft to carry cargo for multiple destinations. The speed and fluidity of the environment can drive changes in destination priorities in flight. If such a scenario unfolds, the airlift platform must be able to rapidly reposition cargo to allow the quickest offload at the updated destination.[17]

Situational Awareness

The ability to operate effectively in the nonlinear battlespace of the future is of little value without the situational awareness to guide when, where, and how to adapt to the changing environment. The required capability for theater airlift directly correlates with the concept of gaining information dominance. The technologies the AAN is seeking (e.g., advanced information processing, distribution, and display) will directly support the information requirements for the theater airlift platforms. The airlifters will need to be plugged into the information dominance system where "speed and quality of decision making for current and subsequent operations are the ultimate outputs."[18] This integration would help the entire logistical system from tooth to tail.

The joint total asset visibility (JTAV) concept currently being pursued by the Joint Staff seeks the ability to track aircraft location and status from the point of origin to the offload destination.[19] Real-time information on equipment status will also

increase flexibility for commanders in the conduct of operations. Such information will facilitate timely redirection of forces and combat support, allowing the AAN forces to retain initiative.

For the aircrew, being connected to the AAN information network will increase responsiveness and enhance survivability. With an accurate picture of the battlespace, crews can respond to orders to divert more effectively. Through ingress and egress threat analysis, they will have a greater capability to plan the best way to deliver the goods in a safe and timely manner. "Admittedly, the attainability of such complete situational awareness is subject to the same caution as the AAN's dependence on information dominance. The Institute for National Strategic Studies (INSS) 1998 Strategic Assessment states that "building flexibility into a software-dominated system is complex, and its ramifications can only be discovered by experience."[20]

If airlift forces can achieve such situational awareness, the reward will be the luxury of conducting operations under relative certainty and a high potential for an inexpensive victory. On the other hand, if such heightened awareness eludes the airlift forces, the prospect of operating in hostile territory necessitates improved defensive capabilities to enhance survivability.

Defensive Systems

With the exception of special mission variants, airlift platforms have until recently been largely devoid of defensive systems. One reason for this is that in the last half of the twentieth century, theater airlift doctrine evolved within the cold war paradigm. The role of theater airlift was to move the cargo from the strategic hub to destinations throughout the theater in which it was assigned. During combat operations, such lift would deliver cargo near the forward line of own troops, but in friendly territory. Any operations beyond the FLOT would be supported by intense suppression of enemy air defenses (SEAD).[21] Despite this doctrine, C-130 aircrews in Vietnam were subjected to enemy fires, suffering substantial damage and demonstrating the inadequacy of theater airlift doctrine for unconventional conflicts.[22] It was not until the "direct delivery" capability of the C-17 was promised that fleet-wide defensive systems were given significant attention. Even then, it was determined that "sustainment missions will routinely go

as far forward as the brigade rear area (BRA)," 20 to 40 kilometers from the FLOT.[23]

The need for defensive systems for theater airlift platforms to support the AAN is self-evident. Maneuver and resupply missions will have to be flown unescorted. The notion of diverting SEAD assets from strike operations to enhance maneuver or sustainment is a violation of economy of force.[24] To support the AAN, theater airlift aircraft will require onboard systems to detect, avoid, and defeat enemy antiair threats.

Developing defensive systems for airlift aircraft presents unique challenges. Many of the characteristics that enhance the operational airlift capability degrade aircraft survivability. The ability to deliver a large quantity of troops and materiel increases the size of the cargo compartment, making the aircraft easier to spot. Larger aircraft also carry with them more stringent structural loading limitations, which translates into less maneuverability. Turbofan engines are used to deliver the thrust required for increased payloads and achieve fuel efficiency. These engines produce the majority of their thrust through their large fans.[25] These fans take time to spool up,[26] which also limits responsiveness and maneuverability. The challenge for the future will be to develop defensive systems that can enhance survivability without significantly degrading mission effectiveness.

Theater airlift has been an integral part of land force operations in numerous campaigns. Its use as a combat maneuver element has not been significantly tapped, and primary airborne operations have involved troop insertion and resupply. However, one particular operation in World War II had several characteristics in common with AAN projected operations as they relate to airlift. That effort, known as Operation Thursday, involved autonomous operations behind enemy lines and a substantial theater airlift role.

Operation Thursday—Burma, 1944

Throughout 1941 Japanese ground forces had marched across much of Southeast Asia with alarming speed. The fall of Burma in the spring of 1942 bore potentially grave consequences for the Allies. Japan was threatening to isolate China from the rest of Asia and capture India, the "jewel of the British Empire."[27]

The terrain in Burma was difficult, and ranged from mountains to dense jungle. In 1943 a British general, Orde Wingate—taking advantage of this terrain—planned a guerrilla warfare-style infiltration deep behind enemy lines. Resupplied by air, the infiltrating forces were to disrupt or destroy enemy lines of communication and cause general disarray.[28] For various reasons, the campaign was only marginally successful; however, it did demonstrate to the Allied leadership that "properly trained and organized groups supplied from the air, and thusly independent of normal supply lines, could operate in the jungle far behind enemy lines."[29] In addition, the 1943 expedition allowed General Wingate's troops to discover clearings in the jungle that could be made suitable for airfield operations. This would be critical for the infiltration campaign that followed in 1944.[30]

Operation Thursday, as the aerial invasion was called, was a much larger effort than its predecessor and relied heavily on airlift for troop insertion and substantial aerial resupply. Gliders towed by C-47 aircraft carried the initial forces to the designated airfield locations to prepare the areas for takeoff and landing operations. Though such problems as towing rope failures, unexpected turbulence en route, and unexpectedly harsh landing conditions degraded mission effectiveness, the results of the initial insertion were unprecedented. "All told, 539 men, 3 animals, and 65,972 pounds of stores had been safely put down, including such heavy items as bulldozers and lighting apparatus, and within twenty-four hours an airstrip, 300 by 5,000 feet, was cleared and prepared."[31]

Operation Thursday lasted from 5 March to 17 May 1944, although a heavy sustainment effort continued for an additional four months.[32] The overall strategic success of the infiltration is subject to debate, but the impact of the four airlift capabilities developed in this chapter was apparent in the operation.

Austere Operations. Operation Thursday taught a painful lesson on the importance of surveying prospective austere sites for suitability. The relatively inviting appearance of grassy surfaces hid the dangers of the water buffalo holes beneath them. Consequently, uneven surfaces claimed the landing gear of the first arriving gliders, creating an inability to clear the landing zone and causing subsequent gliders to crash into the immobile hulks.[33]

Once cleared and prepared, the austere airfields provided distinct advantages over airdrop resupply operations. One ad-

vantage, which was of great importance, was the ability to evacuate casualties from the area. C-47 aircraft evacuated 914 casualties during the month of April.[34] Air evacuation greatly increased combat effectiveness and morale when compared to Wingate's first expedition in which "about 30 percent of the original force were casualties; most of the wounded and exhausted were of necessity left behind."[35] Cargo delivery by landing was also much more efficient than airdrop. "Transports could carry a heavier load for dropping than for landing, but parachutes and packing weighed more than enough to offset the increase in gross load . . . Over a period of more than a few days airdrop delivery could not be maintained at the same rate as delivery by landing."[36]

Cargo-Handling Capability. In the 10 weeks in support of Operation Thursday, C-47 transports flew more than one thousand sorties, hauling some 13,000 troops, two thousand mules, and 528 tons of supplies throughout Burma.[37] This demanded substantial cargo-handling efficiency. In fact, at the main forward operating location, known as Broadway, the average total time on the ground was 20 minutes.[38] Even though the average load was only 4,750 pounds, 20 minutes was still an impressive aircraft turn time.[39]

One specific challenge was the requirement to haul mules, as they were the prime means of moving heavy equipment on the ground. This challenge was answered by the construction of bamboo stalls in the cargo compartments of the C-47s. Muleteers accompanied the mules on transport flights and trained them to walk up the cargo ramp to improve efficiency and speed in loading operations.[40]

Situational Awareness. The tactics of night operations brought with them an inherent loss of situational awareness. If operations had been conducted during daylight, the obstacles encountered by the initial gliders might have been avoided, enabling the ground mobility required to prepare for the second wave. Several airdrop missions were also unsuccessful because the drop zones were difficult to distinguish at night, and the ground forces were not enthusiastic about lighting signal fires that would attract snipers.[41]

One example of "just-in-time intelligence" that increased situational awareness occurred just before the launch of the initial gliders. An air commando photographic officer had flown over a second prospective site named Piccadilly. The photographs (taken without consent of General Wingate, who

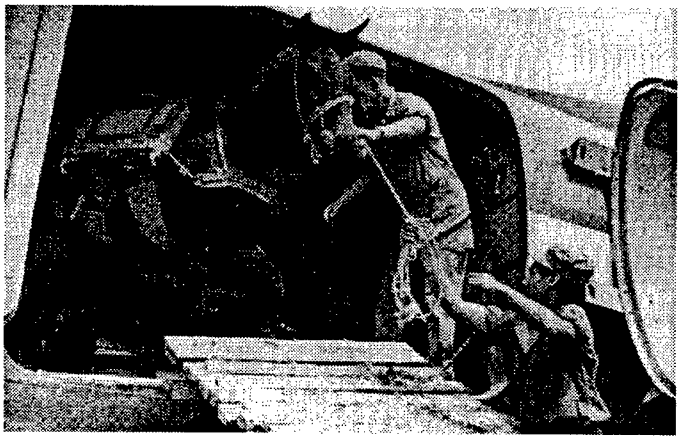

Source: *Joint Force Quarterly,* Summer 1996, 102.

Unloading the "Prime Mover" from a C-47

wanted to preserve operational security) revealed that large trees had been dragged across the landing zone, rendering it unusable.[42] This timely information led to the abandonment of Piccadilly as a forward airfield and may have spared significant casualties.

Defensive Systems. One of the reasons the transports flew at night was because of lack of fighter escort. This tactic proved very successful in preserving the C-47s, with only one seriously damaged throughout the resupply operations.[43] Another factor contributing to aircraft survivability was that the operations were conducted deep behind enemy lines, and the majority of the Japanese fighters were focusing on the skies near the main effort. A somewhat obvious observation, but one that will have significant implications for future Army After Next airlift support, was that the majority of the damage inflicted on the transports came from small arms and automatic weapons fire around the airfields and drop zones.[44]

The airlift operations in support of Operation Thursday provide several lessons for future employment in hostile environments. However, it is important not to take too much from history. The primary airlift missions in Burma were insertion and resupply. These will be important in future conflicts, but the airlift role will be expanded to include providing mobility for substantial AAN Battle Forces and equipment. The expanded

role will require innovative forward thinking as well as learning from history.

In summary, the AAN will provide unprecedented challenges for USAF theater airlift systems. The logistics principles of *flexibility* and *survivability* will become more important, and the next generation airlift system must be designed with these principles in mind. To deliver on this requirement, future theater airlift platforms must maximize four capabilities of increasing importance in the twenty-first century battlespace: austere operations, cargo-handling capability, situational awareness, and defensive systems.

Notes

1. Joint Publication (JP) 4-0, *Doctrine for Logistic Support of Joint Operations*, 27 January 1995, I-1.

2. Daniel Bourgoine, "AAN FY98 Insights Brief," 24 February 1999, slides 7 and 8; on-line, Internet, 28 February 1999, available from "Briefings" at http://www.tradoc.army.mil/dcsdoc/fbdaan/aanframe.htm. Also see *Knowledge and Speed: Battle Force and the US Army of 2025, The 1998 Annual Report on the Army After Next Project to the Chief of Staff of the Army*, US Army Training and Doctrine Command (TRADOC), (Fort Monroe, Va.: TRADOC, 1998), 15. Hereinafter referred to as *Knowledge and Speed 1998*.

3. Air Force Doctrine Document (AFDD) 2-6, *Air Mobility*, 24 February 1999, 50; on-line, Internet, 14 March 1999, available from http://www.hqafdc.maxwell.af.mil/Library/Doctrine/afdd2-6.pdf.

4. JP 4-0, II-1–II-4.

5. Giulio Douhet, *Command of the Air* (1942; reprint, New York: Coward-McCann, Office of Air Force History, 1983), 53.

6. George F. Hunter, "An Analysis of V/STOL Heavy Lift Logistics for the 1970's," Air Command and Staff College (ACSC) student paper (Maxwell AFB, Ala.: ACSC, June 1968), 46.

7. Roy C. LeCroy, "Implications of Changing Combat Doctrine and Evolving Threats on Future Tactical Airlifter Requirements" (Maxwell AFB, Ala.: Air War College, 1985), 23.

8. North Atlantic Treaty Organization, "Progress in Military Airlift" (Flight Mechanics Panel Symposium, France: Advisory Group for Aerospace Research and Development, 1990), 3-1; R. E. Helmeth et al., "Analysis of Tactical Transportation: Progress and Challenges" (paper for Defense Systems Management College, 1988), 10-1; and Boeing, *Advanced Theater Transport Mission Analysis Study, 1987*.

9. "Aerospace Source Book: Rotary-Wing Outlook/Specifications," *Aviation Week & Space Technology*, 11 January 1999, 78.

10. Ibid.

11. T. D. White, "V/STOL Aircraft Characteristics Affecting Behavior of Supporting Surfaces" (US Army Materiel Command, July 1967), 8–10; and

R. W. Prouty, *Helicopter Aerodynamics* (Potomac, Md.: Phillips Publishing, 1985), 87.

12. TRADOC Pamphlet 525-66, *Future Operational Capability TC 97-004: Super Short Takeoff and Landing (SSTOL)*, n.d., n.p.; on-line, Internet, 6 March 1999, available from http://www-tradoc.army.mil/tpubs/pams/p525-66e.htm.

13. This threat is exacerbated at higher gross weights. The increase in downward force caused by the added weight, coupled with the increase in landing speed required for heavier gross weights increases the sheer stress on the landing gear when striking an obstacle.

14. During dirt runway performance testing in early 1997, a C-17 flight-test crew landed short of the semiprepared surface. Though the area five hundred feet prior to the landing zone was inspected for obstacles, the aircraft struck a boulder protruding less than one foot above the surface in the grassy area. The result was damage to the right main gear assembly, grounding the aircraft for more than three months and evoking a "Class A" accident investigation. For more information on the accident, contact the Air Force Flight Test Safety Office, Edwards AFB, California.

15. B. K. Hough, *Basic Soils Engineering* (New York: Ronald Press, 1957), 384.

16. Jeffrey Record, *Determining Future U.S. Tactical Airlift Requirements* (Washington, D.C.: Pergamon-Brassey's International Defense Publishers, 1987), 36.

17. This does not suggest repositioning cargo in flight, although that proposition cannot be totally ruled out. Repositioning cargo in flight has traditionally been taboo, except in emergencies. One reason is that the possibility of a "loose platform" in the cargo compartment could potentially shift the aircraft center of gravity to a point that would threaten controllability. With the advent of electronic flight controls, this danger might be mitigated. Another danger is the possibility of a "hung load" in which the aircraft acceleration in any of the three axes during repositioning can jam the load in place. This could jeopardize control during landings, and hamper onload/offload operations.

18. TRADOC, *Knowledge and Speed 1998*, 24.

19. Joint Chiefs of Staff, J-4, *Information Fusion*, J-4 Projects, n.d., 2; on-line, Internet, 6 March 1999, available from http://www.dtic.mil/jcs/projects/foclog/info-fus.html.

20. Institute for National Strategic Studies, "Adaptive Forces," *1998 Strategic Assessment: Engaging Power for Peace*, n.d., n.p.; on-line, Internet, 6 March 1999, available from http://www.ndu.edu/inss/sa98/sa98ch15.html.

21. John A. Skorupa, *Self-Protective Measures to Enhance Airlift Operations in Hostile Environment* (Maxwell AFB, Ala.: Air University Press, 1989), 33.

22. Charles E. Miller, *Airlift Doctrine* (Maxwell AFB, Ala.: Air University Press, 1988), 321–26.

23. Ibid.

24. JP 3-0, *Doctrine for Joint Operations*, 1 February 1995, A-1.

25. C-17 engine information at "Engine Gallery—F117-PW-100," n.d., n.p.; on-line, Internet, 10 March 1999, available from http://www.pratt-whitney.com/engines/gallery/f117.html.

26. This phenomenon is quite different from turbojet engines in which advancing the throttle increases fuel flow to the combustion chamber that directly produces the engine thrust. "Spooling up" involves the time from throttle advancement to increasing fuel flow to increased energy in the combustion chamber, *and* the time it takes to translate that energy to rotating the large fan. Due to principles of momentum, this time is greatly increased at low engine power (low fan speeds).

27. Herbert Mason, Randy G. Bergeron, and James A. Renfrow, *Operation Thursday, Birth of the Air Commandos* (Washington, D.C.: Air Force History and Museums Program, 1994), 1.

28. Lee Bowen et al., *USAF Airborne Operations: World War II and Korean War* (Washington, D.C.: USAF Historical Division, 1962), 30.

29. Denny Riley, "Airborne Invasion of Burma, Spring, 1944" (master's thesis, University of Oklahoma, 1965), 21.

30. Bowen et al., 30.

31. Wesley Craven and James Cate, *Army Air Forces in World War II*, vol. 4, *The Pacific: Guadalcanal to Saipan, August 1942 to July 1944* (1949; new imprint, Washington, D.C.: Office of Air Force History, 1983), 505.

32. Bowen et al., 38.

33. Joe Taylor, *Air Supply in the Burma Campaign* (Maxwell AFB, Ala: USAF Historical Division, Research Studies Institute, Air University, 1957), 68.

34. Ibid., 72.

35. Ibid., 14.

36. Ibid., 137.

37. Bowen et al., 40.

38. Riley, 75.

39. Ibid., 74.

40. Ibid., 95.

41. Ibid., 92.

42. Craven and Cate, 505.

43. Taylor, 72.

44. Ibid., 138.

Chapter 4

Current Theater Airlift Capabilities

Every tool carries with it the spirit by which it has been created.

—Werner Karl Heisenberg

Given the capability requirements for future theater airlift derived in this paper, it is useful here to identify the capabilities and growth potential of current systems. Such an analysis will illuminate capability gaps and pave the way for assessing future concepts to support the Army After Next. To keep the discussion relevant to the central argument, this chapter evaluates current systems against the criteria of austere operations, cargo-handling capability, situational awareness, and defensive systems.

Today's Air Force airlift fleet consists of the C-5, C-17, C-141, KC-10, KC-135, and C-130 aircraft. The capability analysis in this section is limited to the C-130 and C-17 aircraft. The C-5, KC-10, and KC-135 are excluded because they support the strategic lift requirements. The C-141 conducts theater operations to include aerial delivery; it is not included in this analysis because it is scheduled for retirement by 2006, long before the AAN concept is realized.[1] The performance differences between the C-130E/H and the C-130J variant are significant enough to warrant a separate analysis. The analysis also includes the CH-47 and the V-22, two non-Air Force platforms with substantial lift capability. Table 1 presents a summary of the capabilities evaluation.

C-130E/H

First rolling off the assembly line in 1961, 390 C-130E aircraft were produced for the USAF. Twelve years later, the improved C-130H took its place, and 315 of these models were produced before the assembly line closed in late 1996.[2] The primary change with the "H" model came in the form of more powerful engines, increasing the cruise speed from 280 to 300

Table 1

Current Theater Airlift Platform Capabilities

A/C Type	Austere Operations				Cargo Handling	Situational Awareness	Defensive Systems
	Runway required (ft)* on prepared/unprepared surface To carry cargo load (lb)			Other			
	20,000	39,000	100,000				
C-130 E/H	1,750/ 2,100	2,650/ 2,650	N/A	GPS retrofit in progress	6 pallets, external MHE required	GPS retrofit, 5 person crew	Radar warning and CM, IRCM
C-130J (J-30)	1,400/ 1,700	2,400/ 2,400	N/A	HUD, GPS	6 (8) pallets, external MHE required, ECHS	GPS, HUD, digital moving map, glass cockpit	Radar warning and CM, IRCM
C-17	1,560/ 1,640	1,780/ 1,890	2,490/ 2,800	HUD, GPS	18 pallets, outsized cargo, external MHE required	GPS, HUD, glass cockpit, AFMSS	Radar warning, IRCM
CH-47	N/A	N/A	N/A	V/TOL	14 K internal capacity, 26K external (not simultaneous)	databus upgrade possible	Radar warning and CM, IRCM, 3 gun mounts
V-22	N/A	N/A	N/A	V/TOL, GPS	20K internal capacity, 15K external (not simultaneous)	GPS, HUD, glass cockpit, FLIR gun mounts	Radar warning and CM, IRCM NBC protection,

Legend:

AFMSS—Air Force Mission Scheduling System
CM—countermeasures
ECHS—enhanced cargo-handling system
FLIR—forward-looking infrared
GPS—global positioning system
HUD—head up display
IRCM—infrared countermeasures
MHE—materials handling equipment
NBC—nuclear, biological, and chemical

*Runway required data is based on the more restrictive value between takeoff and landing ground roll. In operations, takeoff distance is increased by the requirement to clear a 50-foot obstacle; for comparative integrity with the advanced theater transport contractors' runway performance, ground roll is used here. Also note that on the C-130E/H and C-130J data, the data is the same for prepared and unprepared at the heavier weights. This is because the C-130 performance manuals compute the degradation on semiprepared runways as a function of runway condition reporting numbers, which do not affect takeoff roll. C-17 numbers are based on actual and modeled data with respect to increased rolling friction at degraded runways. This affects takeoff roll, and the C-17 numbers reflect this.

knots. The better power plants increased takeoff and landing performance and are used to represent the C-130E/H "family."

Austere Operations

The C-130E/H can operate with payloads of 25,000 pounds;[3] it also operates through runways as short as 1,750 feet.[4] Increasing to the maximum payload of 39,000 pounds increases the runway requirement to 2,650 feet. The aircraft has the capability for operations on semiprepared surfaces; however, this increases the runway requirements even further, to 2,100 feet and 2,650 feet for the respective loads.[5] The C-130E/H can airdrop up to 64 paratroopers, as well as equipment ranging from container delivery system (CDS) bundles to heavy platforms such as the 42,000-pound Sheridan light armored vehicle.[6] This aircraft can also perform precision aerial delivery through the low altitude parachute extraction system (LAPES).[7] In Vietnam, this capability was very useful for the sustainment of Khe Sanh after the 1968 Tet offensive.[8]

Cargo-Handling Capability

The C-130E/H can carry up to six standard 463L logistics pallets (five for airdrop since the ramp pallet position at the rear of the aircraft is unavailable for drop operations) and conducts loading through the tail of the aircraft.[9] It requires the same MHE of its strategic brethren. Forklifts and "K" loaders (so named for their cargo weight capacity, e.g., 40 "K" for 40,000-pound capacity) handle the palletized cargo. The C-130 possesses a combat offload capability for palletized cargo. The procedure consists of releasing the restraint devices and locks on the load, accelerating, and allowing the aircraft to advance and the cargo to roll off onto the ramp. This procedure is available for palletized cargo up to 15,000 pounds.[10]

Situational Awareness

Current flight instrumentation is relatively primitive by today's standards. Currently, the navigation system on most

aircraft does not integrate with the global positioning system (GPS), relying partially on inertial navigation systems for guidance. The radar is suitable for weather mapping and limited identification of major geographic features. The aircraft systems require a flight engineer for operation and monitoring. Most operations require a five-person crew.[11]

Defensive Systems

The defensive systems on many of the aircraft consist of the AAN active radar missile warning system (MWS) to detect both radar and infrared (IR) threats.[12] In addition, the aircraft are equipped with countermeasures in the form of chaff, flares, and the ability to carry electronic countermeasure (ECM) jamming pods.[13] The C-130 is also equipped with armor-protected seats. In addition, flak curtains are available for placement in the lower forward windows.

Growth Potential

The major objectives Air Mobility Command (AMC) is pursuing with the C-130E/H fleet reside in the areas of situational awareness and defensive systems. Currently, there are retrofit operations under way to integrate GPS into the navigational systems.[14] This will not only aid the crew in situational awareness but will improve airdrop accuracy at austere locations. Defensive systems are being improved by the installation of the ALR-69 radar warning receiver which will provide a more robust threat identification.[15] These retrofit operations will support a very elaborate project being undertaken by AMC to bring all the C-130 aircraft prior to the "J" model to a single standard. This project has backing from the highest levels, as indicated in the following passage from Gen Charles T. Robertson Jr., Commander, AMC. "*I say again: we're going to create a single model out of the mix:* an aircraft we call the C-130X. The modifications will run the gamut, from electrical system upgrades to glass cockpits with flight management systems and NVG lighting upgrades . . . to, in the final phase of our three phase plan, a common engine, APU, and any structural repairs required" (emphasis in the original).[16]

C-130J (and J-30)

The introduction of the C-130J into the fleet represents a leap ahead in technology far greater than any obtained by its predecessors. In fact, the changes in propulsion, avionics, and cargo handling that much of its operational support is based upon will require training and logistics infrastructure separate from the rest of the C-130 fleet.[17] To avoid redundancy, this section will only elaborate on the changes from the current C-130 fleet that impact the evaluation criteria. The C-130J-30 is a "stretch" version, with 15 feet added to the fuselage.[18] For the purpose of this analysis, the capabilities of the C-130J-30 are the same as the smaller version unless stated otherwise.

Austere Operations

The more powerful, electronically controlled engines and more efficient propellers combined to significantly improve takeoff and landing performance. This increase in thrust at low speed brought with it the potential for control problems in the event of an engine failure. This was overcome by the development of an automatic system that integrates the electronic engine control with aircraft control parameters to provide increased performance and control.[19] On a prepared surface, operating with cargo weights of 25,000 and 39,000 pounds requires runway lengths of 1,400 and 2,400 feet respectively. Similar operations on unprepared surfaces will require 1,700 and 2,400 feet.[20] The enhanced cargo-handling system (ECHS) interfaces with the onboard computer to provide a more accurate airdrop capability.[21]

Another performance enhancing system that will aid in austere operations is the head up display (HUD). This system provides the capability to control aircraft performance and navigate while retaining the ability to scan the horizon. More important for austere operations, however, is the ability to establish a visual approach path without the use of external navigation aids. By maneuvering the aircraft to overlay the desired glide path parameters on the appropriate aim point, aircrews can perform more accurate landings and avoid wasting valuable landing surface.

Cargo-Handling Capability

The ECHS aids the loadmaster in cargo-loading operations. The automatic locking devices and system status monitoring capability provide information essential for rapid and efficient operations. The floor is redesigned to allow rapid configuration changes for palletized cargo or rolling stock. The C-130J-30 has two additional pallet positions for carrying cargo, but its increased structural weight actually decreases the payload capacity by 2,400 pounds.[22]

Situational Awareness

The C-130J is equipped with a state-of-the-art avionics suite. The navigation system contains an embedded GPS capability and a digital autopilot. The HUD will also greatly aid in situational awareness, allowing the crew to monitor performance and flight progress while retaining the ability to scan their surroundings. The Northrop Grumman AN/APN low power color radar is capable of supporting digital moving map imagery.[23] This translates into a capability to present known or suspected surface-to-air threats, overlay navigation information, and adjust ingress and egress routes in hostile areas.

The potential exists for the C-130J to *decrease* situational awareness from the earlier versions. The C-130J crew complement will be reduced from the previous aircraft by 40 percent. Automation can perform several tasks formerly done by crew members; but in a high workload environment, task saturation is an issue worth considering.

Defensive Systems

The C-130J models will enter service with all of the defensive systems described for the C-130E/H. The only real advantage these newer systems will possess is a deeper integration into the overall system. The situational awareness advances previously discussed will enhance the effectiveness of the defensive systems by offering the potential to avoid their use through threat avoidance.

C-17

The C-17 is the most capable airlift aircraft developed to date. Technological advances in flight control systems and structural design provide the aircraft with the capability to accomplish both the inter- and intratheater airlift mission very effectively.

Austere Operations

One of the main design features that gives the C-17 the capability to operate at high gross weights into small airfields is known as "blown lift." This concept involves positioning high-lift devices such as flaps in such a manner that jet thrust is applied to them at low speeds, offsetting the reduction in airflow across the wing.[24] The C-17 can deliver the 25,000- and 39,000-pound loads into a paved surface of 1,560 and 1,780 feet, respectively.[25] Delivering the same cargo into unprepared surfaces requires 1,640 and 1,900 feet.[26] The C-17 has the ability to deliver significantly more cargo than its C-130 counterpart. For example, it can deliver equipment such as the 50-ton M60 tank into prepared airfields as small as 2,490 feet and unprepared surfaces of 2,800 feet.[27] As with the C-130J, the HUD in the C-17 aids greatly in precision landings on airfields with no navigational aids. The C-17 has a robust airdrop capability, able to deliver up to 102 paratroopers. The C-17 can also airdrop single platforms of 60,000 pounds and deliver a total of 110,000 pounds of equipment on a single pass across the drop zone.[28]

Cargo-Handling Capability

The wide body of the C-17 accommodates outsized cargo and can carry two rows of palletized cargo. Loading operations are conducted solely through the aft end of the cargo compartment. The cargo floor does not possess the capability to shift palletized cargo laterally. The automation in the cargo compartment greatly reduces loadmaster workload. Standard external MHE of forklifts and "K" loaders are required for palletized cargo operations. Traditional methods of tying down cargo with fore and aft restraints are still required in the C-17.

Combat offload procedures similar to those described for the C-130 permit the offload of 85,000 pounds of cargo in less than 450 feet.[29]

Situational Awareness

The C-17 is equipped with state-of-the-art avionics, including GPS-aided navigation, glass cockpit design, and onboard computers that aid in mission planning and operations. Improved mission planning systems—such as the Air Force Mission Scheduling System (AFMSS)—provide aircrews the opportunity to preplan a mission on a personal computer, include pertinent data specific to their mission, and upload it for display.[30] Though the system does not provide real-time updates, display information such as projected surface-to-air threats will enhance situational awareness.

Defensive Systems

The C-17 defensive suite is not as robust as its C-130 counterpart. It possesses the AAR-47 MWS and the ALE-47 countermeasures dispense set (CMDS) to respond to IR missile threats.[31] These systems do not respond to radar threats. Logic dictates that the development of a system to counter radar threats is likely to be untenable, given the size of the C-17 radar cross section. Each crew position is provided armor protection against ordnance up to 12.7 millimeter armor piercing incendiary rounds.[32]

CH-47D

This tandem rotor CH-47 transport helicopter aircraft rivals the C-130 in its longevity, making its maiden test flight in 1961.[33] The CH-47D represents the newest and most capable variant. First delivered in 1981, 481 of the helicopters were built.[34]

Austere Operations

As with any VTOL aircraft, the airfield requirements for the CH-47D are minimal. For landing, the distance required is slightly longer than the 99-foot aircraft length to allow for clearance.[35] Because of its capacity for external carriage,

some operations may be done from a hover and require less surface. The absence of a landing roll requirement also increases the options available for landing, as the consequences of touching down on uneven ground are much less catastrophic.

Cargo-Handling Capability

Three hooks mounted on the belly of the CH-47 provide the capability to lift up to 26,000 pounds externally. Internally, the maximum carrying capacity is 14,000 pounds,[36] including up to 50 troops (33 fully equipped) or two high mobility multipurpose wheeled vehicles (HMMWV).[37] The Army is also considering upgrades to the cargo floor, which will allow rapid reconfiguration for different load types.[38]

Situational Awareness

The avionics suite is basic, with dual displays and flight directors. The Army is considering a proposal for an avionics upgrade to include a digital cockpit and a central databus. This will facilitate "updated communications and navigation, enabling the Chinook to meet U.S. Army Force XXI Battlefield requirements."[39]

Defensive Systems

Having been designed to operate very near hostile fire, the CH-47 contains a robust defensive suite. As with the previous aircraft, it contains the AAN-47 MWS, as well as chaff and flare dispensers and jamming equipment. In addition, the helicopter contains provisions for three machine guns or miniguns.[40] This offensive capability provides an increased deterrent and enhances survivability.

V-22

The V-22 Osprey represents a great technological accomplishment. Its tilt-rotor design provides the combination of both speed and VTOL. Having waded through funding cutbacks and technical challenges since its full-scale develop-

ment initiation in 1986, the V-22 was scheduled for initial operational capability (IOC) in 1999.[41]

Austere Operations

The V-22 enjoys the same advantages as the CH-47 in this area. The surface area required is marginally smaller, needing only to accommodate the 84-foot aircraft width.[42] As with the CH-47, hover operations will potentially reduce this requirement further.

Cargo-Handling Capability

The maximum internal payload for the V-22 is 20,000 pounds, while external capacity is limited to 15,000 pounds.[43] The cabin can carry 24 troops, and the cargo floor is equipped with rollers to handle palletized cargo and a winch with a 2,000-pound pulling capacity.[44]

Situational Awareness

The avionics suite is state of the art, with GPS-aided navigation systems and onboard mission computers. In addition, the navigation displays have the ability to overlay digital moving map images.[45] The digital map is presented through an integration of a geographic database and the GPS to provide information on terrain features and potential threats. Forward-looking infrared (FLIR) radar is also available for navigation during low visibility.[46]

Defensive Systems

The V-22 carries the AN/AAR-47 MWS, along with chaff and flares. Additional defensive features include provisions for nose and gun mounts and self-sealing fuel tanks. The V-22 is the only aircraft in this analysis designed with an air-filtered cockpit to provide protection from nuclear, biological, and chemical (NBC) threats.[47]

Coming Up Short

Each aircraft described in this chapter possesses some satisfactory capabilities for integration into the Army After Next.

The C-130 offers a robust defensive suite and the ability to deliver medium cargo loads into relatively small fields. The C-130J retains all of the characteristics of its older counterpart and adds value in the areas of runway performance, situational awareness, and in cargo handling (marginally).

The C-17 offers a leap in performance, cargo weight, and cargo type with the addition of outsized cargo and battle tank capacity. The desire for a transport that could fulfill both the strategic and tactical mission led to an increase in the size of the C-17. In the tactical airlift role, this resulted in an airplane with a reduced defensive capability when compared to the C-130 models.

The VTOL aircraft provide exceptional austere operations capability, but this comes at the cost of payload capacity. Though not analyzed within the capability criteria, the increased reach available with the V-22 tilt-rotor technology represents a substantial increase in flexibility over the medium-lift assets it will replace.

When all is said and done, the capabilities that exist within today's theater airlift force are inadequate to support the AAN vision. None can meet the SSTOL/payload requirement. At this point only the C-17 has the cargo capacity to carry fighting vehicles. The extensive cargo-handling equipment required to process cargo is too cumbersome to facilitate minimum ground times at austere locations. Situational awareness aids do not provide a current picture of the environment, and crews are reliant on radio communications for updates.

In general, the trend toward the required capabilities of the twenty-first century airlifter appears healthy. The C-17 demonstrates the technological advance fitting of its relative operational infancy. The biggest detriment to a greater advance by the C-130J is the fact that it is trapped in the body of a 45-year-old aircraft design. The V-22 brings a tremendous capability to its niche mission. However, that niche mission does not support the AAN vision as it relates to operational maneuver and sustainment.

The area that has perhaps benefited the most from recent technology is situational awareness. Upgrades in navigational accuracy, HUDs, mission computers, and cockpit displays producing imagery from massive databases provide the crew with

timely information. Conversely, defensive systems for cargo aircraft have advanced relatively slowly despite technological advances. Perhaps this is because in the cost-benefit analysis, the very size and characteristics of a cargo aircraft drive its design to something that is a relatively easy target. That size and relative lack of maneuverability also make the rudimentary countermeasures relatively easy to defeat from the air.[48]

As the caretaker of the Air Force airlift fleet, AMC is currently taking steps toward realizing some of the future capabilities identified in this paper. Each year, AMC provides an updated air mobility master plan (AMMP) that provides information on vision and strategy to support future requirements. One capability being pursued is real-time-in-the-cockpit (RTIC) information. "The RTIC is a situational awareness capability to receive, process and display real-time and near-real-time information overlaid on photos and charts. The technology includes flight following, two and three-dimensional threat displays, terrain perspective views, and mission rehearsal."[49] The technology for RTIC has been in existence for several years and is being designed into the F-22. Such a system on airlift platforms will provide the architecture required for integration and display of the AAN battlespace picture.

The AMMP also addresses modernizing MHE. These improvements are in the form of upgrade and standardization of the current "K" loader fleet. Though such advances are limited by the configurations and offload capabilities of the current platforms, the AMMP concedes that "changes in user profiles, aircraft configurations, and expected operating parameters will likely make it necessary to identify and procure follow-on and replacements for all loader types."[50] Defensive systems initiatives are limited to the fleet-wide upgrade to the more advanced AL-69 radar warning receiver and retrofit of any applicable aircraft with chaff and flare capability.[51]

Between existing capabilities and proposed improvements, AMC is providing a theater airlift system as robust as the airframes will allow. It is important to remember that the four desired capabilities identified for analysis were chosen because they support the increasingly important logistics principles of *flexibility* and *survivability*. Though the current system supports these principles in today's environment, the operational

concept for theater airlift to support the AAN expands both principles' scopes.

Flexibility will include the capability to operate at several locations throughout the battlespace. Current runway requirements and the need for significant external cargo-handling equipment inhibit such flexibility. Survivability on the ground will become a greater concern in supporting AAN operations, as the onload/offload mission will presumably be conducted in hostile areas. Current cargo-handling systems are not responsive enough to enhance survivability on the ground. The situational awareness enhancement of an RTIC system is the one capability that in and of itself will accommodate both flexibility and survivability, perhaps making it the greatest current theater airlift contribution to the AAN vision.

There is clearly a gap between the AAN concept and the theater airlift system to support it. TRADOC Pamphlet 525-66, *Future Operational Capability,* provides several glaring shortfalls.[52] To enhance the future joint war-fighting effort, the theater airlift force must develop its capabilities with the support of the AAN in mind. It is time to bridge the gap.

Notes

1. Charles T. Robertson Jr., "Keynote Address to the Airlift/Tanker Association," 24 October 1998, n.p.; on-line, Internet, 6 March 1999, available from http://public.scott.af.mil/hqamc/speeches/ata_98.htm.

2. Paul Jackson, ed., *Jane's All the World's Aircraft 1997–98* (Alexandria, Va.: Jane's Information Group, 1997), 652.

3. Payload weights for evaluation were chosen to represent a mid-range capability and one for maximum weight operations. To retain operational relevance, calculations were made factoring in sufficient fuel onboard for two hours of flight plus required reserves.

4. Robins Air Logistics Center, Technical Order (TO) 1C-130H-1-1, *C-130H Performance Manual,* May 1986, 3–56.

5. Ibid., 9–19.

6. Jackson, 653.

7. Michael P. Davis, "Low Altitude Parachute Extraction System Approach to Extraction Zone Procedures" (Scott AFB, Ill.: Air Mobility Command [AMC], June 1993), 1.

8. David R. Mets, interviewed by author, 10 March 1999. Dr. Mets was a C-130B pilot and also a gunship pilot during the Vietnam War and conducted LAPES operations into Khe Sanh.

9. Jackson, 653.

10. Multi-Command Regulation (MCR) 55-130, vol. 2, *C-130 Tactical Operations*, 1 August 1993, 31.

11. MCR 55-130, vol. 1, *C-130 Operations*, 15 April 1993, 8.

12. Robins Air Logistics Center, TO 1C-130H-1, *C-130H Operations Manual*, October 1998, 4-287.

13. Ibid., 4-357, 4-359.

14. AMC, "Combat Operations," *1998 Air Mobility Master Plan Update*, n.d., n.p.; on-line, Internet, 10 March 1999, available from http://public.scott.af.mil/hqamc/about/ammp/EQUIPMNT/8_AMCwep/4_C_130.htm.

15. Ibid.

16. Robertson.

17. General Accounting Office (GAO), *Intratheater Airlift: Information on the Air Force's C-130 Aircraft: Report to the Honorable John McCain, U.S. Senate* (Washington, D.C.: GAO, 1998), 11.

18. Jackson, 652.

19. Lyle H. Schaeffer, "Automatic VMC Protection in the C-130J," *Society of Experimental Test Pilots Forty-First Symposium Proceedings* (Lancaster, Calif.: Society of Experimental Test Pilots, 1997), 235–52.

20. The C-130J performance data is still being developed. Numbers for prepared surfaces are based on performance specification requirements in *Lockheed C-130J Manufacturer Model Specification*, Document No. ER/S-7100M/J-0, Revision E, 28 August 1996. Semiprepared runway data estimated based on runway condition reporting calculation used on C-130E/H.

21. ECHS still in development for the Air Force. I attended several design/integration meetings as the Air Force test pilot representative between November 1996 and May 1997. For more information, contact the C-130J Test Team, 418th Flight Test Squadron, Edwards AFB, California.

22. GAO, 19.

23. Jackson, 656.

24. W. H. Deckert and J. A. Franklin, *Powered-Lift Aircraft Technology* (Washington, D.C.: Scientific and Technical Information Division, National Aeronautics and Space Administration, 1989), 5.

25. Data computed from C-17A Mission Computer Block 10, #P601H; and Wright-Patterson AFB, TO 1C-17A-1-1, *Performance Manual*, 15 August 1995, change 8, 1 September 1998.

26. Ibid.; and Peter Bouras and Pamela A. Melroy, "C-17A Unpaved and Matted Runway Operations," report no. AFFTC-TR-95-22 (Edwards AFB, Calif.: Air Force Flight Test Center, October 1995), 13, 21.

27. Ibid.; and Wright-Patterson AFB, TO 1C-17A-1-1, 342.

28. Scott M. Bailey, *60,000 Pound (60K) Linked and 110,000 Pound (110K) Sequential Platform Low Velocity Airdrop (LVAD): Follow-on Operational Test and Evaluation (FOT&E) of the C-17 Aircraft* (Fort Dix, N.J.: AMC, Air Mobility Warfare Center, 33d Flight Test Squadron, 1998), 5.

29. Michael J. Kamosa and Michael J. Welch, "Evaluation of C-17 Combat Offload Capabilities," report no. AFFTC-TR-94-24 (Edwards AFB, Calif.: Air Force Flight Test Center, October 1995), 15.

30. AMC, *1997 Air Mobility Master Plan* (Scott AFB, Ill.: AMC, October 1996), 5-68.

31. Jeffrey E. Gates, *C-17 Defensive System (DS) 1553B Bus Interface: Combined Developmental/Operational Test and Evaluation (D/OT&E), Detailed Test Plan*, T/WR 98-02 (Fort Dix, N.J.: AMC, Air Mobility Warfare Center, 33d Flight Test Squadron, 1998), 5.

32. Rodney L. Cleary and Franklin L. Spear III, *C-17 Crew Armor Protection*," report no. T/WR 96-02 (Fort Dix, N.J.: AMC, Air Mobility Warfare Center, 33d Flight Test Squadron, 1997), 5.

33. Jackson, 583.

34. Ibid., 584.

35. "Aerospace Source Book: Rotary-Wing Outlook/Specifications," *Aviation Week & Space Technology*, 11 January 1999, 78.

36. Jackson, 587.

37. "Army Technology—CH-47D/MH-47E Chinook—Heavy Lift Helicopter," n.d., n.p.; on-line, Internet, 11 March 1999, available from http://www.army-technology.com/projects/chinook/index.html.

38. Jackson, 585.

39. Ibid.

40. Ibid., 588.

41. Director, Operational Test and Evaluation, Office of the Secretary of Defense. *V-22 Osprey FY97 Annual Report*, n.d., 2; on-line, Internet, 10 March 1999, available from
http://www.dote.osd.mil/reports/FY97/navy/97mv22.html.

42. Jackson, 580.

43. Ibid.

44. "Air Force Technology—V-22 Osprey—Medium Lift Multi-mission Tilt-Rotor Aircraft," n.d., n.p.; on-line, Internet, 11 March 1999, available from http://www.airforce-technology.com/projects/osprey/index.html.

45. Jackson, 580.

46. Ibid.

47. "Air Force Technology—V-22 Osprey—Medium Lift Multi-mission Tilt-Rotor Aircraft."

48. Tom Bergeson, interviewed by author, 12 March 1999. Major Bergeson is an F-15C pilot and a graduate and former instructor at the USAF Fighter Weapons School.

49. AMC, 5-67.

50. Ibid., 5-71.

51. AMC, "Operations," *1998 Air Mobility Master Plan Update*, n.d., n.p.; on-line, Internet, 10 March 1999, available from
http://public.scott.af.mil/hqamc/about/ammp/ROADMAPS/24_ds.htm.

52. TRADOC Pamphlet 525-66, *Future Operational Capability*, "TC 97-004, Super Short Takeoff and Landing (SSTOL)," "TC 97-001, Logistics Mobility," "TC 97-002, Resupply," "AV 97-009, Improved Aircraft Performance," "TR 97-032, Sustainment Logistics Support," n.d., n.p.; on-line, Internet, 6 March 1999, available from
http://www-tradoc.army.mil/tpubs/pams/p525-66e.htm.

Chapter 5

Bridging the Gap—Future Theater Airlift Concepts

Any sufficiently advanced technology is indistinguishable from magic.

—Arthur C. Clarke

Identification of capability deficiencies contains little utility if not accompanied by alternatives on how to rectify them. This chapter presents several concepts that attempt to provide satisfactory alternatives. Two concepts in direct competition with each other are the ATT aircraft designs of Boeing and Lockheed. Other concepts described may be complementary to one, both, or neither of these designs. Because of the diversity in the breadth and extent that each concept supports the Army After Next, the alternatives will be categorized under the four previously identified capabilities of austere operations, cargo-handling capability, situational awareness, and defensive systems.

Austere Operations

The ability to operate from semiprepared and unprepared surfaces is key to supporting the AAN vision. Though there are several variables in the equation, two of the primary capabilities necessary for austere airfield operations are exceptional aircraft performance and the ability to identify suitable landing surfaces. The key to operating at small airfields is the ability to maintain controlled flight at low airspeeds. Such capability allows a reduced ground speed at touchdown and a reduced stopping distance.

Super Short Takeoff and Landing

The key to operating at small airfields is the ability to maintain controlled flight at low airspeeds. Such capability allows a reduced ground speed at touchdown and a reduced stopping

distance. To accomplish the slow-speed flight required at small airfields, the aircraft must either have the capacity to generate tremendous lift or reduce the requirement for lift at the lower speeds. One way to increase lift is to apply airflow across the portions of a fixed wing that would otherwise stall. This application allows the aircraft to fly at higher angles of attack and is known as boundary layer control.[1] The other method for reduced speed flight is to transfer the thrust vector from a fore/aft direction to the vertical. This method essentially puts it more in line with the lift vector, similar to that of a helicopter. This concept is known as tilting.

Tilt Wing. As opposed to the V-22 tilt-rotor concept, in the tilt-wing design the engines and propellers are fixed relative to the wing. In transitioning from normal to slow-speed flight, the entire airfoil tilts, and rotates the thrust axis with it. In addition, because the engines are in the same position relative to the wing, the propeller airflow across the wing is still creating lift. This concept was first tested over 30 years ago, most notably in the XC-142 and XL-84 aircraft.[2]

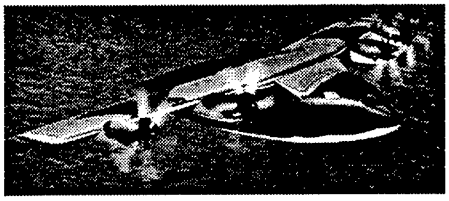

Source: This photo was extracted from a promotional brochure provided by the Boeing Company. Mike Rohrlick, Boeing, Inc., granted permission for use in March 1999.

Boeing Tilt-Wing Advanced Theater Transport

The Boeing Company is using the tilt-wing design as the basis for its ATT design. The wing is designed to tilt up to 45 degrees from its cruise configuration. The aircraft also employs high-lift devices such as externally blown flaps similar to those used on the C-17.[3] Initial analysis on this concept concluded that with the fly-by-wire flight control system and design of the body, the control effectiveness at slow speed offered by an elevator is marginal. For this reason and in the interest of weight savings, the present design calls for a tail-less configuration.[4] Though the program still primarily consists of a "paper" airplane (no full-scale prototype), simulation and modeling analysis has determined that the proposed design configuration will meet the AAN requirement to deliver 30 tons into and out of a 750-foot runway.[5]

Circulation Control Wing. This concept is a subset of boundary layer control. In order to provide continued control at low speeds, the circulation control is basically designed to prevent the wing from stalling. This is done by "introducing a high-energy jet onto the upper, trailing edge region of a blunt trailing edged airfoil (occasionally leading-edge blowing is also used)."[6] This method to produce lift at low speed, combined with other advanced high-lift devices and the lift efficiency of a blended wing-body design, is the cornerstone of the Lockheed ATT strategy for SSTOL. As with the Boeing concept, the concept has not been funded to allow for a prototype. Current analysis shows that to operate with the 30-ton payload set by the Army, the aircraft can land in the required distance but would require nearly 1,200 feet for takeoff. The 750-foot runway would allow payloads for takeoff of up to 20,000 pounds.[7]

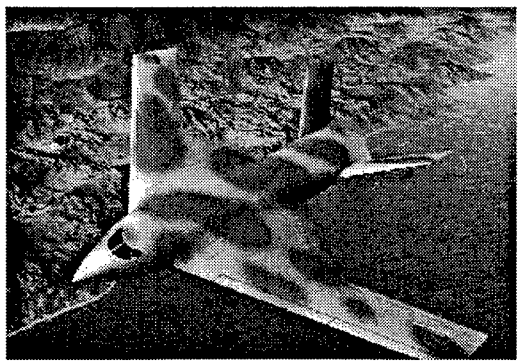

Source: This photo was extracted from a promotional brochure provided by Lockheed Martin Aeronautical Systems (LMAS) Company. John Nichols, Lockheed Martin, Inc., granted permission for use in March 1999.

Lockheed Advanced Theater Transport

Opportune Landing Sites

To maximize theater airlift flexibility, it is important to be able to provide the battlespace commander several options to support operations. In the AAN environment this will become even more important as theater airlift evolves from a delivery and sustainment force to a combat maneuver element. Currently, there are several restrictions placed on runway operations based on surface hardness, smoothness, and distance. Even in a potentially austere environment, members of a ground combat control team (CCT) must perform a significant evaluation of the surface environment before operations

are permitted.[8] In the future as envisioned by the AAN, such evaluations are not practical. The time and resources invested in investigating possible landing sites will detract from the primary missions. Such operations are likely to increase the vulnerability of the airlift missions by potentially alerting the enemy of intended future use of a particular area. The opposing needs of providing flexibility in a fluid combat environment and ensuring safe airlift operations in the forward area present a challenging dilemma.

A study group made up primarily of members from Boeing and Bowling Green State University, Bowling Green, Ohio, was established to solve this problem. The basic concept being developed involves the use of commercially available and relatively inexpensive satellite imagery, combining it with advanced modeling techniques and identifying locations suitable for landing within an area of interest.[9]

The process is far too complex to elucidate fully within the framework of this paper. Many of the details are still proprietary, but a brief synopsis is possible. Analysts obtain 30-meter resolution satellite imagery of the area of interest. They then exclude known unusable geographic features such as mountain peaks and bodies of water. During the first "filtering" exercise analysts identify pixels on the imagery containing large amounts of chlorophyll, indicating areas of lush vegetation or forests. This narrows the field of study and allows the analysts to pick various landing candidate areas for further investigation. They then assess parameters such as brightness and "shading" to model the surface type. By applying known characteristics of surface types to surface conditions, the analysts can then predict suitable landing sites without the need for actual on-site inspection.[10]

Though the concept may appear far-fetched, the preliminary results to date have been quite impressive. During a field study in South Dakota in 1998, the test team sought to predict suitable landing surfaces based on requirements for minimal slope, no obstacles, no standing water, no thick vegetation, and weight-bearing capacity. At the 36 sites analyzed, the test team predicted which were suitable and which were unsuitable with 100 percent accuracy.[11] Though this technol-

ogy is in its infancy, it possesses the potential to provide the battlespace commander with flexibility in employment options and schemes of maneuver.

Precision Airdrop

Andrew C. Braunberg recognized that "from the ground, the C-130 flying at 30,000 feet is a mere speck in the sky, and the payload kicked out the back is invisible in the early morning darkness. The transport airplane is well on its way home by the time the delivery drops into its target zone; the 20-minute descent is autonomous, silent, passive and purposeful."[12] Such a scenario is possible through the development of a precision air-droppable capability. This capability would allow resupply in austere areas without subjecting the aircraft to enemy fire. If done in periods of reduced visibility, it will also prevent alerting the enemy of the whereabouts of friendly forces. Current low-level airdrop in the C-17 requires the crew to navigate to an area, program the known information about the cargo and parachute, and obtain current surface wind conditions from ground personnel on the drop zone. The crew then flies to the computed air release point (CARP) and releases the load. From there the load becomes a free-fall, passive system with accuracy dependent on factors such as wind predictions, navigation accuracy, actual load exit time, and chute deployment time. Precision airdrop improves on this capability by adding GPS-aided guidance and control to the system, essentially steering the load to the target.

One basic design, known as the guided ram-air parafoil, consists of a large rectangular parachute (similar in shape to those used by demonstration teams) with a guidance and control package attached to the base of the risers.[13] After release from the aircraft and subsequent parachute deployment, the guidance would "fly" a programmed descent profile, adjusting for current conditions. Recent test efforts have set a near-term goal of a 42,000-pound platform delivered from an altitude of approximately 25,000 feet at a horizontal distance of more than 10 miles, landing within 30 feet of its intended target.[14]

Another precision air-droppable design under investigation is a deployable fabric-wing vehicle. This system consists of a

folded wing package with guidance and control sitting atop the standard load. Upon release, an extraction chute deploys and unfolds the wing, allowing for guided gliding flight to the target. This system is not as robust as the guided parafoil and is only capable of delivering 2,200 pounds of cargo with an accuracy of one hundred feet. It increases standoff capability, with the increased glide ratio of the wings allowing cargo deployment over 30 miles from the target.[15]

Cargo-Handling Capability

Two areas of emphasis emerge when designing cargo-handling capabilities of a future theater airlift platform: speed and autonomy. In projected AAN operations the combat troops receiving the cargo will be highly mobile, and it is unlikely they will travel with any cargo-handling equipment except for the strength of their own backs. Each of the following concepts is being developed with speed and autonomy in mind.

One design, known as the robotic transport system (RTS), consists of a crane-type mechanism designed to pick up loads and move them forward or aft to the appropriate position. Two rails on the fuselage ceiling run the length of the cargo compartment to secure this mechanism. Robotic arms hang from these points and are manipulated to secure the cargo at its base (fig. 2). For cargo offload the RTS then lifts the cargo off the floor, transfers it aft until the cargo clears the aft portion of the floor, and deposits it in the bed of a waiting vehicle or on the ground.[16] For this crane-type operation to work, there must be enough upper fuselage "overhang" to allow vehicles to maneuver into offload position or cargo to be lowered to the ground without interference from the aft portion of the fuselage floor. To facilitate this the design that accompanies the RTS consists of a double-hinged ramp. This ramp is connected to both the cargo floor and the ceiling by retractable hinges. This connection provides the capability to raise the ramp from the upper hinges and provide more overhang for the RTS rails to manipulate cargo (fig. 3).[17]

Another approach to improving cargo loading involves the use of an automated manipulator arm. This arm hangs from a turntable mechanism that is secured to the top of the fuselage

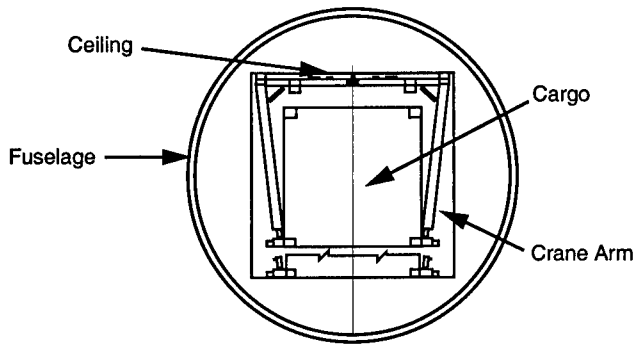

Source: James Gibson, "Technologies for Airlift Cargo Handling (TACH)" (WL-TR Wright-Patterson AFB, Ohio: Wright Laboratory, May 1993), 22.

Figure 2. Robotic Transport System

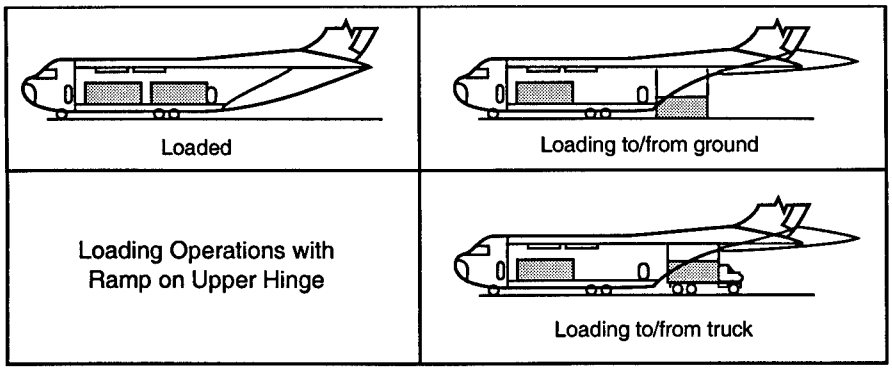

Source: James Gibson, "Technologies for Airlift Cargo Handling (TACH)" (WL-TR Wright-Patterson AFB, Ohio: Wright Laboratory, May 1993), 25.

Figure 3. Loading with Double-Hinged Cargo Ramp

in a manner similar to the RTS (fig. 4).[18] The function of the arm is to be a central mobile attachment point for various tools being used for onload/offload operations. Such tools as trailer and flatrack dollies provide the hydraulic lifting and pulling power, and the mechanical arm provides the guidance and stability. In this same cargo compartment concept, the cargo ramp is double hinged but in a different manner than the RTS. One hinge connects the ramp to the floor, and a second hinge is in the middle of the ramp, thus allowing it to adjust to different vehicle heights.[19] Once the cargo is loaded, the system uses a combination of retractable rollers and belts to position the cargo.

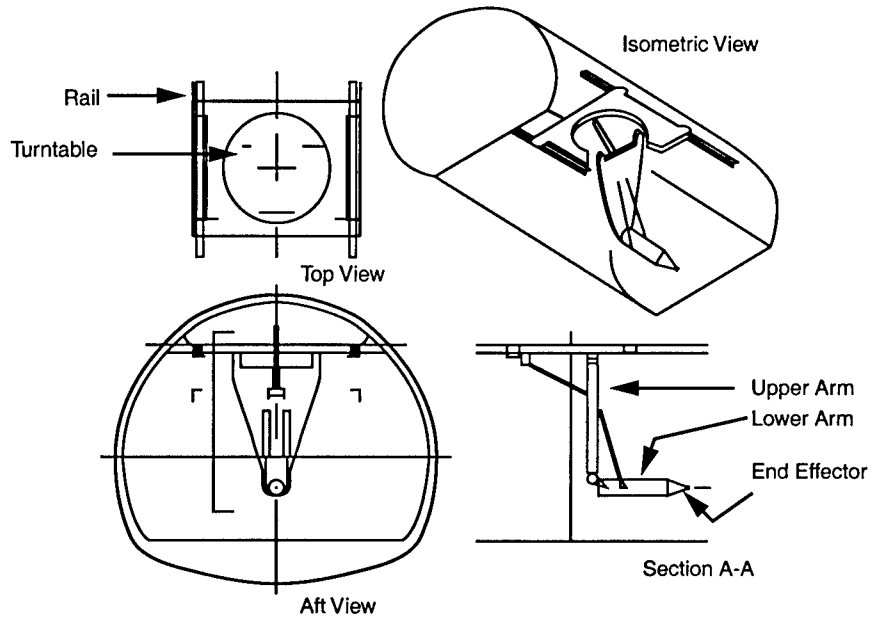

Source: M. A. Rohrlick, B. K. Rawdon, "Advanced Cargo Restraint System (ACRS) Project" (Wright-Patterson AFB, Ohio: Wright Laboratory, July 1994), 4-1.

Figure 4. Automated Manipulator Arm

Advances in cargo floor design will greatly help cargo restraint operations. Currently the loadmaster must manipulate a myriad of chains and straps to ensure adequate fore/aft restraint. Even in the C-17—with the most advanced cargo compartment in the inventory—the various restraint devices are encumbering and contribute to an increased aircraft reconfiguration time.[20] One design worthy of investigation includes a floor with multiple retractable tie-down devices. These devices are equipped with nearly all of the apparatus required to secure cargo, including a strap and hook. Embedding such devices throughout the cargo floor will greatly enhance loading efficiency, especially for cargo of nonstandard size and weight.

The newest and most comprehensive concept is known as the load-by-wire (LBW) system currently being developed by Boeing. This system combines and updates many of the features of

other designs.[21] An articulated ramp (fig. 5) permits transfer of cargo from vehicles of varying heights, thereby increasing loading efficiency. The LBW contains a container crane system designed primarily to load or unload the larger nonrolling stock from trucks. Two of the primary pieces of cargo in this category are the 8-by-20-foot International Standards Organization (ISO) container and the palletized loading system (PLS) flatrack of the same dimensions. Once these cargo types are loaded, prepositioned retractable locks set for the ISO and PLS dimensions are engaged, and the cargo is instantly secured. For palletized cargo, tines extend to lift the cargo off the truck (the pallets will sit on shoring to allow room for tines to fit between the pallet bottom and truck bed), and power rollers reel the cargo onto the ramp. From there a pneumatically operated system of rollers, belts, and chains will manipulate the cargo to the appropriate location, where the retractable restraint devices will secure it in place. The crane system will also be used to lift any palletized cargo off the ground or any other surfaces that do not provide space for the ramp tines to operate.

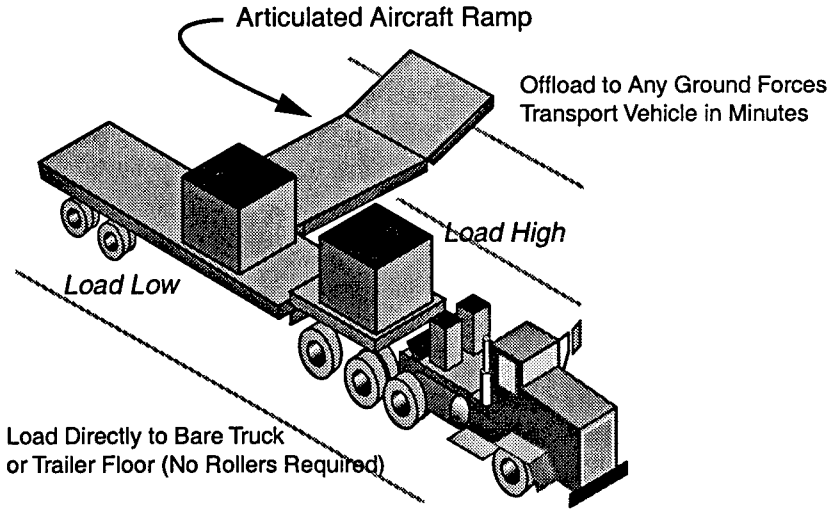

Aircraft Ramp Adjusts to All Truckbed Heights

Source: This figure was extracted from a promotional brochure provided by the Boeing Company. Mike Rohrlick, Boeing, Inc., granted permission for use in March 1999.

Figure 5. Load-by-Wire Articulated Ramp

Situational Awareness

AMC appears to be posturing adequately in this area for future airlift operations. Integration of GPS into all navigation systems greatly increases accuracy. Display technology has enabled such systems as digital moving maps and HUDs to provide accurate information to the aircrew in a timely and effective manner—a good foundation for situational awareness. The next step is to enhance the ability to react in a dynamic environment. This enhancement is the idea behind the concept of RTIC information.

AMC is moving toward fielding an RTIC capability. Operational testing is under way on the design of the airborne battlefield intelligence (ABI) system. "In layman terms, ABI will display signals the satellites, the RC-135 and AWACS are picking up and broadcasting such as the location of surface-to-air missiles, radar locations, airborne aircraft and other dangers. . . . If a threat such as a surface-to-air missile becomes active, a crew will be able to change their flight path as needed for safe mission operation."[22] The ABI adds a second piece to the situational awareness puzzle. In addition to the increased positional awareness provided by navigational accuracy, the aircrew will have more information about enemy positions.

The next step in improving situational awareness is being addressed through the concept of automated data fusion. In this instance fusion is defined as "the evaluation of data from one or more sources to extract knowledge about events or objects of interest."[23] Such a concept goes beyond the realm of information gathering and display and attempts to interpret the data to predict intentions. This task is daunting; and the Scientific Advisory Board recommending its pursuit recognizes the difficulties due to "its immense computational requirements, and because robust interpretations of sensor data are hard to develop from mathematical considerations alone."[24] On the positive side, situational awareness is not an all-or-nothing proposition; and even incremental changes will help the aircrew of the future to accomplish the increasingly demanding mission.

Defensive Systems

Figure 6 illustrates the concept of layered survivability. Success on the outer layers diminishes the requirement for expending effort on the inner layer capabilities. This simplified construct will provide the framework for describing new defensive systems concepts.

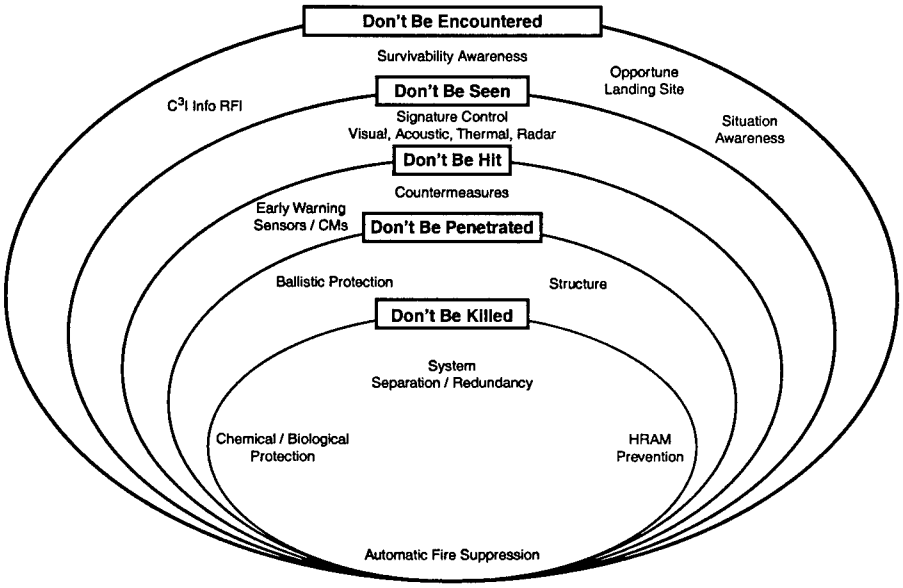

Legend:

C³I—command, control, communications, and intelligence
CMs—countermeasures
HRAM—hardened random access memory
RFI—request for information

Source: Adapted from a briefing on Aircraft Threat Protection and approved by Paul Barr, senior engineer/scientist, Advanced Transports and Tankers Program, Boeing Company, Long Beach, California.

Figure 6. Layered Survivability

Don't Be Encountered

This objective implies conducting operations in nonhostile territory. The AAN requirement for theater airlift is in conflict with this concept. The best approach to support this layer is through the use of situational awareness and opportune landing sites in an attempt to avoid any encounter with enemy forces.

Don't Be Seen

Perhaps the most effective method of accomplishing this goal is in the form of stealth. The Lockheed teams have incorporated this heavily into their ATT concept. They propose that much of the stealth technology development costs have been paid; and for the incorporation of LO capabilities on the ATT, "F-22 levels of signature reduction will work."[25] Another approach to this objective is through passive navigation, which involves the use of digital moving maps in place of traditional emitting navigation aids.[26]

Don't Be Hit/Don't Be Penetrated

These objectives have gained emphasis in recent years, sparked by such events as the Italian Air Force transport shot down approaching Sarajevo, Bosnia–Herzegovina, in 1993.[27] AMC has identified the increasing surface-to-air threat and is scheduled to have all C-17 and C-130 aircraft equipped with current defensive systems by FY 2006.[28]

One deficiency in current defensive systems is the lack of IR missile detection capability. The Scientific Advisory Board has acknowledged this shortfall and claims that the technology is just around the corner.[29] Though insufficient in and of itself, identification is a necessary step to survivability because it allows more efficient use of the onboard defensive systems. Defensive countermeasures also have room for growth. Though it is not trivial, solving the problem of detecting missile launch and trajectory provides the opportunity to defeat the missile by destruction, rather than spoofing, jamming, or evading. One such countermeasure is a directed-energy weapon. This capability involves the use of an onboard laser or high-power directed microwave system to defeat the missiles. This offensive capability offsets the lack of maneuverability and takes advantage of the fact that " transports have much more space and power available than tactical aircraft and hence [a directed energy system] is more feasible."[30]

Don't Be Killed

This objective is one that aircrews obviously will not want to depend on but will be grateful it was considered if the time comes. Primary areas for consideration when designing a new theater airlifter will include durable composite structures and separation and redundancy of critical systems. One example of a unique approach to redundancy is a study conducted by the National Aeronautics and Space Administration known as the propulsion controlled aircraft (PCA). The concept involves programming the flight controls to interface with the electronically controlled engines to provide aircraft control in the event of loss of hydraulic power to the flight controls.[31]

It All Sounds Good

The list and description of future concepts in this chapter is by no means complete. It is, however, an attempt to identify feasible paths to bridge the gap between the theater airlift system as it is and the system as it should be to support the Army After Next. Future concepts are exciting and spark interest in all that is possible. It is important for planners to focus on the application of those concepts and not be lured by the soothing sounds of the technological sirens. Within the four criteria for evaluation, some concepts were in opposition to others while some were complementary to any future system. After seeing what is *possible,* the next step is to determine what is *best.*

Notes

1. USAF Test Pilot School, "Performance Flight Testing Phase, Subsonic Aerodynamics" (Edwards AFB, Calif.: Air Force Flight Test Center, November 1992), 2.61.

2. Ling-Temco-Vought, Inc., *Applications of C-142 V/STOL Transports* (Dallas, Tex., 1965); and David Mondey, ed., *International Encyclopedia of Aviation* (New York: Crown, 1977), 362.

3. W. H. Deckert and James A. Franklin, *Powered-Lift Aircraft Technology* (Washington, D.C.: Scientific and Technical Information Division, National Aeronautics and Space Administration, 1989), 5.

4. Interview with Mike Rohrlick, ATT program manager, Boeing Co., 18 February 1999.

5. Briefing delivered by the ATT team on 18 February 1999. The briefing slides are Boeing proprietary. Information released under the approval of Mike Rohrlick at the Boeing Co., Long Beach, Calif.

6. John W. Trainor, "A Wind Tunnel Study of a Sting-Mounted Circulation Control Wing" (master's thesis, Wright-Patterson AFB, Ohio: Air Force Institute of Technology, December 1989), 2.

7. Limitations are based on takeoff performance. Briefing slides prepared by Lockheed Martin. Information released under the approval of John Nichols, senior specialist engineer, Advanced Concepts Team, Lockheed Martin Corp., Smyrna, Ga.

8. Briefing delivered to C-17 test team by the combat control team prior to semiprepared runway testing, August 1996.

9. Briefing delivered by Don Jennings, principal engineer, Advanced Transports and Tankers, the Boeing Co., 18 February 1999.

10. Ibid.

11. Ibid.

12. Andrew C. Braunberg, "Parachute Guidance Empowers Programmed Payload Placement," *Signal*, May 1996, 83.

13. A. W. Bennett and C. L. Wood, "Precision Airdrop System Development" (Wright-Patterson AFB, Ohio: Air Force Materiel Command, March 1996), 4-36.

14. Ibid., 4-37.

15. Ibid., 4-41.

16. James Gibson, "Technologies for Airlift Cargo Handling (TACH)" (WL-TR Wright-Patterson AFB, Ohio: Wright Laboratory, May 1993), 17.

17. Ibid., 34.

18. M. A. Rohrlick and B. K. Rawdon, "Advanced Cargo Restraint System (ACRS) Project" (Wright-Patterson AFB, Ohio: Wright Laboratory, July 1994), 4-1.

19. Ibid., 4-13.

20. Miguel Lopez and Michael Dodson, "Evaluation of C-17A Cargo Loading and Transport, Ground and In-flight Reconfiguration and Troop Transport Capabilities," AFFTC-TR-93-34 (Edwards AFB, Calif.: Air Force Flight Test Center, March 1994), 16.

21. Briefing and paper by Mike Rohrlick, ATT program manager, the Boeing Co., Long Beach, Calif., on 18 February 1999. Released under the authority of Mr. Rohrlick.

22. Linda P. Meyer, "Increasing Situational Awareness in Air Mobility Command Aircraft," *Airlift/Tanker Quarterly*, Winter 1998, 19.

23. Charles L. Morefield, *New World Vistas, Air and Space Power for the 21st Century, Information Applications Volume* (Washington, D.C.: USAF Scientific Advisory Board, 1995), 1.

24. Ibid., 5.

25. Briefing slides by Lockheed on ATT concept received 4 March 1999. This briefing was proprietary and the quote is cited under authorization of John Nichols, senior specialist engineer, Advanced Concepts Team, Lockheed Martin Corp., Smyrna, Ga.

26. John A. Skorupa, *Self-Protective Measures to Enhance Airlift Operations in Hostile Environment* (Maxwell AFB, Ala.: Air University Press, 1989), 100.

27. Nick Cook, "Shielding the Airlifters," *Interavia*, October 1997, 41.

28. AMC, "Combat Operations," *1998 Air Mobility Master Plan Update*, n.d., n.p.; on-line, Internet, 10 March 1999, available from http://public.scott.af.mil/hqamc/about/ammp/EQUIPMNT/A_operln/3_COMBAT.htm.

29. Scientific Advisory Board, *New World Vistas, Air and Space Power for the 21st Century, Mobility Volume* (Washington, D.C.: USAF Scientific Advisory Board, 1995), 18.

30. Ibid., 19.

31. I participated in the study and flew as a guest test pilot to evaluate the system on the MD-11 on 30 November 1995.

Chapter 6

Analysis and Conclusions

The color of the cat doesn't matter as long as it catches the mice.

—Chinese Proverb

The ATT should be a supersonic aircraft capable of all-spectrum stealth even as it slows to a hover and feathery-soft touchdown, shortly after which it nearly instantaneously onloads the awaiting mechanized battalion for transit and offload one hundred kilometers away.

Fiction aside—when charting a course for the future of theater airlift—it is important to focus on the ultimate aim. The goal is not merely to develop a system that outperforms any other in accomplishing the current mission, but rather one that can best accomplish the missions forecast throughout its service life. The Army After Next is pursuing a concept of operations that makes even our newest theater airlift assets inadequate.

Analysis

Before delving into the analysis, there is a point that bears repeating. An entering assumption to this paper was that the future operational concept of the AAN—*or something that strongly resembles it*—would become a reality. This assumption is not a blind leap of faith. The AMMP, the Air Force 2025 study, Marine Corps *Operational Maneuver From the Sea*, and *Joint Vision 2010* are pursuing and planning for substantial technological advances, and current trends are encouraging. In keeping with the theme of this paper, the following analysis is structured around the four evaluation criteria.

Austere Operations

Based on collected data presented to this point, the Boeing tilt-wing aircraft provides the greatest capability for austere operations. The powerful propellers, wing tilt, and body design

enable the SSTOL capability to meet the Army's 30-ton/750-foot runway requirement described in TRADOC Pamphlet 525-66.[1] The Lockheed ATT design data shows the ability to land with a payload of 30 tons within the required distance, but takeoff distance requires another four hundred feet.[2] The Lockheed design would be adequate for the SSTOL capability if the future theater airlift force mission continues to be delivery and sustainment, as it is today. The AAN concept, however, calls for theater airlift to become a maneuver element, which would require the ability to *deliver* and *retrieve* ground personnel and equipment. Only the Boeing tilt wing provides the capability to take off with 30 tons in the required distance.

The precision air-droppable approach is another option that greatly enhances the current airlift mission. Precision standoff delivery is an excellent way to increase aircrew survivability and place equipment very close to where it is needed. However, this technique presents new issues. The expense of the guidance and control unit on the parafoil (estimated at approximately $50,000) dictates that it not be left behind.[3] The unfolded wings on the glided system must also have the capability to be easily refolded if it is to be transported with the ground personnel. Both of these systems become dead weight traveling with a force attempting to be as light and mobile as possible. Even if these problems are no more than an annoyance, the precision air-droppable systems do not present satisfactory austere operations capability in themselves. They also only fulfill the delivery requirement of future theater airlift.

At least as important as the platform for supporting the AAN is the system that enables that platform to operate in its intended fashion. The opportune landing site (OLS) concept—or similar technology—is critical to the complete fulfillment of the AAN support requirements. An operative OLS system directly supports both flexibility and survivability. Determination of suitable landing areas throughout the battlespace provides the commander with multiple options for orchestrating the "ambush dynamic" the AAN seeks.[4] Eliminating the need for extensive ground site surveys enhances the principles of surprise and security.

Cargo-Handling Capability

In his 1987 book, *Determining Future U.S. Tactical Airlift Requirements,* Jeffrey Record points out: "Austere and hastily prepared landing sites in the future will not have the right amounts and types of traditional MHE needed to unload the ATT, and unloading operations in exposed forward sites must be accomplished quickly in order to reduce risks to the ATT, its crew, and the ground unit receiving the cargo."[5]

Each system described presents a vast improvement over current capabilities to handle cargo in an austere environment. The advantages presented by an autonomous, self-contained system are glaring; they give cause to question why such systems have not been integrated into current aircraft. In point of fact, there were earlier cargo aircraft designed with limited enhanced cargo-handling capability. Both the Douglas C-74 and its more widely produced follow-on, the C-124, had an internal elevator system to accommodate the split-level cargo compartment. Each also had a built-in crane to aid in cargo loading.[6] These aircraft were designed in 1942 and 1949. The cargo aircraft of today were designed later in the cold war. During that time, forward basing provided aerial ports from which external MHE could be used for cargo operations. This alleviated the need for robust onboard systems, saving development costs and aircraft weight. Since that time forward basing has dried up, and MHE has become an Achilles heel. "An airlift system is only as capable as the materials handling equipment (MHE) supporting it. Our current MHE fleet's inventory, age, and reliability hinder our ability to fully support 2 MRCs."[7]

The load-by-wire (LBW) system provides the most robust cargo-handling capability. By combining the best features of other designs, the LBW promises the ability to autonomously onload/offload nearly any cargo. The articulated ramp adapts to various truck heights for faster load transfer. When combined with a wide-body design, the LBW will be capable of laterally transferring cargo, if necessary. Depending on the type and quantity of cargo onboard, this could be very useful. For example, in its role of sustaining the smaller, dispersed forces, it is conceivable that one ATT may have cargo A, B, and C for desti-

nations X, Y, and Z, respectively. Proper load planning would ensure that if destination X was reached first, cargo A would be positioned closest to the ramp. Any diversion to destination Y on a narrow-body ATT without an LBW system would involve a significant ground delay. Cargo A would have to be offloaded, then cargo B, followed by a reload of cargo A. Depending on the type and quantity of cargo, such a scenario on a wide-body ATT with LBW would involve less delay. With the aid of an automated lateral and fore/aft system of belts, chains, and rollers, the LBW could potentially move cargo along the floor similar to a Chinese puzzle. A wide-body ATT also offers more rapid handling capability simply because of the increased surface area at the rear of the aircraft for cargo transfer.

The key to obtaining such a comprehensive cargo-handling system is to integrate it fully into the aircraft design. This concept brings with it several challenges. Cost is always an issue in the development of any revolutionary system. In addition, planners must closely monitor the aircraft weight increase caused by such a system and evaluate that against required performance. The use of lightweight composite structures may significantly alleviate the weight problem. The increased potential for operations in hostile environments dictates that survivability and redundancy issues are addressed with any critical system. With its essential role in supporting the AAN, the LBW cargo-handling system certainly qualifies as such a system.

Situational Awareness

This evaluation did not produce significantly alternative paths to achieve the desired situational awareness capability for the twenty-first century theater airlifter. The collective thinking is that more is better. To this point, current systems such as GPS and HUDs have been integrated into airlift platforms without regard for other users. This has not interfered with the enhancement of basic situational awareness—knowing where you are. Knowing where the enemy is involves interaction with other system users and as such requires a highly adaptable architecture. The current rate of technological change suggests that new systems' potential capabilities might be artificially limited by the need for interoperability. An

adaptive architecture will alleviate this setback by building "growing space" into the system.

The current ABI system will provide lessons for future RTIC information systems, and those must be rolled into the ATT concept. Because the ATT will be one of many users of a large system, the designers will not have to devote significant time and energy to developing an entire system. Instead they must focus on tailoring the ATT avionics and information suite to integrate with the overall network. The ATT team does not have to build the boat, but they need to be on board when it leaves the dock.

This paper has described (with guarded optimism) the extent to which the AAN will exploit information technologies to achieve battlespace awareness. By integrating into the system, the ATT can enhance combatant commanders' flexibility by providing them real-time information on the status of potential maneuver assets. Such situational awareness capability supports the focused logistics piece of *Joint Vision 2010* providing "the fusion of information, logistics, and transportation technologies to provide rapid crisis response, to track and shift assets even while enroute, and to deliver tailored logistics packages and sustainment directly at the strategic, operational, and tactical level of operations."[8]

Defensive Systems

Applying the concept of layered survivability, the use of LO technology provides the most advantageous defensive capability by accomplishing the objective of "don't be seen." Based on this statement alone, the Lockheed ATT design has an advantage over the tilt-wing aircraft. Operations in support of the AAN "move-strike-move battle rhythm" will be conducted throughout a disputed battlespace.[9] The ability to maneuver and sustain combat forces without being detected enhances not only survivability but also the security of the supported ground forces. The unique mission of the future theater airlift force raises questions on the utility and feasibility of a low-observable design.

One of the primary missions of the ATT will be operating at austere airfields. This implies a semi- or unprepared surface with a potential for FOD. In conventional aircraft FOD is most

hazardous if the debris impacts flight control surfaces or is ingested into the engines. In stealth aircraft FOD takes on a whole new meaning. The entire surface integrity is essential to retaining LO capability.[10] Operations through these austere fields may significantly increase the radar cross section and make the aircraft more vulnerable.

To date, stealth has been an integral part of the design of three US aircraft: the F-117, B-2, and the F-22. Each of these was designed to operate in a high-altitude environment where radar cross section reduction is a significant enhancement. From its infancy the ATT concept has been developed for a mission in which its ingress and egress are flown at altitudes as low as two hundred feet.[11] In this environment the ATT crew must also be concerned with small arms fire, antiaircraft artillery (AAA), and IR and optically guided man-portable air defense missile systems. The stealth answer to such a problem is that if enemy forces cannot see the aircraft on radar, they cannot alert forces within its predicted flight path. Those forces would then be reduced to small arms fire or AAA they can bring to bear in an impromptu manner, greatly increasing the ATT chances for survival.

Such a strategy might be very effective for an aircraft constantly maneuvering through the battlespace. The ATT will not have this luxury, as its primary mission will be to pick up and deliver troops and equipment throughout the disputed area. During its approach and landing, the ATT must reconfigure, which includes extending its high-lift devices and landing gear. This reconfiguration will greatly increase the radar cross section—a factor not considered in designing current stealth assets. Regardless of this fact, the Lockheed LO design for its ATT offers a greater level of survivability than its tilt-wing counterpart. Is it enough?

The potential for LO degradation and the diversity of the potential threats at low-altitude demand that the ATT have more than just a stealthy shell. Current countermeasures are a step in the right direction, but low-altitude operations compress the time between identification, reaction, and CM deployment. The directed-energy weapon concept offers the most encouraging solution to this problem. The ability to defeat the missile threat by destroying it is more comforting than relying on out-

smarting it. The methodology of intercepting the missile through computing its trajectory suggests a follow-on capability of locating and targeting its source. This capability could enhance survivability through destruction and deterrence.

This concept also brings with it a certain amount of risk. More so than the previous concepts under analysis, the success of the design depends on projected technological advances. Specifically—"Next generation fast computing will be required to solve the difficult pointing and tracking problem for a directed energy defensive system to be successful."[12] Thus this method of aircraft defense should be treated with the same guarded optimism required when considering several of the AAN information dominance prospects. Its potential value demands that it not only be given consideration but also genuinely pursued for any aircraft with a mission similar to that of the ATT. As with several other concepts, weight and development costs will be important considerations.

A load-by-wire (LBW) cargo-handling system will indirectly provide aircraft defense. By efficiently managing the cargo operations at the austere locations, the LBW can significantly reduce ground time. This action provides an increased measure of security to the aircrew, cargo, and supported ground personnel.

Other Key Considerations

In the interest of limiting variables to provide more depth of focus, this paper has defined value primarily in terms of capability. However, to neglect the element of cost completely would be irresponsible. Nearly all of the new airlift concepts have been demonstrated to some extent. The future costs will be realized in the expansion of these concepts into an actual operational system. At this point it is unknown if the costs of developing and fielding a tail-less, tilt-wing, turboprop aircraft will be more expensive than to do the same for a stealthy, blended wing-body, highly lift-augmented, turbofan aircraft. Each aircraft company possesses its own unbridled enthusiasm and optimistic projections, but further independent research involving a developmental cost comparison would be invaluable.

One strategy that Lockheed is pursuing to reduce costs is to make the basic aircraft design capable of multiple roles, including a tanker and a special operations variant. This modular design concept would allow all aircraft variants to share a single production line for the bulk of the construction. The aircraft-specific modifications would include fuselage and wing plugs designed to readily attach to the basic structure.[13] Additions such as LO skin appliqué would only be included on the aircraft whose missions require it. This addition would provide cost savings by producing more of the basic aircraft and enabling economies of scale. Such modularity is also envisioned for the interior of the aircraft, allowing for reconfiguration to support different operations. Modularity has been identified by the *Air Force 2025* project as an important attribute of future systems.[14]

In pursuit of swing-role capability, Boeing is developing a "tail package" for its design to accommodate the air refueling. In this system the aft portion of the articulated ramp can be removed and replaced by a similar plug equipped with an extendable aerial refueling receptacle. The new plug connects to the aircraft plumbing and allows for refueling from the aircraft wing tanks. The same remote system used by the loadmaster for refueling will be adaptable for use by a boom operator or an automated system. With the tilt-wing top speed of four hundred knots (true airspeed), it is speed compatible with all of today's refuelable assets.[15]

Interoperability is also of interest when designing a new airlift capability. Supporting the operational forces in times of conflict is essential, but the aircraft possesses little overall utility if it is unable to integrate with the rest of the transportation system while carrying out its peacetime mission. Integration into the system includes the ability to accept and deliver cargo from other transportation modes expeditiously. The Army has recognized the need for such an intermodal capability in its requirements documents.[16] The *Air Force 2025* project determined that:

> Intermodality is a basic requirement for basic airlift systems. Cargo must be configured for direct transfer between air, land, sea, and space lift systems and operational use at delivery destination. Because we anticipate the requirement to transfer mili-

> tary cargo on commercial carriers of all mediums when possible, military payload configuration must comply with national and international standards. Through cooperative international development, these configurations also allow direct synergistic support among operational allied, coalition, and U.S. forces.[17]

An LBW cargo-handling system will greatly enhance intermodal operations. The ISO 20-foot container is becoming a more popular transport tool because it not only transfers readily to large truck beds but also is conducive to stacking, which saves precious volume aboard ships. An aircraft cargo-handling system with autonomous loading capability and prepositioned restraint devices on the cargo floor will increase efficiency and maximize throughput at transfer locations.

Enhanced cargo-handling system and SSTOL capabilities also integrate well with emerging naval concepts for offshore bases. This idea may become increasingly necessary as diplomatic clearances and access to foreign soil for military operations become more difficult. One such concept consists of a set of hinged, semisubmersible modules designed to accommodate both ships and aircraft. The length of the offshore base can be

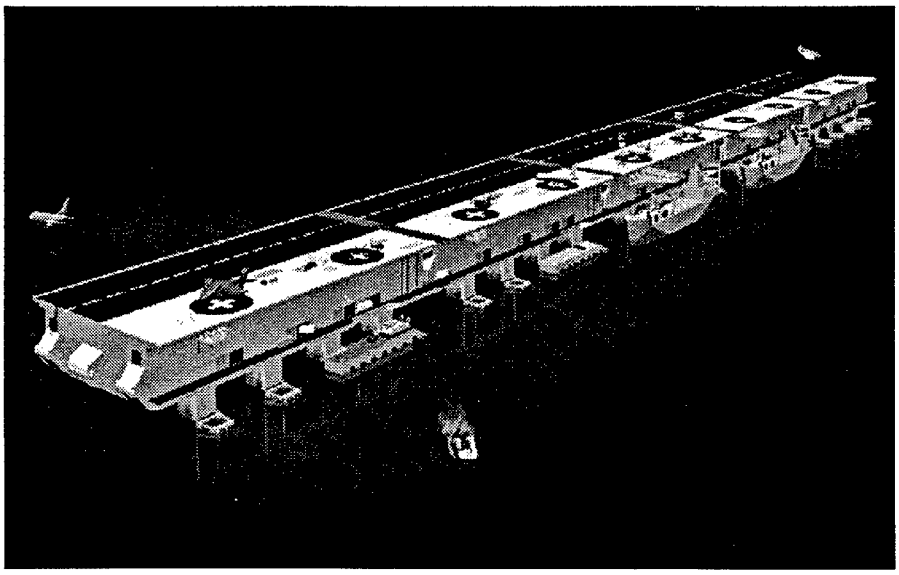

Source: This photo was extracted from a promotional brochure provided by McDermott, Inc. Permission for use was granted by Adm "Bat" LaPlante, McDermott, Inc., March 1999.

Mobile Offshore Base

adjusted to support the size and type of aircraft designed to operate through it. With each one-thousand-foot module currently estimated to cost approximately $1 billion, the advantage of SSTOL capability becomes readily apparent.[18]

Conclusions

For nearly a decade, victory in the cold war has allowed the United States to operate in the international environment as the sole superpower. This "strategic pause," to use the popular vernacular, presents a unique opportunity to "prepare now for an uncertain future" in support of the national security strategy.[19] The US Army has taken this opportunity to develop a new force structure and doctrinal concept to respond rapidly and decisively throughout the spectrum of conflict. The AAN vision is far-reaching in its implications. Many of its critical enablers such as information dominance, ultrareliability, and total logistical situational awareness are unproven concepts.[20] Despite this the AAN is an evolving concept; and even if the high-end goals are not attained, the spirit of the vision will be reflected in future doctrine. This change includes more reliance on information, dispersed forces, and increased dependence on maneuver.

As the Army system evolves, the theater airlift system supporting it must also change. New logistical challenges will emerge, placing increased importance on the principles of flexibility and survivability. Added to this, future theater airlift will become an element of combat maneuver more than ever before. This paper posits that increased emphasis will be required in developing four particular capabilities of a future theater airlift system: austere operations, cargo-handling capability, situational awareness, and defensive systems. From analysis of current capabilities shortfalls and alternative paths to meet the AAN requirements, this paper draws several conclusions. The following is a brief summary of those conclusions and areas for suggested further research:

1. Given the design information from the various systems under development, the tilt-wing aircraft best meets the AAN SSTOL needs. Its airfield performance provides the ability to deliver and pick up the tonnage of cargo re-

quired, better enabling it to function as a maneuver element. Further research involving a cost comparison between the tilt-wing and stealth ATT design would add value to this analysis.

2. The opportune landing system concept is critical to realizing the level of maneuverability the AAN desires. The necessity of diverting ground forces to conduct site surveys significantly inhibits the combatant commander's ability to orchestrate a move-strike-move campaign effectively. Further development of this technology might also provide the commander better information to analyze terrain more effectively when planning horizontal maneuver.
3. Given the operating environment for future theater airlift, an automated load-by-wire (LBW) cargo-handling system offers essential capabilities. Its versatility and autonomy provide rapid cargo-loading operations that enhance survivability of the aircrew, cargo, and supported ground forces. The ability to handle nearly any standard load type minimizes the need for external MHE. This provides cost savings as well as increased lift capacity as it frees up cargo space otherwise required for moving the external MHE. When coupled with a wide-body ATT, the LBW provides even more rapid cargo on-load/offload capability. In addition the ability to laterally transfer cargo in a "double-wide" compartment increases handling flexibility.
4. Situational awareness initiatives currently under way are adequate. The most important consideration in developing further systems is integration with the overall "information dominance" network.
5. Several variables cloud the issue for defensive systems, making the conclusions less clear. Stealth is a proven technology, and as such it is very attractive. The projected mission of an ATT is unique in that a significant portion of its mission is at low altitude, sometimes slow, and occasionally static on the ground. The resulting susceptibilities are not adequately addressed by stealth, although it is sure to help in the en route cruise portion of the mission. An offensive capability such as a directed-energy weapon would greatly enhance crew survivability. Since such a system is currently not operational, research into the costs and feasibility of fielding such a weapon on an ATT would greatly aid decision makers.

Research to explore the maintainability of stealth on aircraft operating in austere environments would also be very valuable.

Regardless of which type of platform or system is chosen, it is absolutely critical that tomorrow's systems be built to support tomorrow's missions. For the advanced theater transport platform, this means developing a new paradigm and measures of merit for mission accomplishment. If this paper has provided sharper focus and general direction to that end in any way, then it has served its purpose.

Notes

1. US Army Training and Doctrine Command (TRADOC) Pamphlet 525-66, *Future Operational Capability,* TC 97-004: Super Short Takeoff and Landing (SSTOL), n.d., n.p.; on-line, Internet, 6 March 1999, available from http://www-tradoc.army.mil/tpubs/pams/p525-66e.htm. Boeing ATT information released under the approval of Mike Rohrlick, ATT program manager, Boeing Co., Long Beach, Calif.

2. Lockheed Martin ATT information released under the approval of John Nichols, senior specialist engineer, Advanced Concepts Team, Smyrna, Ga.

3. Andrew Braunberg, "Parachute Guidance Empowers Programmed Payload Placement," *Signal,* May 1996, 83.

4. TRADOC, *Knowledge and Speed: Battle Force and the US Army of 2025, The 1998 Annual Report on the Army After Next Project to the Chief of Staff of the Army* (Fort Monroe, Va.: TRADOC, 1998), 27.

5. Jeffrey Record, *Determining Future U.S. Tactical Airlift Requirements* (Washington, D.C.: Pergamon-Brassey's International Defense Publishers, 1987), 36.

6. René J. Francillon, *McDonnell Douglas Aircraft Since 1920* (London: Putnam, 1979), 407, 467.

7. *AMMP: Air Mobility Master Plan* (Scott AFB, Ill.: AMC, 1997), 1–31.

8. *Joint Vision 2010* (Washington, D.C.: Joint Chiefs of Staff, 1995), 16.

9. TRADOC, *Knowledge and Speed 1998,* 27.

10. Ben R. Rich and Leo Janos, *Skunk Works: A Personal Memoir of My Years at Lockheed* (Boston: Little, Brown and Co., 1994), 69. Rich relates a story in which the protrusion of three screws of less than one-eighth inch above the low-observable surface showed up on radar "like a barn door."

11. R. V. Wible, "Technology and Design Considerations for an Advanced Theater Transport" in North Atlantic Treaty Organization, *Progress in Military Airlift* (France: AGARD, 1990), 19-7.

12. *New World Vistas, Air and Space Power for the 21st Century, Mobility Volume* (Washington, D.C.: USAF Scientific Advisory Board, 1995), 18.

13. Briefing slides by Lockheed Martin on ATT concept received 4 March 1999. The information is presented under the authorization of John Nichols, senior specialist engineer, Advanced Concepts Team, Smyrna, Ga.

14. "Airlift 2025: The First with the Most," *Air Force 2025 Final Report*, August 1996, n.p.; on-line, Internet, 14 March 1999, available from http://www.au.af.mil/au/2025.htm.

15. Interview with Mike Rohrlick, ATT program manager, Boeing Co., Long Beach, Calif. Information released under the authority of Mr. Rohrlick.

16. TRADOC Pamphlet 525-66, *Future Operational Capability*, TR 97-033: Sustainment Transportation, n.d., n.p.; on-line, Internet, 6 March 1999, available from http://www-tradoc.army.mil/tpubs/pams/p525-66e.htm.

17. "Airlift 2025: The First with the Most."

18. Briefing by Adm J. B. LaPlante, US Navy, Retired, from the McDermott Co., to the Air Mobility Symposium, Robins AFB, Ga., 29 January 1999.

19. United States, Executive Office of the President, *National Security Strategy for a New Century* (Washington, D.C.: The White House, October 1998), 23.

20. TRADOC, *Knowledge and Speed 1998*, 33, 28, 36.

Glossary

AAA	antiaircraft artillery
AAN	Army After Next
ABI	Airborne Battlefield Intelligence
ACSC	Air Command and Staff College
AFDD	Air Force Doctrine Document
AFMSS	Air Force Mission Scheduling System
AMC	Air Mobility Command
AMMP	Air Mobility Master Plan
AOE	Army of Excellence
APU	auxiliary power unit
ARSOF	Army Special Operations Forces
ATT	Advanced Theater Transport
AWE	advanced warfighting experiment
BRA	brigade rear area
CARP	computed air release point
CBR	California Bearing Ratio
CCT	combat control team
CDS	container delivery system
CM	countermeasure
CMDS	countermeasures dispense set
CONOPS	concept of operations
CONUS	continental United States
DARPA	Defense Advanced Research Projects Agency
DOD	Department of Defense
ECHS	enhanced cargo-handling system
ECM	electronic countermeasure
FLIR	forward-looking infrared
FLOT	forward line of own troops
FOD	foreign object damage
FY	fiscal year
GAO	Government Accounting Office
GDP	gross domestic product

GPO	Government Printing Office
GPS	global positioning system
HMMWV	high mobility multipurpose wheeled vehicle
HRAM	hardened random access memory
HUD	head up display
IIT	idea integration team
INSS	Institute for National Strategic Studies
IOC	initial operational capability
IR	infrared
ISO	International Standards Organization
ISR	intelligence, surveillance, and reconnaissance
JFC	joint force commander
JP	Joint Publication
JTAV	joint total asset visibility
kph	kilometers per hour
LAPES	low altitude parachute extraction system
LBW	load by wire
LO	low observable
MANPAD	man-portable air defense
MCR	multi-command regulation
MHE	materials handling equipment
MWS	missile warning system
NBC	nuclear, biological, and chemical
NVG	night vision goggles
OLS	opportune landing site
OMFTS	*Operational Maneuver from the Sea*
PCA	propulsion controlled aircraft
PLS	palletized loading system
RCR	runway condition reporting
RFI	request for information

RML	revolution in military logistics
RTIC	real-time-in-the-cockpit information
RTS	robotic transport system
SEAD	suppression of enemy air defenses
SSTOL	super short takeoff and landing
STOL	short takeoff and landing
TAV	total asset visibility
TRADOC	Training and Doctrine Command (Army)
UAV	unmanned aerial vehicle
USA	United States Army
USAF	United States Air Force
USGAO	United States General Accounting Office
V/STOL	vertical/short takeoff and landing
VTOL	vertical takeoff and landing
WMD	weapons of mass destruction

Bibliography

Books

Army Air Forces Evaluation Board. *An Evaluation of 14th Air Force Operations During 1944 with Due Consideration Given to the Logistical Problems Involved.* Army Air Forces Evaluation Board, 1945.

Bowen, Lee, et al. *USAF Airborne Operations: World War II and Korean War.* Washington, D.C.: USAF Historical Division, Liaison Office, 1962.

Craven, Wesley Frank, and James Lea Cate, eds. *The Army Air Forces in World War II.* Vol. 4, *The Pacific: Guadalcanal to Saipan, August 1942 to July 1944.* 1949. New imprint, Washington, D.C.: Office of Air Force History, 1983.

Deckert, W. H., and J. A. Franklin. *Powered-Lift Aircraft Technology.* Washington, D.C.: Scientific and Technical Information Division, National Aeronautics and Space Administration, 1989.

Douhet, Guilio. *Command of the Air.* 1942. Reprint, Washington, D.C.: Office of Air Force History, 1983.

Francillon, René J. *McDonnell Douglas Aircraft Since 1920.* London: Putnam, 1979.

Gansler, Jacques S. *Defense Conversion: Transforming the Arsenal of Democracy.* Cambridge, Mass.: MIT Press, 1995.

Hough, B. K. *Basic Soils Engineering.* New York: Ronald Press Co., 1957.

Jackson, Paul, ed. *Jane's All the World's Aircraft 1997–1998.* Alexandria, Va.: Jane's Information Group, 1997.

Johnson, Stuart E., and Martin C. Libicki. *Dominant Battlespace Knowledge.* Revised ed., Washington, D.C.: Institute for National Strategic Studies, April 1996.

Mason, Herbert A., Randy G. Bergeron, and James A. Renfrow. *Operation THURSDAY: Birth of the Air Commandos.* Washington, D.C.: Air Force History and Museums Program, 1994.

Miller, Charles E. *Airlift Doctrine.* Maxwell Air Force Base (AFB), Ala.: Air University Press, March 1988.

Mondey, David, ed. *The International Encyclopedia of Aviation;* assistant compiler, *Jane's All the World's Aircraft.* New York: Crown, 1977.

———. *Jane's All the World's Aircraft.* New York: Crescent, 1988.

Motsek, Col Gary J., USA. "Logistic Support to the Army After Next Warfighters: A Time for Fundamental Change," in *AY 97 Compendium Army After Next Project.* Edited by Douglas V. Johnson II. Carlisle Barracks, Pa.: Strategic Studies Institute, 1998.

Peers, William R., and Dean Brelis. *Behind the Burma Road: The Story of America's Most Successful Guerrilla Force.* Boston: Little, Brown and Co., 1963.

Prouty, R. W. *Helicopter Aerodynamics.* Potomac, Md.: Phillips Publishing, 1985.

Record, Jeffrey. *Determining Future U.S. Tactical Airlift Requirements.* Washington: Pergamon-Brassey's International Defense Publishers, 1987.

Rich, Ben R., and Leo Janos. *Skunk Works: A Personal Memoir of My Years at Lockheed.* Boston: Little, Brown and Co., 1994.

Skorupa, John A. *Self-Protective Measures to Enhance Airlift Operations in Hostile Environments.* Maxwell AFB, Ala.: Air University Press, 1989.

US Bureau of the Census. *Statistical Abstract of the United States,* 101st ed. Washington, D.C.: Government Printing Office (GPO), 1980.

———. *Statistical Abstract of the United States,* 118th ed. Washington, D.C.: GPO, 1998.

Electronic Publications

Air Force Doctrine Document 2-6. *Air Mobility,* 24 February 1999. On-line. Internet, 14 March 1999. Available from http://www.hqafdc.maxwell.af.mil/Library/Doctrine/afdd2-6.pdf.

"Air Force Technology—V-22 Osprey—Medium Lift Multi-mission Tilt-Rotor Aircraft," n.d., n.p. On-line. Internet, 11 March 1999. Available from http://www.airforce-technology.com/projects/osprey/index.html.

Air Mobility Command. "Combat Operations." *1998 Air Mobility Master Plan Update*, n.d., n.p. On-line. Internet, 10 March 1999. Available from http://public.scott.af.mil/hqamc/about/ammp/EQUIPMNT/8_AMCwep/4_C_130.htm.

———. "Operations." *1998 Air Mobility Master Plan Update*, n.d., n.p. On-line. Internet, 10 March 1999. Available from http://public.scott.af.mil/hqamc/about/ammp/ROADMAPS/24_ds.htm.

"Army Technology—CH-47D/MH-47E Chinook—Heavy Lift Helicopter." n.d., n.p. On-line. Internet, 11 March 1999. Available from http://www.army-technology.com/projects/chinook/index.html.

Chapman, Anne W., et al. "Prepare the Army for War: A Historical Overview of the Army Training and Doctrine Command, 1973–1998," chap. 6, "Doctrinal Renaissance," 1998, n.p. On-line. Internet, 23 February 1999. Available from http://www.tradoc.army.mil/historian/pubs/TRADOC25/chap6.htm.

"Characteristics of Force XXI Operations." *Land Combat in the 21st Century*, n.d., n.p. On-line. Internet, 24 February 1999. Available from http://www-tradoc.army.mil/text/landcmbt.htm.

Director, Operational Test and Evaluation, Office of the Secretary of Defense. *V-22 Osprey FY97 Annual Report*, n.d., 2. On-line. Internet, 10 March 1999. Available from http://www.dote.osd.mil/reports/FY97/navy/97mv22.html.

"Engine Gallery —F117-PW-100," n.d., n.p. On-line. Internet, 10 March 1999. Available from http://www.pratt-whitney.com/engines/gallery/f117.html.

Hanna, Mark. "Task Force XXI: The Army's Digital Experiment," in *Strategic Forum*, July 1997, n.p. On-line. Internet, 17 February 1999. Available from http://www.ndu.edu/inss/strforum/forum119.html.

Institute for National Strategic Studies. "Adapting Forces," *1998 Strategic Assessment: Engaging Power for Peace*. n.d., n.p. On-line. Internet, 6 March 1999. Available from http://www.ndu.edu/inss/sa98/sa98ch15.html.

Joint Chiefs of Staff, J-4. *Information Fusion*, J-4 Projects. n.d., 2. On-line. Internet, 6 March 1999. Available from http://www.dtic.mil/jv2010/focuslog.pdf.

"Land Forces." *Strategic Assessment 1996: Elements of U.S. Power.* n.d., n.p. On-line. Internet, 23 February 1999. Available from http://www.ndu.edu/inss/sa96/sa96ch14.html#sub-head2.

Robertson, Charles T., Jr. "Keynote Address to the Airlift/Tanker Association," 24 October 1998, n.p. On-line. Internet, 6 March 1999. Available from http://public.scott.af.mil/hqamc/speeches/ata_98.htm.

Tilford, Earl H. Comments. *National Defense into the 21st Century: Defining the Issues*, 6 June 1997, n.p. On-line. Internet, 22 February 1999. Available from http://carlisle-www.army.mil/usassi/ssipubs/pubs97/natdefns/defn-sp2.htm.

USAF. "Airlift 2025: The First with the Most," *Air Force 2025 Final Report*, August 1996, n.p. On-line. Internet, 14 March 1999. Available from http://research.maxwell.af.mil.

US Army Training and Doctrine Command. *Knowledge and Speed: The 1997 Annual Report on the Army After Next Project to the Chief of Staff of the Army*, July 1997, n.p. On-line. Internet, 23 February 1999. Available at "Papers" from http://www.tradoc.army.mil/dcsdoc/fbdaan/aamframe.htm.

———. Pamphlet 525-66, *Future Operational Capabilities*. n.d., n.p. On-line. Internet, 6 March 1999. Available from http://www-tradoc.army.mil/tpubs/pams/p525-66e.htm.

Manuals and other Publications

Joint Publication (JP) 3-0. *Doctrine for Joint Operations*, 1 February 1995.

JP 4-0. *Doctrine for Logistic Support of Joint Operations*, 27 January 1995. *Joint Vision 2010*, 1995.

Multi-Command Regulation 55-130, Vol. 1, *C-130 Operations*, 15 April 1993.

———. Vol. 2, *C-130 Tactical Operations*, 1 August 1993.

Robins Air Logistics Center. TO 1C-130H-1, *C-130H Operations Manual*, October 1998.

———. TO 1C-130H-1-1, *C-130H Performance Manual*, May 1986.

Wright–Patterson AFB (WPAFB), Ohio. TO 1C-17A-1-1, *Performance Manual*, 15 August 1995, change 8, 1 September 1998.

Periodicals

"Aerospace Source Book: Rotary-Wing Outlook/Specifications." *Aviation Week & Space Technology*, 11 January 1999, 76–83.

Braunberg, Andrew C. "Parachute Guidance Empowers Programmed Payload Placement." *Signal*, May 1996, 83–85.

Braybrook, Roy. "New Technology Transports and Tankers." *Armada International*, May 1997, 34–48.

Cook, Nick. "Shielding the Airlifters." *Interavia*, October 1997, 41–44.

———. "Airlift Picture Coming into Focus." *Interavia*, November 1988, 48–51.

Dunlap, Charles J. "21st Century Land Warfare: Four Dangerous Myths." *Parameters*, Autumn 1997, 27–37.

Evers, Stacey. "USAF Special Ops Seeks Stealthy VTOL." *Jane's Defence Weekly*, 23 April 1997, 26–27.

Ferris, Stephen P., and David M. Keithly. "21st-Century Logistics: Joint Ties That Bind." *Parameters*, Autumn 1997, 38–49.

Garret, Stephen F. "Synchronizing Battlefield Logistics." *Military Review*, March–April 1997, 19–22.

Gregory, Bill. "Revolution in Army Logistics." *Armed Forces Journal International*, October 1998, 18–20.

Haas, Peter M. "Palletized Loading System: Not Just Another Truck." *Army Logistician*, September–October 1996, 14–20.

Hall, David H. "Integrated Survivability Assessment: Measuring the Balance." *Aircraft Survivability*, Spring 1998, 12–14.

Hershman, Mark Shane, et al. "Tactical Versus Strategic Role of the C-17: An Analysis of Operation Joint Endeavor." *Air Force Journal of Logistics*, Summer 1998, 30–31.

Hewish, Mark. "A Precision Job: Stand-off Delivery in Air Drop Increases Survivability." *International Defense Review*, October 1995, 71–73.

———. "Surviving a SAM Attack." *Jane's International Defense Review*, June 1996, 61–66.

House, John M. "The Enemy After Next." *Military Review*, March–April 1998, 22–27.

Killebrew, Robert. "The Army After Next: Defining Future Landpower Challenges." *Army*, February 1998, 23–28.

———. "The Army After Next: TRADOC's Crystal Ball Eyes the Service's Shape Beyond Force XXI." *Armed Forces Journal International*, October 1996, 38–45.

Meyer, Linda P. "Increasing Situational Awareness in Air Mobility Command Aircraft." *Airlift/Tanker Quarterly*, Winter 1998, 19.

Morrocco, John D. "Europe Struggles to Fill Airlift Capability Gap." *Aviation Week & Space Technology*, 11 May 1998, 68–70.

Nash, Trevor. "Military Transport Aircraft—Size, Shape and Suitability." *Military Technology*, May 1991, 12–14.

Sherman, Jason. "21st Century Tank." *Armed Forces Journal International*, October 1996, 46–51.

Shine, Alexander P. "Theater Airlift 2010." *Airpower Journal*, Winter 1988, 4–19.

Wilson, Johnnie E. "The New Millenium: Getting There from Here." *Army*, February 1999, 19–24.

Reports

Bailey, Scott M. "60,000 Pound (60K) Linked and 110,000 Pound (110K) Sequential Platform Low Velocity Airdrop (LVAD): Follow-on Operational Test and Evaluation (FOT&E) of the C-17 Aircraft." Fort Dix, N.J.: Air Mobility Command (AMC), Air Mobility Warfare Center, 33d Flight Test Squadron, 1998.

Bennett, Andrew W., and James F. Gibson. "Technologies for Airlift Cargo Handling (TACH): Application Study." WL-TR WPAFB, Ohio: Wright Laboratory, November 1994.

Bennett, A. W., and C. L. Wood. "Precision Airdrop System Development." WPAFB, Ohio: Air Force Materiel Command (AFMC), March 1996.

Bennett, Gerald, et al. "Tactical Airlifter Survivability in a Non-radar Threat Environment." WPAFB, Ohio: Air Force

Systems Command, Aeronautical Systems Division, January 1987.

Bouras, Peter, and Pamela A. Melroy. "C-17A Unpaved and Matted Runway Operations." Report no. AFFTC-TR-95-22. Edwards AFB, Calif.: Air Force Flight Test Center, October 1995.

Bray, Johnny W. "Information Dominance—Can We Afford It?" Research paper. Maxwell AFB, Ala.: Air Command and Staff College, 1997.

Chisman, R. S., et al. "Future Theater Airlift Studies: Two-Versus Four-Engine STOL Transport." Wright-Patterson AFB, Ohio: Aeronautical Systems Center, AFMC, March 1993.

Cleary, Rodney L., and Franklin L. Spear III. "C-17 Crew Armor Protection." Report no. T/WR 96-02. Fort Dix, N.J.: AMC, Air Mobility Warfare Center, 33d Flight Test Squadron, 1997.

Gates, Jeffrey E. "C-17 Defensive System (DS) 1553B Bus Interface: Combined Developmental/Operational Test and Evaluation (D/OT&E), Detailed Test Plan." T/WR 98-02. Fort Dix, N.J.: AMC, Air Mobility Warfare Center, 33d Flight Test Squadron, 1998.

Geyser, Michael J. "Mobile Microwave Landing System (MMLS) for Austere Airfield Operations: Tactics Development and Evaluation." Fort Dix, N.J.: AMC, Air Mobility Warfare Center, 33d Flight Test Squadron, 1999.

Gibson, James F. "Technologies for Airlift Cargo Handling (TACH)." WL-TR WPAFB, Ohio: Wright Laboratory, May 1993.

"Intratheater Airlift: Information on the Air Force's C-130 Aircraft: Report to the Honorable John McCain, U. S. Senate." Washington, D.C.: GAO, 1998.

Iya, Sridhar K., Heinz Gassert, and George J. Burmeister. "Technologies for Airlift Cargo Handling (TACH)." WL-TR WPAFB, Ohio: Wright Laboratory, May 1993.

Jiavaris, M. "C-17A Globemaster III Compatibility with the Expeditionary Airfield System." Report no. NAWCADLKE-MISC-48J200-0018. Lakehurst, N.J.: Naval Air Warfare Center, Aircraft Division, SE and ALRE In-Service Engineering Division, 1995.

Kamosa, Michael J., and Michael J. Welch. "Evaluation of C-17 Combat Offload Capabilities." Report no. AFFTC-TR-94-24. Edwards AFB, Calif.: Air Force Flight Test Center, October 1995.

Ling-Temco-Vought, Inc., *Applications of the C-142 V/STOL Transports.* Dallas, Tex., 1965.

Lopez, Miguel A., and Michael Dodson. "Evaluation of C-17A Cargo Loading and Transport, Ground and In-flight Reconfiguration and Troop Transport Capabilities." AFFTC-TR-93-34. Edwards AFB, Calif.: Air Force Flight Test Center, March 1994.

McCarthy, J. M., and F. M. Rudolph. "Autonomous Landing Guidance." WPAFB, Ohio: Wright Laboratory, December 1992.

McGee, John E. "Augmentor Wing Powered Lift Technology: Affordable Alternatives to Enhance Tactical Airlift Capability." Report no. AU-AWC-86-143. Maxwell AFB, Ala.: Air War College, 1986.

Martin, Eric J., and Scott M. Cone. "A Heads-Up Display Symbology Evaluation for an Autonomous Landing Guidance System." WL-TR #96-3104. WPAFB, Ohio: AFMC, May 1996.

Miles, W. L., et al. "Assault Transport Crew System Development." WL-TR WPAFB, Ohio: AFMC, July 1992.

Mohr, Dave, et al. "Air Cargo Containerization Study." Maxwell AFB–Gunter Annex, Ala.: Air Force Logistics Management Center, December 1991.

Rohrlick, Mike A., and Blaine Rawdon. "Advanced Cargo Restraint System (ACRS) Project." WPAFB, Ohio: Wright Laboratory, July 1994.

Sewell, A. "Advanced Theater Transport VSTOL and Super STOL Technology Integration and Assessment." WPAFB, Ohio: Wright Laboratory, 30 May 1991.

Society of Experimental Test Pilots. *Proceedings 1997: Forty-First Symposium Proceedings.* Lancaster, Calif.: Society of Experimental Test Pilots, 1997.

———. *Proceedings 1998: Forty-Second Symposium Proceedings.* Lancaster, Calif.: Society of Experimental Test Pilots, 1998.

Taylor, Joe G. *Air Supply in the Burma Campaigns.* Maxwell AFB, Ala.: USAF Historical Division, Research Studies Institute, Air University, 1957.

United States Air Force. AMC. *AMMP: Air Mobility Master Plan.* Scott AFB, Ill., 1997.

United States Army Combined Arms Combat Developments Activity. "Advanced Medium STOL Transport (AMST) Study." Fort Leavenworth, Kans.: 1977.

United States Army Training and Doctrine Command (TRADOC). *Knowledge and Speed: Battle Force and the U.S. Army of 2025: The 1998 Annual Report on the Army After Next Project to the Chief of Staff of the Army.* Fort Monroe, Va.: TRADOC, 1998.

United States Scientific Advisory Board. *New World Vistas: Air and Space Power for the 21st Century.* 16 vols. Washington, D.C.: USAF Scientific Advisory Board, 1995.

United States. Executive Office of the President. *National Security Strategy for a New Century.* Washington, D.C.: The White House, October 1998.

Unpublished Papers

"Configuration Integration for Large Multi-purpose Aircraft." WPAFB, Ohio: Air Force Wright Aeronautical Laboratories, September 1985.

Davis, Michael P. "Low Altitude Parachute Extraction System Approach to Extraction Zone Procedures." Scott AFB, Ill.: AMC, June 1993.

Donoho, James H. "An Analysis of Tactical Military Airlift." Master's thesis, WPAFB, Ohio: Air Force Institute of Technology (AFIT), 1997.

Haven, Douglas L. "The Newest Seamless Airlifter: The C-130J-30." Graduate research paper, WPAFB, Ohio: AFIT, 1998.

Helmeth, R. E., et al. "Analysis of Tactical Transportation: Progress and Challenges." Paper for Defense Systems Management College, 1988.

Hunter, George F. "An Analysis of V/STOL Heavy Lift Logistics for the 1970's." Maxwell AFB, Ala.: June 1968.

Johnson, Charles. "Acquisition of the C-17 Aircraft: A Historical Account." Maxwell AFB, Ala.: Air University, 1986.

King, Robert J. "An Analysis of the Future Requirements for Materials Handling Equipment in the Military Airlift Command." Master's thesis, WPAFB, Ohio: AFIT, 1987.

Koger, John J. "An Analysis of Tactical Airlifter Characteristics and Their Impact on Theater Airlift System Performance." Master's thesis, WPAFB, Ohio: AFIT, March 1993.

LeCroy, Roy C. "Implications of Changing Combat Doctrine and Evolving Threats on Future Tactical Airlifter Requirements." Maxwell AFB, Ala.: Air War College, 1985.

McHalek, Edward D. "An Analysis of Tactical Airlift and Aerial Re-supply." Maxwell AFB, Ala.: June 1967.

Nickles, Keith E. "Global Reach and Air Cargo Operations: A Study in Materials Handling Equipment (MHE) Requirements." Graduate research paper, WPAFB, Ohio: AFIT, 1996.

North Atlantic Treaty Organization. "Progress in Military Airlift" Flight Mechanics Panel Symposium. France: AGARD, 1990.

Riley, John Denny. "Airborne Invasion of Burma; Spring, 1944." Master's thesis, University of Oklahoma, 1965.

Silver, Michael Alan. "Theater Airlifter Survivability on the Ground." Master's thesis, WPAFB, Ohio: AFIT, March 1993.

Trainor, John W. "A Wind Tunnel Study of a Sting-mounted Circulation Control Wing." Master's thesis, WPAFB, Ohio: AFIT, December 1989.

USAF Test Pilot School. "Performance Flight Testing Phase, Subsonic Aerodynamics." Edwards AFB, Calif.: Air Force Flight Test Center, November 1992.

"V/STOL Aircraft Characteristics Affecting Behavior of Supporting Surfaces." Miscellaneous paper, Vicksburg, Miss.: Water Experiment Station, July 1967.

Paradigm Lost

Rethinking Theater Airlift to Support the Army After Next

Air University Press

Chief Editor
Hattie D. Minter

Copy Editor
Rita B. Mathis

Book Design and Cover Art
Daniel M. Armstrong

Composition and Prepress Production
Linda C. Colson

AU PRESS

ISBN: 1-58566-084-1