STRATEGY RESEARCH PROJECT

The views expressed in this paper are those of the author and do not necessarily reflect the views of the Department of Defense or any of its agencies. This document may not be released for open publication until it has been cleared by the appropriate military service or government agency.

"OPERATION ALBA": A EUROPEAN APPROACH TO PEACE SUPPORT OPERATIONS IN THE BALKANS

BY

COLONEL RICCARDO MARCHIÓ
Italian Army

DISTRIBUTION STATEMENT A:
Approved for Public Release.
Distribution is Unlimited.

USAWC CLASS OF 2000

U.S. ARMY WAR COLLEGE, CARLISLE BARRACKS, PA 17013-5050

20000613 131

DTIC QUALITY INSPECTED 4

USAWC STRATEGY RESEARCH PROJECT

"OPERATION ALBA": A EUROPEAN APPROACH TO PEACE SUPPORT OPERATIONS IN THE BALKANS

by

COL Riccardo Marchio'
(Italian Army Infantry)

CAPT Thomas Arminio
Project Advisor

The views expressed in this academic research paper are those of the author and do not necessarily reflect the official policy or position of the U.S. Government, the Department of Defense, or any of its agencies.

U.S. Army War College
CARLISLE BARRACKS, PENNSYLVANIA 17013

DISTRIBUTION STATEMENT A:
Approved for public release.
Distribution is unlimited.

ABSTRACT

AUTHOR: Riccardo Marchio'

TITLE: "OPERATION ALBA": A EUROPEAN APPROACH TO THE PEACE SUPPORT OPERATIONS IN THE BALKANS

FORMAT: Strategy Research Project

DATE: 10 April 2000 PAGES: 27 CLASSIFICATION: Unclassified

In March 1997 the economic and social situation in Albania degenerated severely and plunged the country into chaos. In order to avoid a civil conflict in that country, the UN Security Council approved Resolution 1011 for the dispatch of a multinational military contingent with the objective of restoring the living conditions in Albania and the expeditious delivery of humanitarian aid to the population.
The 7,000-person strong multinational security force led by Italy to help restore order and secure safe elections, deployed in April 1997.Italian forces completed their withdrawal on 12 August.

This operation, in which 11 European countries took part, enabled democratic elections to take place and the resumption of control by governmental institutions. This paper examines the causes of this crisis, the reaction of the European countries, the development of such an operation, its effects on the situation in the Balkans, and provides some evaluations on the conduct of the operation from a military point of view. The paper is divided into five sections that will cover the following issues:
Political and social situation in Albania in 1997
Conditions for the deployment of a multinational force
Conduct of "Alba Operation"
Consequences
Evaluations on the conduct of the military operation and conclusion.
Total pages number: 27

TABLE OF CONTENTS

ABSTRACT iii

PREFACE vii

LIST OF ILLUSTRATIONS ix

"OPERATION ALBA": A EUROPEAN APPROACH TO PEACE SUPPORT OPERATIONS IN THE BALKANS 1

Political and social situation in Albania in 1997 1

Conditions for the deployment of a multinational force 2

Conduct of "Alba Operation" 5

Consequences 8

Evaluation on the conduct of the military operation and conclusion 10

ENDNOTES 15

BIBLIOGRAPHY 17

PREFACE

The crisis in Albania began with the disputed parliamentary elections of May/June 1996. Most of the mainstream opposition parties, led by the Socialists, accused the authorities of involvement in large-scale electoral fraud and refused to accept the results which gave President Sali Berisha's Democratic Party a landslide victory. Their subsequent boycott of parliament led to a breakdown in the political dialogue which the Organization for Security and Cooperation in Europe (OSCE) and the Council of Europe tried in vain to overcome by encouraging round table discussions.

The failure of the international community to prevent what was to turn into violent conflict was due mainly to the intransigence of Albanian politicians, particularly those in the Berisha administration. But some of the responsibility belongs to the international community itself which lacked unity, firmness of purpose, and sometimes even awareness of what was happening in Albania. This undermined the various conciliation efforts.

By the time the financial pyramid schemes began to fail early in 1997, Albania had no functioning democratic institutions or a forum through which the mounting public discontent could be channeled. The result was a series of spontaneous and increasingly violent demonstrations that turned into riots and finally into an uprising. This time the international response was swift. The OSCE dispatched former Austrian Chancellor Franz Vranitzky to Albania within days of the outbreak of the uprising in early March. By mid-April an 11-nation Multinational Protection Force (FMP), under Italian command, was being deployed to Albania.

LIST OF ILLUSTRATIONS

FIGURE 1 3

FIGURE 2 4

FIGURE 3 5

"OPERATION ALBA": A EUROPEAN APPROACH TO PEACE SUPPORT OPERATIONS IN THE BALKANS

Political and social situation in Albania in 1997

In the years of isolation under Communist dictatorship, Albania had subscribed to a system of "total defense" with several thousand pillboxes sprinkled throughout the country. Additionally a large portion of the population was equipped with arms, and Albania possessed disproportionately large armed forces for the size of the population and the resources of the country.

The post-Communist government of Albania committed itself to democratic reform and began immediately to orient itself towards Western institutions, including joining the North Atlantic Cooperation Council (NACC) in 1992. Albania was the tenth CEE (Central and Eastern Europe) country to join Partnership for Peace (PfP),[1] in February 1994, stating that its ultimate strategic goal was membership in NATO. It undertook a radical restructuring and reorganization of its armed forces and sent many officers to Western military institutions. Albania also made facilities available to support UN and then NATO-led operations in former Yugoslavia.

In early 1997, Albania underwent a profound crisis, sparked by the frustration of hundreds of thousands of people who lost their life's savings by investing in "pyramid" investment schemes. The violent outbursts in many parts of the country gradually led, especially in the south, to the collapse of state authority and the establishment of revolutionary committees in local communities. Many criminal elements also took advantage of the chaotic situation.

A large part of the population was equipped with arms as part of the total defense concept and open confrontation with the armed forces, often themselves victims of the collapsed pyramid schemes, gradually increased. In many cases conscripts, who simply went back home, left most military installations prey to the theft of arms and ammunition abandoned by military units.

At the beginning of March the protest of the population "defrauded" by the pyramids, exploded in a revolt in Valona that resulted in ten deaths. The protest stretched to the North of the country and President Berisha disbanded the Government and the former mayor of Argirokaster, Bashkim Fino, was nominated Prime Minister. The situation was extremely serious and on March 3 the Italian General Defense Staff, at the request of the State Department, began the non-combatant evacuation (NEO) of fellow countrymen from Albania. The operation, coordinated with the Italian embassy in Tirana, resulted in the evacuation of 16 Italians and 19 foreigners. On the days following, 8 -10 March, two other operations evacuated 43 additional countrymen. On 13 and 14 March despite further attempts from European diplomats (meeting with the Italian Ambassador in Tirana along with the committee of rebels that controlled Valona[2] and the mediation by the Dutch Foreign Minister Hans Van Mierlo), the situation worsened. As a result of another NEO more than 1,000 people were evacuated from Albania.[3] In the

same period the flow of illegal immigrants was also relevant. According to the Department of the Interior, over 10,500 Albanian citizens had already illegally moved to Italy. Since 1994 the Italian Armed Forces had deployed naval aviation patrols to control the illegal immigration in the lower Adriatic. On 25 March, the Italian and Albanian Governments signed a bilateral agreement for the control of illegal immigration. According to this act, Italy considered a "friendly country," was authorized to patrol Albanian territorial waters in order to, prevent Albanian citizens from escaping prosecution by the Albanian justice system, and to prevent illegal immigration to Italy.[4]

Conditions for the deployment of a multinational force

At that time the situation in Albania was extremely critical and the possibility that a civil war could break out was very real. Following further pressures by Italian diplomats on European countries, on March 27, the Permanent Council for the Security and the Cooperation in Europe (OSCE), established to constitute a structure of coordination for the action of other international organizations.[5] The same day the Italian Representative to the United Nations sent a letter to the Secretary General proposing the formation of a multinational protection force to facilitate the prompt delivery of humanitarian assistance (on 21 March the Italian Foreign Minister had signed an agreement to provide humanitarian relief to Albania) and to help to create a secure environment for the mission of international organizations. On 28 March, the Albanian Representative to the United Nations sent a letter of request for the intervention of a multinational force in Albania in order to support Albanian institutions and to secure the delivery of humanitarian assistance in the country.

The same day the Security Council passed UNSCR 1101 with a unanimous vote. China abstained, but did not use its veto power. The Security Council authorized, "to establish a temporary and limited multinational protection force to facilitate the safe and prompt delivery of humanitarian assistance, and to help create a secure environment for the missions of international organizations in Albania, including those providing humanitarian assistance."[6] That Resolution clearly stated that the mission, authorized under Chapter VII of the UN Charter, had to be conducted in a "neutral" and "impartial" way considering impartiality and neutrality as fundamental principles of UN peacekeeping operations. These principles notwithstanding, the UN has traditionally been reluctant to use forces from neighboring powers or from states with special interests in the conflict for its peacekeeping operations. That could obviously be considered the case here with Italy and Greece; but it also had to be considered that in 1991-1993 Italy already conducted another successful humanitarian operation in Albania ("Pellicano Operation") gathering experience and knowledge related to that country from both the military and political point of view. Besides, the use of military personnel to establish a secure environment for the delivery of humanitarian assistance was typical of the peacekeeping operations in Somalia and in Bosnia. In both cases, however, the warring factions did not perceive delivery of assistance as "impartial," and military forces ended up

becoming embroiled in the conflict. This obviously produces a spiral effect, which threatens to destroy the objectives of the mission. In fact, the use of force by the peacekeepers may undermine the perception of their impartiality and the peacekeepers run the risk of being perceived as an additional belligerent party and could become a target for retaliation.

Eventually, eleven European countries accepted the "encouragement" of the UN and joined the FMP. The following troops were deployed: Italy: 3800; France: 950; Spain: 350; Turkey: 760; Greece: 800; Romania: 400; Denmark: 110; Austria: 60; Belgium: 15; Slovenia: 20. The total strength reached 7265. Figure 1 depicts FMP's land forces composition.

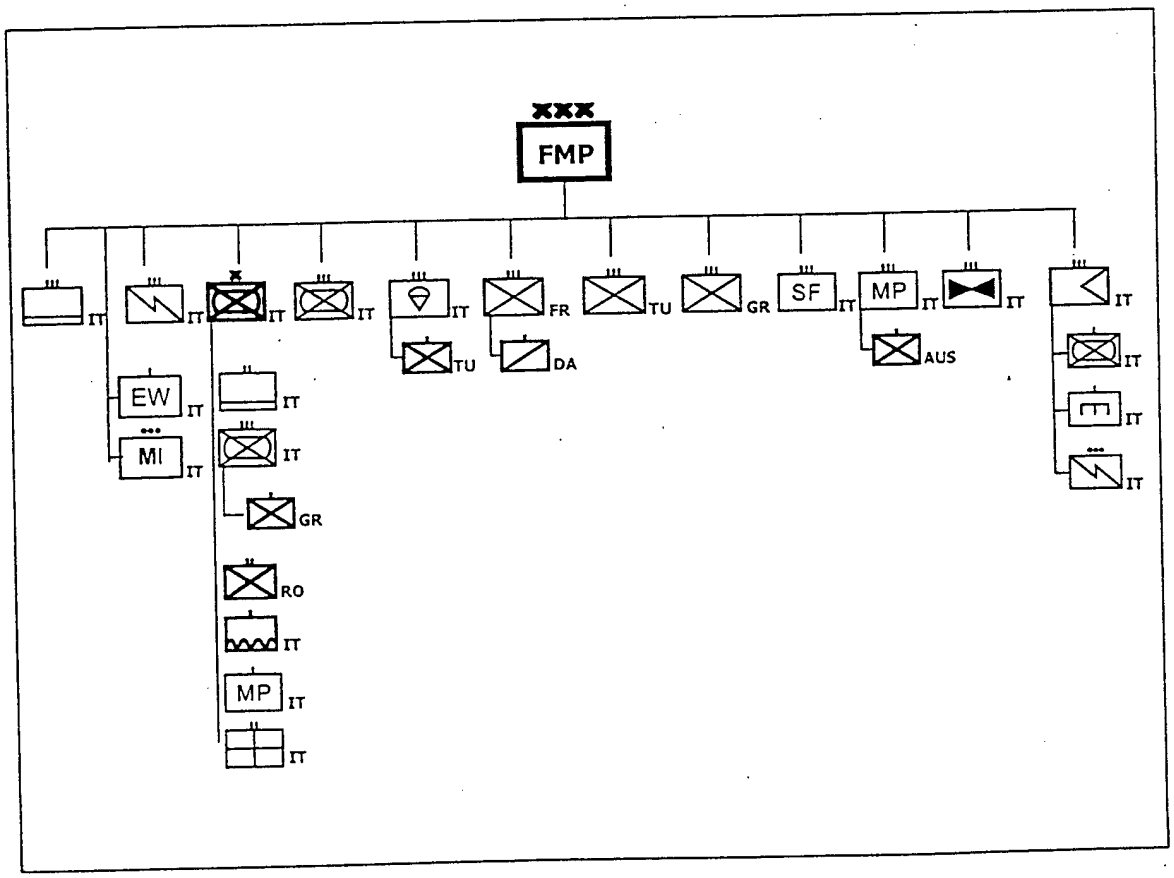

FIGURE 1

Because of the multinational composition of the force, the strength of the contingent itself, and the relationship of the troops made available by the contributing nations, the Command and Control structure was defined as "ad hoc" and was fully constituted only after the planning phase had already started. "Operation Alba" was the first operation conducted by the Italian Armed Forces after the approval of a new law in 1997 that radically changed the structure of the Italian top military authorities[7]. In this new organization, the Chief of Defense is responsible to the Minister for planning and employment of the

operational forces. The Chief of the Army, as well as the other Chiefs of the sister services, had the responsibility to provide the units and the logistic support to the operation for their respective forces.

For Operation Alba the political level of command and control was constituted by a "Steering Committee" based in Rome. It consisted of representatives of the Minister of Defense and Foreign Minister from contributing countries, as well as the military commander of the operation. As mentioned previously, the countries that contributed to the force were Austria, Denmark, France, Greece, Italy, Portugal, Romania, Slovenia, Spain, and Turkey. Representatives from the OSCE, EU, WEU, and the United Nations participated in the Steering Committee only as observers.

The Chief of Italian Defense had Operational Command of Italian forces and Operational Control (NATO OPCOM and OPCON respectively) of the contributing nations' forces. He executed his functions through a joint and combined C2 structure in Rome. This structure, called COFIA, (Comando Operativo Forze Intervento in Albania - Operational Command Intervention Forces in Albania), had a joint composition, but was principally a national headquarters reinforced by liaison teams from the contributing nations. The operational control of both the Italian and other nations' forces was delegated to the CINCNAV (Operational Navy Commander) for the first phase of the operation (initial deployment of ground forces) and after D+8 to the Commander 3rd Italian Army Corps (Land Component Commander). Figure 2 depicts the C2 structure as adopted.

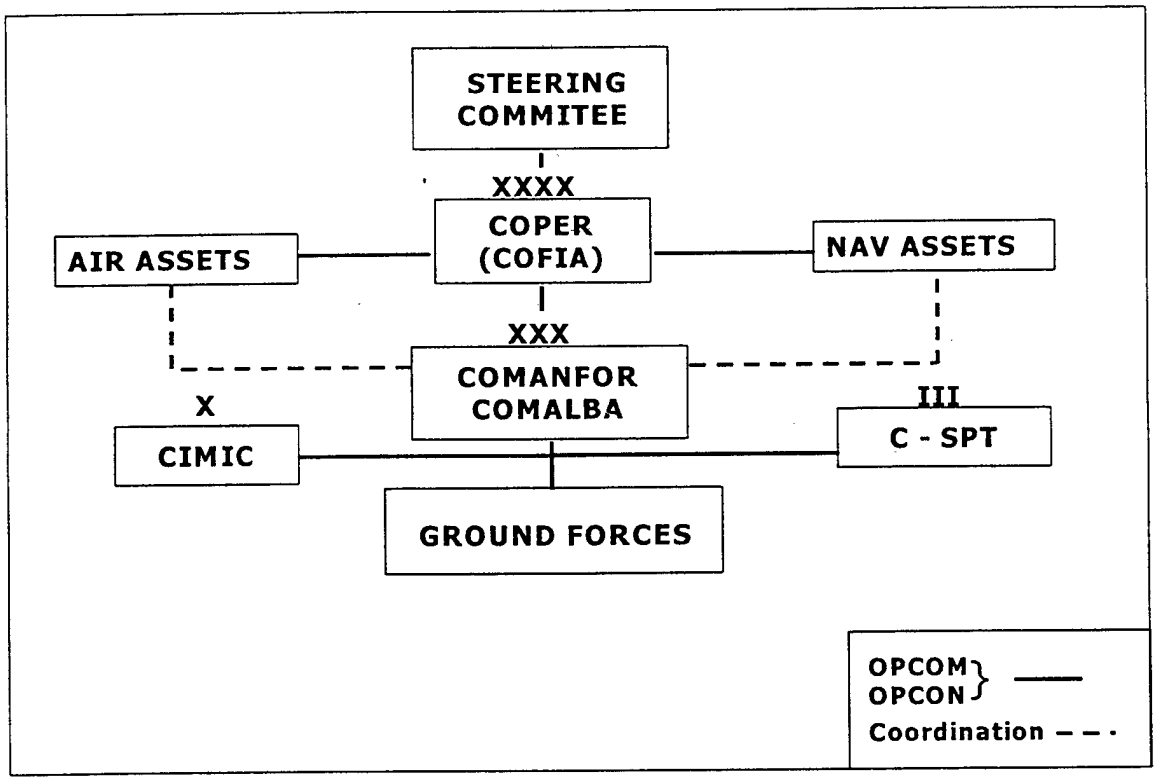

FIGURE 2

So, as for the Italian General Defense Staff, Operation Alba was the first occasion after the end of the WWII, to assume command of a joint and combined operation. And for the 3rd Italian Army Corps it was the first time that the staff composition had to be modified for assuming joint and combined operations. At the beginning, the nucleus of this staff was based on the 3rd Italian Division Activation Staff, a structure created in 1992 to interface with the NATO ARRC in its initial development phase. That small staff (about 40) was the only permanent multinational structure present in the Italian Army at that time and the only tactical Army structure used to plan in an international environment. The planning phase for the General Defense Staff and Services Staffs involved, started on 13 March. At the beginning there was no evidence of what could be the real multinational contribution. The Army Staff prepared different "national" options for the intervention from a Brigade level up to a reinforced Division (ranging from 5000 to 20000 troops). As the multinational contributions started to flow in, the national structure had to be modified and tailored to be balanced, especially in the Command and Control structure to accommodate the presence of different countries. The final result was a Joint and Combined staff based on 60 percent Italian Officers and 40 percent contributing nations. Figure 3 depicts the structure of FMP HQ.

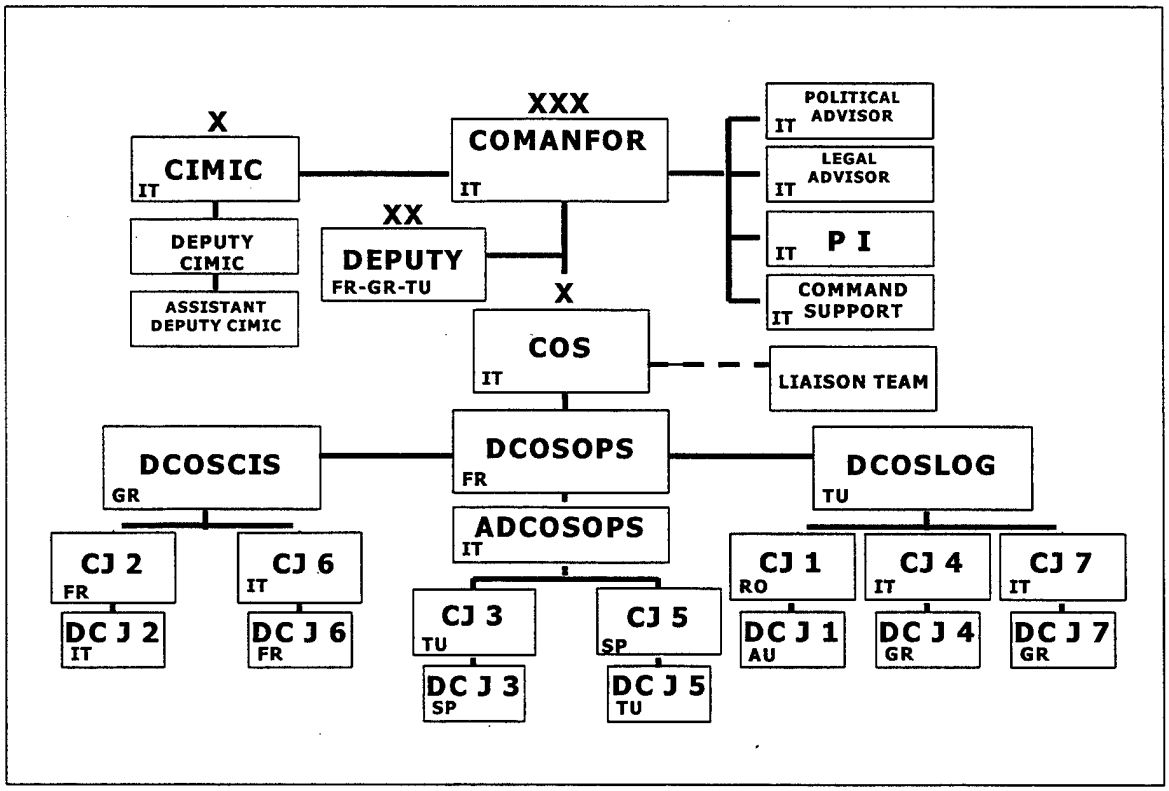

FIGURE 3

Conduct of "Alba Operation"

The mission officially started on April 15, 1997 (D-Day). It was preceded by dispatching a Joint and Combined Advanced Party, composed mainly of Special Forces units from different countries (France, Spain, Greece and Austria). It had the task to conduct reconnaissance of the areas, the maritime routes, the road axis, and the sensitive points for the arrival of the FMP forces (Main Body). Having completed this preliminary activity, the operation developed in three phases. The first phase (D–D+7) began April 15 with the arrival of the first Italian, French, and Spanish units in the port of Duress and Tirana airport. On April 22, this phase was concluded after the transfer of authority from the Navy Commander (CINCNAV) to the Commander of the 3rd Italian Army Corps. Commander, of the 3rd Army assumed the role of Land Component Commander and Theater Commander. The second phase (D+8–D+90) included the expansion and the consolidation of the multinational force with the aim to assure:

- Force protection and freedom of movement for the FMP units
- The control of the most important towns and villages in the country (Lezhe, S. Giovanni of Medua, Fier, Elbasan, Argirocastro, and Saranda)
- The protection of the OSCE mission (from D+7)
- A general secure environment in the areas where the GOs and NGOs were going to conduct humanitarian assistance.

The third phase (D+90 D+120) was redeployment.

From a military point of view Alba was very successful. There were no difficulties in implementing the plan and the results obtained throughout the operation were very satisfactory. The FMP carried out its mandate efficiently and responded to the challenge to ensure the timely and safe delivery of humanitarian aid. The presence of the Force had a highly positive impact on the lives of the local population. It provided a secure environment for civilian and humanitarian deliveries and for the work of the international agencies. Finally, the FMP provided security during the Albanian elections[8] in June and July 1997 in a neutral and impartial way and helped ensure tranquillity in the country, particularly at the polling stations.

The political relevance of the multinational force in Albania and the continuous presence of "national" interests in a multinational environment also characterized the operation. The most evident aspects were:

- Employment of national assets for "national assignments" in multinational context
- National objectives
- Countries neighboring or bordering the AOR.
- "Political" deployment and employment of the forces.

As examples of such behavior, the request by COFIA for employment of an Italian company operating under Spanish TACOM, for a mission of exclusive Italian national interest not specified in the UN mandate, and on the occasion of an intervention against illegal immigration in the zone of SHENGJIN (in the northern area of Albania). An order under these circumstances, transmitted exclusively on national

channels would surely have brought objections from the other participants, jeopardizing the delicate multinational equilibrium of the operation. In order to accomplish these tasks under such circumstances, it was decided to employ assets not assigned to the FMP. The FMP provided the Italian forces, which were usually in charge of this mission (essentially the ships and aircraft patrolling the Albanian territorial waters according to the agreement of March 25, 1997), the information of possible illegal immigration.

National objectives often caused "personalized" interpretations of the orders and specified tasks in the AOR, in order to cut out national spheres of influence within the coalition. For instance, one contingent favored the electoral campaign of a party in the South, another directed the distribution of humanitarian aid. Finally, because of the coexistence, in narrow spaces, of people from different ethnic groups, religions, and historical heritages, the employment of contingent forces from neighboring and bordering countries caused immediate responses. As a matter of fact:

- The deployment policy had to consider more critical ethnic and or religious aspects than operational evaluations (type of unit, its operational skill or logistic autonomy, etc.);
- Political rivalry or conflicting national interests sometimes imposed more political than military choices. At the tactical level, such a situation could determine conditions for a crisis at the strategic political level.

Despite the presence of such conditions, the operational activity of the FMP achieved the objective to guarantee a secure environment for the various organizations involved in the humanitarian assistance effort. In summary, the FMP conducted operational activity for:

- 1680 missions to escort the OSCE's teams during the electoral period;
- 260 missions to escort humanitarian convoys;
- Assured the security of 27 distribution points for humanitarian aid;
- 37 EOD teams conducted missions to ensure the security of camps and areas of interest for FMP;
- Crossed approximately 2,800,000 kilometers on the road, navigated 70,000 miles on the sea, flew 1300 hours of fixed wing aircraft and around 750 for helicopters.

Since the beginning of the Albanian crisis OSCE was strongly committed to intervention. This was a good test for the ability of that organization to address the new forms of instability in post Cold War Europe. In a short time, the OSCE established its presence in Albania in order to guide this country toward political stability and to promote national reconciliation.

Dr. Franz Vranitzky, former Chancellor of the Republic of Austria, was appointed as a Personal Representative of the OSCE Chairman-in-Office in Albania.[9] The OSCE, in co-ordination with other international organizations, established a presence in Tirana to provide, among other things, advice and assistance in election preparation and election monitoring. Experts from the Office for Democratic Institutions and Human Rights (ODIHR) joined the OSCE presence in Albania in early May to start the operation. In order to restore the stability and security in the country, it was essential to reorganize the

government structure and above all reinstate a democratically elected government, able to constitute a valid interlocutor with the International Community.

The process was difficult but, thanks to strong international pressure, an accord was reached on 9 May. According to this agreement the regular elections were a necessary condition to continue to receive any kind of humanitarian aid. Nevertheless, there were many attempts from the two largest political parties, the Socialist Party of Albania (SPA) and the Albanian Democratic Party (APD), to impose themselves into the electoral process. At a minimum they tried to slow it down. They also attempted to declare the illegality of Art. 11 of the electoral law and determine the closing hours of the polling stations.

The agreement for the elections required a renewal because, according to UNSCR 1101, it expired coincident with the elections. The Security Council Resolution 1114, of 19 June, provided the legitimacy for the extension to the FMP mandate. This document established the continuation of the mandate for an additional 45 days from 28 June 1997. The Resolution also considered the requirements to guarantee the safety of the OSCE monitoring activities for the elections.[10]

On election day, 29 June 1997, the ODIHR deployed 475 international observers from 32 countries to 106 of the 115 electoral zones. During the second round of elections on July 6, and the reruns in two zones on July 13, 160 and 20 observers, respectively, were deployed to cover all the zones being re-contested. On each election day, FMP provided security to the observer teams through direct escort or area security in the electoral districts. For the three rounds of the Albanian elections FMP supported the OSCE observer teams by hosting 1134 personnel in its compounds, delivering food rations, and employing about 4500 personnel. The ODIHR concluded that the Albanian Parliamentary Elections of 1997 were acceptable, given the prevailing circumstances in the country. This election process has to be viewed within the context of a conflict resolution process following the grave political crisis that preceded it, and which had immediate consequences for the election standards.

Consequences

After almost six months of political instability and general disorder, Albania apparently seemed much calmer and oriented to start the process of democratization. This was an uphill struggle that, up to now was desired but never achieved. The election of June 29 gave a jump-start to this process. Nevertheless, it is necessary to avoid generalizations and feelings of optimism created by international public opinion. There was still much to reflect upon. There were numerous issues that remained unresolved after the end of Alba. For example:

- Not only the ideological, but also the ethnic nature of the new government, ruled by an ex-communist and southern Prime Minister, could offer a valid pretext of resistance of Berisha supporters and perhaps generate violent opposition
- Another principal dilemma concerned the disarmament of the population and the armed gangs, as well as the reconstruction of the judicial and penitentiary systems. In regards to public order, the

violence of armed gangs diminished somewhat, but criminal activities were still taking place throughout the country albeit very diffused, and mainly in the central -southern zones.

- The economic situation of the country remained difficult due to lack of national resources and foreign investments.

In summary, such aspects represented the problems on which the principal international organizations had to, and still have to, focus their attention without embarrassing the Albanian government.

Obviously, some countries were more concerned with the situation than others. In particular, Italy and Greece had vested interests in Albania. Since the end of the Cold War successive Italian governments gave overt political and economic support to the Albanian government. Italy was, and still is, the principal trading partner of Albania, as well as its primary investor with 400 Italian companies employing more than 30,000 Albanians.[11] In addition, Italy faced the problem of refugees. Since the Albanian crisis began, thousands of refugees fled to Italy and the Italian government, recalling what happened in 1991, was anxious to stop the influx.

For those reasons Italy and Greece had the most interest in improving the ability of Albania to organize acceptable social and legal conditions and to defend and secure its territory. After the withdrawal of the FMP, both Italy and Greece left a number of officers behind to serve as advisers and to lay the groundwork for more systematic training and to help rebuild Albania's disintegrated armed forces. That was a huge task because even without the shattering impact of the year's events, Albania's 60,000-strong army and its 12,500-man navy and air force were poorly equipped and lacked motivation. The military cooperation agreement Albania signed with Italy in August 1997 envisaged the involvement of nearly 300 Italian military personnel, based in Tirana and Durres, helping to train Albanian military police and coastguard personnel, as well as giving advice on the protection of arms, depots, and ports. The program, worth $17 million, also included training in air defense, communications, and transport. There was also a rapid resumption of contacts with NATO for the purpose of defining a new individual Partnership for Peace program that would be tailored to Albania's specific needs.

From the economic point of view the international community also provided, after the initial military response, substantial support. The financial aid effort led by the EU and the World Bank acted as joint organizers of the Brussels Donors' Conference. Albania was given immediate emergency assistance of over $180 million with the promise of an additional $500 million as the first part of a substantial medium-term aid package. International aid officials described the sums promised as more than had been expected. The new Government moved quickly to reestablish macroeconomic control. Supported by a six-month program under the International Monetary Fund's (IMF) Post-Conflict Emergency Assistance Policy, the Government took important measures to reassert fiscal control[12]. The fiscal targets of the emergency program exceeded all expectations, which paved the way for the IMF's Enhanced Structural Adjustment Facility (ESAF) program approved in May 1998. Important measures were taken to wind

down the pyramid schemes, to reform the banking system, to improve the functioning of the social safety net, and to strengthen employment promotion opportunities.

Evaluation on the conduct of the military operation and conclusion

In recent years numerous worldwide crises have clearly demonstrated the increasing importance of MOOTW for the armed forces of individual countries, as well for alliances and coalitions. Operation Alba is clear evidence to support this statement, but at the same time represents an exception in the wide range of Peace Support Operations (PSO) in Europe. It is appropriate to divide the analysis into two parts. The first related to the conduct of the operation, considering what happened within the sphere of military capabilities discussed previously. The second related to the significance of such an operation conducted under a "coalition of the willing," but not sponsored by a major political or military alliance.

Some aspects that influenced the military side of Operation Alba have already been illustrated in previous sections, but others deserve to be examined. The first important analysis is related to the difficulty for military planners and units in executing a mission that is extremely generic. The UN mandate was fairly clear, "Establish a temporary and limited multinational protection force to facilitate the safe and prompt delivery of humanitarian assistance, and to help to create a secure environment for the missions of international organizations in Albania, including those providing humanitarian assistance."[13] The mission stated in the Campaign Plan was, "To ensure the security and best conditions in order to flow in and deliver the humanitarian aid, and the development of the international organizations' activities for the Albanian social and economic reconstruction." This mission statement was even more generic and was left to the operators wide ranging interpretation. The reason for this choice was related to the necessity to find an acceptable agreement between many partners, not used to a common decision making process within the time constraints imposed.

The effect of such a choice at the higher level was to transfer "political immediate decision making authority" to the lower levels of command because obviously the decision speed of the political leadership did not often match the operational one.

The challenge for the Steering Committee was coordinating the military with the civilian and humanitarian parts of the mission. The collaborative process set up between the multinational protection force and the missions of international organizations involved in Albania resulted in excellent coordination. Nevertheless, during the operation some of the senior military representatives assumed the role of direct liaison between their national headquarters and their national forces, resulting in some inconsistencies with the decision taken by the Steering Committee. Obviously, this behavior sometimes made this collaborative process among the players more complex. By the same token, OSCE established its presence in Albania to, "provide the coordinating framework within which other international organizations could play their part in their respective areas of competence, in support of a

coherent international strategy, and in facilitating improvements in the protection of human rights, and basic elements of civil society."[14] Vranitzky coordinated the delivery of EU aid, OSCE activity in the field of democratization, and election preparation and monitoring. Very often the coordination between the FMP and OSCE had to be realized directly in the field and not through the political level (Steering Committee). This procedure had the advantage of being very fast, but contemporaneously, it at times caused a lack of understanding between the forces operating in the field and the political authorities of the contributing nations which expected the coordination performed in the Steering Committee.

Another consequence of this approach and the necessity to maintain politically correct decision making ability, determined the initial choice for the deployment and employment of the FMP. Accordingly, it was initially decided in order to avoid the negative effect of a sort of "occupation and repartition" of Albanian territory, not to divide the territory in sectors of responsibility, but provide the intervention of the single contingent along the lines of communication. This decision resulted in notable problems in the operational activities. The military chain of command had to continually intervene to conduct formal coordination everytime a specific task was to be performed under unusual circumstances or concerning an issue not initially considered. On 22 May, it was decided to divide the AOR into national sectors improving the coordination and the effectiveness of the FMP. By the same token, the course of action initially adopted was to employ the forces, "to secure the routes" rather than "to escort the humanitarian convoys" in order to guarantee the freedom of movement and provide security to the flow of the humanitarian aid. Such a solution was not feasible with the available forces and the direct escort of convoys solution was adopted.

The second, and probably most relevant aspect of Operation Alba, was the international environment in which it was conducted. Despite the danger that the Albanian crisis could spread to neighboring Kosovo or Macedonia, the United States, Germany, and Britain, who were actively involved in Bosnia, did not deploy any troops to Albania and left the task to their southern European allies. The United States, despite supporting NATO as the main institution for stability and security in Europe, rejected any Alliance involvement in Albania.[15] Similarly, German Chancellor Helmut Kohl declared that the Albanian crisis was essentially an internal matter and it was not clear what foreign troops could do there. In March 1997, Albania was said to be part of "the great European family,"[16] but the EU foreign ministers ruled out Albania's call for military intervention.[8] France's participation in Operation ALBA had more to do with its desire to enhance joint European action in security and foreign policy.

Under these circumstances, the Italian initiative, backed by the UN and the OCSE, was without a doubt successful and although the results of the mission did not change structurally the situation in Albania, Alba provided a positive starting point for a series of international support programs. At the same time this solution showed some potential negative effects:

- It established a "dangerous" precedent for future peacekeeping operations in Europe where intervention is left to ad-hoc coalitions of countries, usually neighbors affected by the outcome of the crisis, often with vital national interests to promote.
- It highlighted a lack of effective coordination between various bodies, namely the countries providing troops, the EU, the non-governmental organizations providing and distributing humanitarian aid, and the OSCE.
- The "single country national interest" approach could result in an operation finding itself in circumstances where the critical condition for peacekeeping operations, namely impartiality, falls short.
- The chaotic and anarchic situation in Albania created problems for European security organizations, which had difficulties meeting high expectations in their peacekeeping operations. NATO, WEU, and OSCE have a mandate for peace support operations that remained unutilized since the beginning of the Albanian crisis. In particular, NATO's Combined Joint Task Forces (CJTF), designed for peace-support operations outside NATO's traditional area, and the Euro-Corps, which may be deployed for missions of keeping and restoring peace, remained idle during the Albanian crisis.

The danger of the ad hoc coalition is not in the efficacy of the solution itself, but because it risks diminishing the effectiveness of the regional organization traditionally responsible to deal with such crises. In the case of Albania, it became clear that when the national interests of the major powers are not at stake, it is left to a coalition of neighboring states, having particular interests in a region to take action. On that occasion the OSCE Chairman-in-Office, Danish Foreign Minister Helveg Petersen, applauded the role that "interested countries" were playing in the Albanian operation, indicating that this was a model for future European security initiatives.[17] Operation Alba could summarize the way European powers are going to deal with small crises on Europe's peripheries in the future. Specifically, leaving them to coalitions of willing interested states without much reference to security organizations, which operate under peace-support mandates or UN-standards for peacekeeping, including impartiality.

As far as the lack of coordination is concerned, it must be observed that UNSCR 1101 confined itself, "to encourage the Member States participating in the multinational protection force to cooperate closely with the OSCE, the European Union and all international organizations involved in rendering humanitarian assistance in Albania."[18] It neither set any obligation to report systematically and frequently to the OSCE, nor any more constraining coordination framework. In other words, the role of the international organization (in this case the OSCE), capable of legitimizing the operation during its development, was not clearly stated.

In summary, the conclusion of Operation Alba must be certainly welcomed as positive, yet at the same time it must be recognized that in the future European security environment, the role and the responsibility of maintaining stability cannot be left to single country initiatives. That makes it necessary for the international organizations in Europe to assume a more effective role in conflict prevention and

resolution. Presently the OSCE, as the only pan-European security organization, seems to be the more appropriate organization to manage security problems in Europe reducing the risk of frustration, disagreement, or perception of partiality by any of the member countries. "The OSCE may benefit from resources and possible experience and expertise of existing organizations such as the EU, NATO, and the WEU, and could therefore request them to make their resources available in order to support it in carrying out peace-keeping activities."[19]

Total words: 5464

ENDNOTES

[1] Roney T. Alexander Albania 3rd ed. Headquarters U.S. Army Europe and Seventh Army Country Profile Series. Regional Security Division National Security Studies and Strategy Group Science Applications International Corporation. 1999. 4

[2] State Department press release of 10 March 1997.

[3] The missions of evacuation of civil personnel completed by the Italian Armed Forces in this period, were developed according the intervention plan denominated "Alba NEO."

[4] According the bilateral agreement of March 25 the anti-immigration action is developed on three lines. The first one in Albanian territorial waters is constituted by the 28 Naval group (Tremiti, Capri, Pantelleria, Caprera and 8 motovedettes). Some of these united are detached in the port of Durazzo. The second line in the international waters among Albania and Italy constituted by three frigates. The third line, in Italian territorial waters, acts for containing the illegal immigration on the base of the information received by the units operating in the second line.

[5] Permanent Council of the Organization for Security and Cooperation in Europe (OSCE). Decision No. 160 of 27 March 1997.

[6] United Nation UN Security Council Resolution 1101 of 27 March 1997.

[7] Legge 18 febbraio 1997, n. 25 "Attribuzioni del Ministro della Difesa, ristrutturazione dei vertici delle Forze Armate e dell'Amministrazione della Difesa" pubblicata nella *Gazzetta Ufficiale* n. 45 del 24 febbraio 1997.

[8] Organization for Security and Cooperation in Europe. Albania, Parliamentary Elections 29 June 1997. 3.

[9] In accordance with the OSCE Permanent Council Decisions N.158/20 March 20 1997 and N.160/27 March 1997.

[10] United Nations. UN Security Council Resolutions No.1114, 19 June 1997.

[11] La Repubblica, Italy, 14 April 1997.

[12] IMF - World Bank Annual Meeting 1997 Statement by Prime Minister H.E. Mr. Fatos NANO Head of the delegation of the Republic of Albania HONG KONG, 03. October 1997

[13] United Nation UN Security Council Resolution 110 of 28 March 1997.

[14] OSCE Permanent Council Decision No. 160, 27 March 1997.

[15] US Department of State spokesman Nicholas Burns, Statement on Albania, 7 April 1997.

[16] Ambassador D'Ansembourg quoted in *Albanian Telegraphic Agency*, 18 March 1997. Ambassador D'Ansembourg led the EU and OSCE joint delegation, with fact-finding tasks, in Tirana (17-18 March 1997).

[17] OSCE Newsletter, Vol.4 NO.4 April 1997.

[18] United Nation UN Security Council Resolution 1101 of 28 March 1997.

[19] The Challenges of Change, Helsinki CSCE Summit Declaration, 10 July 1992, chapter III, para.52.

BIBLIOGRAPHY

Agnetti, Pino Operazione Alba: La missione della Forza Multinazionale di Protezione in Albania. Istituto Geografico De Agostini S.p.A Novara. 1997

Limes Rivista Italiana di Geopolitica Il richiamo dei Balcani, dalla guerra Iugoslava al caso Quebec. Editrice Periodici Culturali s.r.l. Roma. 1995

Roney T. Alexander Albania 3rd ed. Headquarters U.S. Army Europe and Seventh Army Country Profile Series. Regional Security Division National Security Studies and Strategy Group Science Applications International Corporation. 1999.

Commission on Security and Cooperation in Europe. The present situation in Albania. Commission on Security and Cooperation in Europe Washington D.C. 1997

Organization for Security and Cooperation in Europe. Annual Report 1997 on OSCE Activities. Organization for Security and Cooperation in Europe. Vienna. 1997.

Organization for Security and Cooperation in Europe. Albania, Parliamentary Elections 29 June 1997. Available from http://www.osce.org/odihr/election/alb2-3.htm

United Nations. UN Security Council Resolutions No.1101 28 March 1997and No.1114 19 June 1997 Available from http://www.un.org/documents/scres.htm

Hellenic Resource Network Albanian Telegraphic Agency (ATA) 18 March 1997. Available from http://www.hri.org/news/balkans/ata/97-03-18_1.ata.html#08

DEPARTMENT OF THE ARMY
UNITED STATES ARMY WAR COLLEGE AND CARLISLE BARRACKS
CARLISLE, PENNSYLVANIA 17013-5220

REPLY TO
ATTENTION OF

June 15, 2000

Library

Defense Technical Information Center
ATTN: DTIC-OCQ
8725 John J. Kingman Road, Suite 0944
Fort Belvoir, VA 22060-6218

Dear Sir:

A Strategy Research Paper for Col. Riccardo Marchio', AY 2000 Student from the US Army War College, titled "Operation Alba" was previously submitted to you on June 6, 2000 for a DTIC number assignment.

Enclosed is a **REVISED/CORRECTED** page number 3 of that report, rescinding the previous report page number 3. As of date above we have not received at DTIC number assigned to this paper so I am unable to provide you with a reference to that.

Thank you for your cooperation in this matter. If there are any questions, please contact Ms. Melody Baker, 717-245-4317, or Fax 717-245-3323.

Sincerely,

Melody M. Baker

MELODY M. BAKER
Library Technician

ADA 378201