NPS-ME-00-001

NAVAL POSTGRADUATE SCHOOL
MONTEREY, CALIFORNIA

Technical Report

The Surface Warfare Test Ship

by

Faculty Members:

Charles N. Calvano Robert C. Harney

Student Members:

LT David Wickersham, USN, team leader
LTjg Ioannis Farsaris, Helenic Navy
LT Philip Malone, USN
LCDR David Ruley, USN
LT Nathan York

January 2000

Approved for public release; distribution unlimited.

20000306 061

DTIC QUALITY INSPECTED 3

NAVAL POSTGRADUATE SCHOOL
MONTEREY, CALIFORNIA

RADM Robert C. Chaplin
Superintendent

Richard Elster
Provost

This report was prepared as an integral part of the Total Ship Systems Engineering (TSSE) educational process. Small amounts of funding from the Port Hueneme Division of the Naval Surface Warfare Center were used only for minor student travel incident to performing the design documented herein. The work described was performed between July and December 1999.

This report was prepared by:

Charles N. Calvano
Director, Total Ship Systems
Professor, Mechanical Engineering Dept.

Robert C. Harney
TSSE Combat Systems Chair
Associate Professor, Physics Dept.

Reviewed by:

Terry R. McNelley
Chairman and Professor
Mechanical Engineering Dept.

Released by:

David W. Netzer
Dean of Research

REPORT DOCUMENTATION PAGE

Form approved

OMB No 0704-0188

Public reporting burden for this collection of information is estimated to average 1 hour per response, including the time for reviewing instructions, searching existing data sources, gathering and maintaining the data needed, and completing and reviewing the collection of information. Send comments regarding this burden estimate or any other aspect of this collection of information, including suggestions for reducing this burden, to Washington Headquarters Services, Directorate for information Operations and Reports, 1215 Jefferson Davis Highway, Suite 1204, Arlington, VA 22202-4302, and to the Office of Management and Budget, Paperwork Reduction Project (0704-0188), Washington, DC 20503.

1. AGENCY USE ONLY (Leave blank)	2. REPORT DATE	3. REPORT TYPE AND DATES COVERED
	26 January 2000	Technical

4. TITLE AND SUBTITLE

Surface Warfare Test Ship Design

5. FUNDING

N0002400WR10655

6. AUTHOR(S)

C. N. Calvano & R. C. Harney; LT D. Wickersham, LTjg I. Farsaris, LT P. Malone, LCDR D. Ruley, LT N. York

7. PERFORMING ORGANIZATION NAME(S) AND ADDRESS(ES)

Naval Postgraduate School
(TSSE Program)
Monterey, CA 93943-5000

8. PERFORMING ORGANIZATION REPORT NUMBER

NPS-ME-00-001

9. SPONSORING/MONITORING AGENCY NAME(S) AND ADDRESS(ES)

10. SPONSORING/MONITORING AGENCY REPORT NUMBER

11. SUPPLEMENTARY NOTES

The views expressed in this report are those of the authors and do not necessarily reflect the official policy or position of the Department of Defense or the U.S. Government.

12a. DISTRIBUTION/AVAILABILITY STATEMENT

Approved for public release; distribution unlimited

12b. DISTRIBUTION CODE

13. ABSTRACT (Maximum 200 words.)

A systems engineering approach to the design of a ship conversion to satisfy the requirements for a Surface Warfare Test Ship (SWTS) to be employed by the Port Hueneme Division of the Naval Surface Warfare Center is presented. The ship described would meet test needs for future weapons and sensor systems and provide limited test capability for future hull, mechanical and electrical systems.

The current Self Defense Test Ship is over 45 years old, approaching the end of its useful life. A conversion of a decommissioned SPRUANCE (DD 963) class ship is the basis for the replacement Surface Warfare Test Ship. The study proceeds from mission needs and operational requirements through a functional analysis and study of threat weapons to be employed against the SWTS. After summarizing the characteristics of a SPRUANCE Class ship, the study reports an analysis of four alternative conversion schemes. The alternatives are described, with the rationale for choosing that considered best. The chosen alternative is then described and analyzed in several important areas of concern including combat systems functionality, signature characteristics, engineering plant and habitability for test personnel. The fitness of the proposed design for several special evolutions is also described, and alternatives for further enhancing performance are presented.

14. SUBJECT TERMS

Ship Design, Self Defense, Surface Warfare, Systems Engineering, Test Ship

15. NUMBER OF PAGES

266

16. PRICE CODE

17. SECURITY CLASSIFICATION OF REPORT	18. SECURITY CLASSIFICATION OF THIS PAGE	19. SECURITY CLASSIFICATION OF ABSTRACT	20. LIMITATION OF ABSTRACT
Unclassified	Unclassified	Unclassified	UL

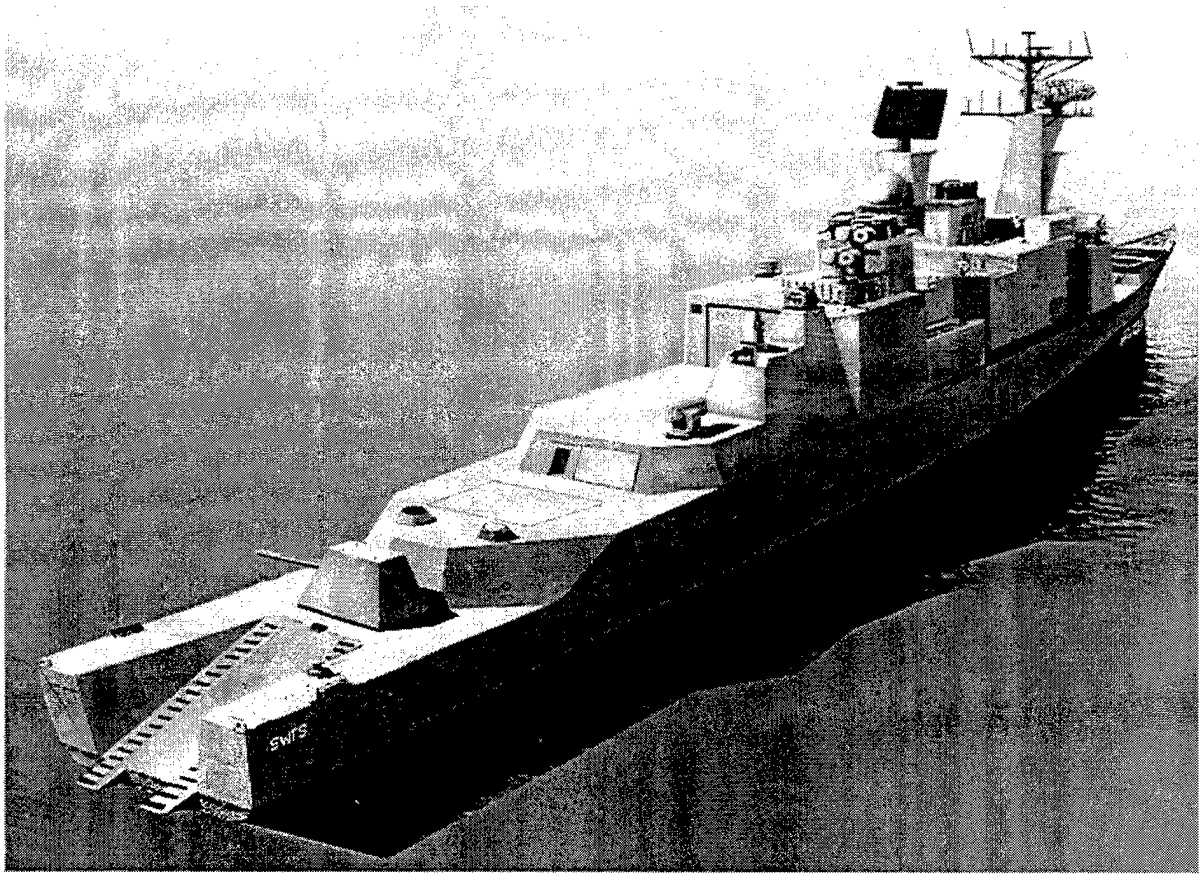

The Surface Warfare Test Ship

by

Faculty Members:

Charles N. Calvano Robert C. Harney

Student Members:

LT David Wickersham, USN, team leader
LTjg Ioannis Farsaris, Helenic Navy
LT Philip Malone, USN
LCDR David Ruley, USN
LT Nathan York

The Surface Warfare Test Ship

This report documents a systems engineering and design capstone project undertaken by students in the Total Ship Systems Engineering program at the Naval Postgraduate School. The project was performed under the direction of Professors C. N. Calvano and R. C. Harney. The officer students who comprised the design team were: LT David Wickersham, USN, team leader; LTjg Ioannis Farsaris, Helenic Navy, LT Philip Malone, USN, LCDR David Ruley, USN, LT Nathan York, USN

ABSTRACT

A systems engineering approach to the design of a ship conversion to satisfy the requirements for a Surface Warfare Test Ship (SWTS) to be employed by the Port Hueneme Division of the Naval Surface Warfare Center is presented. The ship described would meet test needs for future weapons and sensor systems and provide limited test capability for future hull, mechanical and electrical systems.

The current Self Defense Test Ship is over 45 years old, approaching the end of its useful life. A conversion of a decommissioned SPRUANCE (DD 963) class ship is the basis for the replacement Surface Warfare Test Ship. The study proceeds from mission needs and operational requirements through a functional analysis and study of threat weapons to be employed against the SWTS. After summarizing the characteristics of a SPRUANCE Class ship, the study reports an analysis of four alternative conversion schemes. The alternatives are described, with the rationale for choosing that considered best. The chosen alternative is then described and analyzed in several important areas of concern including combat systems functionality, signature characteristics, engineering plant and habitability for test personnel. The fitness of the proposed design for several special evolutions is also described, and alternatives for further enhancing performance are presented.

1 FACULTY EVALUATION

(This section of the report prepared by the TSSE faculty, Professors Calvano and Harney)

The first four TSSE student capstone designs were performed to meet requirements established by the faculty – requirements which were essentially "made up", though realistic and of potential Navy interest. This design, like its three most recent predecessors, was undertaken at the suggestion of a "real Navy customer". Previous designs done for interested parties outside the Naval Postgraduate School included an Arsenal Ship for the Assistant Secretary of the Navy (Research, Development, and Acquisition), an all short take-off, vertical landing (STOVL) aircraft carrier using conventional propulsion for the CVX program office [1], and a Maritime Pre-Positioning Force 2010 fleet for the Center for Naval Analyses and the U. S. Marine Corps [2]. This year the Ship Self-Defense Branch of the Port Hueneme Division of the Naval Surface Warfare Center (NSWCPHD) asked us to look at the design of a replacement for the current Self-Defense Test Ship (SDTS – the ex-Decatur). The replacement ship, if the program is approved, is expected to be based on a DD963 class ship, converted for the purpose.

The fact that the SDTS-replacement would be a ship conversion from an existing class of ship, rather than an entirely new ship design, was a point of concern for the faculty. We were apprehensive that a conversion project would not be as educationally challenging as a new ship design. We thought there might be less need for combat systems analysis, there would certainly be less need for use of the ASSET code in platform design and therefore less emphasis on naval architecture, and there might be fewer opportunities for innovation. The unquestionable need for a replacement SDTS coupled with the genuine interest in helping during the design process on NSWCPHD's part, overcame our initial hesitation.

As it turned out, our fears were unjustified. Real concerns for safety and survivability drove combat systems analysis and topside design to as high a level of detail as achieved in previous projects. ASSET was still used to evaluate the stability of the modified design. The fact that historical costs were available for SPRUANCE class ships (the class selected for conversion) made possible far better cost estimates than had typically been achieved in the past. In addition, creativity was not stifled in the least. The students researched past and ongoing programs of potential relevance and included many of them in their trade spaces. Innovative ideas they adopted included moving the helicopter landing deck to the bow of the ship, incorporating an enclosed accommodation ladder, adding a boat ramp for barge handling, and significantly reducing the radar cross section of the superstructure, masts, and sensors.

Moving the helicopter landing deck forward of the VLS launchers improves the safety of EOD personnel disarming the weapons after a test (the test weapons of interest are mounted aft) and frees up considerable space for future test projects, without decreasing safety of flight operations. The enclosed accommodation ladder with "French Doors" in the hull removes a source of significant radar cross section, and makes for considerably safer at-sea debarkation and embarkation of research personnel. The boat ramp incorporated into the stern permits the test ship to carry, deploy, and recover its own test barge. This will result in considerable cost savings over the anticipated lifetime of the ship as an additional tug need not be rented to provide barge transport. Simple incorporation of screens, solid panels, and flexible radar absorbing material,

alters the rectangular shape of superstructure objects and hides high cross section clutter, at minimal increases in cost and weight.

This year's team even went so far as to develop initial concepts of damage control in a highly automated ship during both manned and remote control modes of ship operation. In short the TSSE design satisfied or exceeded all of the requirements of the Mission Need Statement and the Operational Requirements Document.

On 9 December 1999 the TSSE team briefed their project before the NPS students and faculty as well as a select audience of individuals from Navsea and other self-defense stakeholders as well as the hierarchy at Port Hueneme. It was exceptionally well received. The TSSE faculty concur with this overall evaluation. Representing the work of only five students working part time for less than 6 months, the attached final report is an outstanding piece of work. In our opinion it is something of which not only the TSSE students and faculty, the Naval Postgraduate School, and NSWC Port Hueneme Division, but also the United States Navy can be proud.

[1] A Short Take-Off/Vertical Landing (STOVL) Aircraft Carrier (S-CVX), NPS Report NPS-ME-98-003, May 1998.

[2] The Maritime Preposition Force Ship 2010, NPS Report NPS-ME-99-002, April 1999.

SURFACE WARFARE TEST SHIP

TABLE OF CONTENTS

2 INTRODUCTION 1-1

3 CURRENT CAPABILITIES 2-1

3.1 EX-DECATUR 2-2

3.2 DECOY BARGE 2-4

3.3 TEST PROCEDURE 2-6

4 REQUIREMENTS DEFINITION 3-1

4.1 MISSION NEEDS STATEMENT 3-2

4.2 OPERATIONAL REQUIREMENTS DOCUMENT 3-3

4.3 FUNCTIONAL ANALYSIS 3-4

4.4 THREAT ANALYSIS 3-5

4.4.1 TARGET MISSILE PROFILES 3-5

5 DESIGN PHILOSOPHY 4-1

6 PROJECTED CAPABILITIES 5-1

6.1 SPRUANCE CLASS DESTROYER 5-1

6.2 PAYLOAD 5-4

6.3 BERTHING 5-5

6.4 HULL, MECHANICAL, AND ELECTRICAL7 5-6

7 ANALYSIS OF ALTERNATIVES 6-1

7.1 ASPECTS COMMON TO ALL ALTERNATIVES 6-1

7.2 ALTERNATIVE A: MINIMUM CHANGE VERSION 6-2

7.3 ALTERNATIVE B: IMPROVED VERSION 6-6

7.4 ALTERNATIVE C: OPTIMIZED VERSION 6-9

7.5 ALTERNATIVE D: IDEAL VERSION 6-12

7.6 RADAR CROSS SECTION COMPARISON 6-15

7.7 FIELD OF VIEW COMPARISON 6-16

7.8 CONCLUSION OF ANALYSIS OF ALTERNATIVES 6-18

8 COMBAT SYSTEMS DESIGN 7-1

8.1 PAYLOAD EXTERNAL ARRANGEMENTS 7-1

8.1.1 SENSORS 7-2

8.1.2 WEAPON SYSTEMS 7-5

8.1.3 COMMUNICATIONS SUITE 7-7

8.1.4 SYSTEMS NOT ACCOMMODATED 7-11

8.1.5 FIELDS OF VIEW 7-11

8.2 INSTALLED SYSTEMS/INTERNAL ARRANGEMENTS 7-12

8.2.1 COMMAND AND CONTROL SPACES 7-12

8.2.2 COMBAT SYSTEMS SENSOR AND WEAPON EQUIPMENT SPACES 7-12

8.2.3 TEST SUPPORT SPACES 7-13

8.2.4 EXPANSION SPACES 7-14

8.2.5 SHIP SUPPORT SPACES 7-15

8.2.6 SPACES PLACED IN LAYUP 7-16

8.3 **CIC LAYOUT** **7-17**

8.4 **BRIDGE LAYOUT** **7-19**

8.5 **SHIP'S REMOTE CONTROL SYSTEM** **7-21**

8.6 **COMBAT SYSTEMS REMOTE CONTROL SYSTEM** **7-24**

8.7 **CAMERA PLAN** **7-25**

8.7.1 CAMERA LOCATIONS 7-25

8.7.2 CAMERA CONTROL CENTER 7-26

8.8 **BATTLE GROUP INTEROPERABILITY** **7-26**

8.9 **SYSTEMS PLACED IN LAY-UP** **7-26**

9 **RADAR CROSS SECTION** **8-1**

9.1 **RADAR CROSS SECTION OF EX-DECATUR AND USS O'BRIEN** **8-2**

9.2 **MODIFICATIONS TO THE HULL AND SUPERSTRUCTURE** **8-4**

9.3 **MODIFICATIONS TO THE SENSORS, WEAPONS, AND MASTS** **8-5**

9.4 **RESULTS OF RCS CALCULATIONS** **8-6**

9.5 **ANALYSIS OF ALTERNATIVES RCS CALCULATIONS** **8-6**

10 **ENGINEERING** **9-1**

10.1 **PROPULSION PLANT** **9-2**

10.2 **CENTRAL CONTROL STATION LAYOUT** **9-4**

10.3 **ELECTRIC POWER GENERATION AND DISTRIBUTION** **9-5**

10.4 **SERVICES FOR WEAPONS AND SENSORS** **9-5**

10.5 **TEST ENGINEROOM** **9-5**

10.6 **STEAM TO ELECTRIC CONVERSION** **9-6**

10.6.1 FRESH WATER PRODUCTION 9-6

10.6.2 CHILLED WATER AND HVAC 9-6

10.6.3 GALLEY AND LAUNDRY EQUIPMENT 9-7

10.6.4 FUEL AND LUBE OIL HEATING 9-7

10.7 **DAMAGE CONTROL** **9-8**

10.7.1 DAMAGE CONTROL DETECTION AND SURVEILLANCE 9-9

10.7.2 EVALUATION AND DECISION 9-11

10.7.3 ENGAGEMENT 9-12

10.7.4 STABILITY 9-15

10.8 **CORROSION SUPPRESSION** **9-16**

11 **HABITABILITY** **10-1**

11.1 **BERTHING** **10-2**

11.2 **CREW RECREATION AND MESSING** **10-5**

11.3 **REFUSE STRATEGY** **10-7**

12 **SPECIAL EVOLUTIONS** **11-1**

12.1 **FLIGHT OPERATIONS** **11-2**

12.1.1 FORWARD FLIGHT DECK 11-4

12.2 **PERSONNEL TRANSFER** **11-7**

12.2.1 ENCLOSED ACCOMMODATION LADDER 11-8

12.3 **TOWING OPERATIONS** **11-10**

12.3.1 BARGE RAMP 11-12

12.3.2 WINCHING SYSTEM 11-14

12.4 **BOAT DECK** **11-16**

12.5 **AMMUNITION HANDLING** **11-18**

13 **SAFETY** **12-1**

14 **INTEGRATED LOGISTICS SYSTEM** **13-1**

15 **MANNING** **14-1**

16 **OPTIONS** **15-1**

16.1 **ADVANCED ENCLOSED MAST/ SENSOR SYSTEM** **15-1**

16.2 **BRIDGE WING REDUCTION** **15-4**

16.3 **STANDARD BARGE TOWING OPERATIONS** **15-6**

16.4 **STANDARD PERSONNEL TRANSFER** **15-8**

17 **COST** **16-1**

17.1 **METHODS TO LEVERAGE COST** **16-10**

18 **CONCLUSIONS** **17-1**

18.1 **REQUIREMENTS REVIEW** **17-2**

18.2 **AREAS FOR FURTHER RESEARCH** **17-5**

LIST OF APPENDICES

Appendix A.	LIST OF ACRONYMS	A-1
Appendix B.	SDTS REPLACEMENT, PHD WHITE PAPER	B-1
Appendix C.	MISSION NEEDS STATEMENT	C-1
Appendix D.	FUNCTIONAL FLOW DIAGRAMS	D-1
Appendix E.	OPERATIONAL REQUIREMENTS DOCUMENT	E-1
Appendix F.	SHIP'S DRAWINGS	F-1
Appendix G.	ASSET REPORTS	G-1
Appendix H.	RADAR CROSS SECTION CALCULATIONS	H-1
Appendix I.	FIELD OF VIEW DRAWINGS	I-1

LIST OF FIGURES

Figure 2-1: SDTS Current Combat Systems Suite	2-1
Figure 2-2: SDTS at Sea	2-3
Figure 2-3: SDTS Towing a Decoy Barge	2-4
Figure 2-4: Passive Decoy Barge for Actively Guided Missiles	2-5
Figure 2-5: Active Decoy Barge for Passively Guided Missiles	2-6
Figure 2-6: Operation on the Pacific Missile Test Range	2-7
Figure 3-1: Feasibility Study Flowchart	3-2
Figure 5-1: SPRUANCE Class Destroyer with VLS Profile	5-1
Figure 5-2: Standard SPRUANCE Configuration	5-3
Figure 5-3: USS O'BRIEN Weapons and Sensors	5-4
Figure 6-1: Alternative A, Minimum Change Version	6-5
Figure 6-2: Alternative B, Improved Version	6-8
Figure 6-3: Alternative C, Optimized Version	6-11
Figure 6-4: Alternative D, Ideal Version	6-14
Figure 6-5: Radar Cross Section of the Alternative Versions	6-16
Figure 7-1: Surface Warfare Test Ship Profile	7-1

Figure 7-2: Foremast 7-2
Figure 7-3: Aft Mast 7-4
Figure 7-4: Aft Weapons Platform on the Former Flight Deck 7-5
Figure 7-5: Communications Antenna Plan 7-10
Figure 7-6: Typical Field of View Diagram 7-11
Figure 7-7: Combat Information Center Layout 7-18
Figure 7-8: Bridge Layout 7-20
Figure 7-9: Ship's Remote Control System Internal Interfaces 7-22
Figure 7-10: Ship Control Equipment 7-23
Figure 7-11: Combat Systems Remote Control System 7-24
Figure 8-1: Snell's Law of Reflection 8-1
Figure 8-2: Reflection in a Dihedral 8-2
Figure 9-1: DD 963 Engineering Spaces 9-1
Figure 9-2: Layout of Engineering Spaces 9-3
Figure 9-3: CCS Layout 9-4
Figure 9-4: DC System Design 9-8
Figure 9-5: TWARSES Display Unit 9-10
Figure 9-6: TWARSES Installed on USS GARY (FFG 51) 9-11
Figure 9-7: Damage Control Organization 9-12
Figure 9-8: DD 963 Firemain Schematic Diagram 9-14
Figure 9-9: Hypothetical Mainspace Fire 9-14
Figure 9-10: Intact Static Stability Diagram 9-15
Figure 10-1: 44 Man Berthing Compartment 10-1
Figure 11-1: Enclosed Accommodation Ladder 11-3
Figure 11-2: Barge Ramp 11-4
Figure 11-3: Starboard Boat Deck with Crane 11-5
Figure 15-1: Advanced Enclosed Mast/Sensor Option 15-2

LIST OF TABLES

Table 3-1: SDTS Order of Battle 3-5

Table 4-1: Prioritized Design Objectives 4-2

Table 5-1: USS O'BRIEN Characteristics 5-2

Table 5-2: SSDS Mk 2 Configuration 5-5

Table 6-1: Field of View Comparison 6-17

Table 7-1: SWTS Communications Suite 7-9

Table 7-2: Command and Control Spaces 7-12

Table 7-3: Sensor and Weapon Support Spaces 7-13

Table 7-4: Test Support Spaces 7-14

Table 7-5: Expansion Spaces 7-14

Table 7-6: Ship Support Spaces 7-15

Table 7-7: Spaces Placed in Lay-Up 7-16

Table 8-1: Hull and Superstructure Directivity Factor 8-3

Table 8-2: Weapons and Sensors Directivity Factor 8-3

Table 9-1: ECSS Components 9-4

Table 9-2: Installed Fire Engagement Systems 9-8

Table 9-3: Stability and Trim Characteristics 9-15

Table 10-1: Berthing Compartment Schedule 10-1

Table 14-1: HM&E Manning 14-1

Table 14-2: Combat Systems Manning 14-2

Table 14-3: Underway Watch Organization 14-3

Table 14-4: Flight Quarters Watchbill 14-4

Table 14-5: Barge Operations Watchbill 14-5

Table 14-6: Small Boat Operations Organization 14-6

Table 16-1: Conversion Cost of USS O'BRIEN ($K) 16-2

Chapter 1: *Introduction.*

The changing nature of warfare has forced United States Navy ships to operate closer to land. This littoral warfare exposes ships to a wider variety of threats while compressing the reaction time against these threats. In response to these increased dangers, the Navy is upgrading ship self defense weapon systems. The effectiveness of these improved weapon systems must be verified through realistic testing against real world threats at sea. Fleet downsizing has increased the demands upon the remaining ships. To reduce the time demands upon these ships, a dedicated test platform was developed: the Self Defense Test Ship (SDTS).

SDTS is homeported in Port Hueneme, CA, and is operated by Port Hueneme Division, Naval Surface Warfare Center (PHD NSWC). Since becoming operational in October 1994, it has successfully tested systems such as Rolling Airframe Missile (RAM) Block I, Close In Weapon System (CIWS) Block IA and IB, and NATO Seasparrow Missile System (NSSMS) RIM-7P and RIM-7R. The savings of commissioned warship time and manpower has been substantial. Additionally, the Test and Evaluation Teams have benefited from possessing a dedicated test platform with a schedule determined by test requirements rather than ship operational tempo.

The current SDTS, ex-USS DECATUR (Ex-DDG 31), is more than 45 years old. Recent hull surveys reveal significant deterioration that requires extensive and expensive repair. The SDTS cannot transport its own towed targets, incurring added tug expenses. The propulsion system of the SDTS cannot provide the maximum target speeds desired in some tests. This limited power precludes testing in moderate sea states. Furthermore, the ship cannot currently deploy for more than a few days without returning to port, and it cannot deploy to alternate test sites (such as Barking Sands in Hawaii). The new generation of weapon systems to be tested, such as Ship Self Defense System (SSDS) Mk 2 and Cooperative Engagement Capability (CEC), demand more deck space and enclosed volume than the ex-DECATUR can provide. A replacement for ex-DECATUR that does not suffer from these limitations is urgently needed.

To study the alternatives for the SDTS' replacement, PHD NSWC has teamed with the Total Ship Systems Engineering curriculum at the Naval Postgraduate School. Using a systems engineering approach, the SDTS has been analyzed, the needs have been defined, measurable requirements have been set, and an Analysis of Alternatives (AOA) has been conducted. The

conclusions of the AOA are the basis for a conceptual design for the SDTS replacement: the Surface Warfare Test Ship (SWTS). SWTS will have the power, space, and volume to test all of the ship self defense systems presently under development and be the centerpiece of testing at Port Hueneme well into the 21st Century.

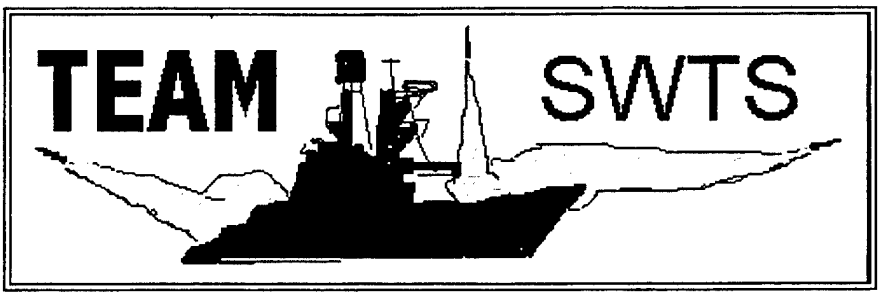

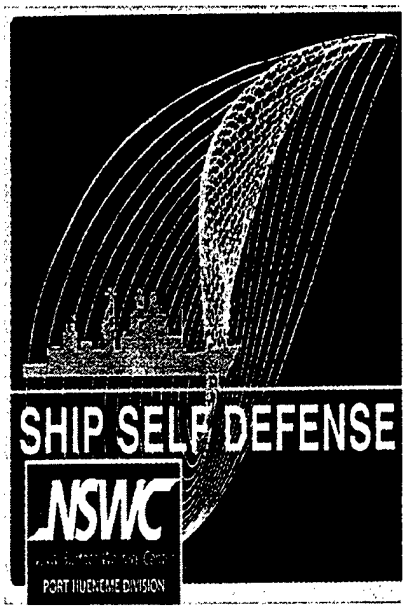

Chapter 2: *Current Capabilities*

The use of a dedicated Test and Evaluation (T&E) platform for weapons development has a long history in the Navy. In the recent past, the USS NORTON SOUND and ex-USS STODDARD have been used for this purpose. The present dedicated T&E platform is the ex-DECATUR. In 1987 an Iraqi attack on USS STARK with Exocet anti-ship cruise missiles resulted in the loss of 37 lives. This incident inspired the ex-DECATUR's conversion and employment as a Self Defense Test Ship (SDTS). SDTS is dedicated exclusively to testing ship self defense weapon systems. It has been instrumental in the development of the Infrared Sensor System (IRSS), Radiant Mist Infrared Sensor and Tracking System (IRST), Thermal Imaging Sensor System (TISS), and the SPQ-9B Fire Control Radar.

Prior to the SDTS, commissioned warships tested most weapon systems. These tests were taxing on the ship and on the weapons engineers. The ship scheduled the installation, testing, and removal of prototype systems, which distracted from training and maintenance. The test engineers dealt with the host ship's spectrum of priorities. The use of a dedicated T&E platform freed both the engineers and the active Fleet ships from these difficulties.

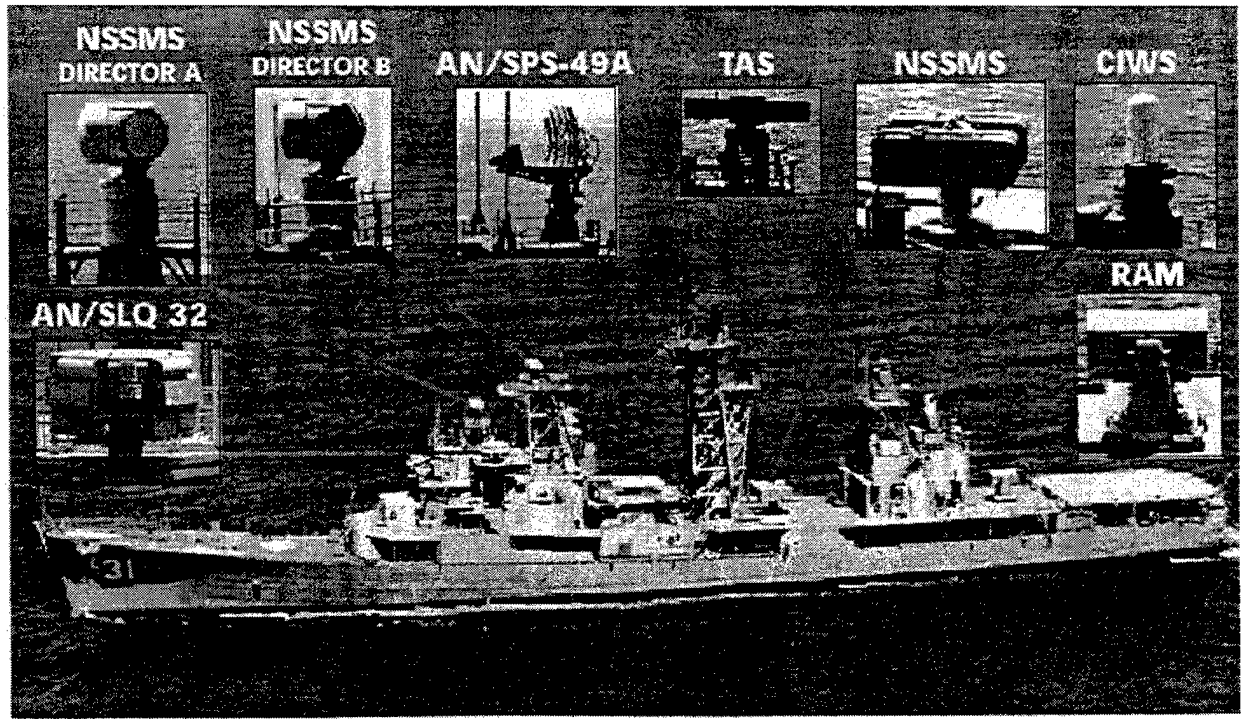

Figure 2- 1: SDTS Current Combat Systems Suite.

The second, and more important, capability of a dedicated T&E platform is the realistic threat profiles which can be used. For safety reasons, Target Missiles may not have a Closest Point of Approach (CPA) less than 2.5 nautical miles from manned vessels or commissioned ships[1]. By using a remotely controlled, uncommissioned ship, like SDTS, this restriction is avoided. Missiles can be flown as close to the ship as a test may require. To minimize the risk of damage to the SDTS, a decoy barge is towed astern. The decoy barge is described in Section 2.2

SDTS is now a mature program with well-established procedures and facilities. The current SDTS configuration is shown in Figure 2- 1. The replacement test ship must mesh with the existing program. It also must expand upon the capabilities of the current test ship. To minimize costs to the existing program, the SDTS's replacement must employ the same procedures and equipment to the maximum extent possible.

2.1 Ex-DECATUR

The ex-USS DECATUR, originally commissioned in 1956, was propelled, powered, and serviced by a 1200-pound steam engineering plant. It has a length of 418 feet, beam of 44 feet, and a draft of 20 feet. Ex-DECATUR displaced 4000 tons[2] (Note: Endnotes are provided at the end of each chapter). She was decommissioned in 1983.

After 9 years in mothballs, ex-DECATUR was converted for use as the SDTS. This conversion was completed in 1994. The expected service life was 10 to 15 years. It has a civilian contract crew of twenty-five to operate and maintain the ship. To reach the minimum watchstanding and maintenance manning requirements, steam systems were eliminated from the ship. Two diesel outboard drive units provide propulsion, and a diesel powered bow thruster provides fine maneuvering control. The maximum speed of SDTS is eight to ten knots. Three 550 KW diesel generators provide electric power for the ship. Hotel services are electrically supplied. Because ex-DECATUR did not have a flight deck, one was fabricated and installed on the fantail (Figure 2-2) to accommodate personnel and cargo transfer. SDTS has no organic helicopter hangar or maintenance facilities. It also has no lighting for nighttime flight operations. Sensors added during the conversion include the SPS-49A radar, Target Acquisition

System (TAS), and Mk 15 Close in Weapon System (CIWS). The complete arrangement is shown in Figure 2- 1. Sensors and weapons organic to specific tests have been added as required. Two remote control systems enable SDTS to conduct unmanned operations: the Ship Remote Control System (SRCS) and the Combat System Remote Control System (CSRCS).

SDTS is homeported at Port Hueneme and operated by PHD NSWC. It is shown at sea on the Pacific Missile Test Range in Figure 2- 2. SDTS berths 64 people for up to 30 days and averages 72 days underway annually. Since SDTS became operational, it has conducted 19 unmanned, at sea, live fire tests and 54 manned firings. In the near future SDTS will test the High Frequency Surface Wave Radar (HFSWR), Evolved Sea Sparrow Missile System (ESSM), and additional SPQ-9B testing.

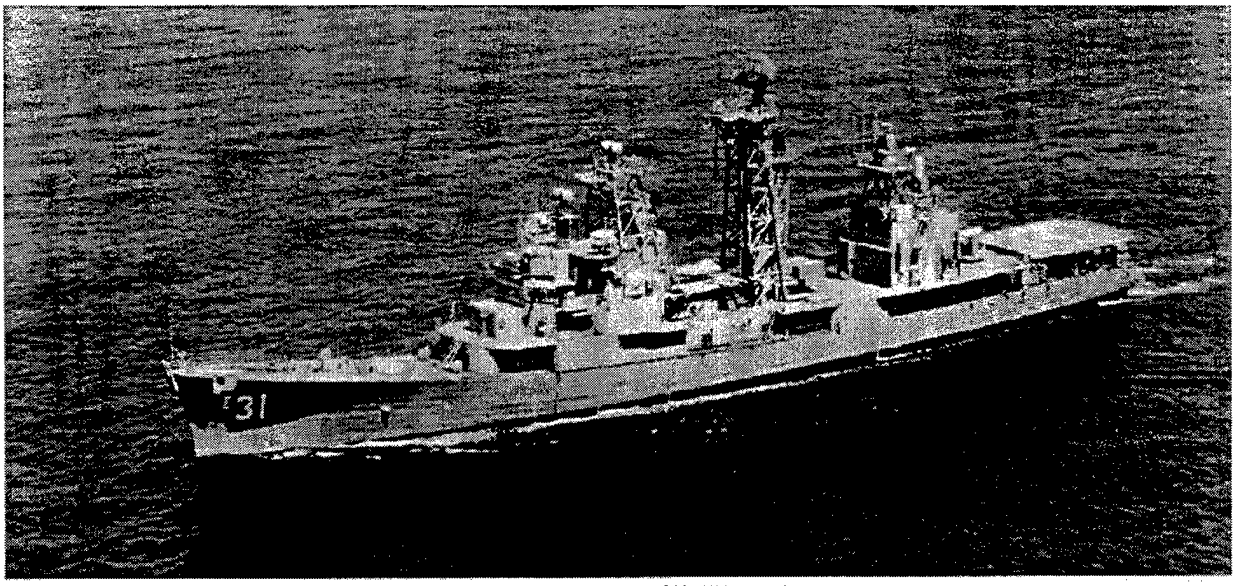

Figure 2- 2: SDTS at Sea.

The small size, high Operational Tempo, and age of SDTS have accelerated the ship's problems. Most of the deckspace is occupied. The planned installation of the LPD-17 Ship Self Defense Systems (SSDS) requires additional space for testing. The limited speed of SDTS (8-10 knots) requires excessive transit time (one calendar day for a one way trip to the OPAREA). The limited power also prevents SDTS from conducting tests in moderate sea states. This causes tests to be aborted at government expense due to deteriorated weather conditions after SDTS has already put to sea. Damage from a HARPOON impact in May 1999 is still being repaired. Most importantly, recent hull surveys have revealed serious corrosion: 30-40% of the length of the hull has lost more than half its original hull thickness (Appendix B, page 7). This requires major

repair in the near future. Finally, the fuel tank system was improperly reactivated, resulting in algae in the tanks and tank seepage. This has led to degraded fuel quality and fuel leakage into ship's storerooms. The inherent problems with the SDTS are compelling reasons for the design of a replacement.

2.2 Decoy Barge

The most realistic test that a self defense system undergoes is the at sea, live fire evaluation. During such tests, one or more target missiles are fired at the SDTS. The target missile must present a realistic profile in order to produce a valid test of the self defense system. The missiles chosen to fly these missions are described in Section 3.4.1. They are actual anti-ship cruise missiles with telemetry components in place of the warheads. Unfortunately they are still capable of significant damage from kinetic energy as well as unexpended fuel.

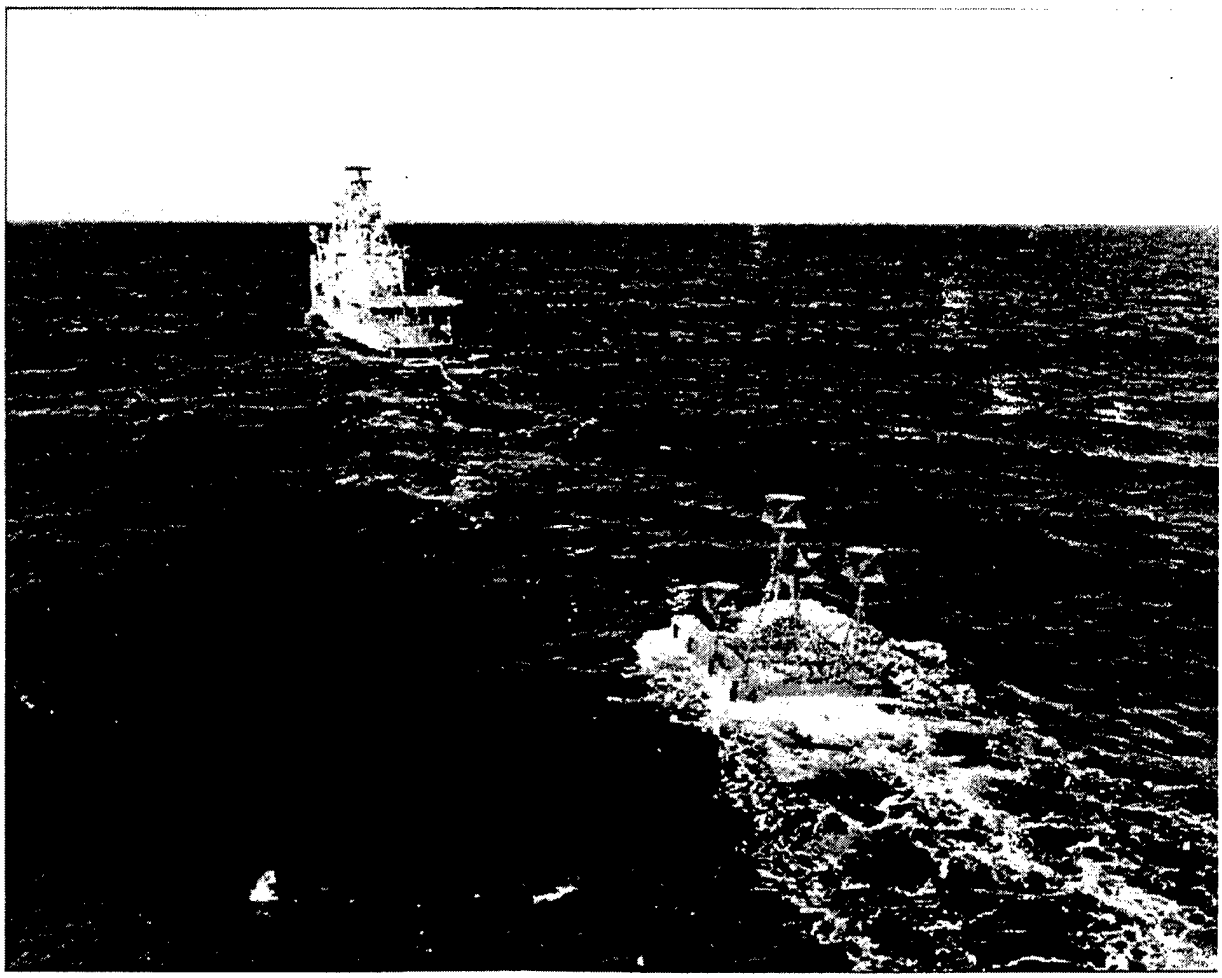

Figure 2- 3: SDTS Towing a Decoy Barge.

To prevent damage to SDTS and maintain realistic threat profiles, a decoy barge is towed just astern of the ship. The target missiles either use active guidance or a beacon homing device. During tests with the actively guided target missiles, the passive decoy barge is equipped with radar reflecting trihedrals (Figure 2- 4). These trihedrals produce a Radar Cross Section (RCS) that is larger and more attractive than the SDTS, thereby seducing inbound missiles that might acquire the ship. Passively guided missiles fly similar profiles. The active decoy barge, shown in Figure 2- 5, carries a beacon for the target missile to acquire. The decoy barge is towed between fifty and one hundred yards astern of SDTS as shown in Figure 2- 3. While tracking or homing on the decoy barge close astern of the ship, the target missiles present a realistic threat to the ship and are engaged by the self defense systems. Damage to the SDTS is averted as the target missile flies over the decoy barge or is successfully engaged by the self defense systems.

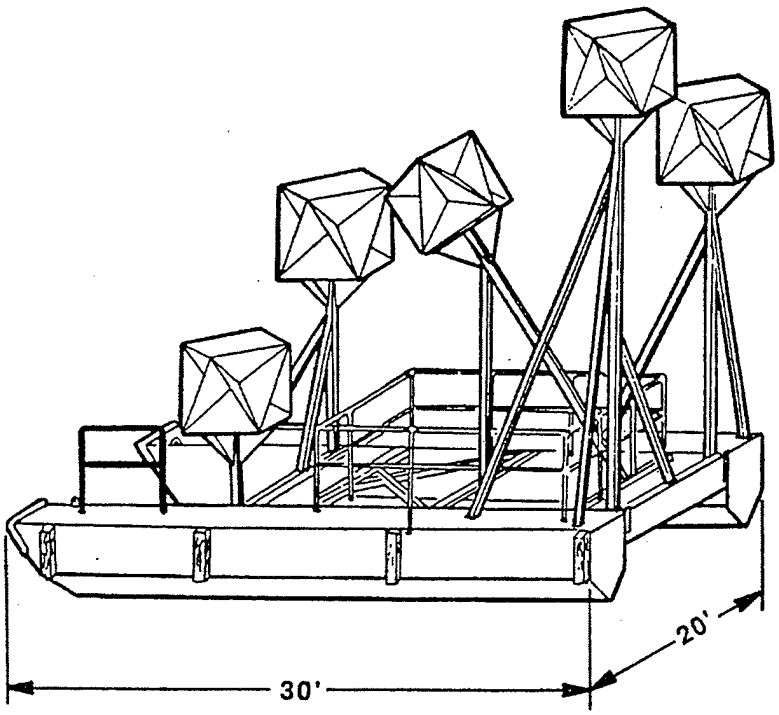

Figure 2- 4: Passive Decoy Barge for Actively Guided Missiles.

The test barges are mounted on pontoons and are 30 feet long, 20 feet wide, with a draft of 2 feet. The displacement is 10,000 pounds. The RCS of the barge is customized for each test event by setting the number and size of the reflectors. The barge is towed onto the range by a commercial range tug and taken under tow by SDTS at San Nicolas Island, as explained in the next section.

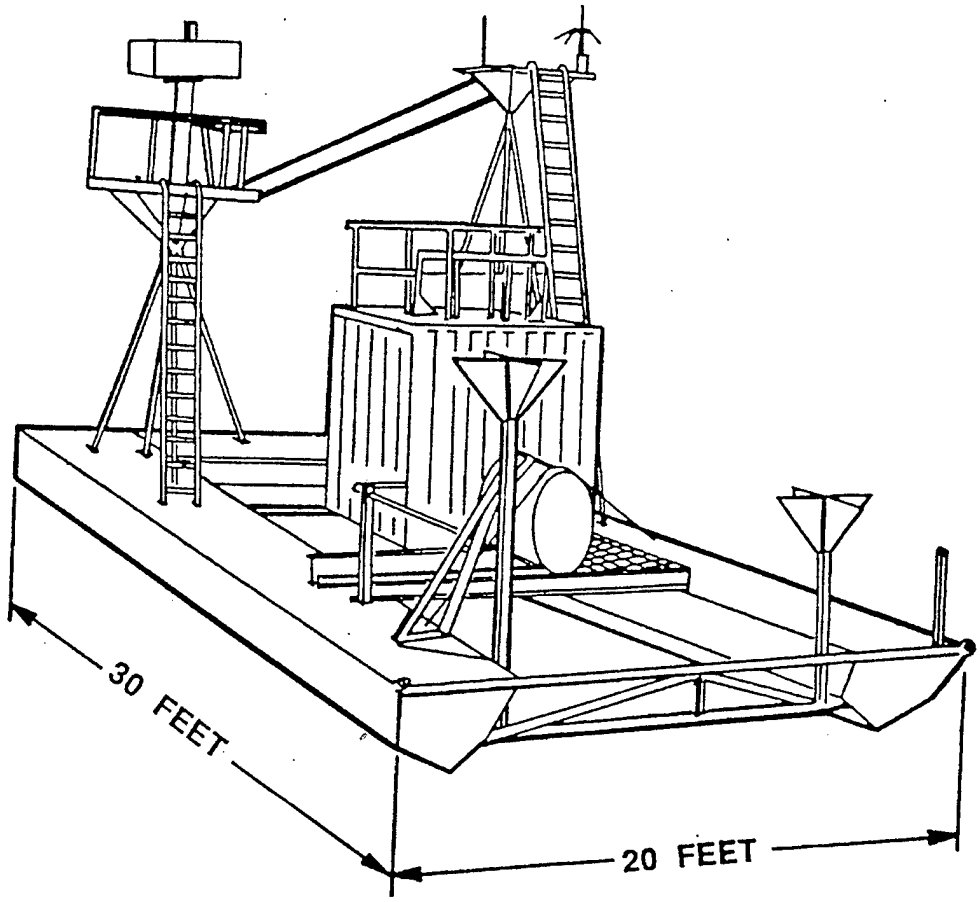

Figure 2- 5:Active Decoy Barge for Passively Guided Missiles.

2.3 Test Procedure

The test procedure used for a live fire event is well established. It is an integration of operators on board SDTS with operators at Point Mugu and Port Hueneme (Figure 2- 6).

Prior to getting underway, the self defense ordnance that will be used during this test is loaded into the ship's magazines. SDTS is fueled inport. The decoy barge is left in port to be towed by a range tug the day of the test.

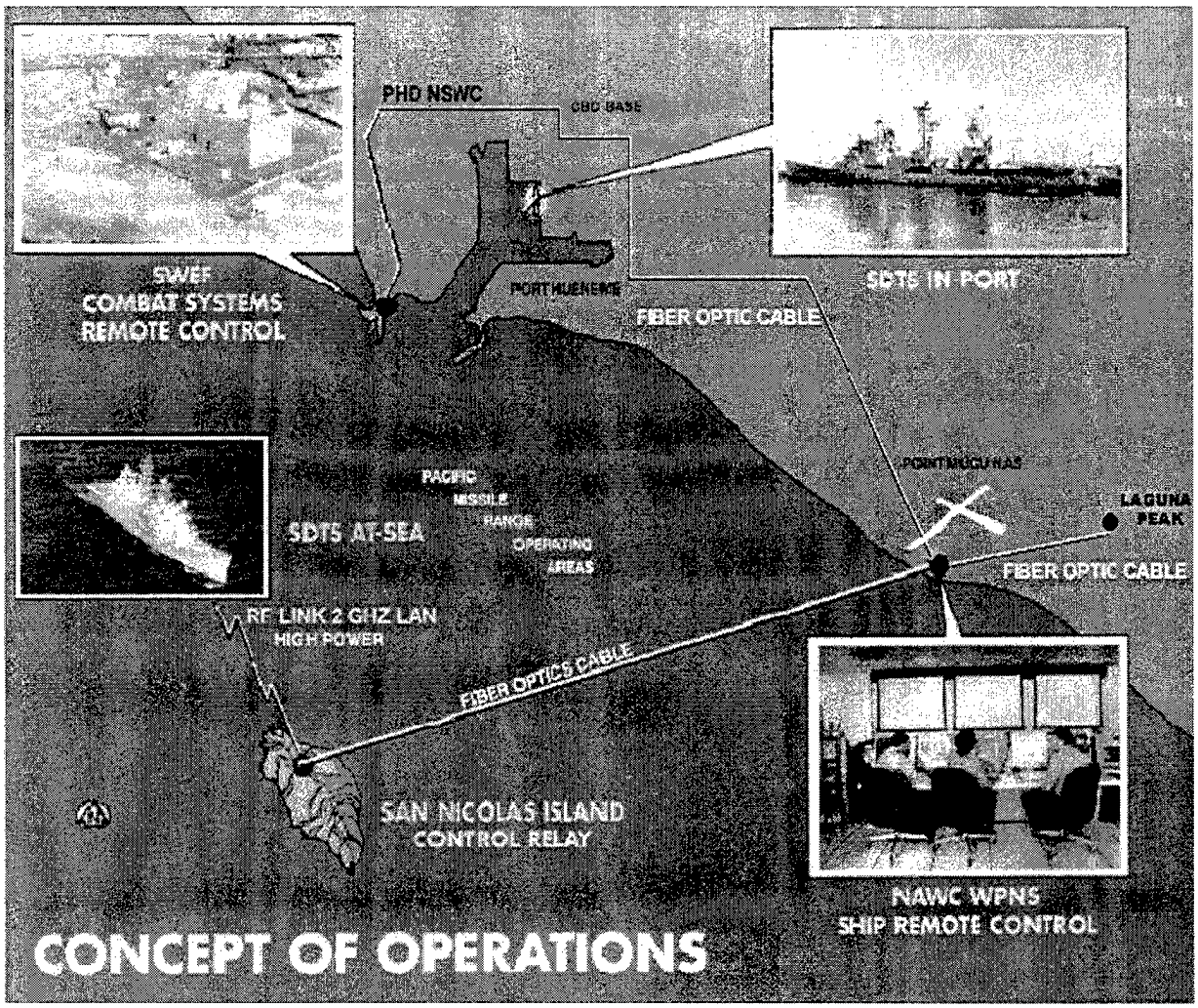

Figure 2- 6: Operation on the Pacific Missile Test Range.

SDTS has a maximum speed of 10 knots in calm seas. It must transit approximately sixty nautical miles from Port Hueneme to San Nicolas Island (SNI) in the Pacific Missile Test Range (PMTR). The ship gets underway one calendar day before the test event with the full test complement onboard. This complement includes the ships crew, all test event personnel, and engineers for other onboard systems. The total complement averages 60 people with a maximum

of 100 people. During the transit, and after traffic lanes have been cleared, the ammunition is uploaded into the weapons. SDTS anchors overnight in Dutch Harbor, SNI.

Several hours before the test event, SDTS rendezvous with the crew boat and the tug towing the decoy barge. At this rendezvous, the decoy barge is taken in tow, the non-essential crew and test team personnel are transferred to the crew boat via small boats, and the anchor is weighed.

SDTS gets underway with a skeleton crew: five ship control personnel and ten to twenty test project engineers and technicians. The Master, Government OIC, First Mate, and two engineers transit the ship into the test area, 25-30 miles from SNI. The test project engineers and technicians prepare and check the weapon systems and sensors. During the transit, SDTS is placed under remote control. The Ships Remote Control System (SRCS) controls the navigation of the ship. SRCS is managed by Naval Air Warfare Center (NAWC) at Point Mugu NAS. The Combat System Remote Control System (CSRCS) monitors and controls the weapons and sensors. CSRCS is controlled by the Surface Warfare Engineering Facility (SWEF) at Port Hueneme. Remote control system checks are conducted to ensure successful connectivity and control. As each system is placed under remote control, beginning about 5 hours before the test, the remaining personnel are evacuated by helicopter to SNI, five to eight people at a time. The helicopters are contracted civilian Jet Rangers and Long Rangers. About 2 hours before the test, the ship arrives in the OPAREA and conducts dry runs. Once the ship is under complete remote control (about 45 minutes before the test), the last personnel are removed by helicopter to SNI.

The Pacific Missile Test Range is controlled at NAWC Point Mugu. PMTR uses radar at Point Mugu and on San Nicolas Island for range surveillance. Upon the approval of range control, the test event commences. The target missiles are fired from SNI or from aircraft operating from Point Mugu. The SDTS engages the missiles, and SWEF monitors the performance of weapons with video and data feeds.

At the conclusion of the test, the weapons systems are safed electronically via the CSRCS. Explosive Ordnance Disposal (EOD) personnel are inserted by helicopter on the forecastle, not the flight deck which is in the CIWS arc of fire, to mechanically safe the weapons. Once the weapons are safed, ship's control personnel are delivered to the flightdeck to take local control of SDTS and return to SNI. At SNI, the SDTS anchors, all personnel return, and the decoy barge is transferred to the waiting tug. The weapons are downloaded to the magazines during the return to Port Hueneme.

[1] SDTS Replacement, At-Sea Live Fire Testing Surface Warfare Test and Evaluation Platform for the 21sr Century. White Paper, Port Hueneme Division, Naval Surface Warfare Center. January, 1999.

[2] Jane's Fighting Ships 1986-1987. Ed. Moore, John, CAPT RN. Jane's Publishing Inc. New York,1986.

Chapter 3: *Requirements Definition*

The ex-DECATUR fills a vital role in the weapons development process. However, it is at the end of its service life and a replacement is urgently needed. The replacement must provide all of the capabilities of the ex-DECATUR, but with more space, at higher speeds, and greater dependability.

The specific shortcomings of ex-DECATUR are:

- UNDERPOWERED- Even mild sea states can cause tests to be canceled at government expense.
- DEGRADED HULL- Significant hull corrosion will make SDTS unseaworthy in the near future.
- INSUFFICIENT VOLUME- The ship lacks space for additional systems and sensors.
- INSUFFICIENT BERTHING- Maximum capacity is 60 personnel. Berthing for 150 is frequently needed.

A Mission Needs Statement (MNS) was developed by PHD NSWC (Appendix C) detailing the deficiencies of ex-DECATUR and listing new needs for the successor ship. The faculty modified the MNS to make the design more academically challenging. The design team translated these needs into design requirements (Figure 3- 1). The design team utilized a systems engineering approach to accomplish this task. The first step was to clearly define what was required in the replacement. This began with describing the system desired by the customer, in this case PHD NSWC. These needs evolved into a complete set of design parameters in the Requirements Definition Process. This comprehensive list of "actions" serves as the foundation for the Operational Requirements Document (ORD). The ORD defines measurable parameters for each function. Any design that meets the requirements of the ORD can successfully perform as the SDTS replacement. Beginning with a comprehensive knowledge of the existing system, the shortcomings were analyzed and the procedures understood. The tasks that the replacement test ship must perform are captured in the Functional Flow Diagrams (FFD) (Appendix D). The conflicting tasks were resolved and inter-relationships identified. Different methods for meeting the requirements are studied in an Analysis of Alternatives (Section 6). One of these alternatives, actually a hybrid of the alternatives, is fleshed out in the conceptual design.

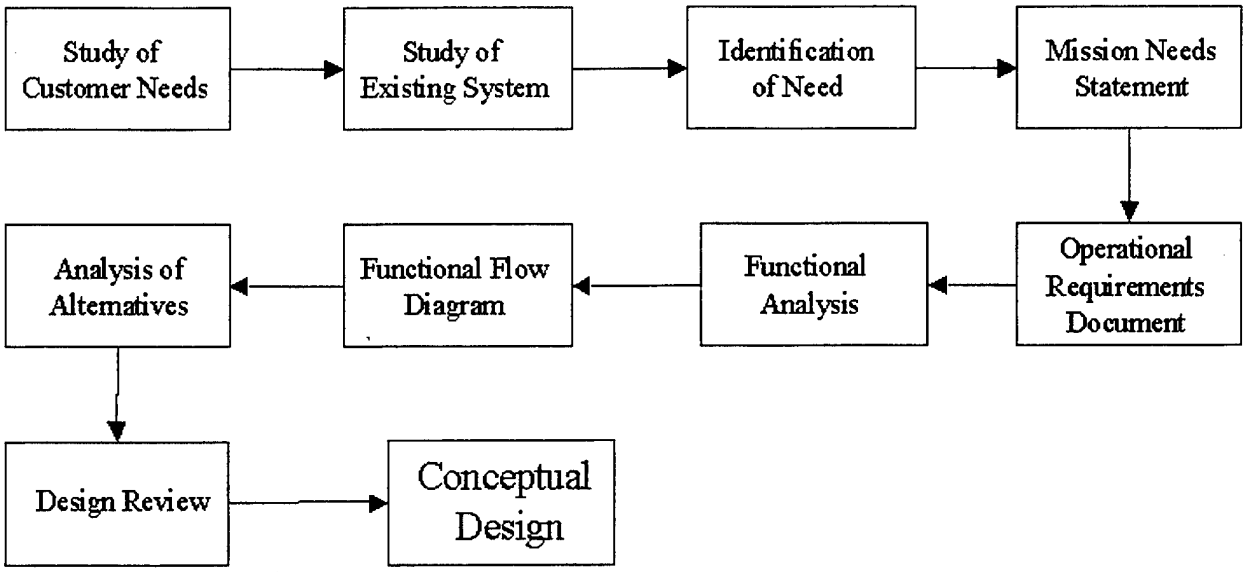

Figure 3- 1: Feasibility Study Flowchart.

The existing system, the hardware and procedures, has been reviewed in Section 2, and the shortcomings illustrated. PHD NSWC has defined specific requirements. Based on a study of existing commissioned hulls conducted by PHD (Appendix B), the SDTS replacement will be a converted SPRUANCE class destroyer. The decision to convert a DD 963 is based upon the existing hardware, large volume, and significant propulsive power. The proposed hull is USS O'BRIEN (DD 975) based upon an anticipated decommissioning date of 2001. The Analysis of Alternatives will use O'BRIEN as the unmodified hull.

3.1 Mission Needs Statement

In accordance with DoDInst 5000, PHD drafted a Mission Needs Statement. The Mission Needs Statement (MNS) is the starting point for the system design. It documents the un-met need of the Navy. In this case, the SDTS needs to be replaced. The MNS identifies the shortcomings of SDTS. It defines what capabilities are required to solve the deficiency. The Mission Needs Statement does not suggest a solution, but it does explain what the solution must be capable of performing.

The capabilities required by the Mission Needs Statement are highlighted here. The entire MNS is included as Appendix C.

- Sustained speed of 15 knots.
- Improved personnel transfer via helicopter and small boat.

- Observable signatures reduced to maximize probability of target homing on towed decoy barge.
- Size and configuration to accomplish simultaneous installation and testing of multiple weapon systems.
- Support future testing of:
  - Battle Group Interoperability/ BGI System Integration Tests.
  - Vertical Launch Enhanced Seasparrow Missile
  - LPD 17 Systems (SSDS Mk II)
  - DD 21 Related Projects

3.2 Operational Requirements Document

The Operational Requirements Document (ORD) is a strong tool for the design team. The ORD is derived from the MNS. It defines acceptable Measures of Performance (MOP). This comprehensive list of MOP's sets a measurable quantity for every function that the ship must perform. Any design that fulfills every aspect of the ORD will satisfy the mission of the replacement test ship. The ORD for the replacement ship is presented in Appendix E.

Acceptable Measures of Performance have two levels: Threshold and Objective. Threshold parameters are the minimum acceptable performance. Objective parameters are the best-desired performance. SWTS must meet the threshold requirements. Performance in excess of the objective parameters is not required and seldom beneficial.

Several of the requirements defined in the Operational Requirements Document had significant impact on the overall design of the replacement ship. Foremost among these, the replacement ship shall: (the requirement line numbers from the ORD are listed in parenthesis):

- Be capable of testing many systems currently under production for surface ship installation. (4.a.10)
- Support simultaneous installation of SSDS Mk2, LPD 17 version, plus SPS-49A, and the most limiting system from above (4.a.11).
- Have a Radar Cross Section less than DECATUR (threshold), objective is 10% of DECATUR RCS. (4.a.17)
- Be converted from steam services to electric services. (4.a.26)
- Be capable of transferring personnel by boat and helicopter. (4.a.13 and 14)
- Provide berthing for 150 personnel for 12 days, including berthing for 12 females. (4.a.18)
- Have 15 knot top speed and an endurance of 12 days (4.a.2)
- Use one engineroom as an HM&E test platform.(4.a.27)

3.3 Functional Analysis

The ORD describes what the replacement ship must be capable of performing. These capabilities are top level requirements. The functional analysis describes each function that the ship must perform in order to support the top-level requirements. For example, if the ship must be capable of 15 knots (top level requirement), the ship must also be capable of taking on fuel, lighting off the engines, and getting underway. The product of the Functional Analysis is a sequence of Functional Flow Diagrams (FFD). These diagrams are included as Appendix D.

The FFD shows relationships of functions. Precursor functions are shown before subsequent functions. Identifying the functions that the replacement ship must perform defines the requirements of the ship. Particularly in the case of a conversion, the functions must be well defined. The existing functions can easily be identified and retained; however, the added functions must be integrated into the ship. The FFD's uncovered several additional functions that the design team needed to add to the ship in order to fulfil the ORD. The functions are

- Control ship access.
- Monitor for fire and flooding electronically.
- Provide internal ship Local Area Network.
- Deploy and recover the Decoy Barge.
- Install the Ship's Remote Control System and Combat Systems Remote Control System.
- Transfer Personnel Underway via Helicopter and Boat
- Reduce Radar Cross Section.
- Berth Civilian Crew.
- Eliminate Steam Services.

These functions define "what" must be done. "How" the functions are completed is determined within the Analysis of Alternatives, and the various ways to accomplish the functions makes each alternative unique. The Operational Requirements Document is the primary guidance for the ships design. Four alternatives are presented in Section 6 that meet the requirements set forward in the ORD. Therefore, each is an acceptable alternative from a performance perspective. Section 6.8 details the conclusions of the AoA. This design review determines the alternative that is the basis for the Conceptual Design.

The replacement ship is designated the Surface Warfare Test Ship (SWTS).

3.4 Threat Analysis

SWTS faces a specific threat: Anti Ship Cruise Missiles (ASCM). It is not expected to encounter torpedoes, mines, or gunfire. Any requirement to test defensive systems against these other threats would likely impose requirements on the SWTS in excess of those contained in the ORD. Presently, PHD NSWC uses seven varieties of ASCM. The SWTS must be optimized to face any of these threats. A study of the target missiles enables calculations for the required Fields of View for sensors. Two of the target missiles have active homers. To maximize the relative signal of the decoy barge to the SWTS, the Radar Cross Section of SWTS must be minimized at the frequencies of these emitters.

3.4.1 Target Missile Profiles

PHD NSWC uses seven types of ASCM as targets. Because the ASCM is the target of the Self Defense weapon system that is being tested, it is called the "Target Missile". The seven targets are listed in Table 3- 1[1,2]

Target	Harpoon AGM-84	Vandal MQM-8G	Vandal ER	Vandal EER	Exocet MM-40	HARM AGM-88	SETT-8
Midcourse Flight Profile	Low	High Or Low	High Or Low	Low	Very Low	Medium	CLASSIFIED
Terminal Flight Profile	Sea Skim or Pop-Up	High Dive or Skim	High Dive or Skim	High G maneuver	Very Low	Medium	
Guidance	Active Ku Band	Passive	Passive	Passive	Active I Band	Passive	
Speed	0.85 M	2.5 M	2.5 M	2.5 M	0.9 M	0.9 M	
Dia. [inch]	13.5	30	30	30	13.7	10	
Area [sq in]	143	706	706	706	147	79	
Weight [lbs]	1145	4409	4409	4409	1884	798	

Table 3- 1: SDTS Order of Battle.

These missiles cover the range of current ASCM threats and are representative of current threats faced by the United States Navy. The targets will not change in the near future. The

missiles vary in size, signature, speed, and flight profile. The flight profiles vary from sea skim, sea skim with terminal popup, and high dive. The Vandal EER has a high G terminal "jink" designed to confuse self-defense systems. The targets can be air-launched or launched from San Nicholas Island. The missiles are fired in salvos as determined by the test requirements. Most salvos are one or two missiles.

The active seeker frequencies are between 8 and 18 GHz. These are the frequencies of interest for Radar Cross Section performance evaluation.

---

[1] Friedman, Norman. World Naval Weapon Systems. The Naval Institute Press. Annapolis, MD. 1989.

[2] Jane's Weapon Systems 1988-89. Jane's Information Group, Inc. Alexandria VA. 1988.

Chapter 4: *Design Philosophy*

The Design Philosophy is a decision-making strategy. It provides a prioritization of design goals for the entire design team to use. The decision to convert the USS O'BRIEN limited the scope of the design by defining the hull, superstructure, and engineering plant.

The O'BRIEN has ample room to install any of the systems required by the ORD. The benefit of spaciousness is offset by the increased Radar Cross Section (RCS). The damage to SDTS caused by the Harpoon hit in May 1999 placed a high priority on signature reduction.

The mission of O'BRIEN will change from warship to test platform. As a test platform, the threat will be directed to arrive from aft of the beam. The locations of the weapons and sensors can be designed to have unobstructed Fields Of View (FOV) from the aft aspect.

The SWTS must provide a large degree of flexibility to the test engineers. This includes defining maintenance and meeting areas for the test personnel.

Safe operation of the ship is a vital requirement. This encompasses normal evolutions as well as evaluating and improving the method for boat and helicopter personnel transfers.

The SWTS will have different berthing standards than a warship. The comfort of the civilian crew and test personnel as well as the need to provide an on board environment conducive to creative problem solving requires a change in the current berthing arrangements.

Minimizing the maintenance requirements and manning lessens the operating costs. The largest impact of this is the removal of steam from the ship and installation of electric services. The costs will also be leveraged (described in Section 16.1) by providing a test platform for other types of testing such as a HM&E test engineroom and new underway replenishment equipment.

Because the systems that will be tested will change over time, providing room for future growth is important. This growth will take the form of additional weapons and sensors. One can readily anticipate that future self defense systems will be more complex with more components than current systems.

If a system, such as SONAR, will not be used by SWTS, but the space is not needed for another purpose, the system will be laid up in place to conserve cost.

This design philosophy is the basis for design trade off decisions to maximize the SWTS's performance as a whole platform. The complete list of priorities is given as Table 4-1.

Design Philosophy

1. Radar Cross Section Reduction
2. Large Field of Views
3. Test Flexibility
4. Safety
5. System and Sensor Flexibility
6. Ability to test widest range of systems
7. Accessibility to systems and sensors for maintenance/installation/removal
8. Room for Future Growth
9. Minimum Manning
10. HM&E Testing
11. Comfort of Crew and Riders
12. Redundancy
13. Survivability
14. Minimum Modifications
15. Low cost
16. Battle Group Interoperability
17. Recommisionable

Table 4-1: Prioritized Design Objectives.

Chapter 5: *Projected Capabilities*

The SWTS will replace SDTS, but the remaining infrastructure of PHD and PMTR will not change. SWTS must integrate easily into these existing programs. The SWTS must function with the decoy barge, helicopters, and boats currently used on the range. The first system that will be tested is the Ship Self-Defense System (SSDS). Many of the SSDS sensors will remain on board the SWTS after SSDS is completed.

5.1 SPRUANCE Class Destroyer

The proposed hull for the SWTS conversion is USS O'BRIEN (DD 975). O'BRIEN is scheduled to decommission in 2001. Like all SPRUANCE hulls, O'BRIEN was designed as an anti-submarine warfare ship, and the strike capability was added later. It is not equipped for anti-air warfare. O'BRIEN has an aluminum superstructure, and the Bridge and Combat Information Center (CIC) are spacious. It has been modified to carry two SH-60B helicopters in its hangar with twin Recovery, Assist, Secure, and Traverse (RAST) tracks. The specifics of the O'BRIEN's hull are listed in Table 5- 1 and the topside arrangement is shown as **Error! Reference source not found.**.

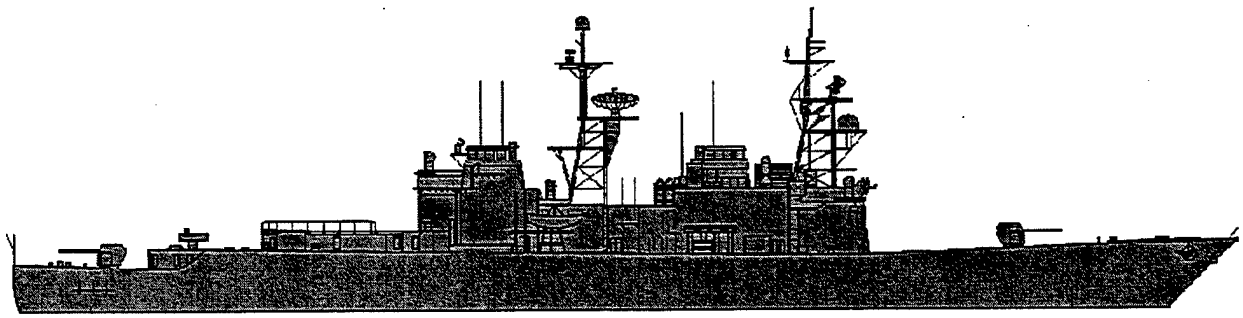

Figure 5- 1: SPRUANCE Class Destroyer with VLS Profile.

Length	563 feet
Beam	55 feet
Displacement	8,200 tons
Draft	30' 6; forward, 20' 6"aft
Armament	two 5-inch 54 caliber LWG two Mk 15 20 mm CIWS two triple-tube torpedo launchers Mk 29 NATO Seasparrow Missile System Harpoon Cruise Missile System Mk 41 Vertical Launch System
Aircraft	2 SH-60B Helicopters
Propulsion	4 General Electric LM 2500 gas turbines total of 80,000 shaft horsepower
Speed	30+ knots
Complement	22 Officers 22 Chief Petty Officers 320 Enlisted
Date Launched	17 July 1976
Date Commissioned	3 December 1977

Table 5- 1: USS O'BRIEN Characteristics.

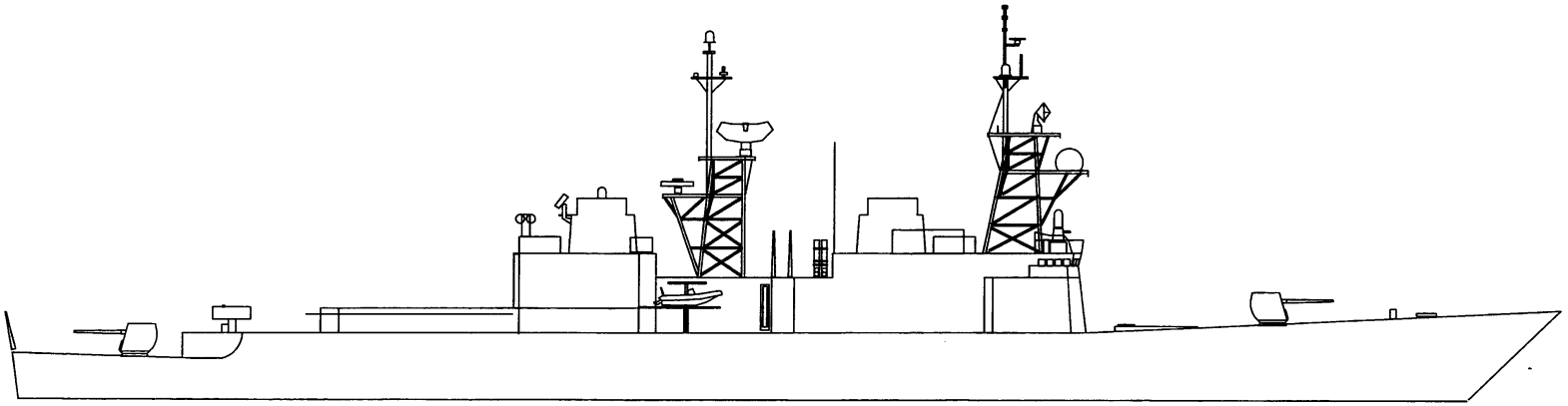

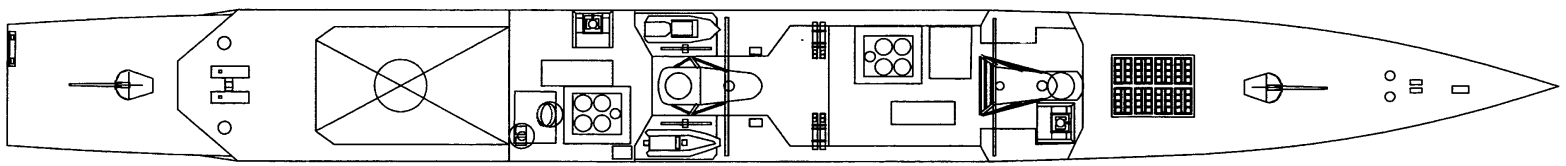

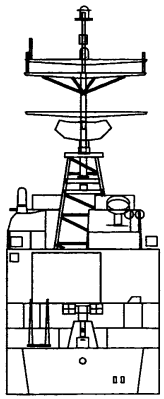

Standard SPRUANCE-Class
Configuration

Figure 5.2

5.2 Payload

The O'BRIEN is a SPRUANCE Class Destroyer with the Vertical Launch System (VLS). The configuration of the O'BRIEN is shown as Figure 5- 2. The O'BRIEN has two Mk 45 five inch 54 caliber Light Weight Guns. The forward 5" gun is Mount 51; the aft is Mount 52. The two CIWS mounts are named similarly: Mount 21 is installed on the 04 level forward, starboard side; Mount 22 is installed on the 04 level aft, port side. The Harpoon missiles are mounted on the 03 level midships on the "Harpoon Deck." The Mk 91 NATO Seasparrow Missile System (SWY-1) is Mod 0, so there is only one Mk 95 director installed. The Mk 29 NATO Seasparrow Missile Launcher is on the "Missile Deck," the 01 level aft of the flight deck. O'BRIEN has a 61 cell Mk 41 VLS launcher on the forecastle.

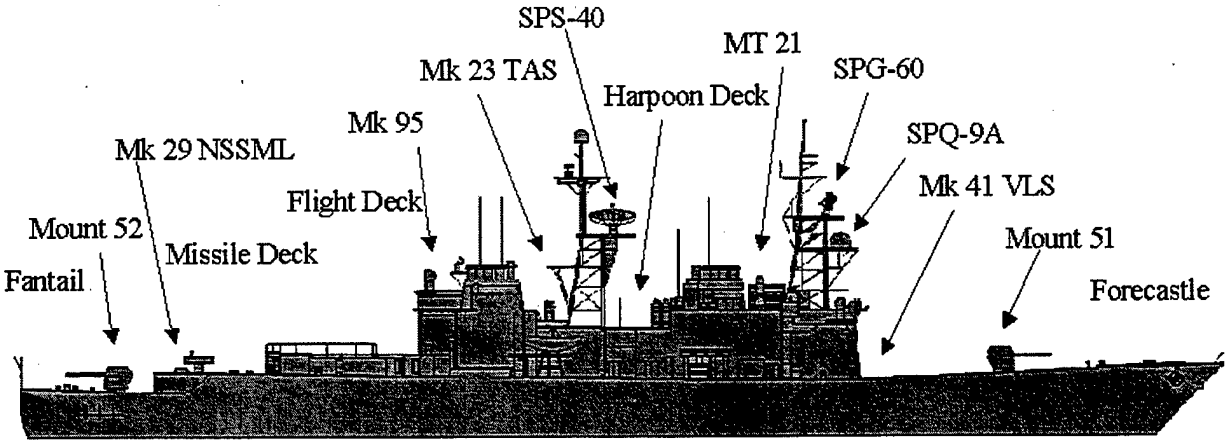

Figure 5- 2: USS O'BRIEN Weapons and Sensors.

The O'BRIEN possesses significantly more deck space and internal volume than the DECATUR possesses. All of the systems presently installed on DECATUR will easily fit on O'BRIEN. The major internal arrangements challenge is the Ship Self-Defense System (SSDS) as configured for LPD-17 (SSDS Mk 2 Mod 2). Table 5- 3 lists the requirements of this system. PHD NSWC has additionally requested that an SPS-49A radar and CIWS Block 1B be installed. A camera mounted on a CIWS pedestal monitors inbound targets and records the engagement of

those targets. This "CIWS Camera Mount" must be located near the CIWS and boresighted to the CIWS mount to minimize parallax errors.

A second Mk 91 NSSMS director must be added to meet the SSDS Mk 2 Mod 2 requirements. Although SSDS does not require a five-inch gun, one will be retained for possible future testing.

LPD 17 Configuration	USS O'BRIEN (DD 975) Configuration
Detect	
SPQ-9B SPS-48E SPS-49 ** SPS-73	SPQ-9A SPS-40 Mk 23 TAS CIWS BLK 1A SPS-55
ESM	
SLQ-32A(V)2	SLQ-32A(V)2
Controls	
ACDS RNSSMS	SWY-3 NTDS RNSSMS
Engage	
RNSSMS RAM BLK 1 CIWS BLK 1B ** 5"/54 Mk 45 LWG**	RNSSMS RAM BLK 0 CIWS BLK 1A 5"/54 Mk 45 LWG

** Systems not part of SSDS, but requested by PHD NSWC.

Table 5- 3: SSDS Mk 2 Mod 2 Configuration and USS O'BRIEN's Combat Systems Suite.

5.3 Berthing

The SPRUANCE is designed for a crew of 22 Officers, 22 CPOs, and 320 enlisted. The entire SPRUANCE class has been modified for integrated (co-ed) crews. The Officer's berthing has thirteen staterooms and a CO's inport and at sea cabins. CPO berthing is split for nineteen males and three females. The crew berths in six spaces with between twenty-four and seventy-two bunks in standard Navy three rack tiers. Each berthing space has a dedicated shower room and head. Only the CO's cabins and the XO's stateroom have a private head and shower.

5.4 Hull, Mechanical and Electrical

The O'BRIEN's engineering plant consists of two engine rooms and three auxiliary machinery rooms. Each Engine Room has two Gas Turbine Engines for propulsion and one Gas Turbine Generator (GTG) for electric power. A third GTG is located on the starboard side of the second platform below the missile deck. Hotel services are provided by steam. The O'BRIEN is a sturdy, well-powered ship.

Chapter 6: *Analysis of Alternatives*

The conversion of a DD 963 class destroyer into the SWTS requires the modification of a warship to a remote-operated ship as guided by the design philosophy. To meet the thresholds and objectives that have been set by the ORD, the design team proposed four different alternatives. All of the alternatives have the same baseline, consisting of the hull, superstructure, and engineering plant of the DD 963, weapons and sensors of the SSDS, the remote control systems and berthing/messing arrangements. These aspects, common to all alternatives, are presented in Section 6.1.

In the following analysis, only the differences between the four alternatives are discussed along with the advantages and disadvantages of each. The internal volume of the O'BRIEN easily accommodates the required payload, therefore, internal arrangements are relegated to the detailed design phase (Section 7.2). The conclusions of the Analysis of Alternatives are the basis for the conceptual design.

6.1 Aspects Common to all Alternatives

The baseline vessel for the design is a DD 963 class destroyer. USS O'BRIEN (DD 975) is assumed to be the proposed hull. In addition to the combat systems payload, aspects common to all the alternatives include the HM&E configuration and the habitability arrangements.

Stability

A worst case stability condition is the basis for the preliminary stability analysis. The analysis calculates the effect on the stability of the DD 963 hull with the addition of the SWTS payload. This includes the SPS-49 and SPS-48 radars, CIWS camera mount, reduced RCS panels (superstructure and masts), RAM launcher, and the removal of the VLS weapons. The results are a 0.18-ft increase in KG and a slight decrease in the righting arm at large angles of heel. The analysis concludes that the DD 963 hull has ample stability for the SWTS conversion.

Hull, Mechanical, and Electrical Design (HM&E)

The SWTS utilizes the existing DD 963 Hull, Mechanical and Electrical systems to the maximum extent possible. Major changes to the HM&E configuration include; dedication of one engine room as a HM&E test bed, single shaft operation, and the conversion of all steam auxiliaries to electric.

Habitability

The SWTS will improve upon the existing DD 963 habitability configuration. The ship will support 150 personnel (including 12 females) for 14 days underway. The berthing compartments will be outfitted to provide more personal space for the civilian crew. Galley facilities will be modified to efficiently meet the needs of a smaller crew with few long underway periods.

6.2 Alternative A: Minimum Change Version

The Minimum Change version incorporates all the components of the SSDS MK2 (see Section 5.2) plus the SPS-49A. **Error! Reference source not found.** details the topside layout. The existing masts and superstructure are used to mount all the sensors and weapons with the exception of the CIWS camera mount. A camera platform is installed on the port side of the flight deck to mount the camera. This position places the camera near the CIWS (Mount 22) to minimize parallax error. Mount 22, located on the 04 level aft, has a field of view on the port side and aft only. In this alternative, the capability of engaging targets is limited to the port side only. The magazine on the 04 level aft will be maintained for the CIWS ammunition and the NSSM magazine on the missile deck will store the rest of the ship's ammunition. The starboard boat deck houses one rescue boat; the port boat deck is not used.

Major Modifications: The Radar Cross Section must be reduced to match the magnitude of ex-Decatur in order to make Alternative A competitive. Because Alternative A is limited to port side engagements, the RCS of concern is the port aspect. Major reduction in RCS is achieved by removing the clutter from the hull and the superstructure. This clutter consists of firefighting equipment, underway-replenishment equipment, the port boat and davit, and life raft stowage

racks. This equipment is permanently removed or stowed in covered areas. For further reduction of the RCS, the top pole masts are removed as well as the yardarms above the SPS-48E platform.

Various sensors are added to increase the engagement effectiveness and the testing capability of the SWTS. The Mk 23 TAS, SPG-60 and SPS-40 radars are removed. The SPS-49A radar is added on the forward mast on the former SPG-60 platform. The SPQ-9A is removed and replaced by a SPQ-9B, mounted at the Mk 23 TAS platform (aft side of the aft mast). SPQ-9B's field of view must be unobstructed in the aft and port aspects because it is the primary designation sensor for RAM. The second additional Mk 95 NSSMS director is mounted on the port side of the forward mast. The existing Mk 95 director remains on the 04 level on starboard side. The SPS-48E is mounted on the aft mast on the former SPS-40 platform. The mast above the SPS-48 is removed.

Mount 51 is retained while Mount 52 is removed. The VLS and aft CIWS remain in their current positions, while the RAM launcher is added to the aft port corner of the fantail. The Mk 29 NSSMS Launcher is removed. The removal of NSSMS and Mount 52 provides space for future testing of weapons that can be placed on the missile deck or fantail.

Advantages: The primary goal of this version is to minimize the conversion costs. The minimum change version incorporates all the requirements set by the customer (PHD) while minimizing structural changes. The extended SSDS (including SPS-49) will allow a continuous test and evaluation platform under live-fire conditions that will give vital information for future modifications for the SSDS Mk-2.

The existing weapons system placement is maintained to the maximum extent in order to reduce the cost and time for the conversion of the SWTS. Despite the CIWS camera platform on the forward port corner, the flight deck remains operational and free of clutter with no need for further certification for flight operations. The free space on the fantail and missile deck provides ample space for future growth or the addition of new components to the SSDS.

Disadvantages: The main disadvantage of this version is it is capable of port side engagement only. The reduced fields of view for weapons and sensors do not allow the full use of the capabilities that the SSDS components currently provide.

The large RCS of Alternative A will require the RCS of the decoy barge to be augmented during tests of active-homing threat missiles.

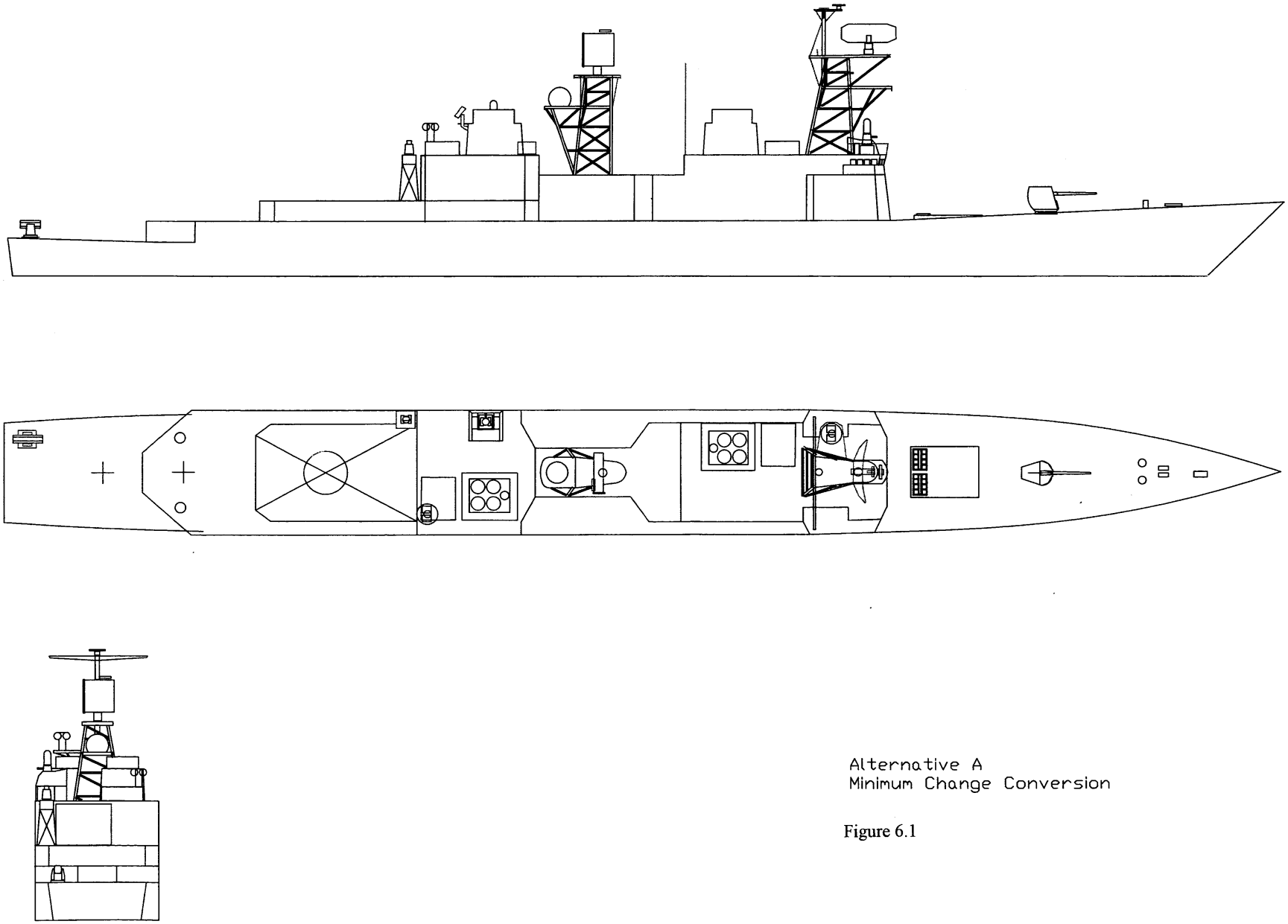

Alternative A
Minimum Change Conversion

Figure 6.1

6.3 Alternative B: Improved Version

The Improved Version includes all the weapons and sensors of the minimum change option with minor modifications to the superstructure and to the external arrangement of the combat systems and sensors. It is shown as Figure 6- 1. A lower RCS is achieved through the extensive use of Radar Absorbing Material (RAM), reduction of the top part of the masts, and other modifications to the superstructure. A distinctive modification in this version is the barge ramp. Another new feature is the Enclosed Accommodation Ladder, an improved means of transferring personnel at sea. The flight deck remains operable and the use of the hangar remains the same as in the minimum change option. The improved arrangement of sensors and weapons enables Alternative B to conduct engagements on both the port and starboard sides.

Major Modifications: A significant effort is made to reduce the RCS of Alternative B. Bulkheads on the superstructure are covered with RAM material. On the boat deck, a bulkhead covered with RAM material is added at the deckedge to shield the boat and midships area. RAM panels are added on the masts. Doors in the panels allow access into the mast enclosure, and interior access ladders provide maintenance access to the mast. The panels are of low density so the stability of the ship is only slightly effected as explained in Section 9.8.4.

Mount 51 is maintained to test future gun modifications. The RCS of the gun is substantially large, so a covering will be constructed and placed whenever Mount 51 is not included in tests. This case is constructed of lightweight material and with slopped sides covered with RAM material to minimize RCS.

The same stealth construction technique is implemented on the base supporting the CIWS and the CIWS camera. The CIWS (Mount 22) and the CIWS camera are moved to the starboard side of the missile deck. This allows both systems an unobstructed field of view aft of the beam.

New base mountings are used for the platforms of the Mk-95 directors, which are located over the aft intakes. This mounting will set the directors one over the other to save space and increase the field of view. The RAM launcher is moved to the starboard side main deck at the stern. This is the current installation location for RAM launchers in the fleet.

The barge ramp is located at the stern just aft the former location of MT 52. A detailed description of the Barge Ramp is given in Section11.3.1. The width of the stern is satisfactory to accommodate both the ramp and the RAM launcher. With this ramp, the need for target tow services is eliminated. This will save a minimum of $18,000 per test.

The second innovation in this version is the Enclosed Accommodation Ladder (EAL). On SDTS and Alternative A, accommodation ladders are used to transfer personnel at sea. The EAL provides safer transfer during the tests with no contribution to the RCS of the ship. The EAL is a cofferdam with two watertight doors in the side of the hull. The door heights allow personnel to transfer from the ship to a tug or a smaller boat in a variety of sea states. A detailed description of the AEL is given in Section 11.2.1.

Advantages: The ability to engage targets on port and starboard sides aft of the beam is the largest improvement over Alternative A. There is also significant RCS reduction. The installation of the barge ramp and the AEL increase the life-cycle savings and operability of the SWTS. The cost is minimized in a version with a reduced RCS. The full use of the hangar and the flight deck is an advantage for flight operations. There is still space for future installation of one more large system on the fantail.

Disadvantages: Although the RCS is reduced to a level lower than that of ex-Decatur, it remains high for the standards of the ORD. The location of CIWS at the missile deck introduces two disadvantages. First, the low height reduces the acquisition range for sea skimming targets. Second, because the CIWS radar dome is higher than the flight deck, the helicopter angle of approach is more restricted. Lastly, the height of the RAM launcher obstructs a small portion of the CIWS camera's field of view at 180° Relative.

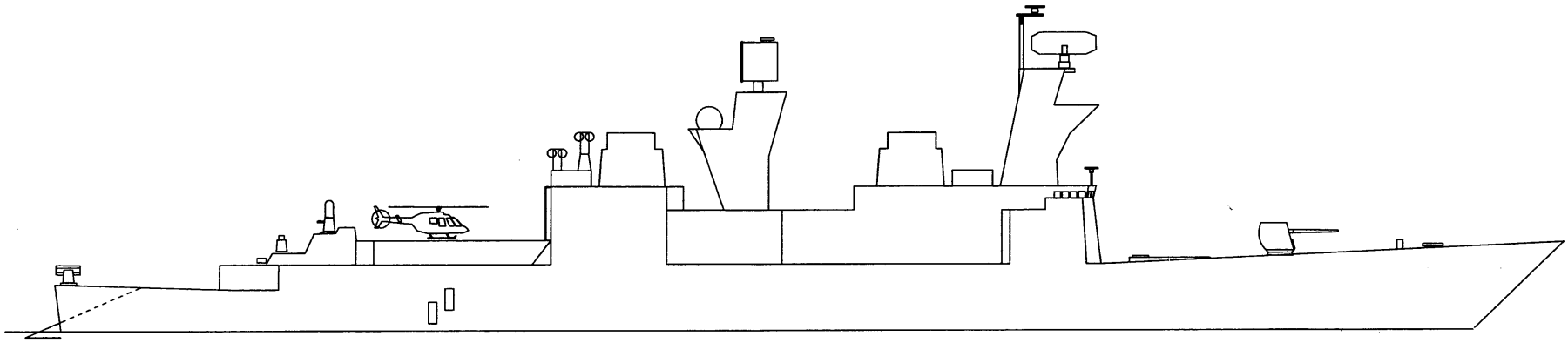

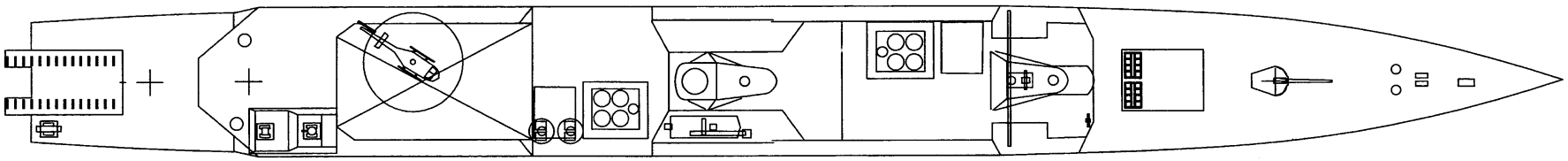

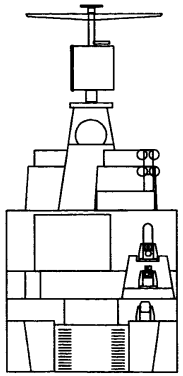

Alternative B
Improved Conversion

Figure 6.2

6.4 Alternative C: Optimized Version

General Description: The Optimized version introduces radical changes to the topside layout. These changes significantly reduce the RCS, increase the fields of view of all the weapons and sensors, make flight operations safer, and increase the space available for future growth. The topside arrangement drawing is shown as Figure 6- 2. The flight deck is moved forward in place of Mount 51. A new structure, the Aft Weapons Platform, is built on the former flight deck to support SSDS weapons. Mount 52 is retained for testing future gun modifications. More liberal use of RAM material and superstructure shaping reduces the RCS to almost half of the O'BRIEN's original RCS. The barge ramp and the EAL are also incorporated in this version. Alternative C possesses significant operational improvements over the previous alternatives.

Major Modifications: Moving the flight deck forward is the most significant modification from the previous alternatives. The ex-DECATUR's flight deck platform is transferred to SWTS and mounted forward of the VLS launcher on the site of Mount 51, which is removed. Using the ex-DECATUR's flight deck minimizes the installation cost of the move and provides a proven platform. When the SWTS is aligned for remote operation, the last personnel extraction and first insertion is conducted with the weapon systems armed. The flight deck's forward location means the helicopter never has to enter the arcs of fire. This increases the safety of the flight operations. In the event that a target missile hits SWTS during test operations, there is less chance that the forward flight deck will be damaged since it is forward and away from high RCS objects and active emitter components. The main disadvantage of the forward flight deck is the loss of hangar for helicopter stowage, but the use of hangar was infrequent and not identified as a requirement. Another disadvantage is that in heavy seas landing would be more difficult because the forward location will have more motion. The landing envelopes are listed in the Classified NATOPS manual using the forward Vertical Replenishment Station tables.

To reduce RCS, sloped lightweight RAM panels (similar to those used on masts) are installed along the superstructure below the missile deck and former flight deck. RAM material is added on the aft face and door of the hangar. RAM panels are added to the bridge wings to eliminate dihedrals.

All of the sensors remain in the same locations, but the weapons are moved to higher positions. All the weapons, with the exception of the VLS launcher, are located aft. On the flight deck, the aft weapons platform is constructed to support the RAM, CIWS, and CIWS camera. RAM is installed on the aft starboard corner of the flight deck. CIWS is placed on the first step, above and forward of RAM. This position provides CIWS with an unobstructed field of view. The CIWS camera is installed on the second step, above and forward of CIWS. It also has on unobstructed field of view. With this configuration the camera is higher than the CIWS gun which is an arrangement that is preferred by PHD. The stair step structure allows the missile deck to remain free for future installations. The location of MT 52 does not interfere with barge ramp operations as described in Section 11.3.1.

Advantages: The extended fields of view and the reduced RCS are the main advantages of Alternative C. The forward flight deck allows nearly 270 degrees of coverage by the aft mounted SSDS weapons and sensors. The stair step structure provides co-location of CIWS and camera mount and protected maintenance enclosures for both of them. The higher location of the RAM launcher protects it from heavy seas and towing operations.

The space for future installations is maximized with the complete missile deck available as well as areas on the 04 level aft, former flight deck, and port side of the fantail. The port side of the former flight deck is open for craning equipment on and off the ship with full access to the hangar for stowage.

The safety advantages of the new flight deck location have been described. The flight deck location, barge ramp, and the EAL increase the safety of personnel through the range of operations.

Disadvantages: The conversion costs increase in this version mainly due to the extensive relocation of the weapons and flight deck. New procedures for landing must be established to ensure safe operations.

The total RCS is still higher than 50% of the original ship, due to retention of wall-sided superstructure. This falls short of the ORD objective target of 10%. Mount 52, though covered when not operable, increases RCS and occupies a significant space that could be used by future installations.

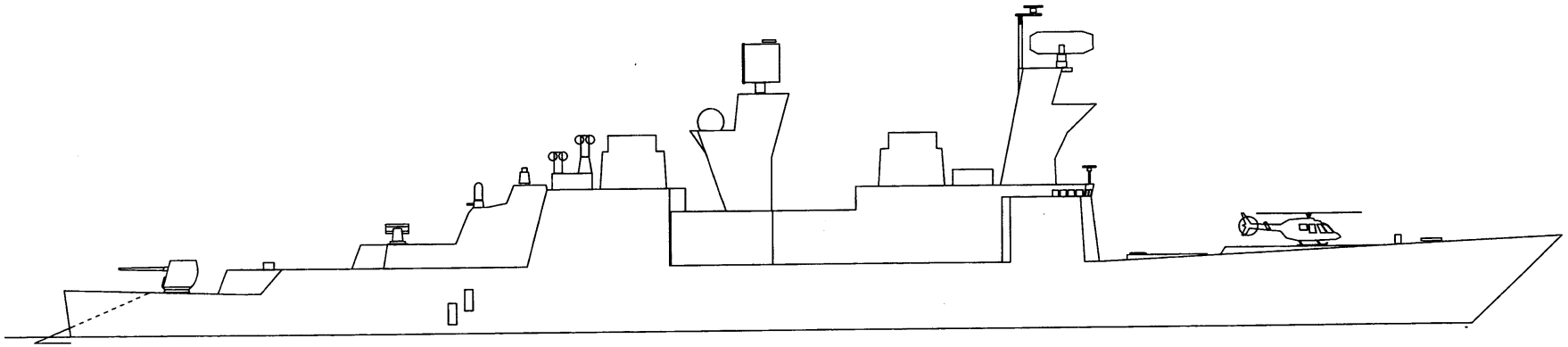

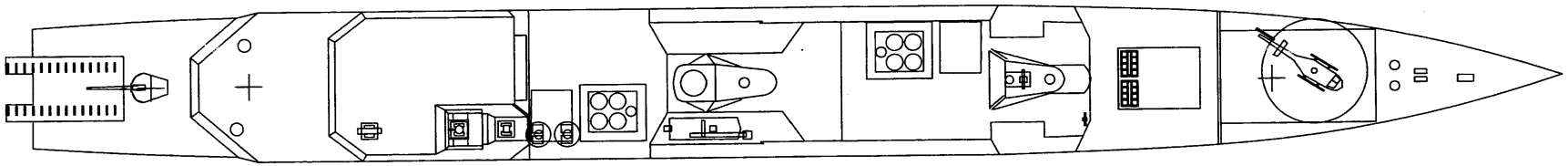

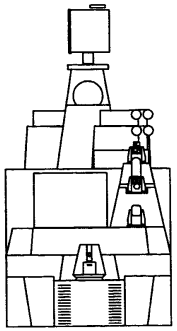

Alternative C
Optimized Conversion

Figure 6.3

6.5 Alternative D: Ideal Version

General Description: As the name suggests, the Ideal Version incorporates major measures for stealth construction by reshaping the entire superstructure. It is the only version that reduces not only the RCS but also the IR signature. These modifications are viewed in Figure 6- 3. The masts are removed and the new AEM/S used in USS RADFORD and LPD-17 are placed forward and aft respectively. The location of weapons is the same (including the covering case for the aft 5"/54 gun) and the arc of fire remains close to 270°. The aft weapons platform for the CIWS and the camera is constructed as in Alternative C. RAM material is extensively used on the superstructure and the hull. The barge ramp is incorporated. The EAL and the forward flight deck increase the safety of test operations as in the Alternative C.

Major Modifications: The latest stealth-design masts the US Navy has introduced into LPD-17 and to USS RADFORD are incorporated. The forward mast is identical to the one placed on USS RADFORD and encloses the SPS-49, SPS-73, the FURUNO navigational radar, and the communications antennas. The aft mast is similar to the one to be used in LPD-17 and encloses the SPS-48 and SPQ-9B. The Mk-95 directors are located aft over the hangar. The first director is immediately aft of the aft engineroom stack (as in the previous version) and the other on a new structure located to port of the aft stack and positioned higher to achieve a field of view of almost 270°.

For RCS reduction, new sloped side panels covered with RAM material are installed on all vertical bulkheads. To facilitate this, the outer portions of the helicopter hangar are removed, the bridge wings are minimized, and the forward windbreaks are removed. On the superstructure, where RAM covered panels were used in the previous versions on vertical bulkheads, extensions are added to support slopped sides that bring the sides of the superstructure to the deck edge producing the desired reduced cross section. To further reduce RCS, every trihedral and dihedral is eliminated either by adding RAM covered panels or by removing objects or protrusions.

This is the only version that incorporates a reduction in the IR signature. This is accomplished by installing new advanced stacks that are currently in development. The

advanced stacks are also designed to reduce the RCS. The exhaust plenum of the Number 3 Gas Turbine Generator on the missile deck is similarly redesigned for this version.

Advantages: The advantages for this version come from the innovations used for the first time all in one version. They give the best emplacement for the SSDS components while keeping near 270° coverage.

The reduced IR signature that is achieved in this version allows the expansion of SSDS tests to include IR-guided ASCMs, as well as the testing of improved low-IR emission stack designs in the future. The superstructure includes many newly designed attributes that make SWTS an attractive platform for agencies that want to test innovative counter-measures technologies.

This version has the lowest RCS of all, but it still falls short for the objective proposed by the ORD. The substantial size of the SPRUANCE class makes any further reduction on the RCS extremely expensive because it will involve the reconstruction of the whole superstructure and hull.

The advantages from the barge ramp, the forward flight deck, and the space available for future installations combine to increase the flexibility of operations and improve safety for the test personnel.

Disadvantages: The cost of conversion for this version is significantly larger than the other three versions due to the substantial modifications of the superstructure and the fitting of new masts which must be customized for SWTS. The RCS reducing components also increase the total weight of the platform.

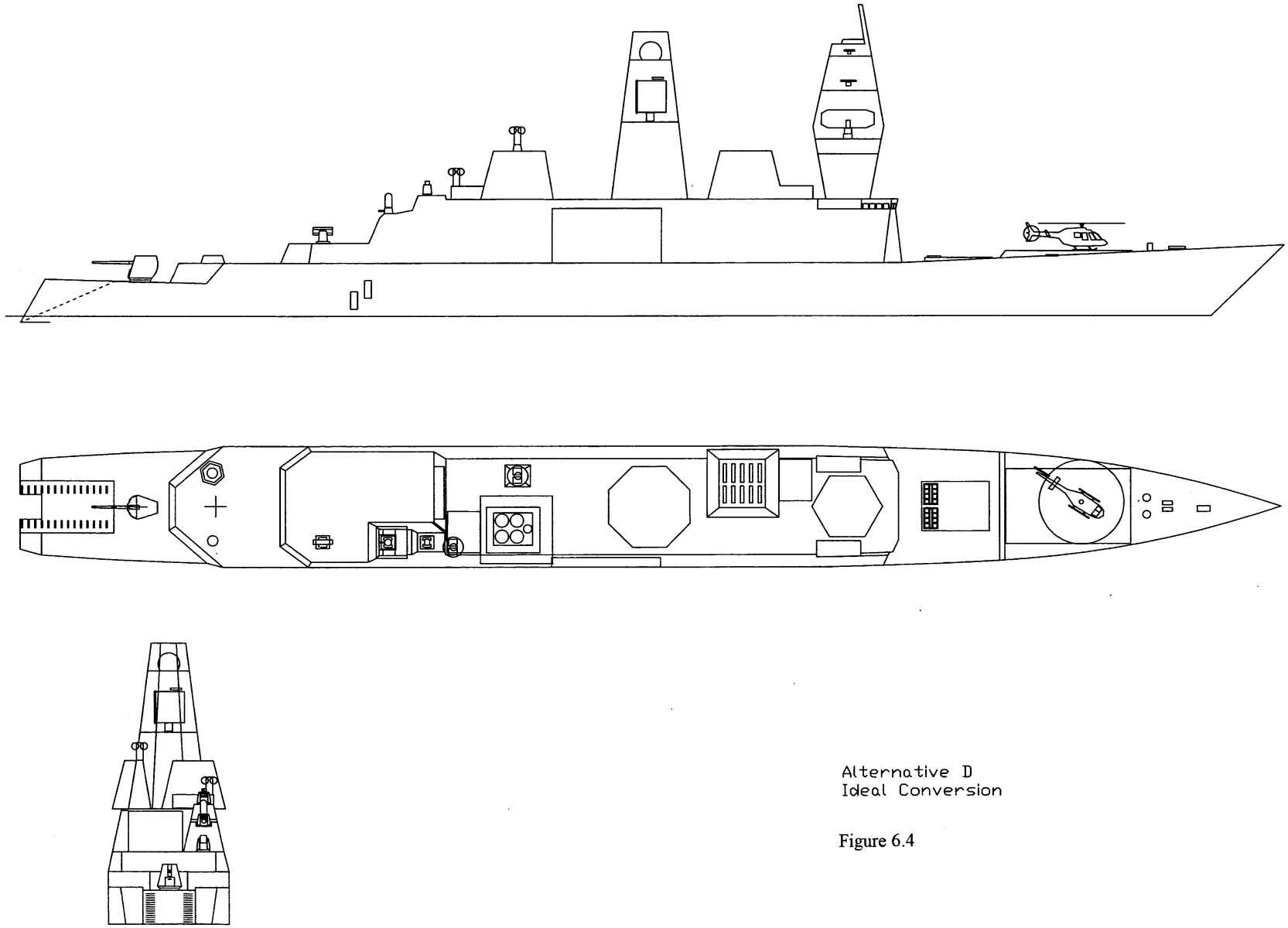

Alternative D
Ideal Conversion

Figure 6.4

6.6 Radar Cross Section Comparison

The current test threat missiles have active seekers. The geometry of each test is set so the target missile will acquire the test barge and not the SWTS; however, if the RCS of SWTS is significantly larger than the test barge, it may present a more attractive target to the seeker. While the target missiles do not carry warheads, they are still capable of significant damage to the ship. This damage would cost significant money and time to repair. A small RCS is a high design priority. The RCS of each alternative must be computed and compared to determine the most desirable alternative.

The RCS is affected by modifications to the superstructure including addition, removal and rearrangement of weapons and sensors, and modifications to the hull. Many of these modifications are done specifically to reduce the RCS; others are designed to have a small impact on the RCS. All of the test threat missiles use X band emitters, so all of the impacts are considered for this narrow band of frequencies.

The RCS is quantified by determining the RCS of the ex-Decatur and USS O'BRIEN by estimating the contributions of the hull, superstructure, sensors, masts, and weapons. These are demonstrated in Section 8. The contribution of each modification to USS O'BRIEN is calculated and summed in a table for each alternative. These tables are listed in Appendix H.

The results of the calculations are shown in Figure 6- 4. The ORD defines the RCS threshold as 100% of ex-Decatur. The objective is to reduce the RCS to 10% of ex-Decatur. Alternative A fails to meet the RCS threshold. Alternatives B, C, and D all meet the threshold but fall short of the objective.

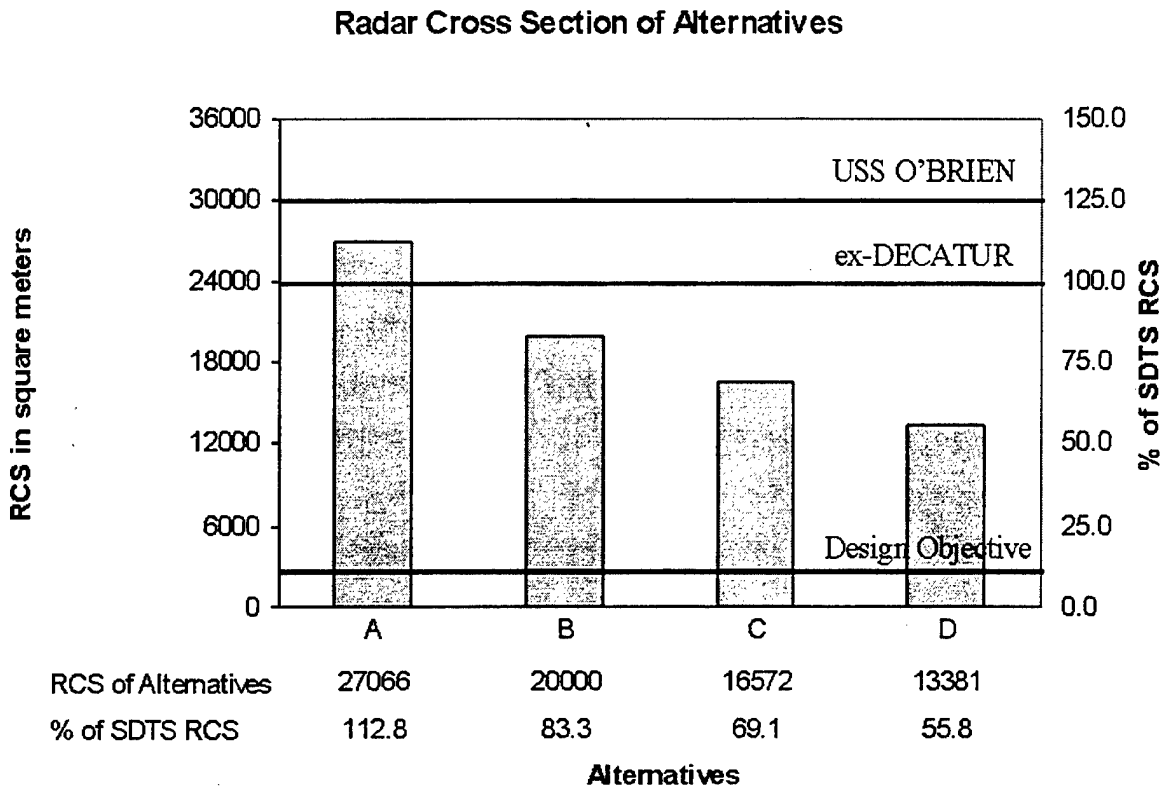

Figure 6- 4: RCS of the Alternative Versions.

6.7 Field of View Comparison

An initial field of view (FOV) study determines problem areas for each of the alternatives. An unobstructed field of view is defined as a clear field of view from 090°R to 270°R, ability to elevate from horizontal to 75°, and depress to an angle to reach sensor/weapon minimum range. In the case of the camera mount, minimum range is identified as the target barge. The systems included in this study are RAM, CIWS, CIWS Camera Mount, NATO Sea Sparrow Director (NSSM) (Mk-95) #1, NSSM Director (Mk-95) #2, SPS-48E, SPS-49A and SPQ-9B. A summary of results is located in Table 6- 1.

Conflicts were identified in alternatives A and B. The problem areas in alternative A occur with the CIWS mount and the NSSM director #1. The position of CIWS is on the port side of the O-4 level aft. The aft engine room stacks block the starboard view. The position of the NSSM director #1 is on a platform on the port side of the forward mast. The mast itself blocks

its starboard view. Alternative B's conflict occurs at the camera mount. The camera is located on a platform raised 5 feet up from the O-1 level on the missile launcher deck. The RAM launcher obscures a few degrees of the entire view. What makes those few degrees critical is that a portion of the target barge is obscured which may inhibit the view of a critical moment of the test. Both alternatives C and D have a clear field of view for all systems.

Sensor	FOV	Alt. A	Alt. B	Alt. C	Alt. D
RAM	Depress to Min Range	Y	Y	Y	Y
	Elevate 75	Y	Y	Y	Y
	090R to 270R	Y	Y	Y	Y
CIWS	Depress to Min Range	Y	Y	Y	Y
	Elevate 75	Y	Y	Y	Y
	090R to 270R	**NO**	Y	Y	Y
Camera	Depress to Min Range	Y	**NO**	Y	Y
	Elevate 75	Y	Y	Y	Y
	090R to 270R	Y	**NO**	Y	Y
Mk 91 #1	Depress to Min Range	Y	Y	Y	Y
	Elevate 75	Y	Y	Y	Y
	090R to 270R	**NO**	Y	Y	Y
Mk 91 #2	Depress to Min Range	Y	Y	Y	Y
	Elevate 75	Y	Y	Y	Y
	090R to 270R	Y	Y	Y	Y
SPS 48	Depress to Min Range	Y	Y	Y	Y
	Elevate 75	Y	Y	Y	Y
	090R to 270R	Y	Y	Y	Y
SPS 49	Depress to Min Range	Y	Y	Y	Y
	Elevate 75	Y	Y	Y	Y
	090R to 270R	Y	Y	Y	Y
SPQ 9	Depress to Min Range	Y	Y	Y	Y
	Elevate 75	Y	Y	Y	Y
	090R to 270R	Y	Y	Y	Y

Table 6- 1: Field of View Comparison.

6.8 Conclusion of Analysis of Alternatives

The Radar Cross Section, Fields of View, and method of personnel transfer are the most significant differences among the alternatives. Alternatives C and D have the same FOV and personnel transfer methods. The RCS of Alternative D is approximately 25% lower than Alternative C's RCS due to extensive structural modifications to the superstructure and mast structures. These modifications would be expensive. Alternative C possesses the same FOV and safe personnel transfer method with a RCS that is in the middle of the acceptable RCS band. This performance is at a significantly lower cost than Alternative D. Alternative C is therefore selected as the basis for the detail design. Section 16 presents four optional modifications to the baseline Alternative C that can reduce radar cross section, or reduce cost by reverting to standard personnel transfer and barge towing practices.

Chapter 7: *Combat Systems Design.*

The SWTS is designed to provide a robust platform to test new weapons and sensors. The first system to be tested will be the SSDS Mk 2. This system includes SPQ-9B, SPS-48E, SPS-73, SLQ-32A V(2), RAM Block 1, RNSSMS, and ACDS. In addition to SSDS, the initial combat systems payload includes an SPS-49A, CIWS Block 1B and 5"/54 Mk 45 at PHD NSWC request.

Several systems are removed or laid up to reduce maintenance requirements and provide space for new systems. The SQR-19 (Towed Array Sonar) and SLQ-25 (NIXIE) are removed so the barge ramp can be installed. The Mk 32 Mod 14 Torpedo mounts are removed to allow space for the Enclosed Accommodation Ladder and to reduce maintenance. The SPS-55 is removed to eliminate RCS contributions to the mast. The forward 5"/54 Mk 45 LWG is removed to provide space for the new flight deck. The Mk 29 NSSM launcher, forward CIWS mount and SPG-60 fire control director are removed to provide space for future systems. Forty-eight of the 64 Mk 41 VLS cells are laid up to reduce maintenance. The entire Sonar system is not required and is laid up.

7.1 Payload External Arrangements

The external arrangements are critical to providing the greatest coverage for all weapons and sensors. Figure 7-1 shows the profile of the entire SWTS. Geometric sections of the ship will be described individually.

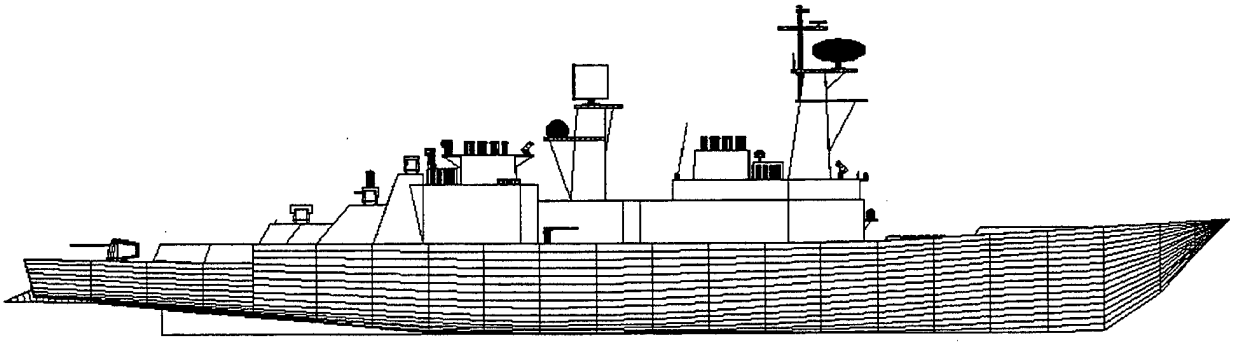

Figure 7- 1: Surface Warfare Test Ship Profile.

7.1.1 Sensors

The AN/SPS-49A is a long-range 2-D air search radar. It is designed for primary detection and tracking out to 250 nm.

Parameters:

- Requires 86 kVA of 440 Hz power and 10.1 kVA of 115 volt power.
- UHF band (300 to 1000 MHz)
- Antenna dimensions: 288 x 171 in (including pedestal)
- Antenna weight: 3165 lbs (above deck), 14,000 lbs (below deck)

The SPS-49A is located on the second platform of the forward mast (Figure 7-2) at frame 150. It is 104 ft above the waterline.

The AN/SPS-73 is the primary navigation radar. This radar replaces the SPS-55, and is integrated into SSDS Mk 2. The SPS-73 is located on the third platform of the forward mast at frame 159. It is 124 ft above the waterline.

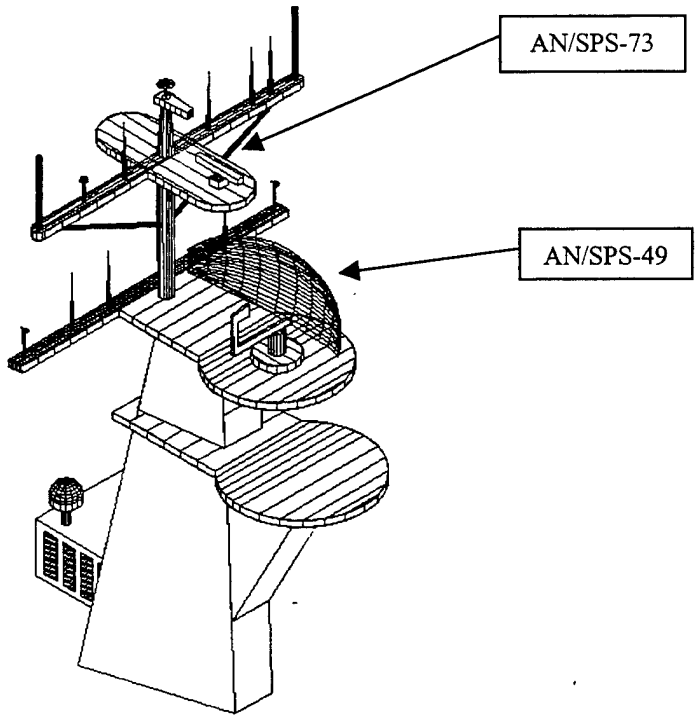

Figure 7- 2: Foremast.

The AN/SPS-48E is a long-range 3-D air search radar designed to provide plan position and height information on air targets out to 220 nm. It uses a combination of mechanical scanning and electronic beam steering to determine the targets position.

Parameters:

- Requires 112 kVA 440 Hz power
- E/F band (2 to 3 GHz)
- Antenna Dimensions: 194 x 228 in (including pedestal)
- Antenna weight: 5684 lbs (above deck), 24,018 (below deck)

The aft mast (Figure 7-3) is modified to support the SPS-48E. All the mast structure above the second platform is removed to make space for the radar. The SPS-48E is located on the second platform of the aft mast at frame 268, 88 ft above the waterline.

The SPQ-9B is a track-while-scan surface search and low altitude air search radar. Its primary use is target acquisition for SSDS Mk-2 and has a range of 20 nm and maximum ceiling of 2000 ft.

Parameters:

- X band
- Antenna Dimensions: 54.5 x 70.825 in (radome 120 x 96 in)
- Antenna weight: 1185 lbs (including radome)

The SPQ-9A was originally installed on the first platform of the forward mast of the O'BRIEN. The upgraded antenna is relocated to the first platform of the aft mast at frame 282. It is 73 ft above the waterline.

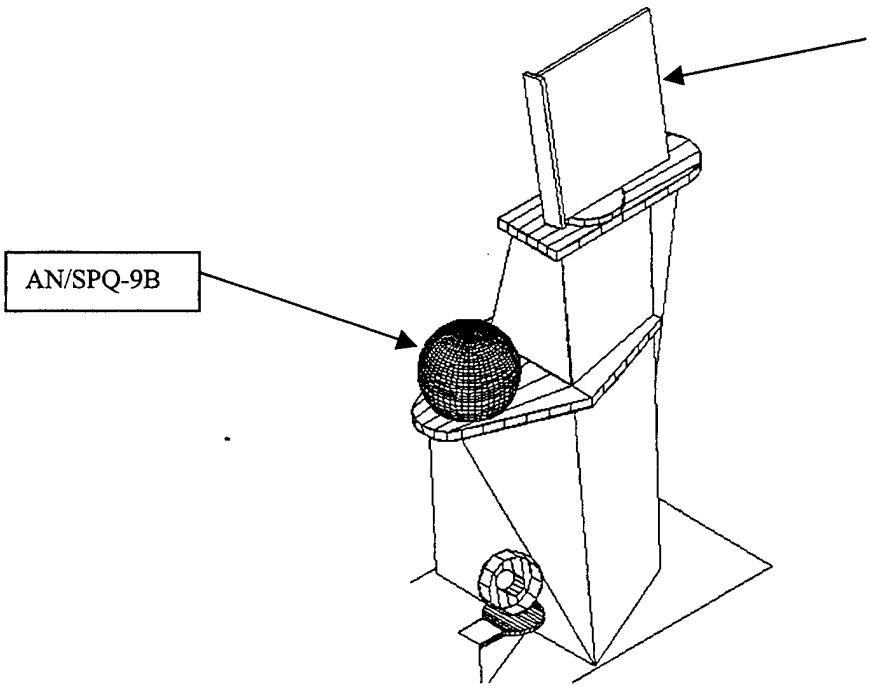

Figure 7- 3: Aft Mast.

A camera system mounted on a CIWS base is a SWTS unique item. This camera system has the same footprint as a CIWS mount; however, instead of a gun it accommodates several Infrared and visual cameras. This camera mount is boresighted to the CIWS Blk 1B so that it can follow incoming targets and record test data. The camera is mounted on a specially designed platform/enclosure on the flight deck. The camera mount will be removed from the SDTS and installed on the SWTS. The camera is located at frame 349 and is 62 ft above the waterline.

The platform that houses the CIWS and camera mount is a two-tiered version of a CIWS maintenance enclosure (Figure 7-4). The design uses sloped paneling to minimize the RCS contributions. The enclosure houses the two bases, providing an enclosed area to conduct maintenance. The platforms are on the starboard side of the former flight deck. The first tier is 23 ft above the deck and the second tier is 8 ft above the deck. Access to the enclosure is provided by a door in the forward portion of the platform, which opens to the starboard helicopter hangar.

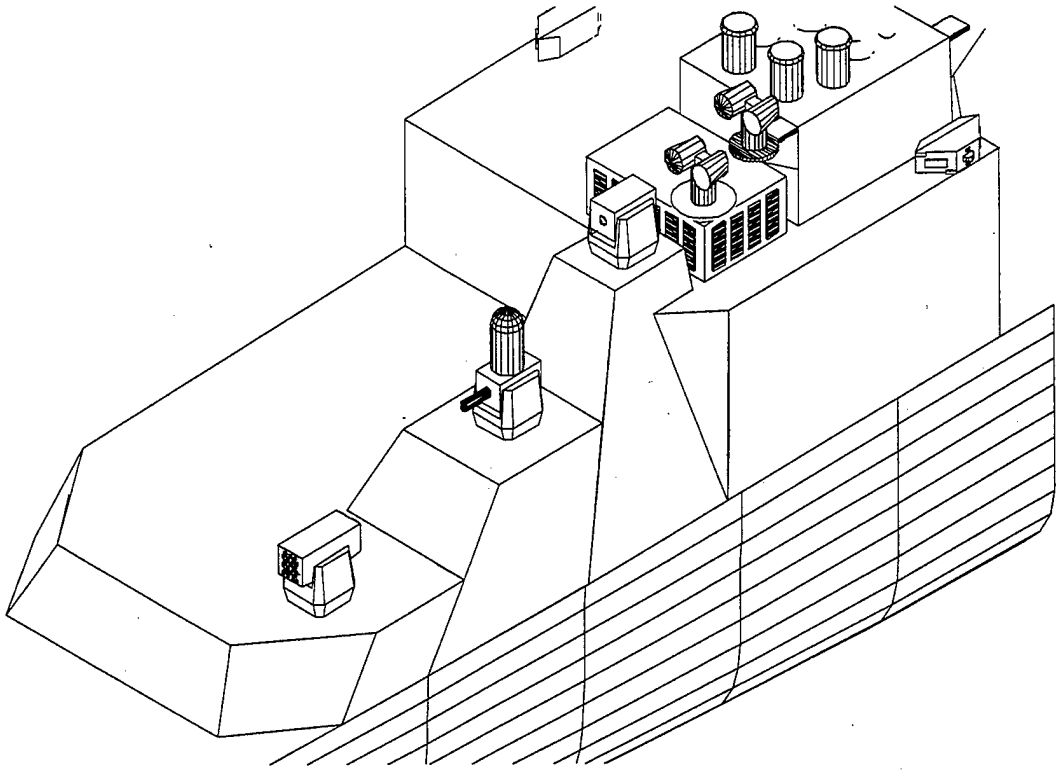

Figure 7- 4: Aft Weapons Platform on the Former Flight Deck.

The SLQ-32A (V)2 is the electronics warfare suite for SSDS. This system replaces the existing SLQ-32 (V)2 already installed on the USS O'BRIEN. The SLQ-32A is a new version that takes advantage of advances in architectural and processing technology. The antennas are located at frame 317 (port) and frame 302 (starboard), on the 04 level, 51 ft above the waterline.

7.1.2 Weapon Systems

The Rolling Airframe Missile (RAM) Block 1 is a lightweight, quick-reaction anti-ship missile system for close in defense. The system consists of the RIM-166A missile, the Mk 49 launcher, and a control panel. The missile is fire-and-forget and has two tracking modes: RF and IR. To assign a launcher, SSDS will pull track data from its sensors (SPS-48E and SPQ-9B) and provide the RAM system with a launch bearing. Once the track data is input to the system, the missile is fired and engages the target.

Parameters:

- Launcher dimensions: 9.8ft long x 4.9ft high x 3 ft wide

- System weight: 6LT (above deck), 2060 lbs (below deck)
- Arc of fire: 360° (limited by ship structure)
- Elevation: -25° to +80°
- Range: 5.17 nm

The Mk 49 launcher will be transferred from the SDTS and installed on the starboard edge of the aft flight deck, astern of the CIWS platform. Its location is at frame 400 and is 40 ft above the waterline.

CIWS Block 1B is the next generation of the Phalanx. The system is modified in several respects to integrate the system with SSDS and AEGIS. A surface engagement capability is added. A tunable, narrow-band filter is added to the search radar and a high-definition thermal imaging system is installed with an electro-optic video tracker.

Parameters:

- System weight: 12,000 lbs (above deck), 466 lbs (below deck)
- Arc of fire: 360° (limited by ship structure)
- Elevation: -25° to +80°
- Range: 6000 yds

The CIWS mounts 21 and 22 on the O'BRIEN are removed and the CIWS from the SDTS is transferred. The new mount is installed on the lower tier of the flight deck weapons platform at frame 368, 48 ft above the waterline.

The Mk 45 5"/54 is a single barrel automatic multi-purpose gun. On the SPRUANCE class, this mount is used for air and surface engagements as well as fire support for forces ashore. The USS O'BRIEN has two mounts; one on the forecastle and the other on the fantail. The forward mount was removed to make space for the flight deck and the aft gun mount was retained for future munitions testing and surface fire missions.

The SPRUANCE class has 64 Mk 41 VLS B/L III cells used for Tomahawks. In the future, the Evolved NATO Sea Sparrow Missile (ESSM) will be added to that inventory. The SWTS will be used to test self-defense weapons; so it will not require the capability to launch Standard Missile or Tomahawk. The SWTS does not require all 64 cells. Six of the 8 modules are laid up. The remaining 16 cells, System Module (A7) and Standard Module (A8) are converted to VLS B/L VII to fire ESSM. No changes are required for the ship services provided to VLS such as HVAC, electrical, water and air.

Evolved Seasparrow Missile (ESSM) is the next generation of self-defense missile system to be developed from the NATO Seasparrow Missile System. It uses a semi-active RF seeker with midcourse guidance. ESSM is designed to engage faster, lower, smaller and more maneuverable anti-ship cruise missiles. Improvements from the RIM-7M/P include higher speed (Mach 2.0), increased maneuverability (>30g), a new warhead, and a smaller radar cross section. One significant advantage is the extended range. ESSM triples the NSSM range to 24 nm, expanding the self-defense envelope of the ship. ESSM is packaged in quad-packs that are compatible with the Mk 41 VLS system.

The ESSM fire control system for SWTS is the Re-architectured NATO Seasparrow Missile System (RNSSMS). The RNSSMS is an upgrade to the standard NSSMS. It takes advantage of current technology by replacing the analog circuits with digital circuits and using fiber optics to connect each part of the system. The integration of ESSM with the RNSSMS is not completed and provisions will be required before ESSM can be tested from this platform.

7.1.3 Communications Suite

SWTS maintains three groups of antennas for the conduct of its test mission:

1) Voice and Data Communications: For normal underway operations and during periods of Battle Group Interoperability, SWTS mounts a reduced DD 963 comms suite that includes:
   a) 1 HF voice antenna
   b) 4 VHF line-of-sight voice antennas
   c) 2 UHF line-of-sight voice antennas
   d) INMARSAT satellite voice antenna
   e) UHF satellite voice and data antenna set
   f) UHF satellite broadcast receiver antenna set
   g) EHF satellite voice and data antenna (laid-up)
2) Data Links: Primarily employed to control SWTS during unmanned, remote operation at sea, the Ship Remote Control and Combat Systems Remote Control links are served by two antennas each for full azimuth coverage. This also includes the ship wide remote sensing system, TWARSES.
3) Navigation: Includes one SATNAV and two GPS satellite navigation receivers. The TACAN antenna for control of aircraft is also described.

Each antenna has the appropriate transceiver and antenna coupler retained. Most of these components are located in the Radio Transmitter Room on the 03 level.

Table 7-1 identifies the antenna groups with their designated locations aboard SWTS. The design endeavored to keep original DD 963 antennas in place to reduce conversion costs. Location changes are indicated in the table.

Figure 7-5 shows the antenna mounting arrangement for SWTS. Antenna numbers are cross-referenced to the table and maintain the original DD 963 antenna numbers except where indicated.

An EMI survey/analysis has not been conducted on this antenna arrangement, as discussed in Section 17.3.

ANT Note 1	NOMENCLATURE	DESIG	FREQ	DD-963 LOCATION	SWTS LOCATION
COMMUNICATIONS					
11-2	HF	NT-66047	2-30 MHz (T) 14-35MHz (R)	04 Level CL Fr 227	Same
2-7	UHF / VHF / IFF LINE-OF-SIGHT GROUP	AS-3020	225-400 MHz 30-76 MHz	Aft Mast Stbd Fr 271	Upper Yardarm Stbd Fr 168
2-8	UHF / VHF / IFF LINE-OF-SIGHT GROUP	AS-3020	225-400 MHz 30-76 MHz	Upper Yardarm Port Fr 168	Same
3-1	UHF SATCOM	AS-3018A WSC-1	240-318 MHz	Aft Corner Of Aft Stack	Fwd Corner Of Aft Stack
3-2	UHF SATCOM	AS-3018A WSC-1	240-318 MHz	04 Level Port Fr 151	Same
3-5	VHF	AS-2809	30-76 MHz	Upper Yardarm Port Fr 168	Same
9-6	VHF	NAW-300A	30-76 MHz	04 Level Port Fr 151	Same
3-8	INMARSAT	B16471-802	6 GHz (T) 1.5 GHz (R)	05 Level CL Fr 186	Same
12-1	UHF SATCOM BROADCAST RCVR	AS-2815 SSR-1	248-255 MHz	04 Level Port Fr 135	Same
12-3	UHF SATCOM BROADCAST RCVR	AS-2815 SSR-1	246-255 MHz	04 Level Stbd Fr 227	Same
3-9	EHF SATCOM *(In Lay-Up)*	AN/USC-38	44000 MHz(T) 20000MHz(R)	01 Level Stbd Fr 130	Same
DATA LINKS					
9-7a*	SHIP REMOTE CONTOL DATA-LINK	N/A	902-928 MHz	N/A	Lower Yardarm Stbd Fr 168
9-7b*	SHIP REMOTE CONTOL DATA-LINK	N/A	902-928 MHz	N/A	Lower Yardarm Port Fr 168
9-8a*	CS REMOTE CONTROL DATA-LINK	N/A		N/A	Upper Yardarm Stbd Fr 168
9-8b*	CS REMOTE CONTROL DATA-LINK	N/A		N/A	Upper Yardarm Port Fr 168
9-9*	TWARSES	N/A		N/A	Lower Yardarm Stbd Fr 168
NAVIGATION					
4-1	SATNAV	WRN-5	150 MHz 400 MHz	Upper Yardarm Port Fr 168	Same
4-3	GPS #1	AS-3819	1227 MHz 1575 MHz	Upper Yardarm Stbd Fr 168	Same
4-7*	GPS #2	NAV 6510	1227 MHz 1575 MHz	N/A	04 Level Stbd Fr 148
5-1	TACAN	URN-25	962-1024 (T) 1151-1213 (T) 1025-1150 (R) MHz	Aft Mast Top Fr 271	Fwd Mast Top Fr 168

Notes: 1) Antenna numbers are from DD 963 Table of Antennas, except for "*" numbers which are new antennas.

Table 7- 1: SWTS Communications Suite.

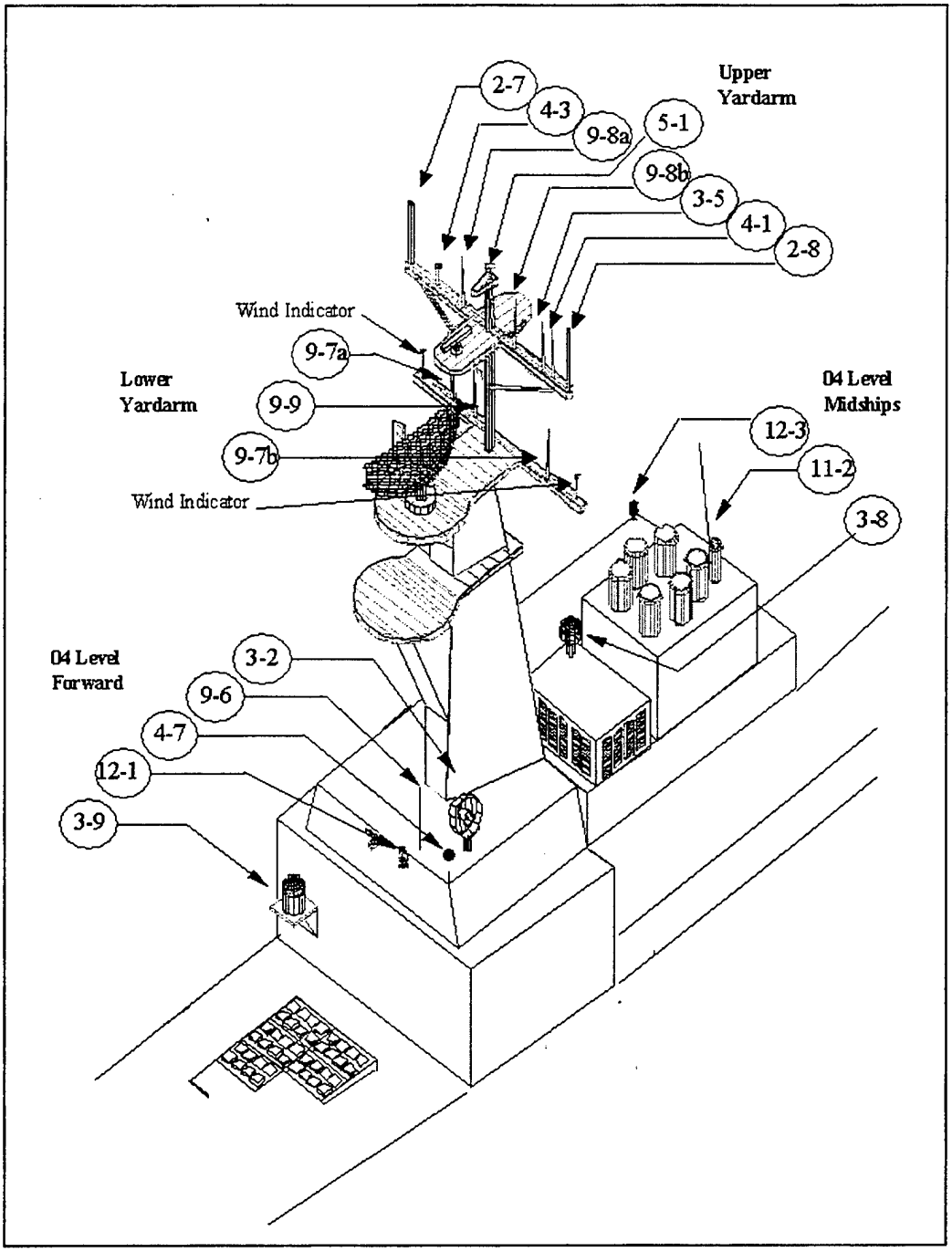

Figure 7- 5: Communications Antenna Plan.

7.1.4 Systems Not Accommodated

All systems required by the Operational Requirements Document (ORD) have been successfully accommodated. Two systems identified as possible future payloads, the High Energy Laser (HEL) and the Multi-Function Radar (MFR), may provide challenges in terms of electrical power and space accommodation, however, hard data is not available at this time.

7.1.5 Fields of View

A detailed study of the fields of view and firing arcs for each system shows that all systems are clear from beam to beam. The AUTOCAD solid model of the SWTS is ray traced to produce Field of View diagrams. Figure 7- 6 is a sample Mercator coverage diagram showing the blockage of equipment and structures. Appendix I contains Field of View Diagrams for all weapons and sensors.

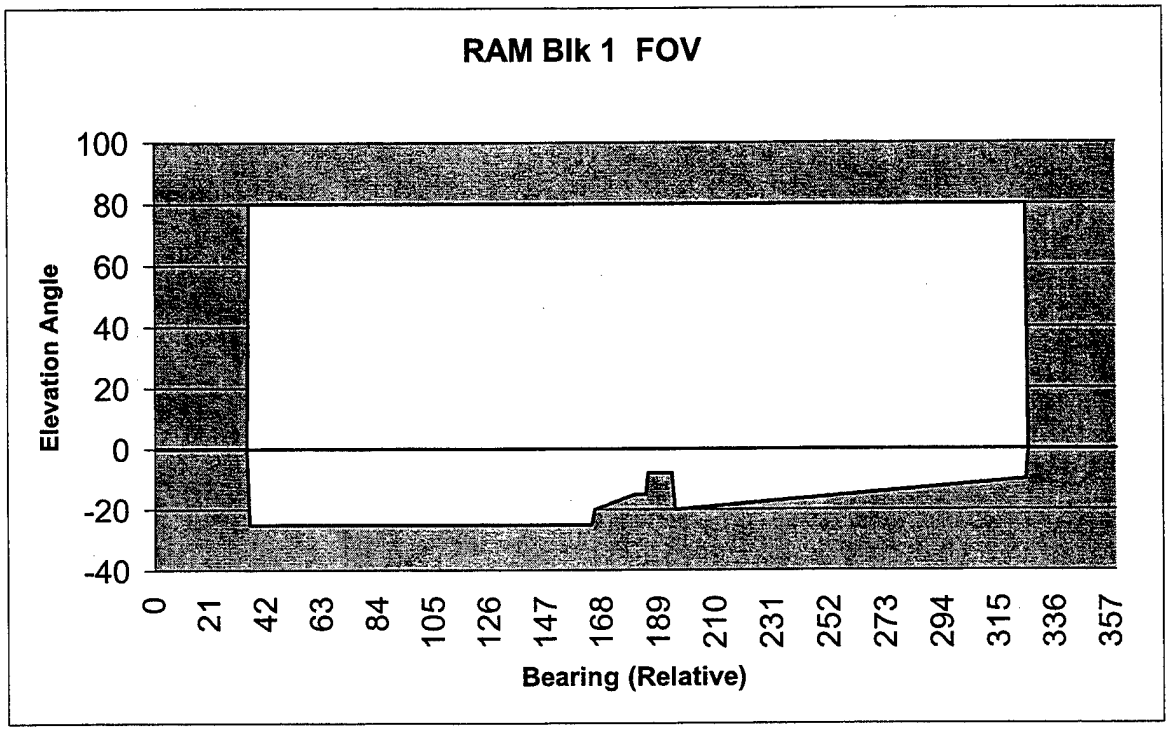

Figure 7- 6: Typical Field of View Diagram.

7.2 Internal Arrangements

A design philosophy for internal arrangement was set as follows:

a) Retain required-function spaces in an unmodified state to reduce conversion costs.
b) Spaces with a function no longer required with a large amount of equipment are laid-up and locked.
c) Spaces with a function no longer required with a small amount of equipment are stripped and identified as expansion spaces.
d) Similar function spaces are grouped together whenever possible.
e) Support equipment spaces are placed as near as possible to supported equipment.
f) Data Collection Rooms are placed throughout the ship to support testing of various systems and processes.
g) Personnel, stores, and equipment movement are minimized.
h) Laborsaving devices are retained where beneficial in supporting minimum manning.

7.2.1 Command and Control Spaces

The primary control space for ship operations, combat systems employment, and test coordination is the Combat Information Center (Section 7.3). Ship piloting, at-sea routine and helicopter control are conducted from the bridge (Section 7.4). Engineering and damage control are conducted from the Central Control Station (Section 9.2). Table 7-2 identifies SWTS command and control spaces:

Space	Compt Num.	Modifications (summary)	Former Function
CIC	02-139-0-C	Remove OJ consoles Lay-up TWCS, GFCS Add SSDS consoles Add Test Coord Area	Same
Bridge	03-140-0-C	Add TWARSES, SRCS Add Furuno radar display Lay-up OJ console Add 4 life rafts on wings	Same
Central Control Station	2-272-0-C	Add TWARSES Add SRCS	Same

Table 7- 2: Command and Control Spaces.

7.2.2 Combat System Sensor and Weapon Equipment Spaces

Large spaces no longer needed for the SWTS mission are converted to support the larger array of sensors to be fitted. The following table identifies SWTS sensor and weapon support spaces:

Space	Compt Num.	Modifications (summary)	Former Function
EW Cooling Equip Rm	04-292-2-Q	Add cooling equipment	TAS Fan Room
EW Local Control Equip Rm	04-292-1-Q	Add (V)3 capability	Same
Mk 91 NSSMS Director #2 Equip Rm	03-284-2-Q	Add equipment ESSM Mod	TAS Equip Room
Mk 91 NSSMS Director #1 Equip Rm	03-324-01-Q	ESSM Mod	Same
SPS-48E Radar Equip Rm #1	03-188-01-Q	Add equipment	Ship's classroom
SPS-48E Radar Equip Rm #2	03-212-0-Q	Add equipment	EW Workshop
Radar Room #1	03-154-02-Q	Remove SPG-60, SPS-55 equip Add SPQ-9B, Furuno equip	Same
CIWS and Camera Equip Rm	03-346-1-Q	New structure	N/A
Electronics Repair Shop	02-178-1-Q	N/A	Same
Message Processing Center	02-188-01-C	Remove unneeded radio equipment Add CSRCS Elect Rack Add Camera Control Elect Racks	Same
Radio Transmitter Rm	02-220-01-C	Remove unneeded radio equipment	Same
TACAN Equip Rm	02-220-4-Q	N/A	Same
SPS-49A Radar Equip Rm #1	02-247-0-Q	Remove SPS-40 equipment Add SPS-49A equipment	SPS-40 Radar Equip Room
SPS-49A Radar Equip Rm #2	02-260-0-Q	Remove stowage racks Add SPS-49A equipment	Aviation Storeroom
SPS-49A Cooling Equip Rm	02-267-2-Q	Add cooling equipment	Helo Det office
CIWS Magazine	02-281-2-M	N/A	Torpedo Magazine
Weapons Maintenance Rm	02-276-0-Q	N/A	Helo Repair Shop
RAM Maintenance Locker	02-346-1-Q	New structure	N/A
CIWS Maintenance Locker	02-366-1-Q	New structure	N/A
Data Processing Center	01-138-0-C	N/A	Same
Elect CW Equip Room	01-206-01-Q	N/A	Same
Main Magazine	01-398-0-M	N/A	NSSMS magazine
RAM Equipment Room	01-398-1-A w/ UNREP Sta	Remove UNREP station bulkhead Add RAM equipment	UNREP Gear Locker UNREP Station
Mk 41 VLS	1-94-0-Q	Lay-up 6 of 8 modules	Same
MK 41 Support Equip Rm	1-130-0-Q	N/A	Same
Gyro Room #1	2-128-0-Q	N/A	Same
IC/Gyro Room #1	3-128-0-Q	N/A	Same
IC/Gyro Room #2	3-382-0-Q	N/A	Same

Table 7- 3: Sensor/Weapon Support Spaces.

7.2.3 Test Support Spaces

Test support spaces directly contribute to the conduct and evaluation of any test performed by the SWTS. Primary control and coordination of tests is carried out in CIC. Data Collection Rooms (DCRs) are outfitted with work tables and chairs, ample electrical outlets, cable tubes to adjacent spaces, and atmospheric controls. These rooms will allow Navy and

industry technicians to effectively acquire test data without interfering with equipment or personnel processes. The layout of the Special Projects Space is described in Section 7.3. The following table identifies SWTS test support spaces:

Space	Compt Num	Modifications (summary)	Former Function
Data Collection Rm #1	03-291-0-C	Add DCR mods	Bosun Office
Data Collection Rm #2	02-174-1-C	Add DCR mods	CIC Admin
Test Control and Coordination Area (within CIC)	02-139-0-C	Add Test Director position Add Test Coord Console Add Camera Control Console	CIC
Special Projects Rm	02-139-2-C	See Section 7.3	Sonar Control
Data Collection Rm #3	01-178-1-Q	Add DCR mods	Elect Repair Shop
Conference Room	01-265-0-C	Add chairs Add display system Add computer work desks	Wardroom
Data Collection Rm #4	01-382-0-Q	Remove RAST equipment Add DCR mods	RAST Equipment Rm
Data Collection Rm #5	2-464-2-Q	Add DCR mods	Small Arms locker
Engineering Data Collection Rm	2-261-1-Q	Add DCR mods	Supply Office

Table 7- 4: Test Support Spaces.

7.2.4 Expansion Spaces

The voluminous hull and superstructure of the DD 963 design provides many expansion opportunities for future installations. The following spaces are no longer needed for the SWTS mission and are set aside for future use as equipment installation spaces, test support spaces, or ship support spaces to be determined at a future date:

Former Space Name	Compt Num	Description	Modifications (summary)
ECM Room	03-220-2-Q	10'x20' room	Lay up and lock
ASMD Launcher Spt Rm	03-292-1-A	8'x8' room	Strip
Decon Station	01-188-4-L	8'x6' space	N/A
UNREP Gear Locker	01-232-2-A	8'x8' storeroom	N/A
Fire Gear locker	01-228-4-A	3'x8' storeroom	N/A
Port side Quarterdeck	Fr264 – Fr 290	26'x10' weather deck area	N/A
NSSMS Launcher Control	01-393-2-C	20'x10' room	Lay up and lock
Missile Deck Area	Fr 426 – Fr 464	38'x20' weather deck area	N/A
Ship's Store	1-174-1-A	17'x16' room	Lay up and lock
CCC and CMC Offices	1-196-1-L	20'x12' room	N/A
PO1 lounge	1-204-1-L	15'x8' room	Strip
Port Torpedo Room	1-390-2-M	30'x15' space	Strip
GTG3 Waste Heat Boiler Rm	1-426-0-Q	15'x10' space	Lay up and lock
Special Clothing Strm	2-426-0-A	6'x24' storeroom	N/A
Bosun Strm #3	1-434-0-A	15'x24' storeroom	N/A
Launcher Equip Rm	1-440-2-A	6'x15' space	Strip
Inert Gas Strm #1	1-449-1-A	8'x19' storeroom	Strip
Hobby Shop	2-220-5-Q	8'x12' space	Lay up and lock

Laundry	2-382-0-Q	32'x24' space	Lay up and lock
Flam Liquid Strm #1	2-491-1-K	6'x6' storeroom	Lay up and lock
Storeroom	2-464-01-A	6'x15' storeroom	N/A
Physical Fitness Rm	2-436-0-G	28'x24' space	N/A
Armory	2-479-2-Q	15'x6' space	Lay up and lock
Storeroom	3-426-0-Q	28'x24' storeroom	N/A
CBR Strm	6-464-4-A	10'x10' storeroom	N/A
Landing Force Equip Strm	6-482-2-A	20'x10' storeroom	N/A

Table 7- 5: Expansion Spaces.

7.2.5 Ship Support Spaces

General ship support-type spaces are retained where needed to support the SWTS mission. The following table identifies retained ship support spaces:

Space Name	Compt Num	Modifications (summary)	Former Function
Quarter Deck	01-236-01-L	N/A	Same
Rider Lounge	01-270-0-L	N/A	Wardroom lounge
Windlass Room	1-0-0-E	N/A	Same
Combat Systems Office	1-138-1-Q	N/A	Weapons Dept Office
Test Directors Office	1-138-2-Q	N/A	Ships Office
Ships Admin Office	1-154-1-Q	N/A	Dispersing Office
Deck Dept Office	1-162-1-Q	N/A	Operations Dept Office
Tech Library	1-159-0-Q	N/A	Same
Crew lounge	1-248-1-L 1-260-1-L	N/A	CPO Lounge CPO Mess
Medical treatment Room	1-382-0-L	N/A	Same
Sickbay	1-398-0-L	N/A	Same
Medical Strm	1-406-0-A	N/A	Same
Stewards Linen Locker	1-412-0-Q	Remove barber equipment	Barber shop
Laundry	1-390-1-M	Remove torpedo gear Add commercial washers/dryers Add folding tables Add ironing equipment	Stbd Torpedo Room
Enclosed Accommodation Ladder	1-382-3-Q 2-382-5-A 3-382-1-Q	See Section 11.2	Fan room Store room Filter Cleaning shop
Paint Mix and Issue	1-457-0-K	N/A	Same
Inert gas Storeroom	1-460-1-A	N/A	Same
Rider Office Complex	2-149-0-L	Remove racks and lockers Add 18 desks and lockers	Crew Berthing
Engineering Dept Office	2-260-0-Q	N/A	Same
Machine and welding Shop	2-387-01-Q	N/A	Same
Hull Workshop	2-414-0-Q	N/A	Same
Tool Issue	2-394-2-Q	N/A	Same
Electrical Work shop	2-404-2-Q	N/A	Same
Flam Liquids Strm #1	2-491-1-Q	N/A	Same
Line Locker	2-506-3-A	N/A	Same
Line Locker	2-506-2-Q	Remove bathy equipment Add mooring line reels	Bathy Equip Room

Supply Office	3-283-0-Q	N/A	Supply Support Center
Supply Storeroom #1	3-260-01-A	N/A	Same
Supply Storeroom #2	3-283-2-A	N/A	Same
Engineering Storeroom	3-382-2-A	N/A	Supply Dept storeroom
Mooring Line Storeroom	6-488-1-A	N/A	Same

Table 7- 6: Ship Support Spaces.

7.2.6 Spaces Placed in Lay-Up

Spaces not needed to support the SWTS mission are placed in lay-up and secured (locked). The following table identifies spaces placed in lay-up:

Space Name	Compt Number
Signal Shack	04-162-0-C
Landing Control Station	03-332-2-Q
RAST tracks	Former flight deck
Wardroom Pantry	01-260-0-L
Sonar Equipment Room #1	1-28-01-Q
MT 51 Loader Drum Room	1-58-01-M
Elevator Machinery Room	1-82-1-Q
Decon Station #1	1-434-2-L
Fwd Ammo Elevator	3-82-0-T
Torpedo Elevator	Fr 418
Aft Ammo Elevator	3-464-0-T
Sonar Equipment Room #2	2-28-01-Q
Fwd Ammo Pallet Staging	2-58-01-Q
Entertainment Equipment Rm	2-236-1-A
Main Engine Room #2	5-300-0-E
Trash Compactor Room	2-382-4-Q
Aft Ammo Pallet Staging	2-464-01-A
MT 52 Loader Drum Room	2-482-0-M
Sonar Equipment Room #3	3-28-01-Q
MT 51 Projectile Magazine	3-62-01-M
MT 51 Powder Magazine	3-76-1-M 3-76-2-M
Crew Berthing	3-146-0-L
Dry Cleaning Plant	3-394-1-Q
Small Arms Magazine	3-437-2-M
Aft Ammo Pallet Staging	3-464-01-Q
CPRSR Room	6-464-3-Q
Flam Liquids Strm #2	3-476-1-K
MT 52 Projectile Magazine	3-482-0-M
MT 52 Powder Magazine	3-494-0-M

Table 7- 7: Spaces Placed in Lay-Up.

7.3 CIC Layout

The SWTS Combat Information Center is the nerve center for sensor and weapon employment and test control. Figure 7-7 lays out of the new SWTS CIC. Initially, the primary system to be tested is the SSDS Mk2. The SSDS console in development, with positions for the TAO and two operators, is fitted in front of two rear-projection large screen displays (LSDs). Behind the SSDS console is the test control group consisting of the test director's position, a comms console for two test control/coordination personnel and the remote camera control console. Other changes to the original O'BRIEN CIC include:

a) Addition of CIWS Block 1B console.
b) Rearchitectured NSSMS consoles (from ex-DECATUR).
c) Removal of several operations consoles including the MT 51 gun console. MT 52 Console and Gun Control Console (GCC) are laid-up.
d) Lay-up of the Tomahawk Weapon Control System.
e) Lay-up of one of four OJ-type tracker consoles.
f) CIC Admin is converted to Data Collection Room #2 to support monitoring/testing of equipment and events in CIC.

Special Projects Room: This space will support high-level classified tests and data acquisition. To support this mission, a SCIF-type space is arranged with the necessary security features, including a vault. Optimally located adjacent to CIC, the former Sonar Control space is stripped of all console and sonar related equipment. Room for Special Project equipment is provided to port and a table for workstations is provided to starboard. A classified planning/briefing table is included. This space is an extended form of the Data Collection Rooms found through out the SWTS.

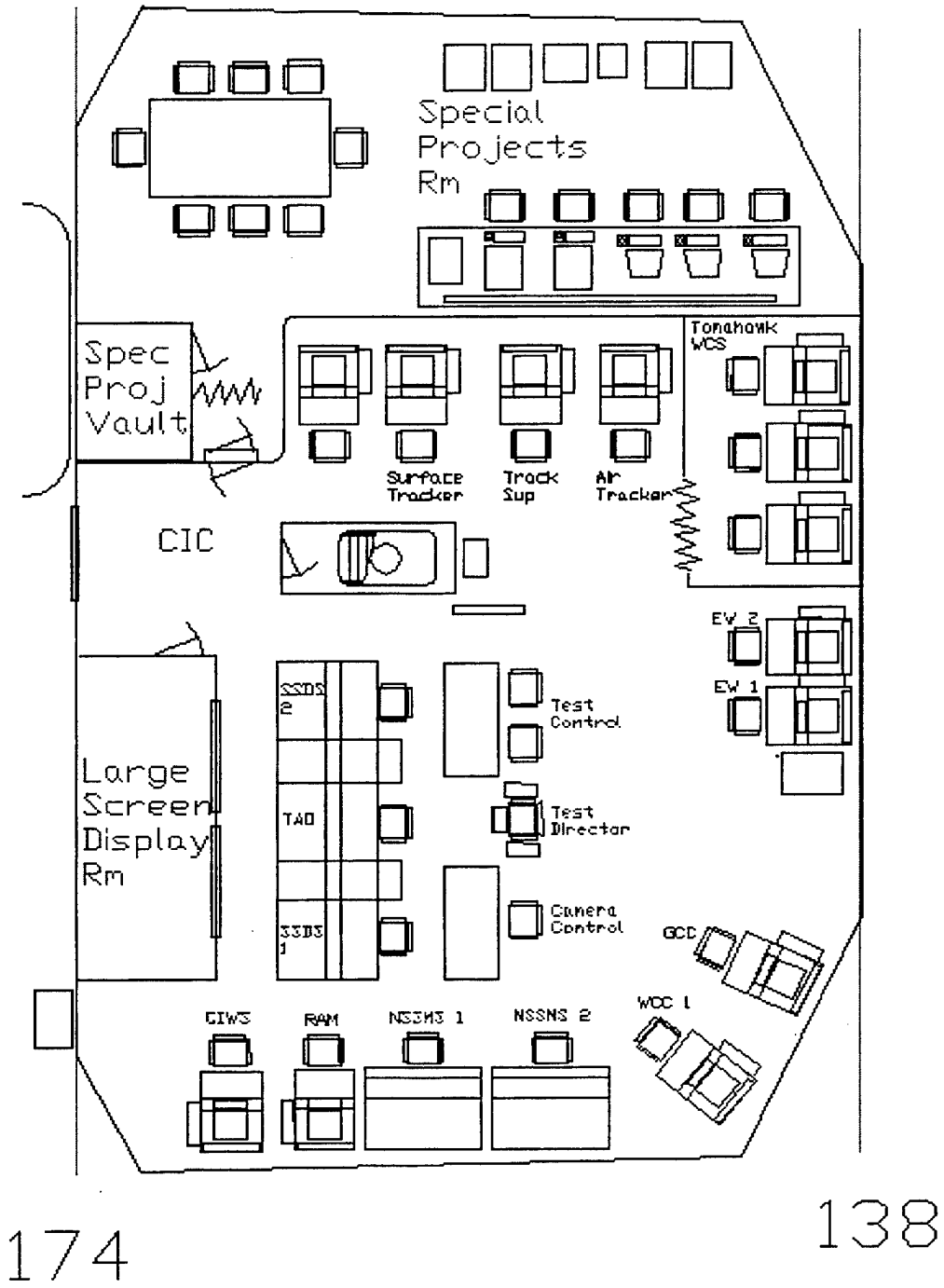

Figure 7- 7: Combat Information Center Layout.

7.4 Bridge Layout

The majority of the SWTS bridge layout and equipment is retained with the following additions:

a) The Ship Remote Control Console is added at the aft bulkhead.

b) The TWARSES Monitoring Panel is mounted on the aft bulkhead.

c) A Furuno radar display console is added next to the chart table.

d) The OJ-194 console is laid-up.

e) The bridge wing bulkheads are extended completely around the wings for RCS reduction.

f) Two 30-person life rafts are mounted on each bridge wing.

g) Additional VHF comms for flight operations control are added.

h) Lighting control panel for helicopter deck is mounted on the aft bulkhead.

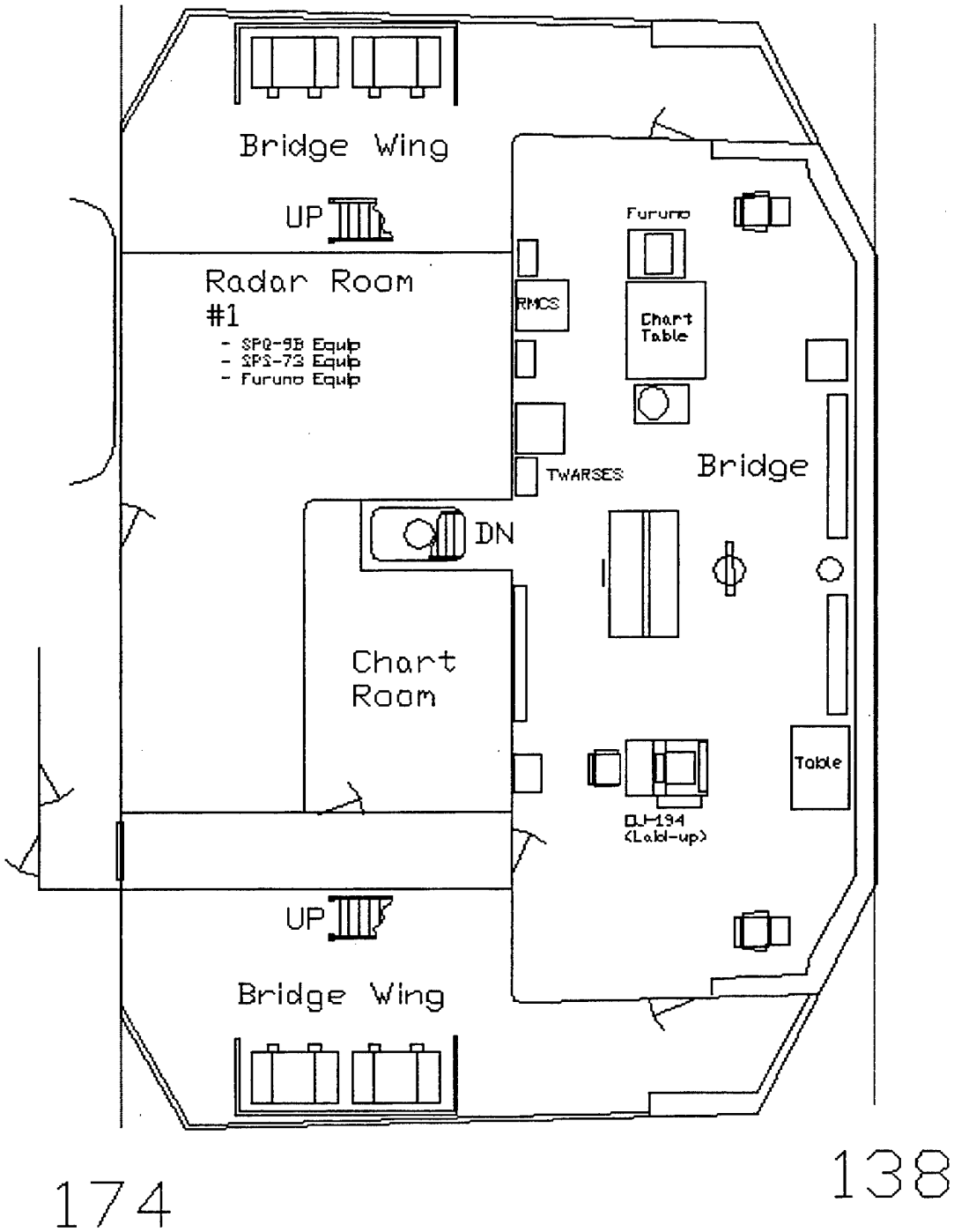

Figure 7- 8: Bridge Layout.

7.5 Ship's Remote Control System

During unmanned operations, two remote control systems control and monitor SWTS. The Combat Systems Remote Control System (CSRCS) controls the combat system weapons and sensors. The Ship's Remote Control System (SRCS) controls all remaining aspects of the ship. As described in Section 2.3, NAWC at NAS Point Mugu controls SWTS while the ship is on the range. The specific functions that must be controlled and monitored are navigation, damage control, and engineering. Two major evolutions occur while the SWTS is unmanned: flight operations for personnel transfer and the test event. The SRCS must provide control during these operations. The system also provides a "Kill Switch" designed to shut down the GTGs in the event of an emergency. The ship will go dead in the water. Remote monitoring can still be performed via TWARSES and SRCS.

The Surface Targets Division at NAWC installs and maintains the SRCS. The system presently in use on the SDTS is the analog Integrated Target Control System (ITCS). A workstation on the bridge controls the functions of the ship and interfaces with the operators via an RF data link. Controller Area Networks (CANs) integrate and control the ship's systems. Although the ITCS has not been installed on any system as complex as the O'BRIEN, the system is modular and can be scaled for use on the SWTS. It will be digital to allow testing on any range.

The installed ITCS network is shown in Figure 7.9. CAN's are shown as square boxes, receivers and transceivers are shown as octagons, antennae are shown as triangles (apex down), and the central workstation is shown as a heavy box in the center of the diagram. The first line shows the location by space and console. The following lines show the parameter that is controlled or monitored. A control function is denoted by "+" while a monitored parameter is denoted by "-"

The central workstation is a standard Industrial PC that is installed on the bridge as shown in Figure 7-8. The workstation has two way communications with Point Mugu via a digital RF data link. Three link options exist for the SWTS application. The most likely arrangement is two 4-foot whip antennas operating at 902 MHz.

The CAN nodes are 11"x4"x4". CAN's are installed on the following equipment:

- A CAN on the GPS receiver provides ship's position information.

- A CAN on the Ship's Control Console on the bridge provides course and speed information. It also controls the throttle settings and the rudder position.
- A CAN on the Anemometer provides wind direction and speed information crucial for flight operations.
- A CAN on the Firemain Control Panel on the Damage Control Console in CCS provides data on the firemain pressure and firepump discharge pressures.
- A CAN on the Electric Plant Control Console in CCS monitors the GTG loading and will provide a "Kill Switch" to secure electric power to the ship.
- In CCS, the Propulsion and Auxiliary Machinery Information System Equipment (PAMISE) is one component of the Propulsion and Auxiliaries Control Console (see Section 9). On the PAMISE, the Central Information System Equipment (CISE) houses three Signal Conditioning Equipment components (S/CE). These three S/CE convert sensory data from throughout the engineering plant into analog data, monitor for alarm conditions, and provide meter signals[1]. A CAN on each of the S/CE's taps these monitored signals and transmit the data to the ITCS workstation.
- A control element activates HALON and AFFF bilge sprinkling systems. Four HALON systems exist: MER1, MER2, AMR1, and AMR2. Six AFFF bilge sprinkling systems exist: MER1, MER2, AMR1, AMR2, 3GTG, and the JP-5 pump room. The systems are plunger activated. A total of ten control elements are required.

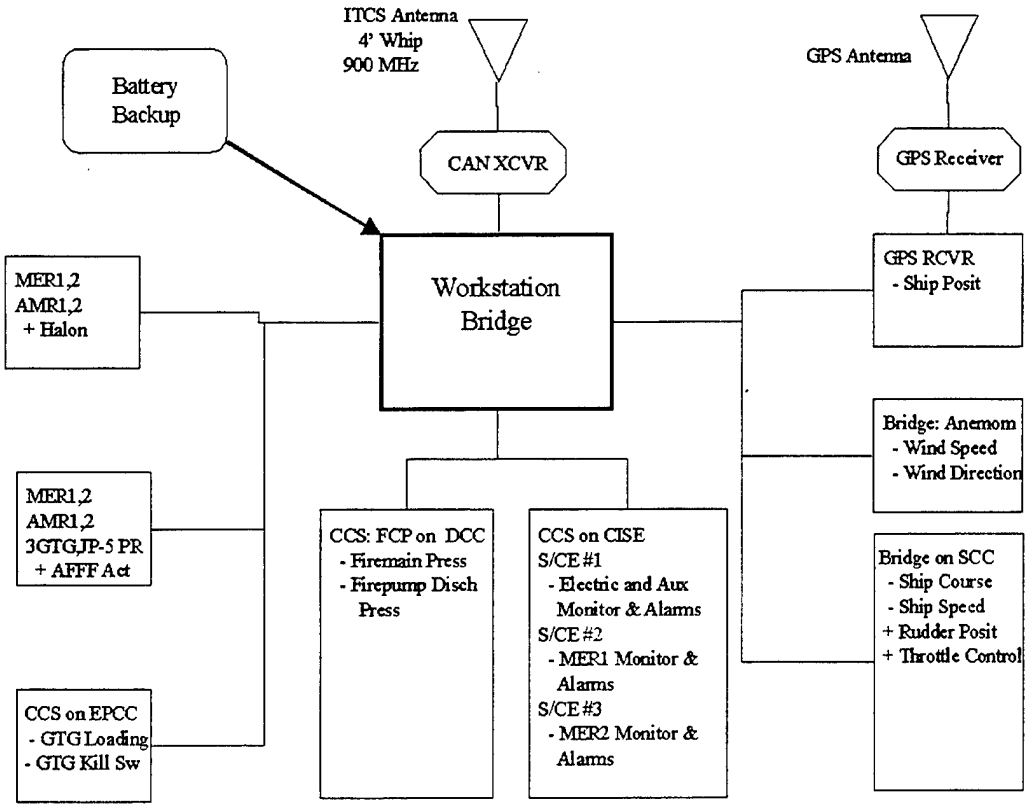

Figure 7- 9: Ships Remote Control System Internal Interfaces.

The CPU on the bridge records all of the data that SRCS receives in a digital "Session Log." Any of this data may be selected for transmission on the data link, but to maintain the speed of the SRCS datalink, most data is sent on request. Alarms and warning information are always sent as soon as SRCS receives the signal. Vital data such as ships position, course and speed, and rudder position are also continuously transmitted.

A battery backup for the remote control system is installed to provide four hours of uninterrupted power (ITCS UPS) for the workstation, GPS receiver, and ITCS Transceiver. Four hours provides ample time for emergency response personnel to arrive on the ship, conduct initial damage control, and restore the ship to manned operations. The Uninterrupted Power Supply in CCS provides power to the EPCC and PACC. These consoles can monitor and control the engineering spaces. TWARSES has a battery backup that continues to supply damage control information to the ITCS. The ITCS UPS enables the engineering plant, damage control, and ship's position information to the ship's controllers. This information will be crucial for the emergency response personnel.

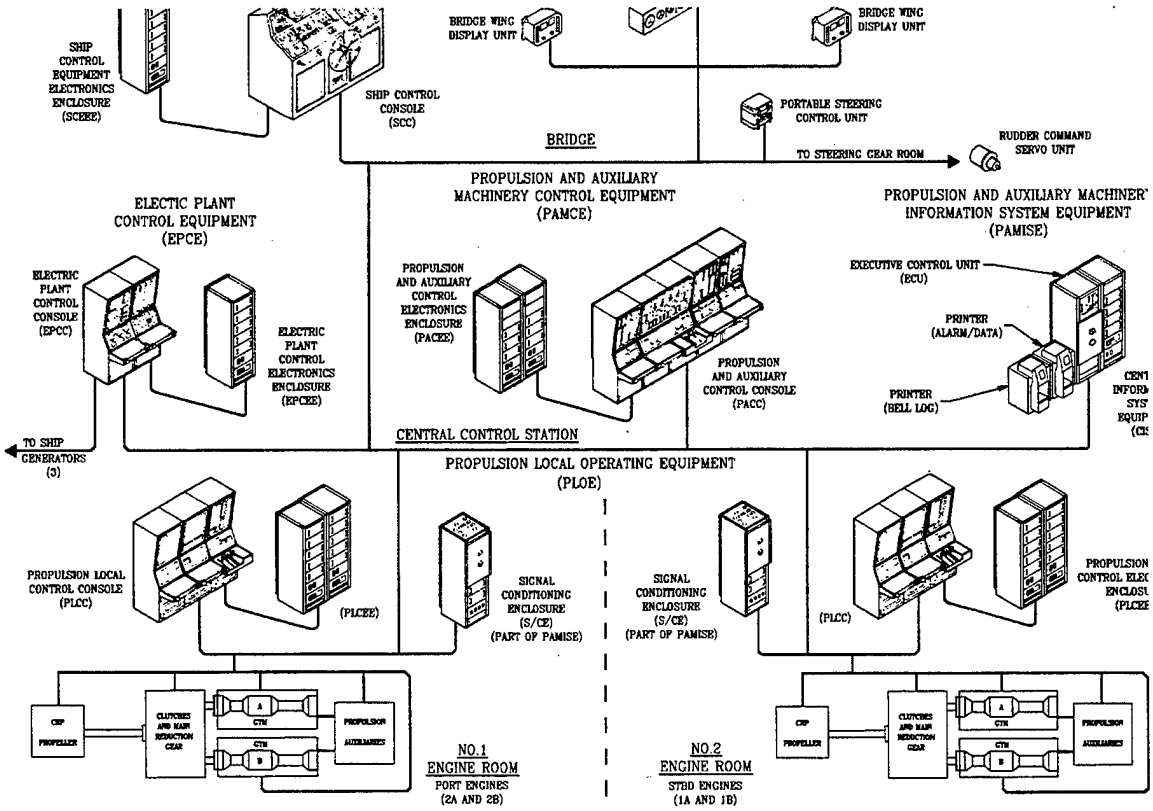

Figure 7- 10: Ship Control Equipment.

7.6 Combat Systems Remote Control System

SWTS remote live-fire testing is possible only using the Combat Systems Remote Control System (CSRCS). This digital data-link system allows control of sensors, weapons, and the Combat Direction System by personnel operating consoles from the safety of a shore-side facility.

The CSRCS electronics racks are located in the Message Processing Center, aft of CIC. The system is aligned for remote operation at a console located adjacent to the Test Control Station in CIC, in coordination with the Camera Control console operator.

Data-link connectivity is maintained by two dipole antennas located on the upper yardarm of the forward mast for 360-degree coverage. Transmission is received by the San Nicolas Island Control Relay and sent by fiber-optic cable through Pt Mugu to the SWTS remote CIC at Surface Weapons Engineering Facility (SWEF) (Figure 7- 11).

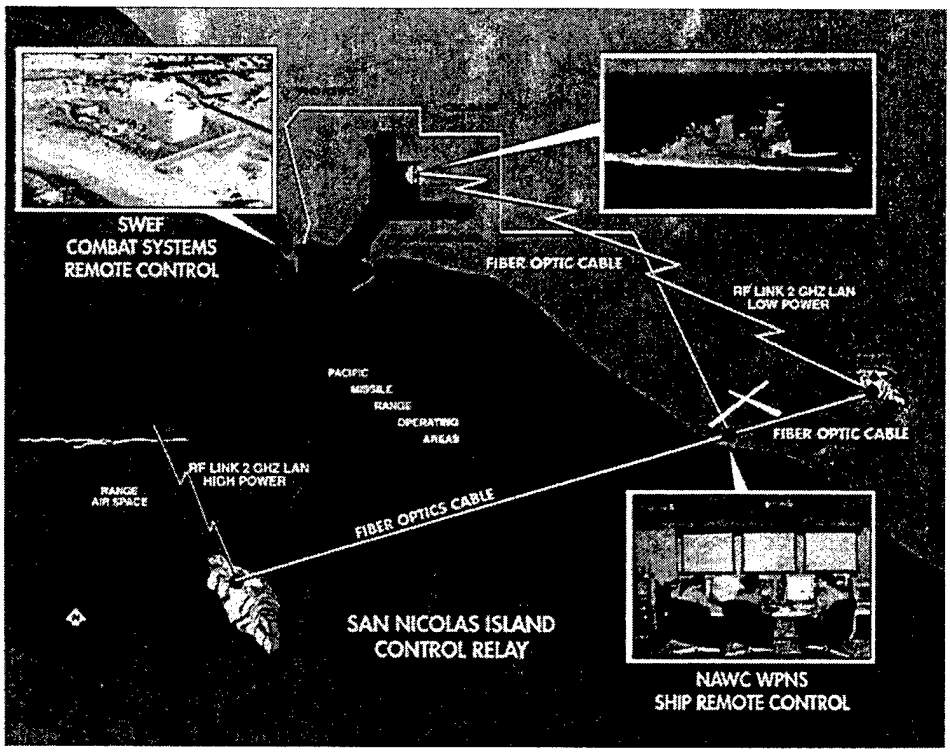

Figure 7- 11: Combat Systems Remote Control System.

7.7 Camera Plan

Cameras are an essential part of the data collection portion of any test. They are used to monitor control panels, weapon mounts and other systems and record test data. All the cameras are tied into a single network. The network is a part of the Combat Systems Remote Control System. Each shore operator is able to monitor the weapon to ensure it is aimed in the correct direction and operating properly.

7.7.1 Camera Locations

Cameras are located throughout the ship. One set is placed in the engineering plants during remote operation. These cameras augment the TWARSES for damage control and allow the shore team to monitor any unusual conditions that may arise in the engineering plant. An example of placements for these cameras is in CCS to monitor the ships control panels.

A second set of cameras monitors the combat systems. A camera is located at each local and remote combat system control panel. These cameras have a full view of the control panel so the shore operator is certain that his input is received and expected action takes place. The shore operator is able to quickly shift between views to verify that the local and remote panels agree.

The third set of cameras is located topside. Each weapon mount and weapon director has a camera aimed at it. These views allow the shore operators to verify that the weapon or director is aimed in the direction of the target.

The final set of cameras is used to collect external test data. Cameras are mounted topside to give a complete view of the aft portion of the ship and the target barge. These cameras provide the overall picture of the test from several different angles. One bank of cameras is trainable. They are referred to as the Camera mount. The Camera Mount is a CIWS Mount that has the gun and radar dome removed and a platform added that can accommodate multiple cameras. The platform movement is slaved to the motion of the CIWS. This gives a unique view of the test. The camera will be focused on the inbound missile and provide visual hit and subsequent target dynamics data to evaluate the test.

7.7.2 Camera Control

The Camera Control Console, located next to the Test Director's position in CIC, controls all combat systems-related cameras. Cameras are set up for remote operation and recording from this console. The actual camera electronics racks are located just aft of CIC in the Message Processing Center, adjacent to the Combat Systems Remote Control System.

7.8 Battle Group Interoperability

The SWTS retains the communications capability of a DD 963 class destroyer but with reduced redundancy (see Section 7.1.3). The communications suite gives the SWTS a Link 11 NTDS capability for operations in a Battle Group environment. UHF SATCOM voice, data and broadcast is retained while EHF SATCOM is placed in a laid-up status. Cooperative Engagement Capability (CEC) is not required for the mission of the SWTS; however, the space, weight and power required for basic CEC are available to support future installation.

7.9 Combat Systems Placed in Lay-up

Several of O'BRIEN's original combat systems have been placed in lay-up. These systems are available for activation if required by a test.

- Tomahawk Weapon Control System: TWCS has one Engagement Planner Console removed. The remaining EP console and two Launch Control Consoles are available for activation to test TWCS.
- SRBOC: This system could be activated as is or converted to NULKA for SSDS Mk 2 Mod 2 testing.
- SQS-53B: This system is intact except the Nixie and Towed Array are removed and the Sonar Consoles are removed. A local control console network would have to be provided.
- 5 inch Gun: The aft 5 inch gun remains with the Weapons Control Console and one Gun Control Console.
- Vertical Launch System: The remaining six modules with 45 cells and the crane are available for reactivation.

- RAST: The Recovery, Assist, Secure and Traverse system remains and could be used to transport classified systems (Directed Energy) to and from the hangar during tests to keep the system out of sight.

[1] DD963 Propulsion Plant Manual.

Chapter 8: *Radar Cross Section*

The Radar Cross Section is the most studied characteristic of the SWTS. A high RCS attracts the active homing target missiles and could cause significant damage to the SWTS and its payload systems. RCS is highly directional. The two active homing target missiles are the Harpoon and Exocet. Both are sea-skimming missiles, so the RCS at the sea level aspect must be minimized. Two major factors of RCS are shape and material.

To reduce RCS, the RF energy of the target missile emitter must be reflected away from the receiver. By Snell's law, the angle of incidence is equal to the angle of reflection (Figure 8-1). A vertical side that is sloped 10° back from vertical will reflect the signal 20° above the surface. Diffraction of the wave will result in some of the incident power being returned along the sea surface, but the power in this diffracted wave is typically several orders of magnitude less than the main reflected beam.

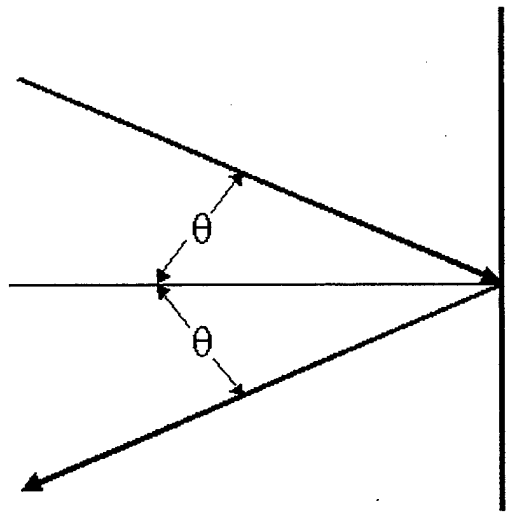

Figure 8-1: Snell's Law of Reflection

A dihedral is two flat surfaces that are joined at right a right angle. They are excellent reflectors. Any energy transmitted into the dihedral is reflected anti-parallel to the incident wave receives a large reflected wave as shown in Figure 8-2. This results in a large return signal. If the incident wave has motion transverse to the axis of the dihedral, the wave will be reflected along the axis of the dihedral according to Snell's law. Therefore, only an emitter normal to the axis of the dihedral will receive a large reflected wave.

Trihedrals are three-dimensional dihedrals. They are shaped like the corner of a room. Trihedrals reflect all incident waves back down the anti-parallel propagation path, even waves with motion transverse to one of the dihedral axes. This makes trihedrals excellent reflectors for all Angles of Arrival. Trihedrals are the reflectors used on the decoy barge (See Figure 2-3).

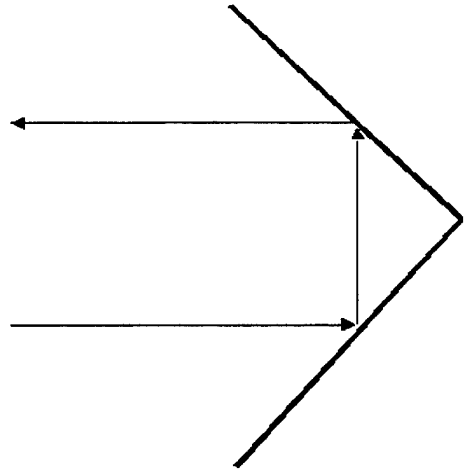

Figure 8-2: Reflection in a Dihedral.

The material construction of the exterior surfaces determines the reflective characteristics of SWTS. Generally, less conductive materials are less reflective. Structural materials in ships are typically conductive and therefore reflective. The technique employed to reduce the reflectivity of the exterior of the SWTS is the use of anti-reflective coatings. SPRUANCE class destroyers have been fitted with Passive Counter Measure System (PCMS). PCMS is a partially reflective coating. A fraction of the incident wave is reflected at the surface of the PCMS, the remainder is passed to the skin of the ship. At the skin of the ship, the wave is reflected and transmitted back into the atmosphere. The PCMS is designed to have a thickness that will return the reflected wave with a 180° phase difference from the surface reflected wave. Destructive interference occurs under these conditions and returns a small signal to the target missile receiver. PCMS is designed for specific frequencies because the thickness and material of the PCMS must be chosen to maximize the destructive interference. PCMS will be used extensively on SWTS.

8.1 Radar Cross Section of ex-DECATUR and USS O'BRIEN.

Radar Cross Section data for the DECATUR and all commissioned American warships is classified or limited distribution. Furthermore, the TSSE team does not have access to a detailed RCS computer code. This report is unclassified and unlimited distribution, so the RCS of the

DECATUR and O'BRIEN are estimated from the radar cross section of Soviet warships. Section 17.3 explains how a more detailed classified study of the Radar Cross Section should be conducted.

Soviet KOLA Class Frigates displace 1900 LT (long tons). The aspect averaged radar cross section is 41 dBsm (decibel square meter). This is a radar cross section of 12,600 square meters. The ex-DECATUR displaces 4100 LT. The displacement is approximately double the KOLA, so the RCS is estimated at double the KOLA, 24,000 square meters.

Soviet KRIVAK Class Destroyers displace 7000 LT. The Aspect Averaged Radar Cross Section is 45 dBsm. This equates to a RCS of 30,000 square meters. USS O'BRIEN displaces 8200 LT, therefore the RCS is estimated at 30,000 square meters.

Ships have a complex geometry, and the DECATUR and O'BRIEN were constructed with numerous right angles. The right angles are di- and trihedrals that generate large radar returns. Estimating the magnitude of these returns, the surface area of the ships is compared to the RCS. If 50% of the RCS is due to the hull and superstructure, the ratio of the surface area of the hull and superstructure to the RCS is the Directivity Factor for the Hull and Superstructure. Appendix H, Tables H-1, and H-2, calculate the broadside surface area of the ex-DECATUR and O'BRIEN. Table 8-1 computes the Directivity Factor. This Directivity Factor is used to compare one square meter of the skin of the ship to the apparent return strength.

	ex-DECATUR	USS O'BRIEN
RCS	24000	30000
50% of RCS	12000	15000
Surface Area	930	1480
Hull & SS DF	12.9	10.1

Table 8-1: Hull and Superstructure Directivity Factor.

A directivity factor for the O'BRIEN's weapons and sensors is computed in a similar manner. The remaining 50% of the RCS is due to the weapons, masts, and sensors. The RCS is distributed equally among all three segments. The 5000 square meters of RCS from the masts will scale as the enclosed volume of the mast. The sensors and weapons each contribute 5000 square meters to the total RCS. Appendix H, Table H-3 computes the surface area of the weapons and sensors. The Directivity Factor for these systems is the ratio of surface area to RCS and is shown in Table 8-2.

	Weapons	Sensors
RCS	5000	5000
Surface Area	58	44
Hull & SS DF	86.2	113.6

Table 8-2: Weapons and Sensors Directivity Factor.

8.2 Modifications to the Hull and Superstructure.

The hull and superstructure are modified to accommodate the new systems added to the SWTS and the new functions of the SWTS. Certain modifications have been completed solely to reduce the RCS. A detailed analysis of the impact of each modification is provided in Table H-4. The description of each line item is provided here.

1. Construction of Weapons Foundation steps on the flight deck. The surface area of the foundation is 42 m^2. The surfaces are smooth and the joints are not right angles with any deck, so there is no Directivity Factor. The surfaces are sloped approximately 10 degrees from vertical. Any sea skimming missile's targeting radar would only receive a return from a sidelobe 20 degrees from the main axis. This is approximately 1% of the main axis power.

2. Weapons Foundation Blocks Hangar. 42 m^2 of the hangar area are hidden by the weapons foundation. This area had a directivity factor of 10. Because the weapons foundation is on the starboard side of the flight deck, this benefit is only achieved over 50% of the observation angles.

3. Angled Bulkheads around Missile Deck. False bulkheads cover the vertical bulkheads around the missile deck. These bulkheads are angled 10 degrees. 26 m^2 of original bulkhead with a DF of 10 is covered. The cosmetic bulkhead is smooth like line 1; only 1% of the reflected power is reflected along the sea surface.

4. Angled Bulkhead around Fantail. Similar to line 3. The covered area is thirty-five square meters.

5. Boat Deck False Wall. The boat decks are cluttered, specifically the starboard boat deck houses the crane and ship's boat. On each boat deck, an eleven-foot tall wall is erected to eliminate the return from the boat deck. The wall is twenty four feet long. 26 m^2 of the boat deck are disguised. The wall is sloped 10 degrees.

6. Installation of Barge Ramp. The Barge Ramp is 24 feet wide, the transom is 12 feet tall. 28 m^2 of reflecting surface are removed. The dihedral effects off the sea surface give the x10 DF. The sloped deck reflects all energy upwards, away from an incoming missile.

7. Enclosing the Weather Deck Passage beneath the Hangar. The p-way beneath the hangar is enclosed with a smooth wall. The p-way is 8 ft tall, 46 ft long. Directivity Factor is due to right angle construction. The projected area over the aft aspects is 50%.

8. RAM Paneling on Superstructure. The surface area of superstructure is approximately 510 m^2. The superstructure has a Directivity Factor of 10. This area will be covered with the RAM paneling presently used on SPRUANCE Destroyers. This material is approximately 80% effective at reducing the RCS of the superstructure.

9. RAM Paneling below Maindeck. The hull is covered with PCMS coating for 10 feet below the weather deck along the entire length of the ship. This material is identical to #8. The surface area covered is 10ftx560ft=520 m^2. The PCMS is 80% effective at this wavelength. Because sea skimming missiles observe a dihedral surface between the sea surface and the hull, this is a critical surface to coat.

10. Remove Clutter from skin of the ship. Naval vessels typically carry significant equipment, such as refueling equipment, life rafts, and firefighting stations, on the skin of the ship. This material contributes a multitude of di- and trihedral surfaces for radar reflection. These reflections are estimated as 5% of the RCS.

The changes to the RCS of the hull and superstructure reduce the RCS from 15,000 m^2 to 4,500 m^2.

8.3 Modifications to the Weapons, Sensors, and Masts.

Many of the original sensors and weapons are removed. Those that remain have been rearranged. The RCS of many of the sensors and weapons is calculated in Table H-3. The contribution of these modifications is calculated in this section.

18. Place CIWS on the Weapons Foundation Steps. The RCS contribution does not change by moving the CIWS Mount.

19. Addition of Camera Mount. The area of the camera mount is 4 m^2. The DF is 100.

20. Addition of CIWS Camera. The camera is 1 m^2. The DF is 100.

21. Remove excess mast area. The entire mast is 5000 m^2 RCS. Approximately 25% is removed.

22. RAM Paneling on Masts. 3750 m^2 of Mast remain. The RAM paneling is PCMS identical to the material placed on the sides of the superstructure and hull. It is placed on a fiberglass backing for structural support. The PCMS eliminates 80% of the return.

23. Install RAM. Pedestal and launcher have surface area of 6 m^2. DF is 100.

24. Remove TAS and SPS-40. TAS area is 2 m^2; SPS-4 area is 4 m^2. DF is 100.

25. Install SPS-49 and SPS-48. SPS-49 area is 12 m^2; SPS-48 area is 10 m^2. DF is 100.

26. Remove Mk 29 Missile Launcher. Launcher area is 16 m^2. DF is 100.

27. Install Mk 91 Missile Director. Pedestal and antenna area is 3 m^2. DF is 100.

The RCS of weapons, masts and sensors is reduced from 15,000 m^2 to 11,800 m^2.

8.4 Results of RCS Calculations.

The RCS of SWTS is 16,200 m^2. This is significantly less than the DECATUR's RCS. The RCS of the decoy barge can easily seduce missile seekers away from the SWTS.

8.5 Analysis of Alternatives Radar Cross Section.

Table H-5 through Table H-8 detail the RCS calculations for each of the Alternatives. The approximations and methods used to determine the RCS of the SWTS are used to determine the RCS for each Alternative.

Chapter 9: *Engineering*

Two major engineering modifications are set by the ORD. The first is the conversion of one engineroom to be utilized as a Test Engineroom. The second is the conversion of all steam services to electric. The propulsion system of the SPRUANCE class, Figure 9-1, includes four LM2500 Gas Turbines Modules (GTM) that are arranged in pairs, two per shaft. The aft engineroom delivers power to the starboard shaft and was chosen to be the Test Engineroom because of the space arrangement and the shorter shaft. Equipment to support #2 Gas Turbine Generator (GTG) and the starboard shaft will be maintained in an operational state. The SWTS will utilize two GTMs for main propulsion and three GTGs for electrical power. A detailed description of the propulsion plant is included in Section 9.1.

The conversion from steam to electric consists of removing all the steam-generation and steam-operated equipment and the replacement of the steam-operated ones with electric, as described in Section 9.6.

Further modification of the engineering systems is unnecessary to support the mission of the SWTS.

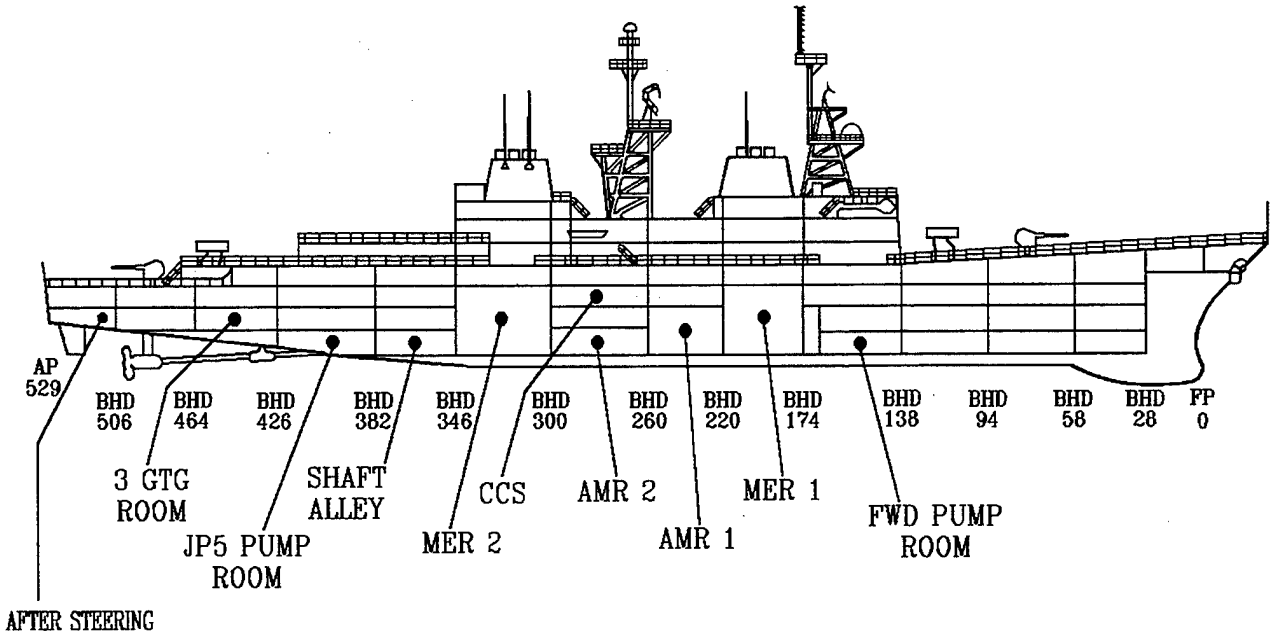

Figure 9-1: DD 963 Engineering Spaces

9.1 Propulsion Plant

The propulsion plant consists of the GTMs, the combustion air inlet, exhaust outlet, main reduction gear, shafting and bearings, the controllable pitch propeller, fuel oil service, lube oil service, and all the associated controls and instrumentation. The total remaining installed power is 40000 hp and is more than enough to sustain a speed up to 17 knots. The maximum speed is constrained by torque limitations on the shaft. Cruising on a trailing shaft is a normal procedure, and it is easy and fast to accomplish since the two CRP propellers have independent hydraulics and controls. The controls for the main propulsion plant are located in the Central Control Station (CCS) with manual backup controls in the engine rooms. Further description of the Integrated Control System is given in Section 7.5.

Each engine room is serviced by a complete and independent fuel oil service system. Each engine room also has a self-contained lube oil system for the reduction gear and the thrust bearing. The lube oil system for the GTGs is separate and is not affected in any way by the split of the engine rooms.

The start air system consists of two HP compressors and the bleed air supplied by the GTMs. The bleed air system also supports the masker air and prairie air systems. These systems are placed in lay-up. The start air system in the forward engineroom is functionally identical to the one in the aft engine room. The emergency starting of the GTGs will not be affected by the SWTS engineering configuration since there is a high air pressure interface between each engine room and #3 GTG.

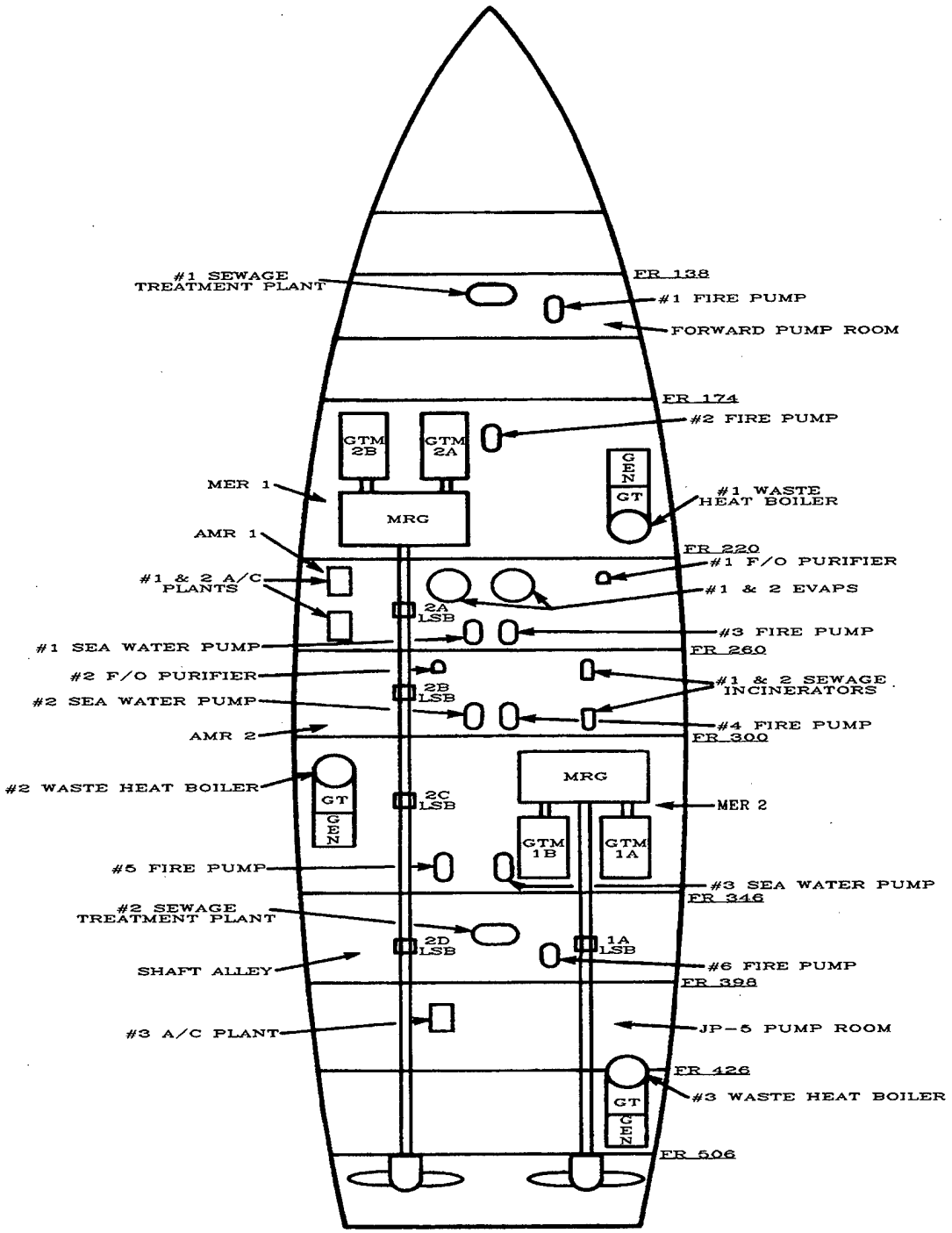

Figure 9-2: Layout of Engineering Spaces.

9.2 Central Control Station Layout

The Central Control Station (CCS) is positioned on the centerline of first platform. The layout of the CCS is shown in Figure 9-3. It is the command and control center for propulsion, electrical and auxiliary systems. The main Engineering Control and Surveillance System (ECSS) is an automated electronic control and monitoring system using analog and digital circuitry. The ECSS has the capability of controlling the propulsion plant, electric plant, and supporting auxiliary machinery. Key features of this system are located in CCS (Table 9-1).

ECCS			
PAMCE	*PAMISE*	*EPCE*	*SCE #1*
Propulsion & auxiliary Machinery Control Equipment	*Propulsion & auxiliary Machinery Information Systems Equipment*	*Electrical Plant Control Equipment*	*Signal Conditioning Enclosures #1*

Table 9-1: Components of the Engineering Control and Surveillance System.

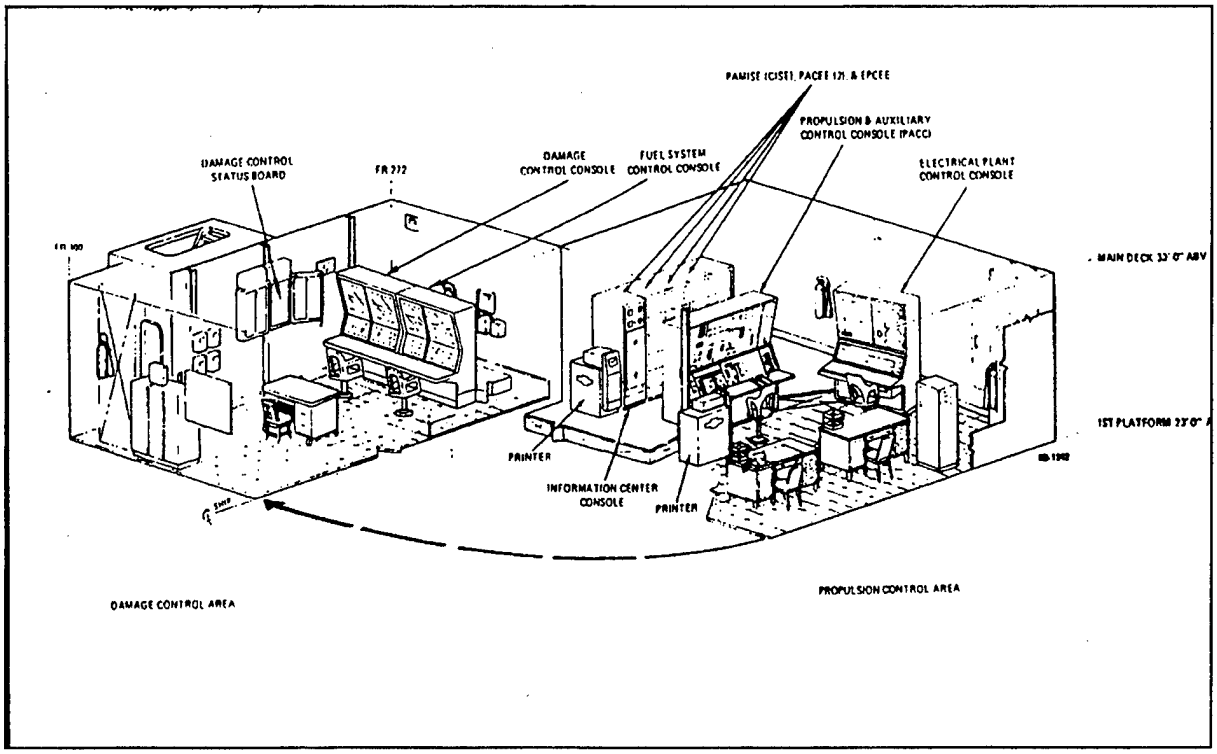

Figure 9-3: CCS Layout.

The new elements of the Ship's Remote Control System (SRCS), the CAN nodes described in section 7.5, are integrated with this system. Additionally, in the DC area of CCS, the new Two Wire Automatic Remote Sensing Evaluation System (TWARSES) display units will be installed.

9.3 Electric Power Generation and Distribution

There are three identical GTG sets connected to the main power distribution system. Each GTG has an independent lubricating oil and seawater cooling system. The seawater cooling system has an emergency automatic backup supply from the seawater service system. The operation of the GTGs and power distribution is controlled from the EPCC in CCS.

The total electric power installed is 6000KW, which is well above the required consumption. The worst case underway load is approximately 2850KW and 3120KW for battle conditions. The steam to electric conversion requires the addition of a sixth load center to handle the additional electric loads. This is located in AMR 1. The existing DD 963 load centers are modified to handle the additional combat system loads of SWTS.

9.4 Services for Weapons and Sensors

Generally, the components of the combat system, including sensors and weapons, require specific ship services such as electrical power and cooling water. An analysis by comparison was conducted to determine the adequacy of current engineering services in the DD 963 hull, which are to be retained. The SWTS sensor/weapons payload is reduced compared to a DD 963 or DDG 993 and therefore requires less service provision. It is therefore concluded that services for the proposed SWTS payload are adequate, with additional capacity for future expansion of non-high energy components.

9.5 Test Engineroom

The ORD requires one of the enginerooms be reserved as an HM&E test platform. This would allow at sea testing of new propulsion and auxiliary systems (e.g. Inter-Cooled Recuperative (ICR) Gas Turbines, main propulsion motors, fuel cells, etc.) without hindering the operations of a commissioned ship. The SWTS utilizes the main propulsion section of MER2 as the test engine room. The port side of MER2 contains #2 GTG and its associated auxiliaries that will remain in service. The engineroom of the SPRUANCE class is an ideal HM&E test platform with ample space, installed fuel and lube oil systems, high and low pressure air systems,

seawater cooling systems and electrical power. The aft engine-room was chosen because of its better accessibility (shorter removing routes) and its shorter shaft.

9.6 Steam to Electric Conversion

The SWTS will be an all-electric ship. The service steam system on the SPRUANCE class is labor intensive to operate and maintain. The conversion from steam to all-electric is not a new alteration for the SPRUANCE class. NAVSEA has already proposed and completed the conversion (K type SHIPALT) of several DD 963 class ships.[1] USS O'BRIEN has not completed this conversion. This SHIPALT replaces the three waste heat boilers and all steam supported equipment with electrical equivalent equipment. The SWTS steam to electric conversion is modeled on this SHIPALT but is not as comprehensive. SWTS does not require as robust a habitability support system as the SHIPALT calls for due to the small crew size and limited underway time.

9.6.1 Fresh Water Production

A major aspect of the electric conversion is removal of the flash-type distillers and replacement by two Reverse Osmosis (RO) Desalinization Units. The reduced crew size and removal of the waste heat boilers from SWTS lowers the need for fresh water to 5,000 gallons per day.[2] Two RO units, with a total capacity of 10,000 gallons per day, are installed in AMR1. Distilled water, for electronics cooling makeup and gas turbine wash down, is supplied from the reserve feed tanks. These tanks, located in MER 1 and 2, have a combined capacity of 1200 gallons. These tanks, which are filled pier side, provide ample volume for the short underway periods.

The RO units are controlled locally from the control panel that is mounted next to the membrane module skid. The freshwater distribution system is modified to blank off unneeded services, such as the sonar system.

9.6.2 Chilled Water and Heating, Ventilation and Air Conditioning (HVAC)

Temperature, humidity, and air purity in the SPRUANCE class are controlled by heating, cooling, and filtering ambient and replenishment air. Heating is accomplished with electric heating

elements and cooling with chilled water cooling elements. The DD 963 class has three air conditioning units, two located in AMR 1 and the third in the JP-5 pump room. Chilled water from these units is pumped to the self-balancing chilled water system. This system provides chilled water to the HVAC and electronics cooling systems.

The four steam hot-water heaters are replaced by electric hot-water heaters. These electric units are placed in the same positions as the steam units. The replacement must follow the existing procedures set by NAVSEA.

9.6.3 Galley and Laundry Equipment

The new galley equipment is all-electric. This requires the replacement of the galley steam kettles and the scullery dishwasher. Two 20-gallon kettles and the vegetable cooker are sufficient to accommodate the SWTS crew size. The extra hot water booster heater (proposed by the SHIPALT) is important since the need for hot water in the galley is now increased due to loss of steam services.

Laundry facilities are located in space 1-390-1-M, the former port torpedo room. Power and water connections are already available in these spaces. This space provides easy access for the installation and removal of equipment. Additionally, the dryer exhaust is easily ventilated overboard. Five washer/dryer pairs, ironing and folding tables are available in this space.

9.6.4 Fuel and Lube Oil Heating

Four service heaters and two fuel-oil transfer heaters control the fuel-oil system temperature. Fuel-oil service tanks are equipped with steam heating coils to maintain the temperature of fuel above 70°F. All these heaters and coils are currently steam operated and are replaced by electric heaters.

The lube-oil service system delivers oil at the correct pressure and temperature to the Main Reduction Gear (MRG) for cooling and lubrication of bearings, clutch/ brake assemblies and gear meshes. The oil temperature is maintained by the oil purifier steam heaters and by the steam heating coils in the settling tanks. An equivalent electric system proposed by NAVSEA replaces the steam systems.

9.7 Damage Control

The large size and complexity of the ship, coupled with the small crew size, requires a Damage Control (DC) system that makes extensive use of remote monitoring and response systems. The SWTS DC system builds upon the excellent damage containment and engagement capabilities of the DD 963. This system allows the small civilian crew to locate, isolate and respond to casualty situations. Additionally, the use of an integrated monitoring and control system allows for casualty response in the unmanned condition. Figure 9-4 illustrates the design approach for an automated and integrated ship-wide DC system.[3]

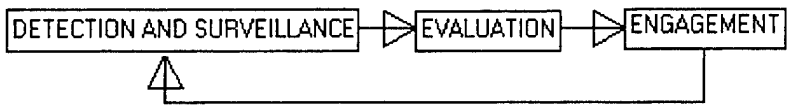

Figure 9-4: DC System Design.

The most common major shipboard casualty is fire. An analysis of reports of fires occurring on merchant vessels between 1960 and 1980 shows that over 60% of these started in the machinery space.[4] The abundance of pressurized fuel in these spaces requires rapid detection and response to prevent them from developing beyond control. The DD 963 has both AFFF bilge sprinkling and space flooding HALON systems to combat such a fire. These systems are modified to allow for remote initiation.

The engagement systems of the DD 963 are listed in Table 9-2. The systems that are modified to support remote activation are indicated by bold text. Figure 9-8 shows the firemain layout.

SYSTEM	SPACE COVERED
AFFF HOSE REELS	FORWARD FLIGHT DECK, MER1, MER2, AMR1, AMR2, FANTAIL, HELO HANGAR
HALON	**MER1, MER2, AMR1, AMR2**
AFFF BILGE SPRINKLING	**MER1, MER2, AMR1, AMR2, #3GTG, JP5 PUMP ROOM**
CO2	**GTM AND GTG MODULES**, FLAME LIQUID LOCKERS

Table 9-2: Installed Fire Protection Systems.

9.7.1 Damage Control Detection and Surveillance

The operators of the SWTS must have the ability to quickly and accurately identify casualties whether the ship is in a manned or unmanned condition. This necessitates a detection system that can identify the presence, nature and extent of a casualty and transmit this data to the remote control station for evaluation. Casualties include fire, flooding, loss of stability or buoyancy, damage to piping/wiring/IC systems, smoke and structural failure. The SWTS detection and surveillance system is built on the current DD 963 system to provide for accurate local and remote casualty evaluation.

The current DC systems of the DD 963 include various sensors located to detect fire, smoke, flooding, release of CO2 and activation of magazine sprinklers. These system are designed to be utilized in conjunction with the normal roving and stationary watchstanders to provide the ship with quick indications of potential casualties. The Damage Control Console (DCC), located in CCS, consists of two panels:

Hazard Detection Panel: This is the upper panel and mimics the ship's profile and contains indicators of the fire, smoke, temperature and flooding hazard alarm circuits.

1. **Fire Detectors**: These sensors consist of fixed temperature detectors, combines fixed temperature and rate of rise detectors, ionization (smoke) detectors and nine manual pull stations.
2. **Flooding Detectors**: Flooding detectors are in compartments below the water line. They consist of float switches that activate an alarm on the DCC.
3. **Pressure Switches**: Pressure switches indicate the release of CO2, HALON, or the activation of magazine sprinklers.
4. **Alarms**: The alarms associated with DCC include FAULT, HAZ and SUM FIRE.

Firemain Control Panel: This is the lower panel and contains the indicators and controls used to monitor the performance and status of the firepumps, firemain risers, and firemain loop.

1. **Firemain System Pressure Transducer**: Nine pressure transducers monitor the firemain system.
2. **Discharge Pressure Transducer**: Each fire pump has a discharge pressure transducer to provide an input to the DCC.
3. **Fire Pump Modes of Control**: Each fire pump has two modes of control, Inhibit and Auto. Inhibit requires operator action to manually start and stop the pump. In Auto the system logic will start and stop pumps based on header pressure.

TWARSES[5] is the Two Wire Automatic Remote Sensing Evaluation System. TWARSES is a damage control system which automatically; 1) senses problems, 2) analyzes or

identifies the problem, 3) evaluates the problem, 4) reports the location (alarms, visually and audibly) and 5) records the problem on paper and magnetic data card. This system is ideally suited for the SWTS since it can detect and evaluate casualties and then transmit this data to an off ship remote control location. TWARSES is organized into four basic divisions; sensors, scanner display unit, Uninterruptible Power Supply (UPS) and display units (Figure 9-5). The Data Link, a radio link that uses transmitters and receivers, to forward data automatically to responsible shore based Remote Display locations for necessary response, will be an integral part of the SWTS TWARSES. Sensors available for TWARSES include temperature, tank/bilge level, smoke, flame, humidity, and many gases (CO, Freon, etc).

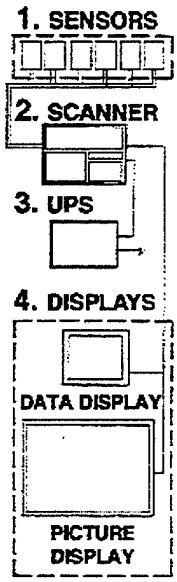

Figure 9-5: TWARSES Display Unit.

A typical shipboard installation is detailed in Figure 9-6. The SWTS will incorporate a similar system. The main display unit will be located in CCS.

The DD 963 propulsion plant has extensive piping systems to support the gas turbine modules. These systems (i.e. lube oil, fuel oil) represent a significant class-Bravo fire hazard. The SWTS will be fitted with surveillance cameras; similar to those used for the combat systems, to monitor these systems. This input, coupled with remote indication of system pressure, will allow the remote operators to quickly and accurately detect and respond to a main space lube/fuel oil rupture and/or class-Bravo fire.

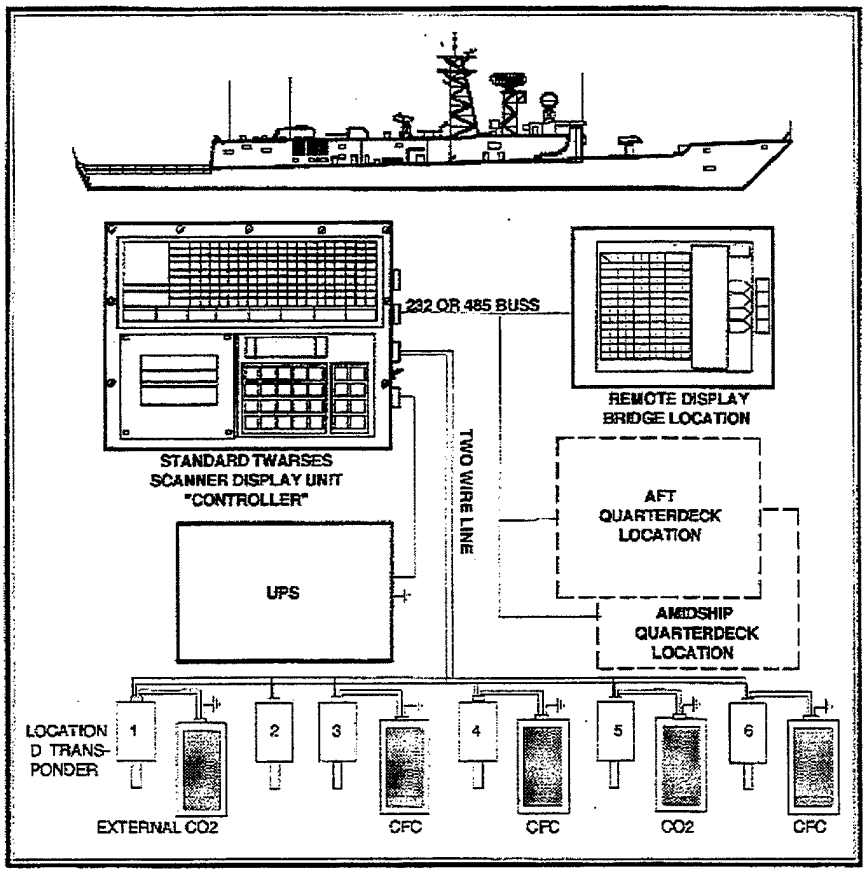

Figure 9-6: TWARSES Installed on USS GARY (FFG 51).

9.7.2 Evaluation and Decision

In the manned condition, the SWTS crew evaluates a casualty using inputs from the DCC Hazard Panel, TWARSES display unit, system parameters (temperatures and pressures) and reports from watchstanders throughout the ship. A traditional DC organization processes these inputs and makes recommendations up the chain-of-command. The SWTS DC organization is illustrated in Figure 9-7.

In the unmanned/remote controlled condition, the SWTS operators evaluate a casualty using indications transmitted via the Ships Remote Control System. Available indications are major system parameters (such as L.O. system pressure), TWARSES display unit, and

surveillance camera video. These inputs are provided to the test director with recommendations of corrective action.

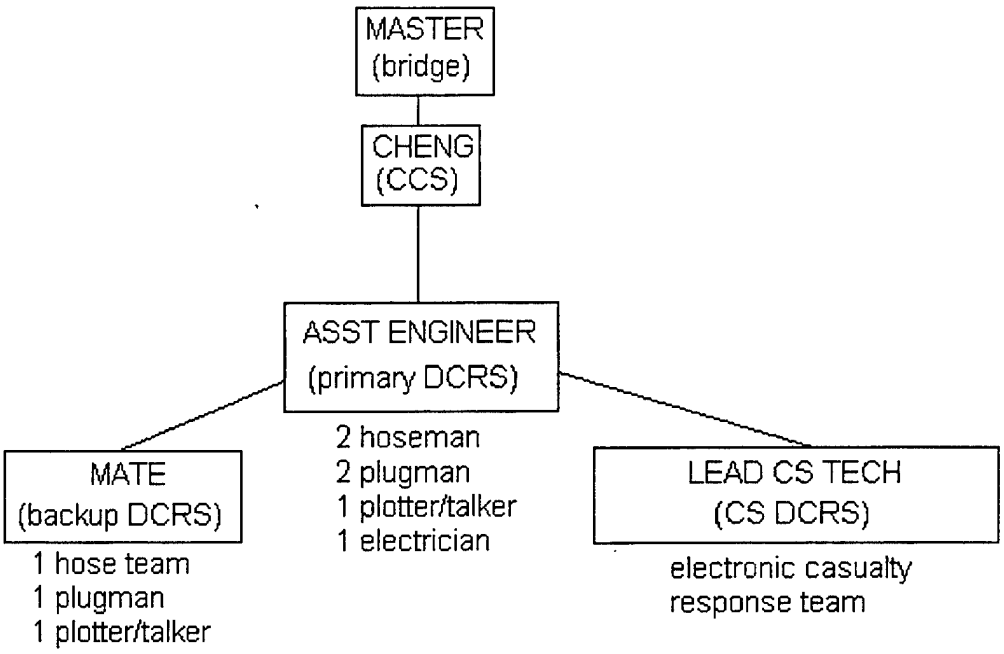

Figure 9-7: Damage Control Organization.

9.7.3 Engagement

Damage Control engagement involves the actual containment and control of the casualty by both men and equipment. The output of the above evaluation process will be the casualty response to the given indications. The SWTS uses the existing DD 963 DC systems to engage casualties such as fire, flooding and structural damage. Some of these systems are modified to activate from the remote control station ashore.

In the manned condition, all DC actions are coordinated from the Central Control Station (CCS). The Damage Control Central (DCC) area of CCS is the main command and control hub of all DC activity. This space has the required indications, communication and control equipment to monitor and coordinate the actions of the entire ship. Primary communications are via wire-free radios (WIFCOMS) with sound powered phones as backup. The current repair lockers of the DD 963 become Damage Control Repair Stations (DCRS). These three DCRS are located to provide DC coordination for broad areas of the ship. Due to the small size of the SWTS crew there is only one DC party, made up primarily of engineering personnel, which responds to the

DCRS nearest the casualty. A second DC party, made up of deck personnel, mans another DCRS and provides relief teams to the primary team. The DCRS will utilize distributed stowage to provide the most efficient access to the DC equipment for the DC party.

The positioning of the flight deck on the forecastle requires that aviation fire fighting equipment be located forward. This equipment, including AFFF hose reels and "crash and smash" locker, is located in the port and starboard forward wind breaks. An AFFF hose team mans the port side windbreak during all flight operations.

In the unmanned condition, the SWTS remote control operators respond to casualty indications using the systems modified for remote activation. These actions are utilized to contain the casualty until a rescue and assistance team can be transported to the ship to combat the casualty locally. Selected topside accesses are equipped with Rescue and Assistance/Topside Repair Stations. These stations provide stowage for equipment to support ship reentry during a casualty situation. At a minimum, these stations are equipped with positive-pressure single-bottle breathing apparatus, thermal-imaging camera, and wire-free radio. Figure 9-9 illustrates the response to a hypothetical main space fire scenario while in the unmanned condition.

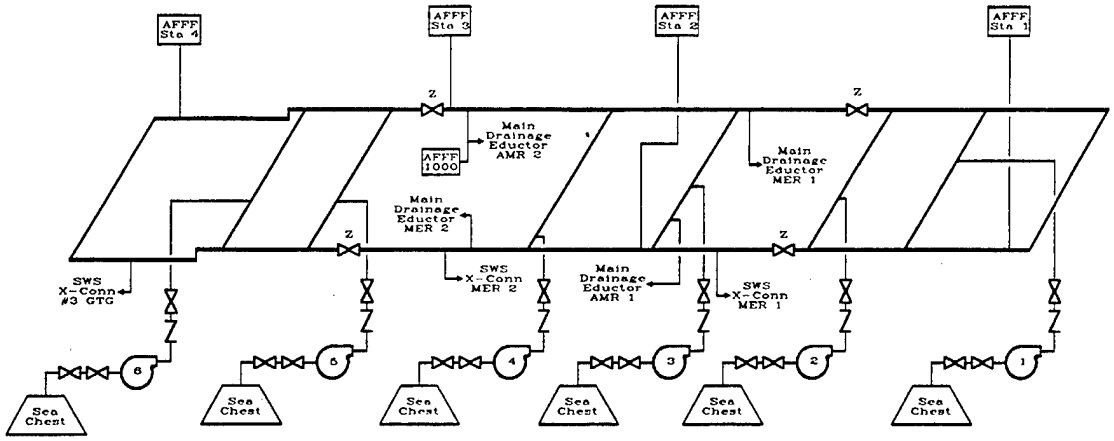

Figure 9-8: DD 963 Firemain Schematic Drawing.

LO LEAK MER 1

Dectection:

Remote operating station receives following alarms:
- low Lube Oil press alarm.
- TWARSES bilge level (MER1 cnterline) alarm

MER1 surveillance cameras reveal spraying liquid, centerline, lower level.

Evaluation:

Low press and bilge alarms, coupled with the video images, indicate a LO rupture in MER 1. Test Director orders rapid response.

Engagement:

Bilge sprinkling is remotely activated for 5 seconds.

GTM's are emergency stopped.

#1 GTG is emergnecy stopped. EPCC auto sheds loads to maintain power to ring bus.

OIL SPRAY LEADS TO FIRE

Dectection:

Remote operating station receives following alarms:
- smoke MER 1
- high temp MER 1

MER1 surveillance cameras reveal heavy black smoke.

Evaluation:

Smoke and high temp alarms, along with the video images, indicate a class Bravo fire in MER1. The Test Director orders appropriate response.

Engagement:

Bilge sprinkling is remotely activated for 15 seconds.

HALON is released into MER1.

Rescue and assistance team is deployed via helo to ship.

Figure 9-9: Hypothetical Mainspace Fire.

9.7.4 Stability

The stability of the design was analyzed using the ASSET ship design program. The ASSET model was built from an existing DD 963 model and includes the effects of the SWTS payload, the extensive superstructure modifications, and the reduced RCS enhancements. A weight report is contained in Appendix G. Table 9-3 lists the stability and trim characteristics of the ship. Figure 9-10 illustrates the intact stability of the Full Load condition. This detailed analysis showed an improvement in stability over the SPRUANCE class. This differs from the results found during the preliminary stability analysis conducted for the AoA.

Stability and Trim Characteristics (Full Load Condition)		
Displacement (Δ)		8160.5
Transverse Metacenter (KM)		26.33 ft
Vertical Center of Gravity (KG)		21.65 ft
Metacentric Height (GM)		4.68 ft
Longitudinal Center of Gravity (LCG)		-13.65 ft
Longitudinal Center of Buoyancy (LCB)		-13.65 ft
Moment to Trim One Inch (MTI)		51.36 Lton/in
Draft (mean)		19.74 ft
Trim		2.18 ft (by the stern)

Table 9-3: Stability and Trim Characteristics.

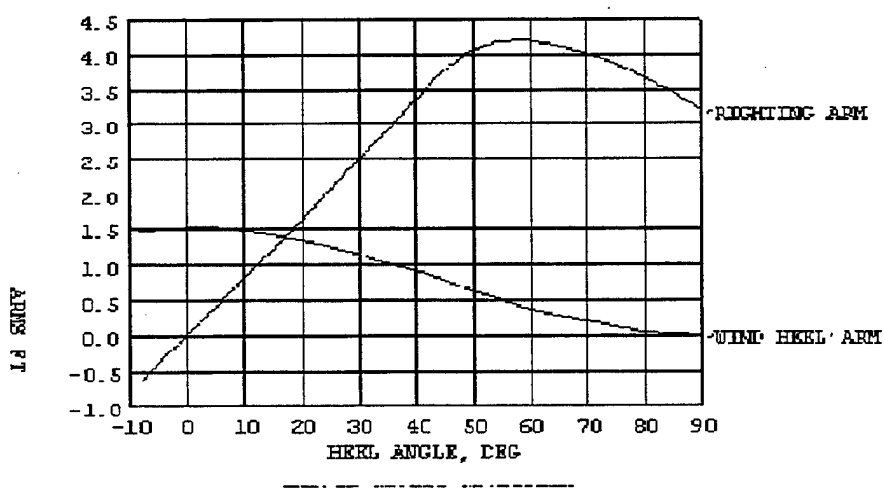

Figure 9-10: Intact Stability Diagrams.

9.8 Corrosion suppression

The extensive corrosion problems in ex-DECATUR were one of the driving factors for proposing her replacement. These corrosion problems are focused the hull and fuel tanks. The SWTS utilizes the corrosion protection system already installed on the DD 963 class. This system utilizes both impressed current cathodic protection and galvanic (sacrificial) anodes.

---

[1] Ship Alteration Record DD963/0933, Remove WHB/Steam Auxiliaries-Install RO Units, Naval Sea Systems Command, June 96.

[2] Design Data Sheet 531-1, Surface Ship Distilling Plant Sizing Details, Naval Sea Systems Command, July 1986.

[3] David Geer, Advanced Damage Control System, Naval Engineers Journal, May 1988.

[4] A.W. Finney, Design of Fire-detection and Alarm Systems - Current Trends and State of the Art, The Institute of Marine Engineers, Transactions, December 1985.

[5] TWARSES Training Manual, PHD NSWC, Code 4L03, October 1994.

Chapter 10: *Habitability*[1]

Habitability can affect the health, motivation, and performance of a ship's crew. The SWTS improves upon the existing DD 963 habitability configuration in an attempt to satisfy the off-duty related needs (sleep, food, personal hygiene and recreation) of the crew. The ship supports a crew and rider complement of 150 (including 12 females) for up to 14 days underway. For the purposes of this section, "crew" is meant to include both the civilian contractor crew and the test riders.

10.1 **Berthing**

The berthing compartments are outfitted to provide more personal space for the predominantly civilian crew. The berthing arrangement makes use of the officer staterooms, chief's berthing and three of the enlisted berthing compartments. The officer staterooms are used to berth the ship's civilian and military officers. The CPO Berthing compartment becomes the female berthing area. The Navy three-high "coffin" racks of the enlisted berthing areas are replaced with officer-type, two-high racks. These spaces are used for contract and Navy crewmembers and visiting test personnel (riders). A typical crew berthing arrangement is illustrated in Figure 10-1. The location and use of each stateroom/berthing compartment is listed as Table 10- 1 below:

	Compartment	Use	No. of berths	Cumulative # berths
1)	01-220-0-L	VIP berth	1	1
2)	03-174-1-L	Masters cabin	1	2
3)	01-312-2-L	Chief Engineer	1	3
4)	(11) 01-Staterooms	Civ/Mil Officers	22	25
5)	1-224-0-L	Female berthing	14	39
6)	1-356-0-L	Crew berthing	32	71
7)	2-346-0-L	Rider berthing	44	115
8)	3-346-0-L	Rider berthing	52	167

Table 10- 1: Berthing Compartment Schedule.

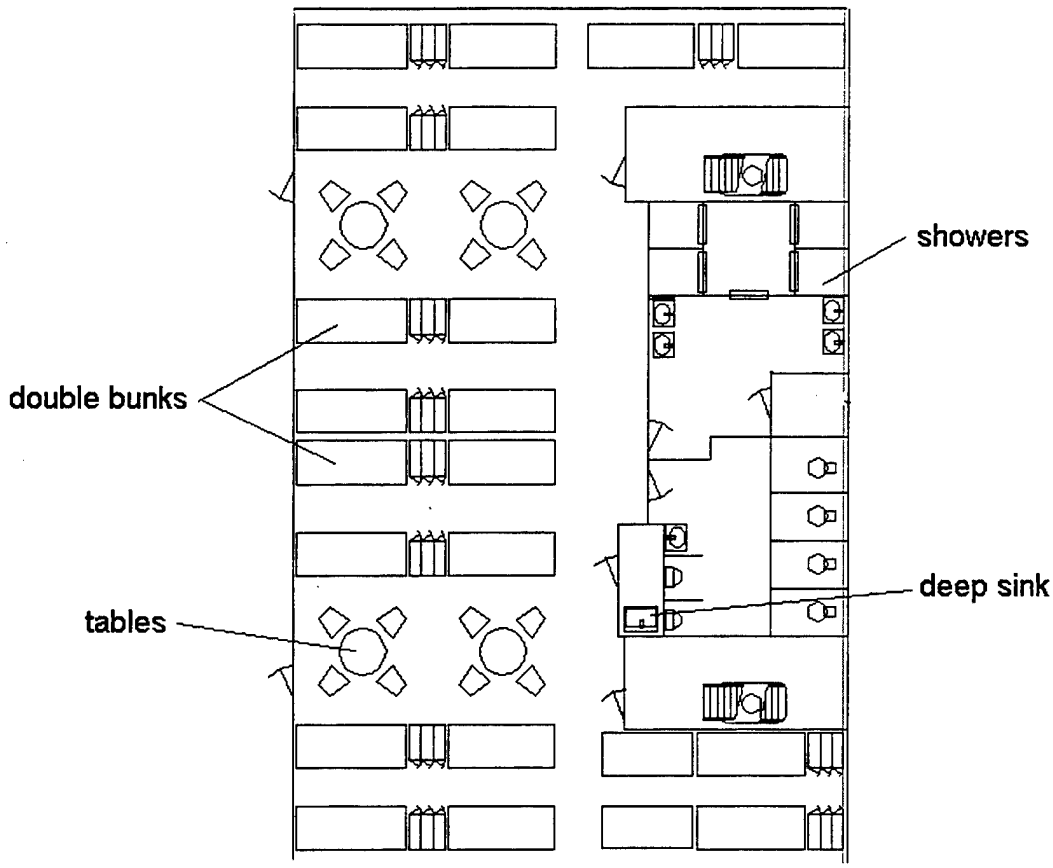

Figure 10-1: 44 Man Berthing Compartment.

10.2 Crews Recreation and Messing

The SWTS has designated crew lounge/recreational spaces. These include the crews lounge (1-248-1-L) and mess (1-260-1-L). These spaces accommodate audio and visual entertainment systems, recreational computers, comfortable chairs and library facilities.

The Ships Stewards Department handles all food preparation needs. There is no steward service for staterooms or berthings. All crewmembers are responsible for their own berthing compartment cleanliness. The ship uses a contract crew to man the stewards department. Galley facilities are modified to more efficiently meet the needs of a smaller crew with few extended underway periods. These modifications include replacement of all steam components with electric and using the mess decks as the only food service area. No separate officer messing area is provided.

Port Hueneme had requested that the current refrigeration plant (freezer/chill boxes) be removed and stand-alone freezer/refrigerator units be utilized. The current SDTS uses this system for refrigerated stores. Design calculations on the required refrigerated capacity, based on 150 people and 14 days, precluded the use of stand alone freezer/refrigerator units[2]. These calculations indicated that 263 cu. ft of chill and 368 cu. ft of freezer volume would be required. This would require the use of sixteen 40 cu. ft stand-alone units. For cost, space, and efficiency reasons, this option was rejected and the current freeze and chill boxes are maintained in the conceptual design.

10.3 Refuse Strategy

Due to the small crew size and limited underway periods, all solid waste (other than food waste) will be held on board and disposed of at the pier. Food waste will be discharged overboard according to regulations.

---

1 R. Taggert, ed., Ship Design and Construction, Robert Tapscott, *General Arrangement,* (New York: The Society of Naval Architects and Marine Engineers, 1980).

2 Roy L. Harrington Marine Engineering , E.E. Stephenson *Piping Systems,* (New York: The Society of Naval Architects and Marine Engineers, 1980)

Chapter 11: *Special Evolutions*

The following topics address special ship evolutions that are affected by the ship's configuration. Changes to the SPRUANCE configuration include the new flight deck, Enclosed Accommodation Ladder, Barge Ramp, boat deck and ammunition handling equipment.

11.1 Flight Operations

SWTS flight operations include the removal of the last personnel aboard ship prior to remote operations, insertion of EOD personnel to mechanically safe weapons/check for unexploded ordnance and the return of essential crew following completion of remote operations. Additional flight operations may include routine transfer of VIP observers and re-supply of parts and stores. Currently, personnel transfers are conducted using a civilian-contract commercial helicopter (typically a Bell JetRanger or Long Ranger). Operations are conducted during good visibility/visual approach conditions. There is no Navy-type flight deck personnel organization. Helicopter control is conducted from the bridge reducing manning and improving bridge team situational awareness. The contract crew will operate fire fighting equipment and load/unload personnel and cargo from the helicopter.

11.1.1 Forward Flight Deck

The original DD 963 helicopter deck aboard SWTS is decommissioned as previously discussed. The platform-type helicopter deck from ex-DECATUR, a 50 x 30 ft structure, is installed on the SWTS bow in place of MT 51. Aft and side bulkheads of the helo deck supporting structure are angled with RAM panels to negate any RCS additions caused by the installation. Fire fighting and rescue equipment are located inside the windbreaks, port and starboard 01 level. Low RCS safety nets are installed along the outboard edges of the helicopter deck. There are no landing aids as only daylight visual approaches are made by the contract helicopter. Nominal deck lighting is provided but night flight operations are for emergencies only. The helicopter deck is structurally capable of supporting military helicopters up to 10 tons (H-60, H-46) for emergency purposes.

Advantages of the forward helicopter deck include:

a. Frees vital space aft for SSDS weapons and sensors.

b. Allows helicopter to approach ship out of armed weapons firing arcs and to land EOD personnel vice winching down from a hovering helicopter.

c. Fewer obstructions for helicopter to avoid.

d. Any damage to the SWTS will likely happen in the stern where the target missiles are arriving and weapons are located. The Forward Flight Deck allows emergency response personnel to deploy to these locations.

Further analysis is required in the area of wind limits and deck motion specific to this forward location (Section 17.3).

11.2 Personnel Transfer

Personnel transfer to and from SWTS is a key evolution in preparation for remote operations and testing. Up to 150 personnel, (contract crew, Navy observers, industry technicians, VIPs, etc.) embark the ship at PHD NSWC for the transit to the test area. Prior to a live-fire test under remote operation, the majority of personnel disembark by boat at Dutch Harbor, San Nicolas Island in the PMTR. The remaining crew and test personnel transit the ship to the live-fire range, place it under remote control and disembark by helicopter. Quick, safe and efficient personnel transfer are key to successful test operations.

11.2.1 Enclosed Accommodation Ladder ("French Doors")

Standard Navy accommodation ladders are manpower and time intensive to setup and takedown. Additionally, they can present a large RCS on the weather deck. The enclosed accommodation ladder, or "French Doors", is an effective solution to this problem. The concept is similar to the doors, or "sally ports", used on merchant ships with high slab sides. These doors are typically 10 to 15 above the waterline on a merchant ship and provide access to tugs and boats. The method has been used by the French Navy in the LAFAYETTE-class frigate, lowering the door to within feet of the waterline by enclosing ladders inside the hull. The primary reason for the French design is to reduce the RCS. When the flush door is closed, there is zero RCS contribution from personnel transfer equipment. An additional advantage is improved safety since personnel now step out a door onto the boat deck instead of climbing down unsteady pilot ladders.

The SWTS enclosed accommodation ladder is pictured in Figure 11-1. Located to stbd, it consists of a watertight 10 by 10-foot cofferdam running from the main deck down to the 3rd deck. It is accessed from the interior of the main deck and uses short, wide, low inclination ladders to reach two levels. The upper level with associated door is 10 feet above the waterline to allow access to range boats and tugs. The lower level door is 4 feet above the waterline to allow access to smaller boats such as the SWTS whaler. A grated lower deck allows water to drain to an underlying bilge where a bilge pump discharges it overboard.

With no vertical climb, "step over" boarding and easily negotiated interior ladders protected from the weather, the enclosed accommodation ladder is a major safety improvement over pilot ladder personnel boarding. Transfer operations, however, are still restricted by high sea states in unprotected waters.

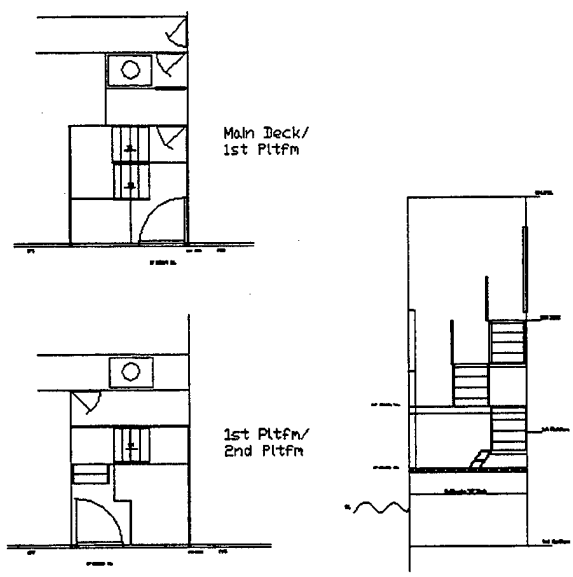

Figure 11- 1: Enclosed Accommodation Ladder.

Finally, the zero RCS contribution and very low manpower requirement of the enclosed accommodation ladder effectively meet the design philosophy of the improved SWTS.

11.3 Towing Operations

To conduct live fire tests the SWTS is required to tow a target barge. The tow length of the barge is anywhere between 100 and 300 feet. The SDTS's procedure for towing requires the ship to anchor near SNI, and a harbor tug brings the barge out to the ship. The towing hawser is connected to a bit on the fantail. The Barge Ramp eliminates the need for tug services. Tug services for each at-sea test using the target barge costs $6,000 per day with a three-day minimum. This translates to a minimum cost for tug services of $18,000 per test. If the test is canceled within 12 hours of the original underway time, PHD NSWC is still obligated to pay for the tugs services. By making the target barge an organic asset, the tug costs are eliminated.

11.3.1 **Barge Ramp**

The barge ramp is a sloped deck extending past the original stern of the ship as shown in Figure 11-2. The TACTAS and NIXIE systems are removed to make space for the new deck. The dimensions of the deck are 20 x 33.5 ft at an angle of 24° from the horizontal. Two horns extend 10 ft past the stern of the ship to ensure that the beginning of the ramp is below the waterline. Rollers line the ramp where the barge pontoons will contact the deck to ease retrieval and deployment. The sides of the ramp are angled to eliminate dihedrals and minimize any addition to radar cross section.

The ramp would not be possible without the horns because the ramp needs to project below the waterline. If the ramp did not extend past the stern, there would be a conflict with the steering system.

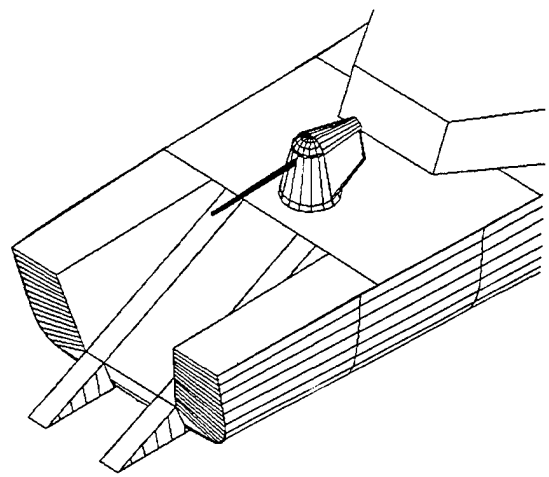

Figure 11-2: Barge Ramp.

11.3.2 **Winch System**

A towing system is installed on the second deck in the space just aft of the 5"/54 loader drum room. The towing hawser runs up through the overhead to the ramp deck. The hawser is redirected by a pulley or roller and connected to the barge. The system is similar to a tow winch installed on a tug. The system is operated manually. The winch is water tight because of the hole in the overhead.

11.4 **Boat Deck Operations**

The SWTS retains a ship's boat for personnel transfer and emergency recovery. The boat is either a 24-foot rigid hull inflatable boat (RHIB) or a commercial boat similar to a Boston Whaler. The extending crane transferred from the SDTS is used for launch and recovery. The boat deck is partially screened by a vertical bulkhead to reduce radar cross section as shown in

Figure 11- 3. The boat is lifted over the vertical bulkhead and secured at the 01 Level to allow embarkation/debarkation through a door in the bulkhead.

The extendable crane is also used for onloading/offloading stores and equipment and for rigging shore services such as shore power cables up to the 03 level.

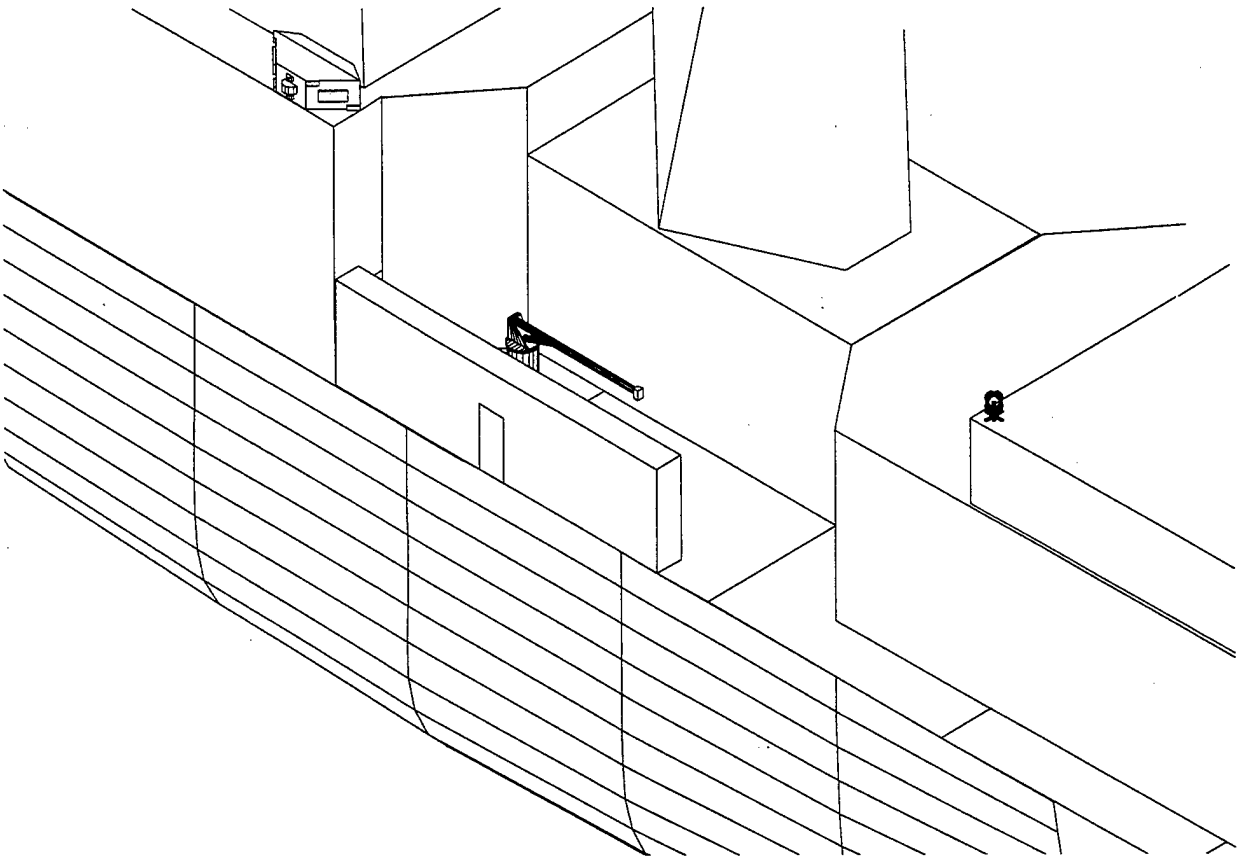

Figure 11- 3: Starboard Boat Deck with Crane.

11.5 Ammunition Handling

Ammunition is stowed onboard in accordance with OP-4 (Ammunition Afloat). During inport periods, ordnance is stored in shore magazines maintained by PHD NSWC. The ordnance is transferred to the ship the same day the ship is scheduled to get underway. The ammunition is stored onboard in the appropriate magazine. The Main Magazine (for RAM missiles) is on the O-1 level in the former NSSMS Magazine. The CIWS Magazine is on the O-2 level in the former Torpedo Magazine. The 5"/54 projectile and powder magazines are placed in a laid-up condition.

Once the ship is underway the weapon systems are uploaded. The CIWS rounds are hand carried to the mount. The RAM missiles are located one deck below the launcher. A hoist is rigged on the missile deck to transfer the missile packs (3 missiles per) to the launcher.

After the tests are complete, the weapons are downloaded and the remaining ordnance is returned to the appropriate magazines. Once the ship enters port, the ammunition is transferred back to the shore facilities.

Chapter 12: *Safety*

The Surface Warfare Test Ship includes many of the safety features standard on Navy ships. It also includes innovations that make special evolutions significantly safer.

The forward Flight Deck is a significant safety feature. The SDTS required an EOD Technician repel onto the forecastle in order to ensure that the weapons are safed. The helicopter can now land on the forecastle, far from the firing arcs of the aft weapons.

The Enclosed Accommodation Ladder provides a safer means of boat transfer. It eliminates the need for Pilot Ladders or external Accommodation Ladders that are difficult to negotiate.

Lifeboats are provided for 150% of the crew. These are located on the 04 Level forward and stored behind a signature-reducing bulkhead similar to the stowage used on LPD 17.

The TWARSES system provides continuous early detection for fire and flooding. This early detection system improves the likelihood of containing damage in the event of an emergency.

Chapter 13: *Integrated Logistics System*

Despite the modifications made during conversion, the Surface Warfare Test Ship remains mostly a SPRUANCE Class ship below the maindeck and in many compartments above the maindeck. It possesses the Navy's most common engineering plant and is homeported at the Navy's leading Combat Systems Engineering facility. Experience and support for SWTS will be easy to obtain. The specific components of the Integrated Logistics Systems are addressed below.

Maintenance Planning. The SWTS will continue on the O'BRIEN's cycle within the Class Maintenance Plan.[1] Drydocking will continue to occur at 7 year intervals with a major availability midway between drydockings. PHD NSWC will schedule the maintenance availabilities in conformance with the Test and Evaluation Schedule. Typical Maintenance Availability periods do not need to be scheduled as for a Navy ship because of the nature of SWTS' operating schedule. During period of prototype weapon system installation and removal, significant maintenance can be completed. The 3M system will be maintained for all systems supported by the system. Commercial systems will be maintained in a manner consistent with the 3M program.

Parts Support. The responsible Program Office will maintain prototype systems installed on SWTS. Many of the engineering systems are supported by the Navy Logistics System. This support will continue. Commercial systems will be supported through the manufacturer.

Intermediate Maintenance Support and Depot Level Repair. Port Hueneme lacks a local IMA. Intermediate Maintenance Support will be contracted through local shipyards. Depot Level repairs will be coordinated through the SURFPAC office in San Diego, CA.

Support Equipment. SWTS's crew will maintain the O'BRIEN's Repair Shop, Electrical Shop, and Micro-Miniature Repair Shop for use. Test Spaces and Special Projects Spaces are provided to support the Test Engineers. These spaces are identified in Section 7.2.

Human Systems Integration. Smart Ship technologies are used where possible to reduce the workload. TWARSES is the prime example. Civilian manning practices provide significant manpower savings for watchstanding.

Computers. COTS hardware is used wherever possible. Commercial software is used for all ship support operations. The cognizant Program Office supports hardware and software for payload Combat Systems and the CSRCS is supported by consistent with the systems installed for testing.

Other Logistics. SWTS shall be homeported in Port Hueneme, CA. A study of harbor dredging requirements must be performed. SWTS will use standard pier services in order to be docked at any port near a Test Range (such as Barking Sands, HI).

---

[1] OPNAVINST 4700.7J. Office of the Chief of Naval Operations. Washington DC. 04 Dec 92.

Chapter 14: *Manning*

SWTS manning will be that minimum required to effectively operate and maintain the ship. The crew size has been estimated based on PMS requirements, watchstanding requirements, and non-Navy damage control team requirements. Table 14-1 and Table 14-2 show the estimated HM&E and Combat System manning.

Position	*SWTS requirement*	*PHD proposal*	*SDTS requirement*
Master	1	1	1
Mates	2	2	2
Chief Engineer	1	1	1
Asst Engineers	3	N/A	N/A
Deck Crew	7	7	5
Electricians	2	5	1
GS Techs	6	4	0
IC Men/Ets	2	2	1
AC&R Techs	0	3	1
Machinist/Mechanics	9	8	8
Total	33	33	20

Table 14-1: HM&E Manning.

Position	*SWTS requirement*	*PHD proposal*	*SDTS requirement*
CS Supervisor	0	1	0
SPS-49A Rsc	2	2	2
SPQ-9B			
TAS MK-23	0	1	1
NSSMS	3	3	1
CIWS	1	1	1
RAM	1	1	1
AN/SLQ-32	1	1	1
SSDS + Comms	3	3	1
Video Surveillance	2	0	0
SPS-73	1	0	0
SPS-48	2	0	0
Total	16	13	8

Table 14-2: Combat Systems Manning.

14.1 Watch Structure

The watch structure is modeled on a traditional merchant ship organization. The civilian contract crew will man operating stations that must be manned for the proper or effective functioning of the ship. Table 14-3 shows the minimum watches required for underway operations. Special evolutions and testing will require this structure to be modified.

Watch	*Station*	*Qualification*
Mate (OOD)	Pilot House	USCG License
Helmsman	Pilot House	AB
Lookout	O4 Level	AB
CS Watch Officer	CIC	CS Crew
CS Rover	CS spaces	CS Crew
EOOW/PACC	CCS	USCG License
EPCC	CCS	GS Tech/EM
Space Supervisor	MMR	GS Tech
Space Operator	MMR	MM/GS Tech
Aux Operator	AMR 1&2	MM
Rover	Ship Wide	Engr Rate
Total	11	

Table 14-3: Underway Watch Organization.

14.2 Special Evolutions

14.2.1 **Flight Quarters.**

SWTS utilizes civilian-contract helicopters to transport personnel on and off the ship during test evolutions as described in Section 2.3 and Section 11.1. The inherent hazards associated with helicopter operations require the ships watch organization to be modified during these evolutions. A breakdown of these modifications in contained in Table 14-4.

Watch	*Station*	*Qualification*
Mate (OOD)	Pilot House	USCG License
Helmsman	Pilot House	AB
Lookout	O4 Level	AB
Hose Team(4)	**Port Wind Break**	**Deck Crew**
CS Watch Officer	CIC	CS Crew
CS Rover	CS spaces	CS Crew
Helo Contoller	**CIC**	**CS Crew**
EOOW/PACC	CCS	USCG License
EPCC	CCS	GS Tech/EM
Space Supervisor	MMR	GS Tech
Space Operator	MMR	MM/GS Tech
Aux Operator	AMR 1&2	MM
Rover	Ship Wide	Engr Rate
Total	16	

Table 14-4: Flight Quarters Watchbill.

14.2.2 **Launching the Barge**

The SWTS barge ramp system is described in Section 11.3. Table 14-5 shows the modified watch organization to support the launching and recovery of the barge.

Watch	*Station*	*Qualification*
Mate (OOD)	Pilot House	USCG License
Helmsman	Pilot House	AB
Lookout	O4 Level	AB
Deck Supervisor	**Fantail**	**Bosun/Mate**
Deck Crew(2)	**Fantail**	**AB**
CS Watch Officer	CIC	CS Crew
CS Rover	CS spaces	CS Crew
EOOW/PACC	CCS	USCG License
EPCC	CCS	GS Tech/EM
Space Supervisor	MMR	GS Tech
Space Operator	MMR	MM/GS Tech
Aux Operator	AMR 1&2	MM
Winch Operator	**Winch Room**	**MM**
Rover	Ship Wide	Engr Rate
Total	15	

Table 14-5: Barge Operations Watchbill.

14.2.3 **Small Boat Operations**

The SWTS will launch and recover its small boat utilizing the starboard side crane as described in Section 11.4. Table 14-6 shows the modified watch organization to support the launching and recovery of the small boat.

Watch	*Station*	*Qualification*
Mate (OOD)	Pilot House	USCG License
Helmsman	Pilot House	AB
Lookout	O4 Level	AB
Deck Supervisor	**Boat Deck**	**Bosun/Mate**
Deck Crew(2)	**Boat Deck**	**AB**
Crane Operator	**Boat Deck**	**AB**
Boat Crew(2)	**Boat**	**Coxswain/MM**
CS Watch Officer	CIC	CS Crew
CS Rover	CS spaces	CS Crew
EOOW/PACC	CCS	USCG License
EPCC	CCS	GS Tech/EM
Space Supervisor	MMR	GS Tech
Space Operator	MMR	MM/GS Tech
Aux Operator	AMR 1&2	MM
Rover	Ship Wide	Engr Rate
Total	16	

Table 14-6: Small Boat Operations

Chapter 15: *Options*

The cost and performance of the Surface Warfare Test Ship can be easily modified through four modular changes. These options are presented in this Chapter with supporting information to aid in deciding which options to implement. The Enclosed Accommodation Ladder and Barge Ramp are modular improvements to the SWTS and may be deleted if desired by the customer. The standard methods of personnel transfer and decoy barge towing will be presented in Sections 15.4 and 15.3 with the impact on cost, RCS, and safety. Similarly, the AEM/S masts are modular improvements and preliminary installation concepts for the AEM/S installation are provided in Section 15.1. Finally, substantial RCS reduction may be achieved through the reduction of the bridge and helicopter hanger wings. The costs and effects of this modification will be presented in Section 15.2.

15.1 AEM/S

The Advanced Enclosed Mast/Sensor System is a mast structure housing legacy radar and communications antennas behind low-RCS panels featuring Frequency Selective Surfaces (FSS). The initial model, containing an SPS-40 radar and a TAS radar is continuing prototype testing aboard another DD 963 class ship, USS ARTHUR W. RADFORD (DD 968). A modified version of AEM/S is under primary consideration for incorporation in LPD-17, housing all the radars and most of the comms antennas. Additional advances of the AEM/S are:

a) antennas protected from the weather
b) maintenance done out of the weather
c) lighter weight than current lattice masts

Two configurations are recommended:

1) Transfer testing of the RADFORD hexagonal AEM/S mast to the aft mast position of SWTS, housing the SPS-48E and SPQ-9B radars. On the forward mast position, mount a prototype of the LPD 17 octagonal AEM/S mast housing the SPS-49 and SPS-73 radars. Comms antennas would be located as required. Further analysis of mast stepping (structural support) and radar arrangement viability is required (see Section 17.3).

2) Mount two LPD-17 octagonal AEM/S masts with the same radar arrangement as LPD-17. This would have the advantage of closely duplicating the LPD-17 version of SSDS Mk2 system to be initially tested aboard SWTS.

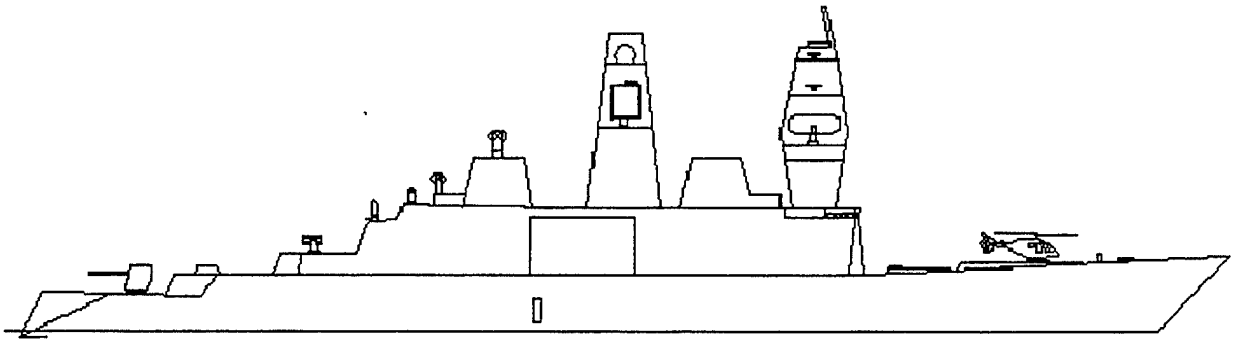

Figure 15-1: SWTS with AEM/S.

Alternative D (Section 6.5) illustrates the recommended location and arrangement of sensors using AEM/S masts. Figure 15-1 gives an artists rendering of the SWTS topside with AEM/S masts mounted as in configuration (1) from above.

15.2 Bridge Wing Reduction

One option for further RCS reduction that is not incorporated in our original plan is to reduce the size of the bridge wings and eliminate the windbreaks. By removing the windbreaks, large trihedrals are eliminated from the superstructure. The reduction of the bridge wing size will minimize the RCS contribution for that area of the superstructure.

During our initial analysis of the design, we determined that the RCS reduction would not sufficiently justify the added cost to redesign this section of the ship.

15.3 Standard Towing Operation

The barge ramp is designed to eliminate tug services for the target barge. If this option is not desired, the STWS will need to adopt a different towing procedure. This procedure will be identical to the current STDS procedure.

The SWTS will get underway early in the morning and transit to San Nicholas Island (SNI). Once the ship is in the SNI vicinity, it will anchor. A tug will bring the target barge to the ship at anchor and the crew will run the towing hawser through the stern chock and attach it to a set of bits. The tow length will remain the same trough out the test. After the test is completed the SWTS will return to anchor near SNI and transfer the barge back to the tug.

15.4 Standard Personnel Transfer

In lieu of the AEL concept, personnel safety and RCS reduction may still be preserved through the use of a modified accommodation ladder and standard pilot ladder.
The disadvantage of this concept is the typical time and manpower required for accommodation ladder setup/takedown and the possibility of damage to the ladder from boats and high seas.

The standard Navy accommodation ladder is modified with RAM panels on the underside to present an insignificant RCS when stowed. It is located in the current accom ladder position beneath the helo hanger overhang, on the stbd side 01 level. Primarily used for anchored and protected water personnel transfer, it can be used as a gangway inport if required.

For at-sea personnel transfer, a standard pilot ladder is be rigged over the side from the 01 level amidships. The large displacement of the DD-963 class typically provides of good lee in normal Southern California sea states. Pilot ladders can be precarious and baggage and equipment must be roped up/down to transfer boats when underway, a less than ideal method.

Chapter 16: *Cost*

A rough order of magnitude (ROM) cost estimate was done to estimate the conversion cost of the USS O'BRIEN to the SWTS. Information was pulled from two different sources. The first source was Program Executive Office Theater Surface Combatant (PEO TSC). PEO TSC was able to consolidate cost estimates for proposed work from several different locations, such as Ingalls Shipyard and the VLS Program Office. The second source of cost data was obtained from the class "F" estimate done for Port Hueneme.[1]

The cost data in Table 16-1 is provided in three different formats depending on the source. The information was either given in a total cost, installation and material costs or installation, material and labor costs. All money values are given in 1999-dollar estimates. At the bottom of the table, an estimate to add Advanced Enclosed Mast System is included.

The barge ramp and the enclosed accommodation ladder add significantly to the acquisition cost of the SWTS. However, these innovations provide substantial benefits. The barge ramp eliminates the need for tug services and the enclosed accommodation ladder adds to safety of personnel transfer reducing the number of tests that may be cancelled due to weather.

Item	Total Cost	Installation Cost	Material Cost	Man Days	Labor Cost	Additional Costs
CIWS Enclosure Cost		1000	105			
Torpedo Room Removal		950	38	750	300	
SPQ-9 Relocation		110	35	1400	560	36
Mk 29 NSSM Launcher Removal		23	1.2	110	44	
Install 2nd NSSM Director		105	23	412	164.8	
OE-82 Relocation		100	7.5	261	104.4	
Mk-41 VLS Conversion	300					
TACTAS/NIXIE Removal	390					
SPS-49 Installation		450	300			
RAM Coating Installation		3000	3000			
5"/54 Gun Removal	15					
SPS-48 Procurement & Installation		450	14200			
CIWS Blk 1B and Camera Mount	170					
RAM Blk 1	118					
C/S Remote Control System	600					
HM&E Costs						
Boat Deck Bulkhead		100	15	500	200	
Sloped Bulkhead Installation		203	27	649	259.6	
Berthing Conversion	250					
Boat Davit Removal/Crane Install		86	3.5	205	82	
Steam to Electric Conversion	1500					
Ship Remote Control System	500					
TWARSES Installation	50					
Inspect, Groom, Repair and Structural Modifications	350					
Barge Ramp Installation		200	75	1000	400	
Enclosed Accommodation Ladder Installation		200	30	750	300	
Total Mandays (Manday = $400)				6037		
Subtotals	**4,247**	**6,122**	**17,860.2**		**2,414.8**	**36**
TOTAL	**30,576**					
Additional Items						
AEMS		2400	3000			

Table 16-1: Conversion Cost of USS O'BRIEN ($K).

16.1 Methods to Leverage Cost

The cost of the SWTS has been measured in conversion and annual dollars. The SWTS leverages costs to the Navy in many ways:

New systems are tested on SWTS. In the past, these tests have been performed on commissioned warships. This required the ships to be taken off line for systems installation, testing, and removal. Downsizing the fleet has increased the OPTEMPO of the remaining fleet units. Using the SWTS for testing eliminates this requirement for fleet units. This allows fleet units to remain on the line, prevents commissioned ships from putting to sea for a test that does not benefit the crew, and allows sailors to focus upon their mission and their families.

The primary mission of SWTS is to test self defense weapon systems. The secondary mission is to test other systems of interest to the Navy. These systems are tested on a not to interfere basis with weapon systems tests. By installing these systems on an decommissioned ship, the engineers have a dedicated platform with a non-volatile schedule to use for testing. By including several offices in the SWTS, the costs can be distributed among each of the offices. A list of possible systems and tests is given below.

- HM&E Test engineroom.
- AEM/S. (DD 963 and LPD 17 versions)
- RAM paneling.
- New UNREP equipment systems.
- Enclosed Accommodation Ladder.
- Smart Ship Technologies.
- Reverse Osmosis Units.
- Tomahawk/Fasthawk

These systems do not impact the primary mission of the ship, and SWTS provides a platform for testing the seaworthiness of new technologies, equipment, and systems. The tests can include studies of Radar Cross Section impacts, corrosion resistance, reliability, and suitability for naval use.

---

[1] Appendix B

Chapter 17: *Conclusions*

The Surface Warfare Test Ship is a robust Test and Evaluation platform. It provides improvements over the ex-DECATUR in payload capacity, propulsion, and signature reduction. It meets or exceeds all requirements set forth in the ORD as described in Section 17.1. The moderate conversion cost, savings in fleet operational time, and existing In-Service Engineering support make SWTS a cost-effective acquisition.

17.1 **Requirements Review**

The ORD requirements are satisfied by this design. The specific requirement line items are addressed in this section.

4.a.1: The hull corrosion experienced on the ex-DECATUR significantly reduced the service life. The installed corrosion suppression system on O'BRIEN is retained to eliminate this problem. Additionally, the O'BRIEN is turned over in an operational state vice the inactive state of ex-DECATUR.

4.a.2: O'BRIEN is capable of 17 knots at trail shaft. The stores, water, and fuel are all sufficient for 12 days of operation.

4.a.3: The stability of O'BRIEN is sufficient to operate in Sea State 8.

4.a.4: The Ship's Remote Control Systems, TWARSES, and Combat System Remote Control System are capable of operating the ship indefinitely. The time limitation is imposed by the capacity of the fuel oil service tanks, which provide 4 hours of continuous operation at 17 knots.

4.a.5: The ship maintains required lights, radars, and sound signals.

4.a.6: Video recording is provided for all control consoles and weapon systems. Channels are selectable by operators ashore.

4.a.7: Data Collection Rooms and topside locations for installation of special test equipment are provided.

4.a.8: Topside space and internal payload volumes are identified for future growth that can be used for temporary system installation.

4.a.9: To support the testing of these systems, sufficient deckspace, internal volume, pressurized air, and cooling medium are provided. SWTS can accommodate these systems.

4.a.10: SWTS is designed for the initial installation of SSDS Mk 2 Mod 2. The missile deck remains available for additional combat systems installation. Other spaces have been reserved for additional weapons systems. Section 9 demonstrates that sufficient power exists for additional systems.

4.a.11: The O'BRIEN's two WRN-5 gyros are retained for position reference.

4.a.12: The Enclosed Accommodation Ladder provides safe boat transfer capability.

4.a.13: The Forward Flight Deck is designed to operate Jet Ranger and Long Ranger helicopters. Further study is required in the area of wind envelopes and deck motion.

4.a.14: The starboard boat deck has a telescoping crane for ship's boat operations. This is described in Section 11.4.

4.a.15: The Barge Ramp provides independent Decoy Barge operations.

4.a.16: The Radar Cross Section is 68% of ex-DECATUR.

4.a.17: The berthing capacity is 162 personnel. Stores capacity exceeds 12 days for 150 personnel.

4.a.18: The former CPO Berthing is designated as Female Berthing. It berths 14 personnel.

4.a.19: The manning plan requires 46 personnel.

4.a.20: TWARSES monitors all spaces on the ship. The Ship's Remote Control System can remotely activate fire suppression systems.

4.a.21: The Ship's Remote Control System has a "Kill Switch." This secures the GTGs and removes power from the ship. Leaving the SWTS Dead in the Water.

4.a.22: The ship has slightly improved stability compared to the DD 963 Class.

4.a.23: The O'BRIEN's cathodic protection is maintained.

4.a.24: Port Hueneme has berthed CG 47 Class ships; therefore, it is capable of berthing the SWTS.

4.a.25: The Steam to Electric conversion is completed as described in Section 9.6 .

4.a.26: The aft engineroom is designated as the Test Engineroom.

17.2 Design Analysis

The Design Team worked cohesively and efficiently to develop an effective conceptual design. Although the hull of the O'BRIEN confined the design, the final design incorporated many innovative ideas. The design team was small, five officers. Each had diverse talents and experience, and the team proactively accepted responsibility to complete the individual design components. The common workspace allowed free communication between people working on different aspects of the design.

The Design Team divided the labor naturally to match its talents. Volunteerism ensured no task was ignored. The initial timeline for the design was modified as necessary to fit the changing needs of the design. The identification of deadlines maintained the progress of the design. The Sequential Thematic Organization of Publications (STOP) was an invaluable tool used to identify areas of research as well as the scope of work within each aspect of the design. The easy visual communicability of STOP kept all design team members informed of the current status of the project. AUTOCAD was the workhorse software of the design. It was used to generate external arrangements of the ship as well as deckplans. These visual representations of the ship allowed easy reference throughout the design process. Other software (ASSET and Microsoft Project) was used for specialized and limited contributions. ASSET was used to analyze the stability of the design. A program specifically designed to analyze stability, such as POSSE, would have been a better choice. The customer, PHD NSWC, was a proactive participant in the design process. The Mission Needs Statement is six pages long. The customer allowed the design to mature rapidly by answering many questions, not addressed in the MNS, quickly and succinctly. The design team required outside assistance in many areas of the design. Contacts at NAWC (Point Mugu), SURFPAC, NAVSEA, PEO TSC and NSWC Carderock Division were invaluable in providing timely information.

The design was a learning process, but not everything went smoothly. Several software applications would have been helpful and were not available. These include a Ray Tracing Algorithm for RCS evaluation and a Functional Flow Diagram construction application. The Design Team had significant interaction with the customer; however, it had no prior interaction with the reviewers who came to the Capstone Design Presentation. Many of the questions asked and suggestions made at this review could have easily been investigated and addressed if a mid-

point review had occurred. A much better design would have been developed if the team understood which questions to ask.

On an individual basis, the small design group interacted frequently; however, in the planning process more group interaction, interfaces, should have occurred. These interfaces are planning events that impacted multiple aspects of the ship. This was done for the internal arrangements, but should also have been completed for the external arrangements, shaping/RCS reduction and the Cost elements of the design.

For future Design Teams, the STOP procedure was invaluable in the conceptual design. It identified the work, divided the labor, and formatted the report. This Design Team allowed the report to guide the research and uncover the weak areas of the report. The STOP process also provided a work breakdown with easily identifiable deadlines. Many outside agencies were contacted for information. A library of the communications should be maintained in the TSSE design room, available for all to access. Because many of these communications are via e-mail, this is a simple (but important) task. Finally, start the report early. The beginning of the last quarter is a good time to begin. The structure of the report helps define work and roles. Major decisions should be made as early as practicable: the layout of the ship is important to all components of the project and is an obvious interface point. Finally, a spirit of volunteerism permeated this design, and as the design uncovered new work, the tasks were embraced and completed.

17.3 Areas for Further Research

A Detail Design will refine many aspects of the SWTS. These areas are incomplete because of the limited time and manpower available for this study. The areas that specifically require further study include:

- Operational Costs. The conversion costs have been studied; however, the annual operating costs must be refined. The barge ramp and steam to electric conversion were specifically included to reduce operating costs.
- RCS Study. A more detailed study of the RCS must be conducted using computer models to determine the actual impact of RCS reduction efforts on the SWTS RCS. The Radar Cross Section analysis uses a comparison and similarity method. It provides a rough order of magnitude estimation. The design team constructed an AUTOCAD model of the SWTS, which can be used to perform a detailed RCS analysis using a ray tracing software package. This software was not available to the design team
- Electromagnetic Interference Study. A detailed analysis of the locations of the antennas and sensors must be conducted to ensure that no EMI conflicts are present.
- Long Term Maintenance Plan. A long-term maintenance plan must be provided to properly prepare for the major maintenance availabilities and the impact on the SWTS testing schedule.
- Forward Flight Deck. A study must determine the allowable pitch, roll, and wind parameters acceptable for flight operations for the forecastle location.
- Effects of the Barge Ramp on Ship Survivability. The effects of the Barge Ramp on reserve buoyancy have not been studied. This is a potentially significant reduction in the survivability of the SWTS.
- Transverse Stability Effects of the Aft Weapons Platform. Although the heel induced by the aft weapons platform is probably small, an analysis of this effect must be performed.

Appendix A

List of Acronyms

AB	Able Seaman (civilian mariner)
AEM/S	Advanced Enclosed Mast/Sensor
AMR	Auxiliary Machinery Room
AOA	Analysis of Alternatives
ASCM	Anti-Ship Cruise Missile
CAN	Controller Area Network
CCS	Central Control Station
CEC	Cooperative Engagement Capability
CIC	Combat Information Center
CIWS	Close In Weapon System
COTS	Commercial Off the Shelf
CPA	Closest Point of Approach
CS	Combat Systems
CSRCS	Combat System Remote Control System
DCC	Damage Control Console
DCR	Data Collection Rooms
DCRS	Damage Control Repair Station
DF	Directivity Factor
EAL	Enclosed Accommodation Ladder
ECSS	Engineering Control and Surveillance System
EM	Electricians Mate
EOOW	Engineering Officer of the Watch
EPCC	Electric Plant Control Console
ESSM	Evolved Sea Sparrow System
FFD	Functional Flow Diagram
FOV	Fields of View
GS	Gas Turbine Systems Technician
GTG	Gas Turbine Generator
GTM	Gas Turbine Module
HM&E	Hull, Mechanical and Electrical
ILS	Integrated Logistics System

ITCS	Integrated Target Control System
IMA	Intermediate Maintenance Activity
MER	Main Engineroom
MM	Machinists Mate
MNS	Mission Needs Statement
MOP	Measures of Performance
NAS	Naval Air Station
NAWC	Naval Air Warfare Center
NSSMS	NATO Sea Sparrow Missile System
OOD	Officer of the Deck
ORD	Operational Requirements Document
PACC	Propulsion and Auxiliaries Control Console
PCMS	Passive Counter Measure System
PHD NSWC	Port Hueneme (CA) Division, Naval Surface Warfare Center
PMS	Preventive Maintenance System
PMTR	Pacific Missile Test Range
RAM	Rolling Airframe Missile, or
RAM	Radar Absorbing Material
RAST	Recover, Assist, Secure and Traverse
RCS	Radar Cross Section
RNSSMS	Rearchitectured NATO Sea Sparrow Missile System
RO	Reverse Osmosis
SCIF	Sensitive Compartmentalized Information Facility
SDTS	Self Defense Test Ship
SNI	San Nicolas Island
SRCC	Ship's Remote Control Console
SRCS	Ship's Remote Control System
SSDS	Ship Self Defense System
SWEF	Surface Warfare Engineering Facility
SWTS	Surface Warfare Test Ship
TAS	Target Acquisition System

T&E	Test and Evaluation
TWARSES	Two Wire Automatic Remote Sensing Evaluation System
VLS	Vertical Launch System

Appendix B

SDTS Replacement
White Paper prepared
By
Port Hueneme Division
Of
Naval Surface Warfare Center (NSWC)

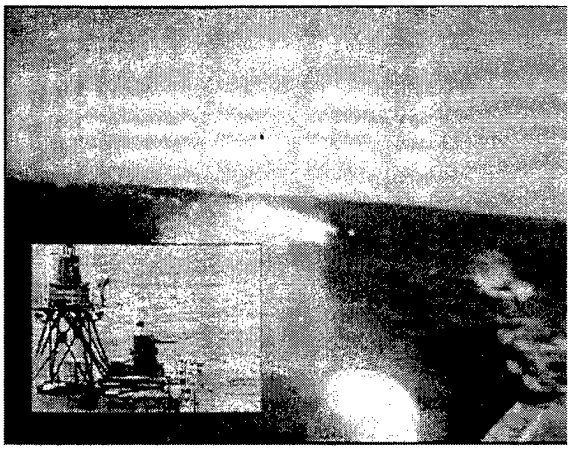

SDTS Replacement

At-Sea Live Fire
Surface Warfare Test and Evaluation Platform
For the 21st Century

Options Paper

Prepared by _____

PHD NSWC

January, 99

Abstract

This paper will discuss the alternatives for replacing the current Self Defense Test Ship (SDTS) (EDDG 31) with a newer class ship. These alternatives are intended to maintain an at-sea live fire weapons effectiveness test asset at Port Hueneme Division, Naval Surface Warfare Center (PHD NSWC) and to provide an enhanced capability to support a broader range of surface warfare test and evaluation projects.

This discussion will compare DD 963, FFG 7, and LST 1179 Class replacements for the SDTS and the manning requirements and costs associated with operating and maintaining each of these ship classes at PHD NSWC.

Executive Summary

This paper discusses the history of previous test ships and illuminates the mission and vital role the SDTS has played in safely testing and demonstrating the performance of Ship Defense systems. The SDTS allows close-in live fire testing in a shipboard environment with no risk to personnel and minimum risk to ship and equipment. Although projected for a 15 year operating test life, ex-DECATUR is over 42 years old. Now, after only 5 years of operation, deterioration of its hull and fuel tank system has placed the ship's continued seaworthiness in question and major repairs are required to ensure continued safe operation.

Because of force reductions, a number of newer ships are scheduled (or are being considered) for decommissioning. Some MK 92 MOD 2 FFGs have already been retired and one more is scheduled for FY 99. A number of DD 963 Class ships have also been decommissioned with additional decommissionings scheduled over the next few years. Mothballed LST 1179 class ships may be made available as candidates for SDTS replacement platforms.

If placed into service soon, a newer vessel would provide a long term solution to the cost of repairing the SDTS and the requirement for a dedicated, remote controlled test ship. The report summarizes the potential capabilities of each option, the estimated (Class F) cost for conversion, manning, operation and maintenance of each option and a rough cost estimate for supporting major combat systems anticipated for installation. Final determination of configuration and cost of these systems will be determined when the specific systems intended for T&E support are established.

	SDTS	DD 963	FFG 7	LST 1179
MANNING				
HM&E MANNING	20	33	21	25
CS MANNING	5	13	11	12
CONVERSION COSTS ($K)				
HM&E CONVERSION		2900	1700	3020
CS CONVERSION		3069	4070	9165
TOTAL CONVERSION COSTS		5969	5770	12185
ANNUAL O&M COSTS ($K)				
HM&E (FIXED ANNUAL)		3894	2869	3164
CS FIXED ANNUAL		TBD	TBD	TBD
TOTAL ANNUAL O&M COSTS		3894+TBD	2869+TBD	3164+TBD

The FFG 7 class platform represents an approximate one-for-one replacement for the SDTS at moderate increase in cost with only nominal gains in support capability. The DD 963 class platform, while more costly to convert and operate than the FFG 7 class platform, provides a considerable increase in support capability, flexibility, and versatility. The LST 1179 class platform would be cost prohibitive to convert due to the absence of installed combat systems. This ship class would not meet CFR 46 subchapter S, section 170 requirements for stability after completion of required major ship structural modifications to support combat systems elements, thus would not meet minimum support capability requirements.

Strongly recommend:

- Selecting a DD 963 class ship to replace SDTS to provide the most versatile test platform.
- Obtain agreement for maintenance and life cycle support of systems from each of the system managers represented.

- Establish a target date for standup of the new test ship of 1 OCT 2001 or not later than 1 OCT 2002 (with a 6-9 month transition time to allow orderly completion of ongoing test requirements and transfer of selected combat system equipment).

SDTS Replacement:

At-Sea Live Fire Surface Warfare Test and Evaluation Platform For the 21st Century

Background

History

Historically, the U. S. Navy has recognized a need for dedicated at-sea test and evaluation (T&E) platforms to bring its warfare systems from the drawing boards of research and development labs to the fleet ships and sailors who employ them in support of the Navy s mission. Battleship USS MISSISSIPPI was used as a test and development platform for Project Bumblebee, which ultimately lead to the Navy s Three Ts – missile systems Talos, Terrier, and Tartar. Destroyers USS BRONSTEIN, USS McCLOY, and USS GLOVER were used in the development of the SQS-26 sonar system. During the 1950s and 1960s, USS TIMMERMAN (EDD 828) was used as a dedicated, full-time T&E asset in support of various weapon system T&E projects. During the 1960s through the 1980s, USS NORTON SOUND (AVM 1) played a vital role as a dedicated T&E asset in developing weapons systems, including Regulus II, the Aegis Weapon System, the MK 26 Guided Missile Launching System (GMLS), and the MK 41 Vertical Launching System (VLS). More recently, ex-USS STODDARD (DD 445) was employed on a dedicated basis in support of the development and testing of the Vulcan Phalanx Close In Weapon System (CIWS). With the exception of ex-STODDARD, which was a government-owned, contractor-operated T&E asset, all other platforms mentioned above were commissioned Navy ships with Navy crews.

In 1987, two anti-ship missiles fired from Iraqi aircraft struck USS STARK, FFG 31. The ship was severely damaged and 37 lives were lost. As a result of this tragic event, the effectiveness of short-range ship defense weapons was called into question. The Navy established a requirement to more rigorously test short-range AAW systems against realistic threats to help ensure their effectiveness and prevent a similar incident from damaging ships and claiming lives in the future. After assessing various options, it was decided that a remotely operated decommissioned combatant hosting a variety of AAW systems would be used for this purpose. Shortly thereafter, in early 1988, the Office of the Secretary of Defense developed a plan to convert ex-USS DECATUR (DDG 31) into the Self Defense Test Ship (SDTS). In April 1988, Chief of Naval Operations authorized transferring ex-USS DECATUR to Commander Naval Sea Systems Command (SEA-05R) and SDTS conversion planning commenced.

Ex-USS DECATUR as Self Defense Test Ship

In 1992, ex-USS DECATUR was taken out of mothballs and began a 2-year conversion process to join the line of distinguished predecessors as a dedicated AAW weapon systems T&E platform in support of ship self defense weapons testing. Originally commissioned in 1956 and decommissioned in 1983, the ship spent 27 years in active fleet service and another nine years in mothballs before conversion and assuming its present status as the Navy s Self Defense Test Ship. The SDTS has been operational in support of various T&E projects since October 1994.

The primary mission of the SDTS, with its Combat System Remote Control System and Ship Remote Control System, is to test and evaluate ship self defense sensor and weapon systems performance

against real world threats. Safety constraints, including a 2.5 nautical mile (nm) closest point of approach restriction on commissioned ships, makes realistic performance testing of ship defense systems impossible in commissioned warships without serious risk to both ship and personnel. The unique capabilities of the SDTS allows realistic engagement and live-fire test and evaluation of ship self defense sensor and weapons systems without endangering commissioned warships or personnel.

Since becoming operational in 1994 as SDTS, the ship has proven itself to be a versatile, cost-effective at-sea T&E asset in supporting its primary mission of ship self defense weapon systems testing. SDTS has supported T&E of the NATO Seasparrow Surface Missile System (NSSMS) RIM 7P/7R and the CIWS Blocks 1A and 1B systems. Currently, Rolling Airframe Missile (RAM) Block 1 system and Ship Self Defense System (SSDS) are undergoing developmental and operational testing in the SDTS. Upon completion of the RAM/SSDS tests (early 1999), the High Frequency Surface Wave Radar (HFSWR) system will undergo developmental testing, followed by Rearchitectured NSSMS (RNSSMS) and SSDS/RNSSMS integration evaluations.

In addition to its primary mission area, however, SDTS has proven a valuable asset in the developmental and operational testing of several other sensor, tracking, and engagement systems and support elements. These systems include the Infrared Sensor System (IRSS), Radiant Mist Infrared Sensor and Tracking System (IRST), Thermal Imaging Sensor System (TISS), and the SPQ-9B Gun Fire Control Radar, and installation of Fiber Optic using advanced technology Air Blown Fiber (ABF) installation technique. Further support assisted preliminary studies of follow on developmental testing of the High Frequency Surface Wave Radar (HFSWR).

Future SDTS T&E events include developmental and operational testing of the Evolved Sea Sparrow Missile (ESSM), and further testing of the SPQ-9B. The SDTS has shown it can successfully and cost-effectively support T&E missions broader in scope than mere self defense weapon systems testing.

MAJOR TEST EVENTS

CIWS

CIWS testing began in July 1995 with threat seeker captive carry tests. To date, three different CIWS mounts have been installed and tested onboard the ship. The same personnel, at the same port, and using the same equipment performed these installations. Likewise, each at-sea test period has been accomplished with the same crew and same Range Control personnel.

Seven unmanned live fire tests have been conducted. Developmental testing of the CIWS Block 1B in surface mode was so successful that the operational testing phase was cancelled. To achieve such continuity with a fleet unit would require removing the ship from the fleet deployment cycle.

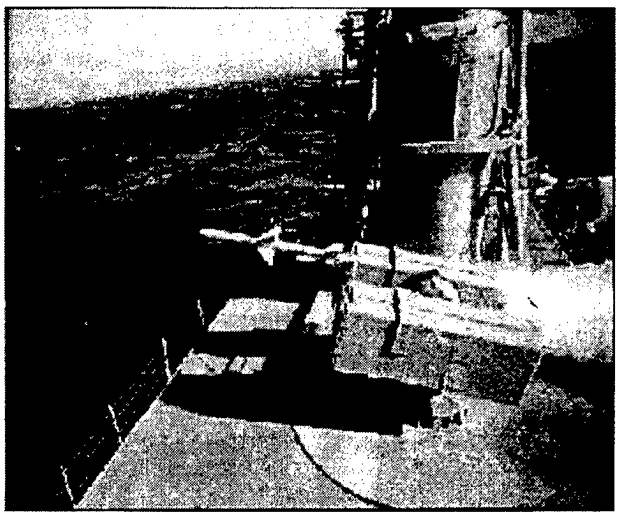

NSSMS - RIM 7R vs. MQM-8G Target

This test firing was originally scheduled on a fleet unit. When the designated unit became unavailable, the SDTS was selected for the exercise based upon availability, the permanently installed NATO Seasparrow Surface Missile System, and the ship's proximity to the Pacific Missile Test Range.

The supersonic target (MQM-8G) used in the RIM 7R test is so scarce that it is never available solely for tracking exercises. To use this opportunity, another project, the AN/SPQ-9(B) radar, postponed deinstallation from the SDTS in order to observe the supersonic target used in the NSSMS exercise. In this case, the missile program was able to achieve its goals in spite of the fleet unit's unavailability and the radar project was able to obtain tracking data on an otherwise unavailable high performance target.

Thermal Imaging Sensor System (TISS)

Operational testing of this system was conducted during nine consecutive days at sea prior to the decision for procurement. Test targets were fixed- and rotary-winged aircraft, rigid hull inflatable boats, a high speed Boghammar gunboat, swimmers, and inert floating mines. Targets were presented with open ocean and land mass background.

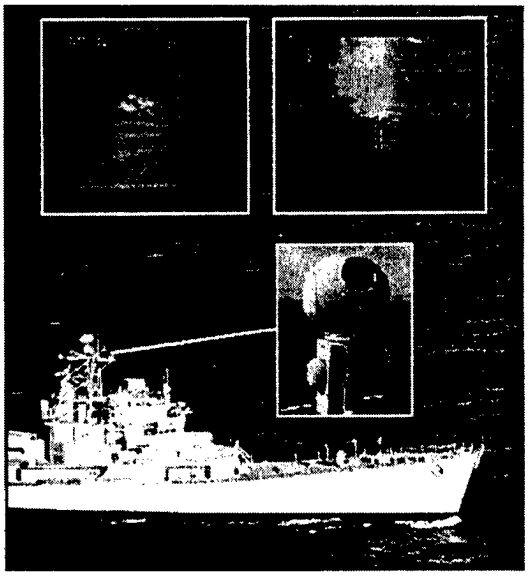

To accomplish TISS goals, the SDTS crew laid and recovered six mine fields, launched and recovered 10 swimmer and small boat attacks, and twice refueled the Boghammar gunboat at sea while TISS project personnel coordinated over 140 detection and tracking runs.

U.S. Navy personnel from USS TICONDEROGA (CG 47) also embarked to learn TISS operation and maintenance prior to the first fleet installation.

We estimate that this testing would have taken at least three months to accomplish on a fleet unit.

CSRCS
RAM FIRING

SSDS / RAM Blk I

RAM Block 1 system and SSDS are undergoing developmental and operational testing on the SDTS. These systems are being tested against real world targets and surrogate threats such as the HARPOON, MM-38, and VANDAL MQM-8G missiles. Target scenarios include subsonic sea-skimmers, supersonic low altitude ASCM, high divers, and stream and wave attack multi-target scenarios.

MISSILE/ TARGET
RAM FIRING

AGE, STEEL, AND SALT WATER: Facts in the Life of a Ship

When the decision was made to convert ex-DECATUR, SDTS was intended to support self defense weapon systems T&E for approximately 10 - 15 years. However, the ship is now over 42 years old and only four years into its planned T&E life cycle. Recent ultrasound surveys and visual inspections indicate the hull is deteriorating at a rate that raises serious concerns about the ability of the SDTS to safely and cost effectively support a 15 year mission life cycle.

Hull corrosion from the inside out, documented by Puget Sound Naval Shipyard in 1992, has continued. Data from a recent thin hull survey shows that 30-40% of the ship s hull below the water line has lost 50% of its original design thickness. The ship s Cathodic Protection System was deactivated during conversion. Its only protection against hull deterioration is an external zinc anode system, incapable of providing adequate protection for the hull s interior. The degree of hull corrosion to date, and the rate at which it continues to deteriorate, raises serious concerns about the ability of SDTS to support future T&E operations without major expense to repair the affected areas of the hull.

In addition, a seam in the ship s largest fuel tank, 5-149-0-F, was recently discovered to have been seeping into a ship s storeroom and required repair. All SDTS fuel tanks have some degree of algae present and require continuous treatment to prevent fouling of the main engines and generators. The ship s tank system was not properly reactivated and has not been adequately addressed in subsequent maintenance periods. As a result, further tank problems can be anticipated. While operations can continue in the short-term, without incurring major expense to drain, clean, inspect, repair and properly preserve each SDTS fuel tank, future operations could be impacted due to major tank leaks and fuel system fouling.

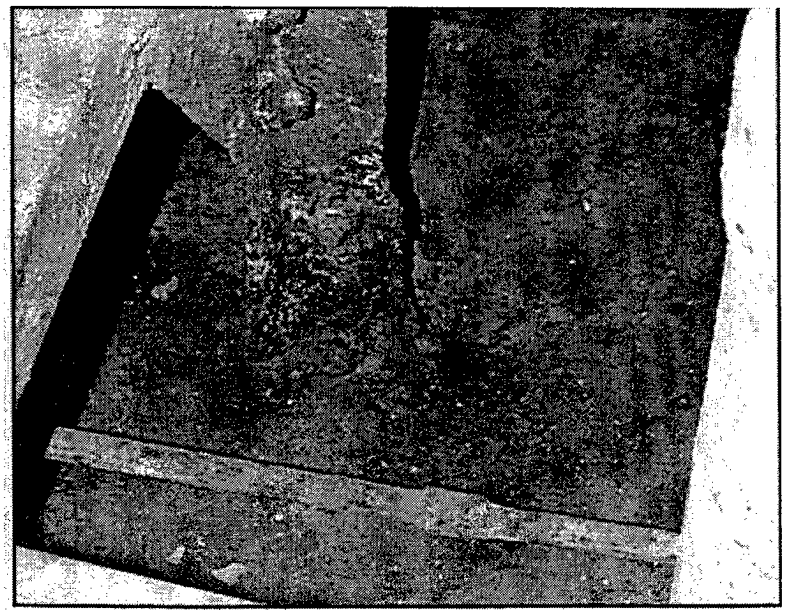

The problems developing in the SDTS and will grow worse over time. Unless these problems are

corrected, deterioration of the ship s hull and tank system will continue at an accelerated rate. At best, these problems will impact the ship s ability to support future operations. At worst, a major hull or tank breach could result in a catastrophic event causing damage to the local marine ecosystem and/or loss of life. The corrosion problems present in the SDTS will increase exponentially over time, resulting in substantial ongoing operation and maintenance cost impact, both short and long-term.

The degree and rate of hull system deterioration raises serious concerns about the continued safe operation of the current SDTS and its ability to support its intended 10-15 year T&E mission. Additionally, questions are raised about the cost-efficacy of addressing and satisfactorily resolving the ship deterioration problems in order to avoid delays or cancellations of T&E events, or worse, a catastrophic failure in the future, and the costs associated with those contingencies. Accordingly, this study is being undertaken to explore the possibility of replacing the SDTS with a newer ship class in which hull systems deterioration will not be a factor in safely and effectively supporting a long-term T&E mission. While replacement is expected to have a considerable front-end conversion cost and an increased ownership cost (operation and maintenance), a newer, more capable platform will provide the Navy with substantial advantages and benefits over trying to maintain the SDTS.

Over the long-term, a replacement platform for the SDTS can reduce the time systems now spend in developmental and operational testing, can speed fleet introduction of improved systems, and would decrease overall associated costs of bringing systems improvements to the fleet. Such a replacement platform would be more capable of supporting a broad customer base and of being employed in mission areas much greater in scope than just T&E of self defense weapons systems.

THE FUTURE: Surface Warfare Test Ship

Several newer ship classes suitable for the mission of surface warfare T&E are being decommissioned and deactivated. Replacing the SDTS with one of these newer, more capable, platforms has several advantages over band-aiding the existing SDTS.

- Many of these ships are being deactivated with nearly half of their design service life remaining and do not require restoration or major repair of their hull and fuel tank systems to ensure the continued safe operation and effective support of future T&E projects.
- Replacement of the SDTS with one of these platforms allows for considerable mission expansion. A greater variety of other weapons and sensor systems, command and control systems, and engineering and environmental systems would be available to the research, development, test and evaluation (RDT&E) and in-service engineering (ISE) communities.
- Using a dedicated, highly capable platform will reduce dependence on the fleet and ease the burden on type commanders to provide ships and fleet personnel to support RDT&E and ISE efforts and eliminate many of the costs associated with using fleet assets to support such efforts.
- A newer platform is capable of supporting many systems still in service in the U. S. Navy, as well as many systems installed in ships of foreign navies. Accordingly, the test ship's traditional U. S. Navy customer base could be expanded.
- A new platform can also be employed in support of Foreign Military Sales (FMS) programs, further expanding the customer base.
- In addition to legacy system support, a replacement ship affords the Navy a dedicated platform capable of supporting a broad range of surface warfare developmental and operational testing of major combat/weapon system upgrades and new systems planned for fleet introduction.
- A test ship replacement can also support development and testing of improved Hull, Mechanical

and Electrical (HM&E) systems and the DD 21 reduced manning efforts.
- An SDTS replacement could be quickly recommissioned in time of national emergency, if necessary.

Depending upon the platform chosen to replace SDTS, direct fleet support in the areas of fleet exercise participation and Battle Group Interoperability testing and training can be enhanced. The decision to replace SDTS with one of these newer platforms would ensure the support of RDT&E, ISE, and other vital projects well into the future and would be an investment that will pay dividends to the Navy far in excess of costs.

The balance of this paper will discuss comparative SDTS replacement alternatives and the costs associated with converting, manning, operating and maintaining DD 963, FFG 7, and LST 1179 Class ships as candidates to become the Navy s Surface Warfare Test Ship of the future. The following factors and issues will be addressed for purposes of comparison:

- Platform Options
- Class General Characteristics
- Installed Combat Systems
- Test Project Applicability
- Replacement option pros and cons
- HM&E and Combat Systems Manning Comparisons
- Conversion, Operation and Maintenance, and User Costs
- Implementation, Location and Benefits
- Conclusion and Recommendations

Platform Options

Platform options considered in this paper include DD 963, FFG 7, and LST 1179 Class ships. The following discussion will describe the general characteristics of each replacement platform option and the combat systems elements installed in each. The capabilities of each platform and the pros and cons of each as a replacement for the SDTS will then be discussed.

Class General Characteristics

Table 1 (below) compares the general characteristics of the ship classes under consideration with those of the SDTS.

Compared to the SDTS, replacements from each of the the candidate platforms offer two key advantages: greater hull integrity and faster speed. Each of the platforms being considered as SDTS replacement is newer than the SDTS. Accordingly, none have the degree of hull deterioration present in the SDTS. Each is also capable of greater speed than the SDTS. The condition of the SDTS hull, in conjunction with its speed limitation, currently restricts its underway operation to sea states of four or less. Weather conditions in the San Nicolas Island operation area (OPAREA), known to degrade rapidly at times, place the SDTS at risk, unable to outrun a storm and return to port, if necessary.

TABLE 1.
CLASS GENERAL CHARACTERISTICS

SHIP CHARACTERISTIC	DDG 993	FFG 7	LST 1179	SDTS
Length	563 ft.	408 ft.	522 ft.	418 ft.
Beam	55 ft.	45 ft.	69 ft.	44 ft.
Draft	32 ft.	24 ft.	11 ft.	24 ft.
Displacement	9,900 Tons	4,100 Tons	8,450 Tons	4,000 Tons
Propulsion/Steering	Four GE LM-2500 Gas Turbines, Twin Screws/ Rudders	Two GE LM-2500 Gas Turbines, Single Screws/ Rudders & Bowthruster	Six Diesel Engines, 16000 Brake HP, Two Shafts	Two 1200 HP Caterpillar Diesels/ Twin Outdrives/ Bowthruster
Max. Speed	27 Kts/2 GTs, 32+ Kts/4 GTs	18 Kts/1 GTs, 30+ Kts/2 GTs	20 Kts	8 - 10 Kts
Ship's Power	Gas Turbine Generator	Diesel Generators	Diesel Generators	Diesel Generators
Berthing Space	Stateroom - 30 Pers Other – 352 Pers	Staterooms - 13 Pers Other - 287 Pers	Staterooms - 13 Pers Other - 244 Pers	Staterooms - 19 Pers Other - 45 Pers

Fuel consumption during underway operations will increase significantly with any of the replacement options under consideration. Greater hull integrity combined with greater speed capability, however, reduce sea state restrictions on underway operations, enhance operational performance, and reduce costs in several other key areas. These factors help offset the additional fuel costs. It is also possible to reduce fuel consumption while taking advantage of the power and speed of the gas turbine propulsion systems in the DD 963 and FFG 7 class ships. Only one-half of the propulsion plant would be required during most underway periods; 2 of the 4 gas turbine engines in DD 963 class ships and 1 of the 2 gas turbine engines in an FFG 7 class ship. The other engines would be kept in reserve as spares.

In addition to removing sea state operating restrictions, a faster platform would shorten transit time to and from the OPAREA and reduce crew overtime hours required to support operations. Currently, with its maximum speed limited to 8 - 10 knots, the SDTS must depart one calendar day in advance of a scheduled unmanned live-fire operation to arrive in its typical San Nicolas Island OPAREA, and it spends another calendar day returning to port. Each of the newer platforms would cut one to two days of transit time from any scheduled unmanned live-fire mission and reduce project costs associated with crew overtime. The SDTS speed limitation also restricts the number of events that can be scheduled and conducted in any given period because of the time involved in rendezvousing with crew and tug boats to transfer crew and target barges prior to and following unmanned live-fire events. Additionally, because of the time SDTS must spend on range during remote live-fire events, dedicated range resources are tied up for long periods while the SDTS is transiting the range, with the associated costs being passed on to the user. Under ideal conditions, a faster platform could complete all required operations and exit the range in one day (vice up to three days for the SDTS), minimizing direct project costs associated with both ship and range operations.

For a typical unmanned, remote-controlled, live-fire operation, mission cycle time for the SDTS is approximately 45 hours at a cost of $56,317.00. Mission cycle time in any of the proposed replacement options is estimated to be less than 17 hours at an approximate cost of $45,814.00. Thus, replacing SDTS with a more capable platform could reduce mission cycle time by over 60% and mission cost by nearly 17%.

Installed Combat Systems Elements

Table 2 shows the major detection, control and engagement systems elements installed in each of the proposed ship classes as compared to the SDTS. Not including the systems temporarily installed in SDTS for T&E purposes and then removed, organic SDTS systems limit its T&E capability to primarily self defense weapons systems. Because its operational limitations far exceed its operational capabilities, the SDTS is and will remain incapable of providing viable fleet operational, exercise, or training support, and its RDT&E and ISE support beyond self defense systems will remain limited. Conversely, a replacement platform with a greater variety of installed detection, engagement and command and control systems would provide the capability to support a much broader RDT&E, ISE, and fleet support mission than the SDTS. As indicated by the system element to ship class matrix in Table 2:

- DD 963 Class: would provide the most robust T&E platform, allowing for a broad range of T&E and fleet support.
- FFG 7 Class: would provide very nearly a one-for-one replacement for the SDTS, allowing for only a nominal expansion of current SDTS support capabilities.
- LST 1179 Class: provides virtually no organic systems assets and would be the most costly to equip and convert into a viable T&E support platform.

TABLE 2.
COMBAT SYSTEM ELEMENT COMPARISON MATRIX

MAJOR CS ELEMENTS	DD 963	FFG 7	LST 1179	SDTS
DETECT				
2D RADAR - SPS-49		X - (V)4		X A(V)1
2D RADAR - SPS-40E	X			
2D RADAR - TAS MK 23	X			X
ECM - SLQ-32	X - A(V)3	X - A(V)5		X - A(V)3
SONAR - SQS-53	X - C			
SONAR - SQS-56		X		
CONTROL				
CDS	X	X		
SSDS				X
ENGAGEMENT				
GFCS MK 86	X (10)			
GFCS RDR - SPG-60	X			
GFCS RDR - SPQ-9	X (A)			
GMFCS - NSSMS MK 91	X			X
NSSMS FC RDR - MK 95	X			X
GMLS - MK 13		X		
GMLS - MK 29	X			X
VLS - MK 41	X			
GUN - MK 45 (5/54)	X			
GUN - MK 75 (76MM)		X		
GUN - CIWS MK 15 BLK 1	X (A)	X (A)	X	X (B)
UFCS - MK 116	X			
UFCS - MK 309		X		
TOMAHAWK WCS BLK III	X			

Test Project Applicability
SSDS and RAM Block 1 are currently being tested in SDTS. Rearchitectured NSSMS and High Frequency Surface Wave Radar (HFSWR) testing is scheduled to commence in Q2 FY99, with ESSM testing scheduled for Q4 FY00. Applicability of other potential test projects will depend largely on the platform chosen as a replacement for SDTS, organic combat system elements present, and its ability to accept the additional combat/weapons systems required to support potential future test projects. Additional test projects tentatively identified as candidates for potential testing in an SDTS replacement ship are:

- Active Integrated Electronic Warfare System (AIEWS)
- Multi-Function Radar (MFR)
- Rolling Airframe Missile Helicopter, Aircraft, Surface Mode (RAM HAS)
- Vertical Launch Enhanced Seasparrow Missile (ESSM/MK 41 VLS)
- Hardkill/Softkill
- AN/SPQ-9B
- Infrared Search and Tracking (IRST)
- DD 21 Technology Related Projects
- Smart Ship ATDs
- LPD 17 Systems
- Advanced Tomahawk Weapon Control System (ATWCS)
- Theater Ballistic Missile Defense (TBMD) Support
- Naval Surface Fire Support (NSFS)
- Land Attack Standard Missile (LASM)
- HM&E Improvements
- Underway Replenishment (UNREP) Test Ship
- Communications/SATCOM
- Other Office of Naval Research (ONR) Projects

With these potential future test projects in mind, the following paragraphs briefly describe the pros and cons associated with each of the discussed replacement options.

DD 963

A number of these ships are already decommissioned and additional units are scheduled for decommissioning over the next few years. With the age of their hulls (16-25 years old), their propulsion system, speed, size, and additional systems, the DD 963 class would be the most robust replacement platform option, and represents a significant increase in potential RDT&E, ISE and fleet support and the most desirable replacement candidate. With the variety its organic systems and the overall operational capabilities of this Class, this option will provide the greatest versatility and the ability to support fleet training exercises when not otherwise employed as an RDT&E or ISE asset. Some of the pros associated with the DD 963 class ship as a replacement for SDTS are:

- Currently installed (organic) systems can reduce combat system conversion costs
- Required additional installation relatively easy to accomplish, i.e., the AN/SPS-40 radar would be easily replaced with the AN/SPS-49 A(V)1 radar
- Sizable mast and superstructure can easily support a variety of sensor systems, including the MFR

- The large Combat Information Center (CIC) can easily accommodate multi-users
- Plenty of topside deck space available to accommodate numerous temporary projects
- Excellent ship stability and speed
- Excellent ship logistics support infrastructure
- Ability to support all of the potential test projects (identified above)
- Ability to support T&E of virtually any surface warfare system in the Navy inventory, including legacy and FMS systems
- Ability to electronically mimic any other ship, up to and including a CVN; thus able to support a host of fleet exercise and training missions, including Battle Force Interoperability testing and training.

Some of the cons associated with a DD 963 class replacement platform are:

- Increased recurring costs due to manning levels and fuel consumption
- Potential recurring harbor costs due to ship's draft.

FFG 7

The FFG 7 Class hull is about the same size as the SDTS and, with the exception of combat system configuration, represents a near one for one replacement for the SDTS. The ships range in age from 11 to 23 years. USS STARK (FFG 31) scheduled to be decommissioned in FY99 is 18 years old. While the ships already have AN/SPS-49 radars and CIWS installed, installation of NSSMS, TAS, RAM and SSDS would be required to support Ship Defense system testing. To locate these systems, removal of MK13 launcher and the 76MM gun and director would be required. The higher speed would enhance test operations, but the platform size would limit the range of test programs that could be accommodated. To a far lesser degree than a DD 963 class ship, the FFG 7 Class option could provide some increased versatility and limited fleet support, but would offer only nominal support gains over the SDTS.

Some of the pros associated with the FFG 7 class ship as a replacement for SDTS are:

- Currently installed (organic) systems will reduce combat system conversion costs
- Manning level similar to SDTS
- Fuel consumption is significantly less than that of a DD 963 class ship
- Required additional installation would be relatively easy to accomplish
- Fair ship stability and good speed
- Excellent ship logistics support infrastructure
- Ability to support many of the potential test projects identified above
- Ability to support T&E of many surface warfare systems, including legacy and FMS systems
- Ability to support some fleet exercise and training missions

Some of the cons associated with an FFG 7 class replacement platform are:

- Limited mast/superstructure may not accommodate other sensor systems, i.e., MFR
- Smaller CIC may not be able to accommodate multi-users
- Limited topside deck space may not accommodate temporary projects
- Lack of resident RAM, TAS Mk 23, and NSSMS systems, if required, may increase combat

system conversion costs.

LST 1179

As can be seen in Table 2, aside from a single CIWS system, the LST 1179 class ship has virtually no other detection, command and control, or engagement systems installed. Its only sensor systems are AN/SPS-10F and AN/SPS-64(V)9 navigation radars.

The LST 1179 Class has minimal support for electronic equipment; e.g., there is no capability to generate 400Hz power. The ability of other ship features, i.e., fire main, chilled water, air conditioning, piping, cabling and ducting to support the type of equipment required in a viable combat/weapons systems T&E platform is unknown and may require significant modification, at considerable cost, to provide the requisite support.

Installation of topside antennas, weapons systems and other equipment would require significant structural modifications. To install antennas and equipment at heights reflective of the topside locations on active surface combatants and to allow engagement by weapons systems of targets attacking a target barge towed astern of the ship, the existing superstructure would require modification and a mast would need to be added. Because the LST 1179 class ship is a flat-bottomed, shallow draft vessel designed for carrying cargo close to the waterline, the weight of added structure, antennas, weapons systems, and other equipment to the topside structure of the ship would adversely impact the ship's stability, rendering it unsafe and unseaworthy. The addition of significant ballast is expected to have minimal effect due to the ship's flat bottom and shallow draft. Extensive engineering and structural modification would be required to an LST 1179 class ship to enable it to perform as a T&E platform. Such engineering and modification is roughly estimated to cost in excess $9M, and the ship's stability and seaworthiness would remain questionable, at best.

The pros associated with the LST 1179 class ship as a replacement for SDTS, while few, are:

- Ship speed sufficient
- Moderate manning levels
- Extensive below deck space available

The cons associated with an LST 1179 class replacement platform are considerable:

- No resident sensor/weapon systems
- Ability to support few if any of the potential future test projects listed above without costly installation efforts
- Would require extensive, cost prohibitive, and lengthy engineering and structural modifications to support installation of required sensor/weapons systems
- Lengthy conversion time would impact future project T&E schedules
- Only available LST 1179 class ships are in mothballs and would require considerable additional reactivation costs
- Limited topside deck space may not accommodate most temporary projects
- Limited topside deck space to support required weapons systems installations and may require extensive structural reinforcement
- Topside configuration may preclude locating systems where necessary to meet target engagement scenarios

- Small CIC would not accommodate multi-users
- Limited ship logistic support infrastructure
- Inadequate ship stability to support required installations and operate safely at sea

Included in this paper for comparison purposes only, an LST 1179 class ship is not considered a viable SDTS replacement option. Conversion would be cost prohibitive and its ability to provide realistic RDT&E, ISE or fleet support would be extremely limited. While it will continue to be compared in the various tables to follow, this paper will not further discuss in detail the replacement of SDTS with an LST 1179 class ship.

Manning Comparison

HM&E Manning

Table 3 shows the HM&E manning requirements, in workyears, for each ship class under consideration as compared with those of the SDTS. HM&E crew size has been estimated based on analysis of PMS requirements, best engineering practice for Merchant and Navy ships for watchstanding requirements, and providing for a responsive fire fighting and damage control team. With the exception of government management and oversight all positions would be outsourced to contractors, with government ISEA support provided as required.

TABLE 3
HM&E MANNING COMPARISON
(Workyears)

POSITION	DD 963	FFG 7	LST 1179	SDTS
Master	1	1	1	1
Mates	2	2	2	2
Chief Engineer	1	1	1	1
Deck Crew	7	5	7	5
Electricians	5	1	2	1
GSE Techs	4	1	0	0
IC Men/ETs	2	1	2	1
AC&R Techs	3	1	1	1
Machinist/Mechanics	8	8	8	8
TOTALS	33	21	24	20

Combat Systems Manning

Table 4 shows the estimated combat systems manning requirements, in workyears, for each ship class under consideration as compared to SDTS. Like HM&E manning, combat systems crew size has been estimated based on analysis of PMS requirements and best engineering practice for shipboard watchstanding. Actual manning will depend on systems installed and the total mission area expected to be supported by the platform. The numbers in the table are considered minimum requirements to support underway RDT&E and fleet exercise training evolutions. Like HM&E manning, with the exception of government management and oversight, it is anticipated that all other positions could be outsourced to contractors, as appropriate, with ISEA support provided as required.

TABLE 4
COMBAT SYSTEMS MANNING COMPARISON
(Workyears)

POSITION	DD 963	FFG 7	LST 1179	SDTS
CS Supv.	1	1	1	0
SPS-49 RSC	2	2	2	2
TAS MK 23	1	0	0	1
NSSMS	3	3	3	1
CIWS	1	1	1	1
RAM	1	1	1	1
AN/SLQ-32	1	1	1	1
SSDS	3	3	3	1
*Video Surveillance	N/A	N/A	N/A	N/A
TOTALS	**13**	**12**	**12**	**8**

* Video Surveillance system maintained by NAWCWPNS Point Mugu personnel.

Total Manning Comparison

Table 5 totals manning requirements estimated in **Tables 3** and **4** above, showing the total estimated manning requirements, in workyears, of each ship class under consideration as compared to the SDTS.

TABLE 5
TOTAL MANNING COMPARISON
(Workyears)

MANNING AREA	DD 963	FFG 7	LST 1179	SDTS
HM&E	33	21	24	20
COMBAT SYSTEMS	13	11	12	5
TOTAL MANNING	**46**	**32**	**36**	**25**

HM&E Non-Recurring Conversion and Annual Recurring O & M Costs

Table 6 summarizes SDTS replacement non-recurring and recurring conversion costs. The least costly platform option in terms of conversion and operation and maintenance is expected to be the FFG 7 Class platform. Benefit gained for the dollar spent, however, will be nominal. Considered a one-for-one replacement for SDTS, it would offer little more in terms of T&E mission scope expansion or meaningful fleet support. On the other hand, and despite the higher costs associated with converting and operating a DD 963 Class platform, these ships promise the greatest capability, versatility and flexibility to support RDT&E, ISE and fleet support mission areas far broader in scope than will an FFG 7 Class platform. Costs of converting an LST 1179 class platform, in terms of both dollars and time, are considered prohibitive, and the converted platform would still be incapable of safely supporting a viable T&E or fleet support mission.

TABLE 6.
SDTS REPLACEMENT
HM&E NON-RECURRING AND RECURRING COSTS ($K)

COST ELEMENT DESCRIPTION	DD 963	FFG 7	LST 1179
(1)HM&E NON-RECURRING COST			
Inspect, Groom, Repair and Structural Modifications	350	350	1670
Digital Ship Remote Control System	500	500	500
Harbor Dredging	1200		
TWARSES Installation	50	50	50
Fuel	200	200	200
SDTS Disposal	600	600	600
TOTAL NON-RECURRING COSTS	**2900**	**1700**	**3020**
(2)HM&E RECURRING COSTS			
HM&E Operations & Maintenance Crew	2605	1580	1875
Gov't Salaries (2.7 Civilians & 2 Military)	526	526	526
Safety and Environmental	23	23	23
Annual Gauge Cal/TWARSES/Pump Maint.	40	40	40
Annual Hull Inspection	10	10	10
Unplanned/Unscheduled Maintenance	400	400	400
CBC Port Services	275	275	275
Ship Remote Control System Maintenance	15	15	15
TOTAL ANNUAL RECURRING COSTS	**3894**	**2869**	**3164**

(1) HM&E non-recurring costs assume there will be NO major conversion requirements for: Propulsion System, Electrical System, Communications, Berthing, Galley/Potable Water System, Navigation System, or Hull Maintenance, and that NO post-commissioning stripping occurs.

(2) In addition to recurring annual costs, anticipate requirement to dry dock the ship every 5 years at a cost of approximately $3.0M.

Combat System Conversion Requirements and Non-Recurring Conversion Costs

Table 7 shows the systems it is anticipated will be required in the new platform with the estimated non-recurring conversion costs associated with each system element. While this paper suggests possible general mission areas in which the new platform could be employed for purposes of identifying systems to be installed in a replacement platform, defining its total mission is beyond the scope of this paper. With the exception of VLS MK 41, all other systems elements listed in **Table 7** are currently installed in SDTS and could be transferred to the replacement platform, hence there would be no cost in most cases to procure system hardware.

TABLE 7.
SDTS REPLACEMENT
COMBAT SYSTEM CONVERSION REQUIREMENTS AND NON-RECURRING COSTS(1)
($K)

CONVERSION REQUIREMENT	DD 963	FFG 7	LST 1179
AN/SPS-49A(V)1	1200	200	1750
TAS MK 23	0	535	835
AN/SLQ-32(V)3	100	168	193
NSSMS GMFCS/GMLS	290	857	997
VLS MK 41(1)	0	500	906
CIWS BLK 1B (Including Camera Mount)	170	170	268
WRN-6	150	150	150
RAM BLK 1	118	145	239
DATA XFER/CS REMOTE CONTROL SYSTEM	600	600	850
MAST MODIFICATIONS	40	250	805
SUBTOTAL	**2668**	**3575**	**6993**
400 HZ POWER	15	30	710
60 HZ POWER	45	60	290
HVAC MODIFICATIONS	50	70	166
MAST MODIFICATIONS	15	15	545
SUBTOTAL	**125**	**175**	**1711**
ENGINEERING/DESIGN	276	320	461
ESTIMATED TOTAL COST	**3069**	**4070**	**9165**

(1) Assuming Acquisition of a VLS Equipped DD 963 Class Ship.

Estimated Average Daily User Costs

Table 8 shows the estimated average daily user costs associated with each ship class under consideration as compared to the SDTS. In forming the basis of the estimated costs shown in this table it was assumed the ship would operate underway 75 days per year. Fuel costs could vary substantially, based on the nature of the operations conducted, transit distance, i.e., whether the ship operates on the inner or outer sea range, and transit speed. Fuel costs were estimated, based on a cost of $.88/gallon, using Pacific fleet allocations of 500bbl/day for a DD 963 platform and 197bbl/day for an FFG 7 or LST 1179 platform.

TABLE 8.
ESTIMATED AVERAGE DAILY USER COSTS ($K)

COST ELEMENT	DD 963	FFG 7	LST 1179	SDTS
Fuel	22	8.7	8.7	1.2
Food Service	2.2	1.9	1.9	1.5
Crew Salaries	9.4 (47) [1]	5.8 (29) [1]	6.7 (36) [1]	5 (25) [1]
Gov't Salaries (2 Pers)	1 (2) [2]	1 (2) [2]	1 (2) [2]	1 (2) [2]
Tug/Pilot/Port Services	0.70	0.60	0.70	0.30
ESTIMATED TOTAL USER COSTS	**35.3 (73.9)**	**18 (42.2)**	**19 (49.3)**	**9 (30)**

[1] Contractually, the crew are paid up to 12 hours/day during underway periods. The number in parenthesis represents the cost to the user of paying crew salaries for the entire 12 hours/day while the ship is underway, while the number without parenthesis represents the cost to the user of paying only crew overtime, up to a maximum of 4 hours/day.

[2] Government personnel are paid for actual hours worked, up to a maximum of 16 hours/day for every 24-hour underway period (2/3 Rule). The number in parenthesis represents the cost to the user of paying for all hours worked by the 2 government personnel during each underway period. The number without parenthesis represents the cost to the user of paying only government personnel overtime for each underway period.

Implementation

The figure below identifies by dates known and projected test requirements. It will be necessary to develop a plan to transfer some key equipment from the SDTS to the replacement platform and for transition of testing. Because deinstallation/installation of equipment can be accomplished pierside in Port Hueneme, equipment transfers can be accomplished over time, dictated by test requirements and ship availability. Subject to actual turnover timeframe the "conversion" work will be limited to the installation of combat system and ship remote control systems and those systems essential to ensure full performance as a test ship. Installation of actual combat systems elements will be accomplished in phases, dictated by test requirements, and to avoid the need for major near-term budget outlays.

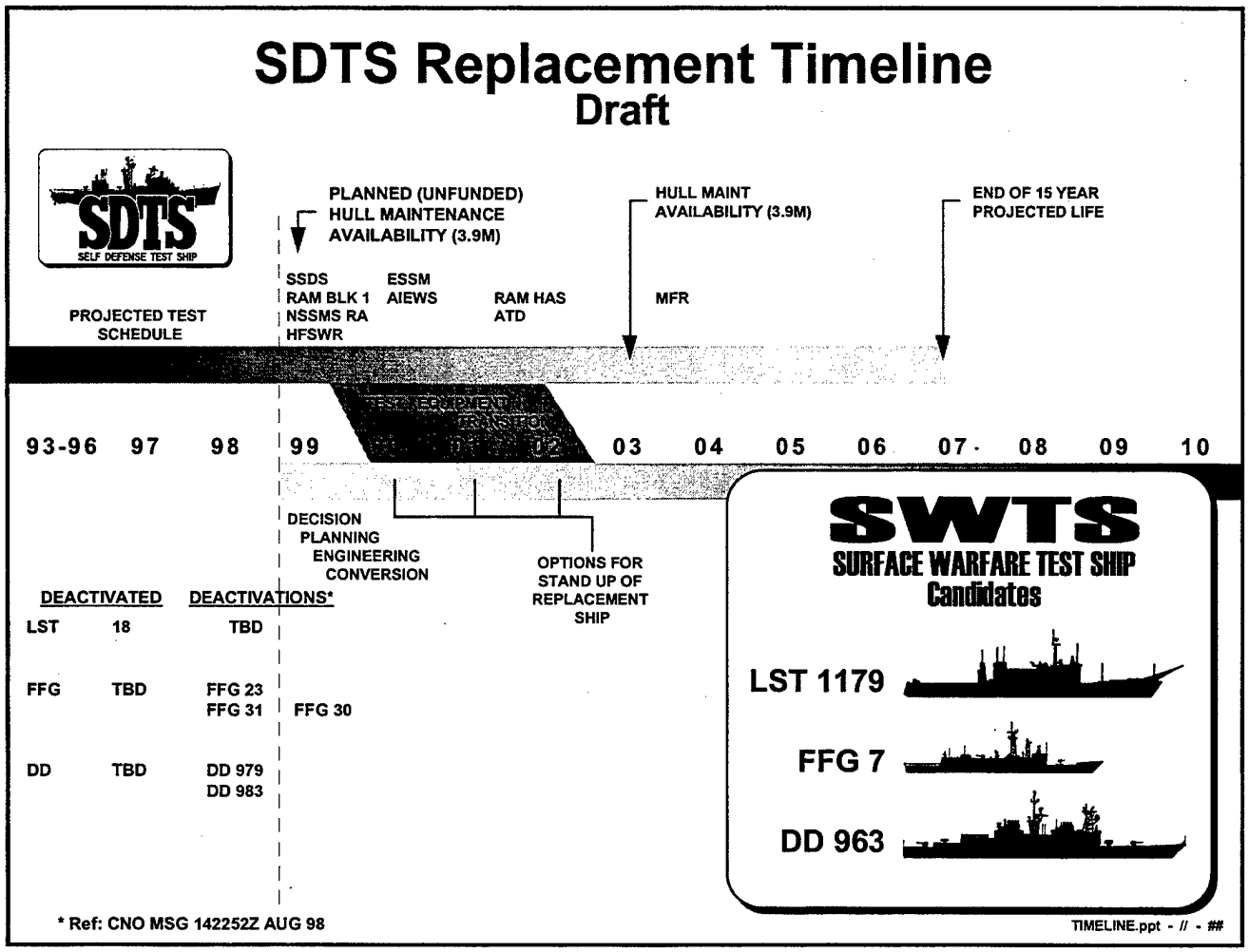

Location

Since it began service in 1994, the SDTS has been homeported in and operated from Port Hueneme, California. The benefits of retaining the present location for any follow on test ship are many. It would insure maximum utilization and productivity, and would benefit from the experience of PHD NSWC's existing onsite management, contractor operations and maintenance team, and the supporting infrastructure already in place at PHD NSWC.

Some of the factors making Port Hueneme the ideal location for a follow-on T&E platform are:

- Nearly year-round operations possible, on both the Point Mugu Sea Test Range and Southern California (SOCAL) OpAreas, unrestricted by snow, ice, and hurricanes, and only limited number of fog and other bad weather days per year.

- Minimum hazard to pleasure and fishing craft and hot areas in which to conduct safe, live-fire testing unrestricted by commercial air traffic corridors.

- Point Mugu is a fully instrumented test range with virtually unlimited target presentation capability available, including Special Engineering Test Targets (SETTs). Future close-in, self defense, or area defense systems will have ever expanding requirements to fly against 'real world' threats and targets.

- Land mass backgrounds are available as may be required, and which are essential in testing the effectiveness of systems in a littoral environment.

Finally, SDTS Remote operation from the sea test range Control Center at Point Mugu, and Remote Control of Combat Systems from the Surface Warfare Engineering Facility (SWEF) at PHD NSWC have been very successful. This remote operation capability is essential to safe, at-sea, live-fire testing. Additionally, direct access from Port Hueneme harbor to the sea test range involves minimum berth-to-test range transit time.

Benefits

Replacing the SDTS with a newer platform is considered not only a necessary eventuality, but is also envisioned to provide substantial benefits over attempting to maintain the existing SDTS. Some of these benefits include:

- Continued capability to conduct safe, at-sea, live-fire testing without risk to operational fleet units or personnel.

- Capability and flexibility, on a dedicated basis, to support a broader range of RDT&E, ISE, FMS, legacy systems test support and fleet training support.

- Capability to support multiple T&E tasking in a larger DD platform.

- Flexibility of supporting, on a dedicated basis, dynamic scheduling necessary to meet T&E milestone requirements.

- Because T&E can be accomplished on a dedicated basis, reduced overall inception-to-introduction time and costs associated with new systems or upgrades to existing systems.

- Flexibility to install, modify, and deinstall a variety of systems and equipments without waiting for fleet ship availability or impacting on their operating schedules.

- Greater range capability to allow transit to and support test operations on other ranges, i.e., SOCAL OpAreas and PMRF, Barking Sands, Hawaii.

- Greater speed capability will allow for more efficient, cost-effective T&E operations, shorter transit times to and from the sea test range, reduced requirement for crew overtime, and reduced amount of time the ship spends on range. Consequently, the benefits allow the range greater scheduling flexibility, and allow for scheduling a greater number of test events during any given underway period.

- Finally, and perhaps most importantly, a capable, flexible, dedicated surface warfare test ship will reduce the engineering community's dependence on fleet units for T&E support, relieve fleet commanders of the burden of providing heavily tasked fleet units for T&E missions. Thus the risk of turning a commissioned warship into a T&E platform is mitigated.

Conclusion and Recommendations

Despite what its name may otherwise imply, the SDTS has proven itself capable of cost effectively supporting RDT&E efforts beyond the scope of "self defense" systems. Like its predecessors, it also has proven the concept and value of using a dedicated ship to conduct developmental and operational testing of systems intended for use in a shipboard environment. PHD NSWC has developed an effective test ship support infrastructure. Its onsite management team, in conjunction with its contractor support team, have continually reduced costs associated with the operation and maintenance of the SDTS, having recently been awarded the Vice Presidential Hammer Award for their innovative, cost-saving efforts.

Despite higher cost of ownership for operations and maintenance, a replacement platform can pay dividends far in excess of costs. With the exception of the LST 1179 class ship, a replacement will provide considerably increased operational flexibility and capability, and will reduce the overall long-term cost of upgrading existing systems or introducing new systems to the fleet. The total scope of surface warfare systems RDT&E, ISE, FMS, legacy systems, and overall operational support will depend largely on which of these platforms is selected to replace the SDTS and the suite of detection, engagement, and command, control and communications systems installed and supported.

Seven years elapsed between the time ex-DECATUR was requested by CNO and the conduct of its first T&E event as SDTS. Due to its age and the extent of hull and tank system erosion, it is unlikely SDTS will be capable of supporting its intended 15-year T&E mission life without large capital expenditures for dry-docking and major repairs. To avoid the significant cost associated with such repairs and to ensure continuity of test support, every effort should be made to identify as early as possible a replacement platform, an appropriate sponsor, and the funding necessary to begin the conversion of a new platform. It is possible to stand up a new test ship by the beginning of FY 2001, given a high priority and the early identification of a specific hull and funding to commence planning and engineering. A more realistic date, and one that would avoid projected maintenance costs of greater than $3.9M in FY 2003, would be to target stand up of the replacement ship by early FY 2003.

For nearly 50 years the Navy has recognized the need for dedicated platforms to support weapons systems RDT&E projects. The need for a dedicated platform to support these efforts has never been greater. Fleet downsizing has increased the operational tasking imposed on remaining fleet units and limited the availability of fleet assets to support RDT&E and ISE efforts. The Navy's shift in emphasis to littoral warfare and the requirement to support efforts such as Cooperative Engagement Capability and Battle Force Interoperability testing and training have made high fidelity T&E necessary. Our sailors must have confidence in the systems they use to fight and defend their ships.

RADM S. H. Baker, COMOPTEVFOR, summarized it best in his letter of 9 October 1998 to ADM Gaffney:

> "There will always be a need to test close in weapon systems in an at sea environment that permits stressing the system and still maintaining crew safety. So, we will need to fund as asset like the SDTS in the future to ensure the Fleet can have justified confidence in their self defense systems . . . .
>
> "The impact on Fleet operational schedules and the increasing difficulty in obtaining test platforms as the size of the Fleet continues to contract have been particularly nettlesome problems for the Navy leadership . . . .
>
> "From my point of view as an operational tester and a warfighter, better, earlier and higher fidelity testing, leading to systems that more nearly attain their ord requirements, at an ultimately reduced cost, fully justifies the initial expense of getting back to the basics. A surface test ship was very useful in the 70's. It is nearly an imperative today."

Early identification and selection of a suitable replacement for SDTS will ensure maximum, uninterrupted support to meet the requirements referred to by RADM Baker above. Replacement of SDTS with a newer, more capable, flexible platform, in conjunction with PHD NSWC's award winning management and contractor support team, will ensure that safe and effective warfare systems are delivered to the Fleet and the sailors who must use them, today and into the 21st century.

Appendix C

MISSION NEEDS STATEMENT

There are unique requirements associated with the developmental and operational testing of ship self defense sensor and weapon systems. Ship self defense systems are primarily concerned with defending against radially inbound, high speed threats. Engagement of such threats occurs at short ranges, placing a ship in blast, shrapnel, and airframe debris impact areas. Safety constraints, including a 2.5 nautical mile (nm) closest point of approach (CPA) restriction for commissioned ships, makes realistic performance testing of ship self defense systems impossible on commissioned warships. Altering threat profiles to introduce sufficient safety simultaneously precludes a truly threat representative engagement scenario, rendering system performance testing and evaluation unrealistic and ineffective. Defending against real world threat representative targets requires placing the ship self defense system under test on an unmanned, remotely controlled platform to eliminate risk to commissioned warships and personnel. The unique capabilities of the Self Defense Test Ship (SDTS), with its Combat System Remote Control System (CSRCS) and Ship Remote Control System (SRCS), allows realistic engagements and live-fire test and evaluation (T&E) of ship self defense sensor and weapons systems against real world threats, without endangering commissioned warships or personnel. In addition to this primary mission, the secondary mission of the SDTS is to provide a versatile, cost-effective at-sea T&E platform to support developmental and operational testing of a variety of other sensor, tracking, and engagement systems and associated support elements.

At over 43 years old, and only four years into its planned 15 year life cycle, the SDTS has experienced significant hull and tank system deterioration. Incapable of supporting its 15 year intended life cycle without substantial ongoing cost for hull and tank repairs, it must be replaced with a newer hull. Possible replacement candidates include decommissioned FFG 7 or DD 963 Class ships. The latter is the preferred platform because it will afford the greatest versatility and scope of T&E mission accomplishment.

OPERATIONAL REQUIREMENTS

Description of Operational Capability

In support of the mission need statement, Commander, Operational Test and Evaluation Force explored several alternatives for a ship self defense test site. Of the various alternatives proposed, which included expansion of existing land-based test sites and a modularized barge, it was decided that, in order to effectively test shipboard sensor and weapons systems in the marine environment in which they were intended to operate, a converted decommissioned destroyer would be used for this purpose. In April 1988, Chief of Naval Operations designated Ex-Decatur, DDG 31, to be converted to SDTS, anticipating an operating life cycle of 10 - 15 years. In the near term, SDTS was required to support at-sea, live-fire testing of the Close-In Weapon System (CIWS) and the Rolling Airframe Missile (RAM) System, with Target Acquisition System (TAS) MK 23 and AN/SLQ-32 Electronic Countermeasures System. It was also intended to support any future test requirements that may be identified. Future test projects that have been tentatively identified for possible testing, at least in part, in SDTS include:

- Active Integrated Electronic Warfare System (AIEWS)
- Advanced Directed Energy Weapon System
- Battle Group Interoperability (BGIO)/BGI System Integration Tests
- Multi-Function Radar (MFR)
- Rolling Airframe Missile Helicopter, Aircraft, Surface Mode (RAM HAS)
- Vertical Launch Enhanced Seasparrow Missile (ESSM/MK 41 VLS)
- AN/SPQ-9B
- Infrared Search and Tracking (IRST)
- DD 21 Technology Related Projects

- LPD 17 Systems
- Advanced Tomahawk Weapon Control System (ATWCS)
- Smart Ship Technology
- Theater Ballistic Missile Defense (TBMD) Support
- Naval Surface Fire Support (NSFS)
- Land Attack Standard Missile (LASM)
- HM&E Improvements
- Communications/SATCOM

Shortcomings of Existing SDTS

Recent ultrasound hull survey indicates that the hull is deteriorating, from the inside out, at a rate that raises serious concerns about the ability of the SDTS to safely and cost effectively support a 15 year mission life cycle. Results of recent hull survey show that 30% - 40% of the ship s hull below the water line has lost 50% of its original design thickness. Repair of affected areas of the hull will require a dry-docking a will be extremely costly. Some of the ship s fuel tanks have been found to be seeping into adjacent spaces and have required costly repairs. Tank system condition is also suspect and may require further costly repairs.

In addition to hull and tank systems deterioration, current SDTS configuration may not support some of the future sensor and weapon systems for which an appropriate marine testing environment is required, without extensive and costly structural modifications.

Capabilities Required for Replacement SDTS

The platform designated to replace to the SDTS must be capable of supporting the primary mission of conducting at-sea, live-fire, manned or unmanned, remote controlled operations in support

of self defense systems T&E efforts. Requirements for this platform include, but are not limited to the following:

- Sustained 15 kts minimum top speed capability to improve ship operations in high sea state/wind conditions. Original SDTS requirement of 3 - 8 kt speed has been found to be inadequate to maneuver and safely operate in the sea state 4+ conditions typically found on the Pacific Missile Test Outer Range in the vicinity of San Nicolas Island.

- Ship and Combat Systems remotely controlled, the remote control system mechanisms to be permanently installed aboard the ship.

- Electrical power generating capacity (including 400 Hz), air conditioning, chilled water, and other auxiliary services sufficient to support ship systems and all installed combat systems.

- Gyro and stable element to provide heading and vertical reference inputs.

- Easy helicopter and utility boat access to accomplish transfer of personnel and materials.

- Permanently installed digital and video data recording capability and multiple camera installations to record test events and reduce volume of data transmitted ashore.

- Facilities for infrared (IR) and radio frequency (RF) augmentation to support special test events, as required.

- Observable signatures reduced to maximize probability of target homing on towed decoy

target barge and to minimize risk of missile strike on ship.

- Berthing for 75 - 100 crew and embarked test project personnel. Original SDTS requirement was for support of 50 embarked personnel; however, past experience with some SDTS projects indicate that total crew and test project teams can sometimes approach 100 personnel.

- Ample topside deck space and below deck space to accommodate installation of permanently installed combat systems, installation of other temporary weapon system elements, and addition of future weapon systems installations, as required, including a single 8-cell VLS module.

- Size and configuration of ship sufficient to accomplish simultaneous testing of more than one system to allow sharing of assets and costs by users and to resolve common self defense systems issues.

Logistics Support

Logistics support will be centrally managed by Port Hueneme Division Naval Surface Warfare Center (PHD NSWC). Existing Navy supply system will be used to support Navy systems and equipment, and commercial vendors will be used for supporting commercial off-the-shelf (COTS) systems and equipment.

Infrastructure Support

Ship will be berthed at Naval Construction Battalion Center (NCBC), Port Hueneme, CA, which is capable of providing all hotel and port services required. PHD NSWC will provide onsite ship management for Hull, Mechanical and Electrical (HM&E) systems and Combat Systems.

Operation of the ship at sea and the operation and maintenance of HM&E systems, both inport and underway, will be accomplished by contractors. Contractors will also provide combat systems support, where appropriate, as determined by PHD NSWC onsite management principals.

Schedule Considerations

It is anticipated that the current SDTS has a maximum of 2 - 3 years of operating life remaining. A replacement ship will need to be identified within the next 12 - 18 months to allow for conversion and becoming operational and capable of supporting future test projects within the next 24 - 36 months. Deinstallation/installation of equipment will be accomplished over time pierside in Port Hueneme, dictated by test project schedules and ship availability. Conversion work will be limited to installation of combat systems, remote control systems, and other essential systems to ensure full performance as a test ship. Installation of combat systems elements will be accomplished in phases, dictated by test project requirements, to avoid major near-term budget outlays.

Once operational, scheduling of ship operations will be centrally managed by PHD NSWC, based on test project priority and availability of funding.

Cost Considerations

Non-recurring conversion costs and recurring costs of ownership (operations and maintenance) for HM&E and Combat Systems will be by centralized budgeting via the SDTS program sponsor and centrally managed by PHD NSWC. Test project users will bear the cost of ship and weapon systems operations directly associated with test projects, including but not limited to costs for special system/equipment installations, crew salaries, port services, fuel, and food service.

Appendix D

Functional Flow Diagrams

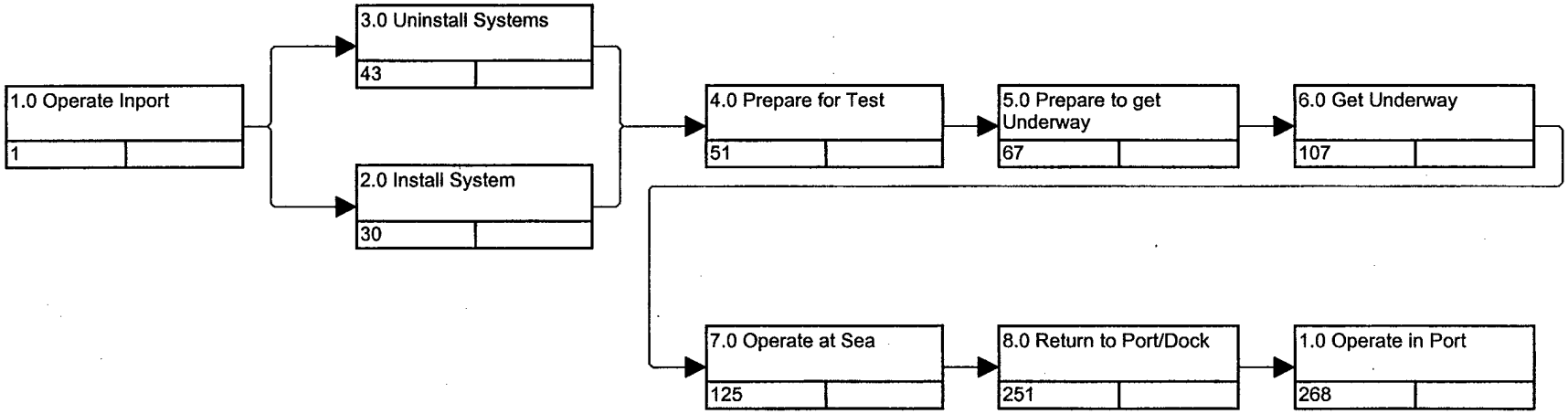
1.0 Operate Inport
1
3.0 Uninstall Systems
43
2.0 Install System
30
4.0 Prepare for Test
51
5.0 Prepare to get Underway
67
6.0 Get Underway
107
7.0 Operate at Sea
125
8.0 Return to Port/Dock
251
1.0 Operate in Port
268

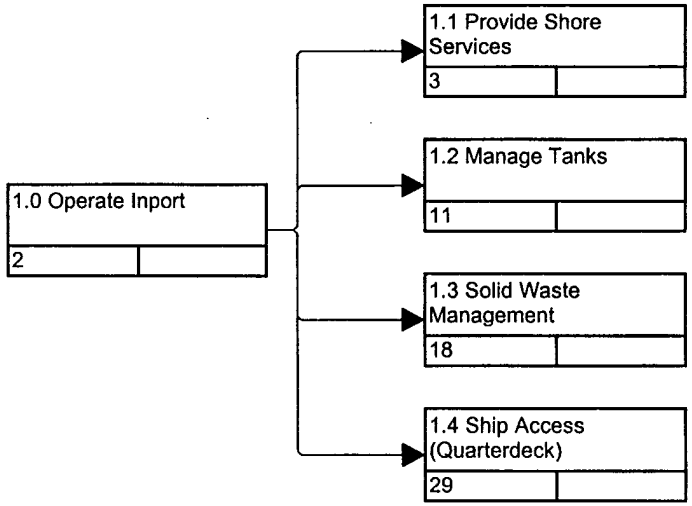
1.0 Operate Inport
2
1.1 Provide Shore Services
3
1.2 Manage Tanks
11
1.3 Solid Waste Management
18
1.4 Ship Access (Quarterdeck)
29

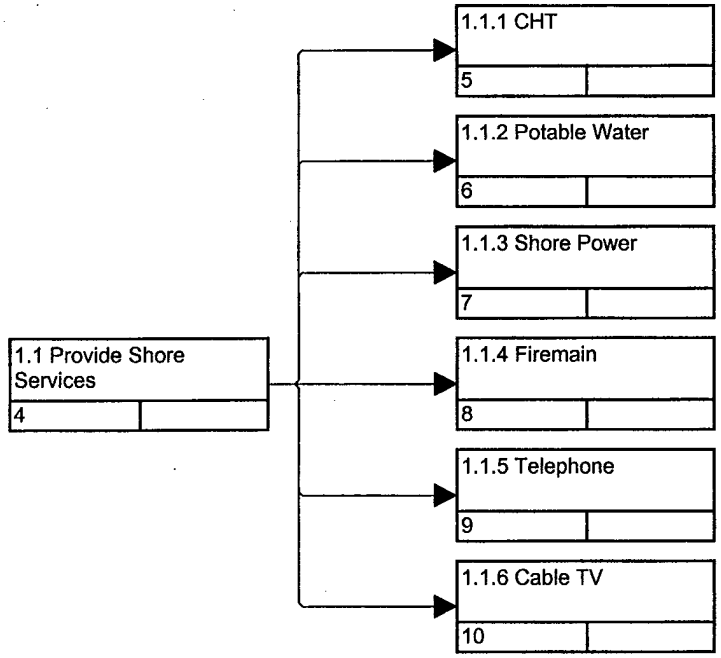
1.1 Provide Shore Services
4
1.1.1 CHT
5
1.1.2 Potable Water
6
1.1.3 Shore Power
7
1.1.4 Firemain
8
1.1.5 Telephone
9
1.1.6 Cable TV
10

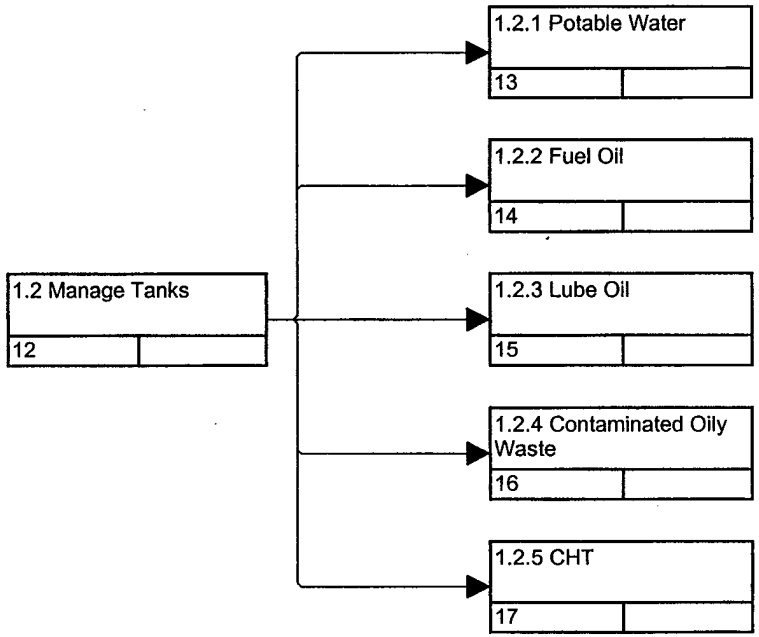
1.2 Manage Tanks
12
1.2.1 Potable Water
13
1.2.2 Fuel Oil
14
1.2.3 Lube Oil
15
1.2.4 Contaminated Oily Waste
16
1.2.5 CHT
17

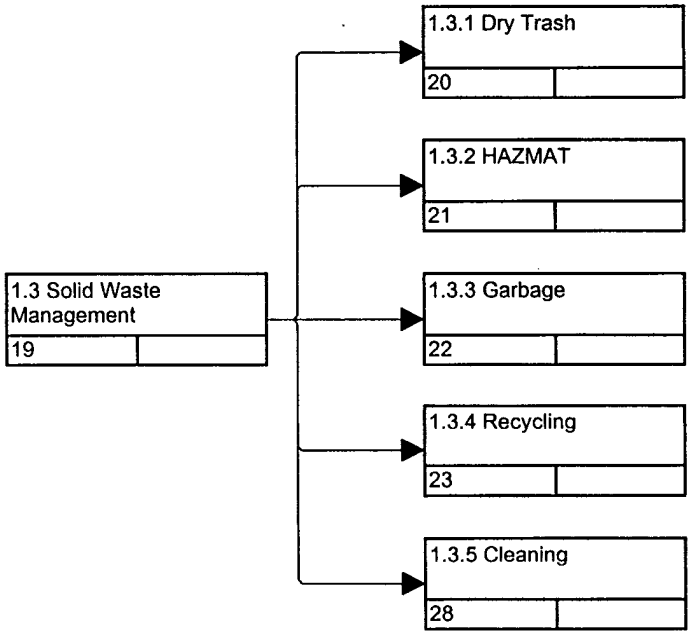
1.3 Solid Waste Management
19
1.3.1 Dry Trash
20
1.3.2 HAZMAT
21
1.3.3 Garbage
22
1.3.4 Recycling
23
1.3.5 Cleaning
28

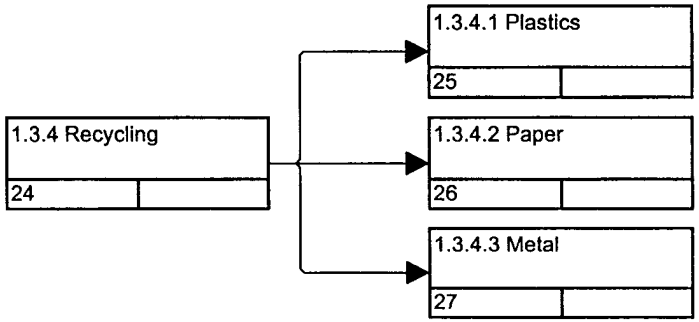
1.3.4 Recycling
24
1.3.4.1 Plastics
25
1.3.4.2 Paper
26
1.3.4.3 Metal
27

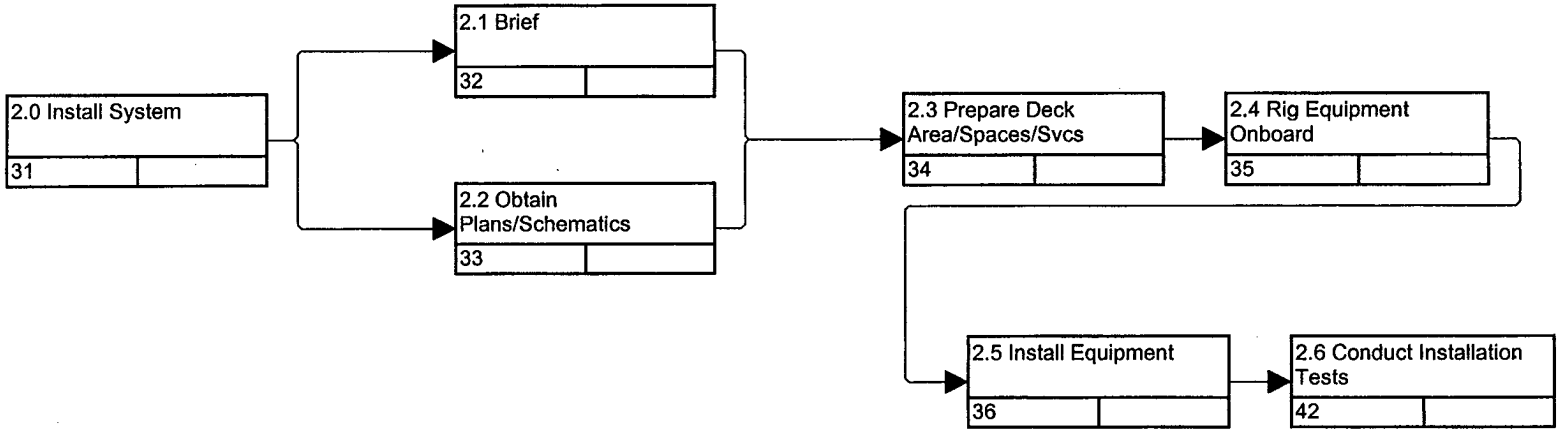
2.0 Install System
31
2.1 Brief
32
2.2 Obtain Plans/Schematics
33
2.3 Prepare Deck Area/Spaces/Svcs
34
2.4 Rig Equipment Onboard
35
2.5 Install Equipment
36
2.6 Conduct Installation Tests
42

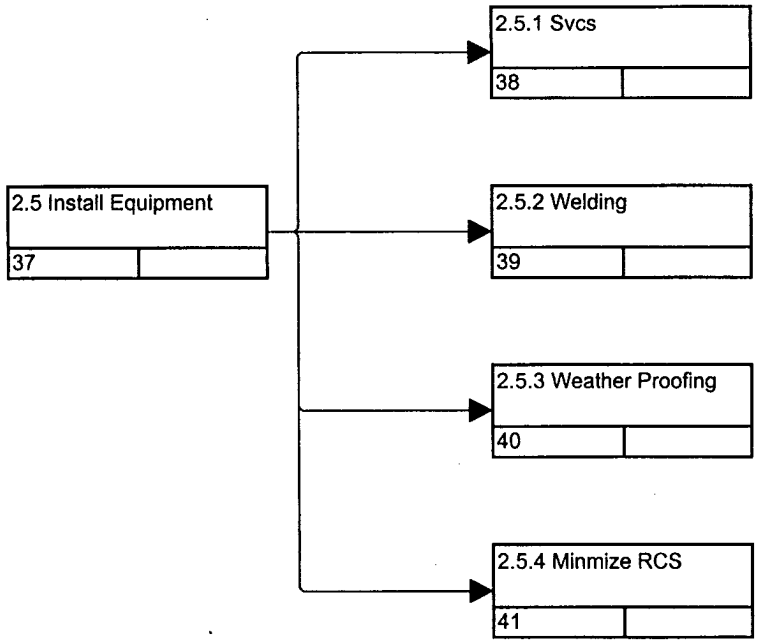
2.5 Install Equipment
37
2.5.1 Svcs
38
2.5.2 Welding
39
2.5.3 Weather Proofing
40
2.5.4 Minmize RCS
41

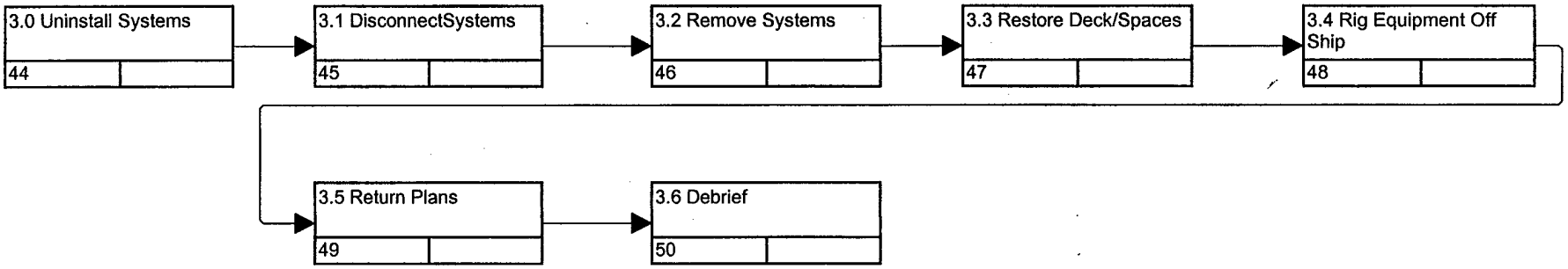
3.0 Uninstall Systems
44
3.1 DisconnectSystems
45
3.2 Remove Systems
46
3.3 Restore Deck/Spaces
47
3.4 Rig Equipment Off Ship
48
3.5 Return Plans
49
3.6 Debrief
50

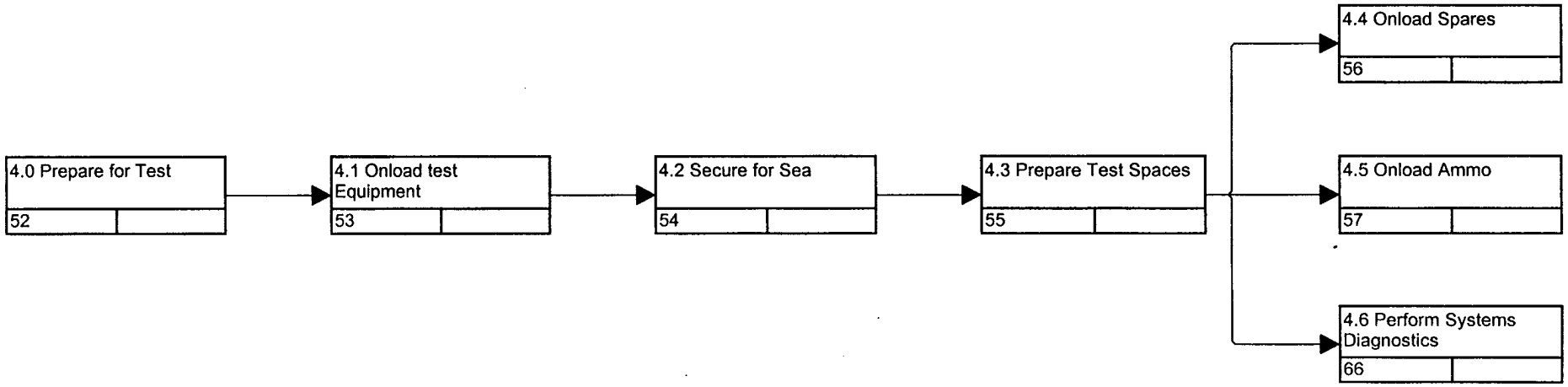
4.0 Prepare for Test
52
4.1 Onload test Equipment
53
4.2 Secure for Sea
54
4.3 Prepare Test Spaces
55
4.4 Onload Spares
56
4.5 Onload Ammo
57
4.6 Perform Systems Diagnostics
66

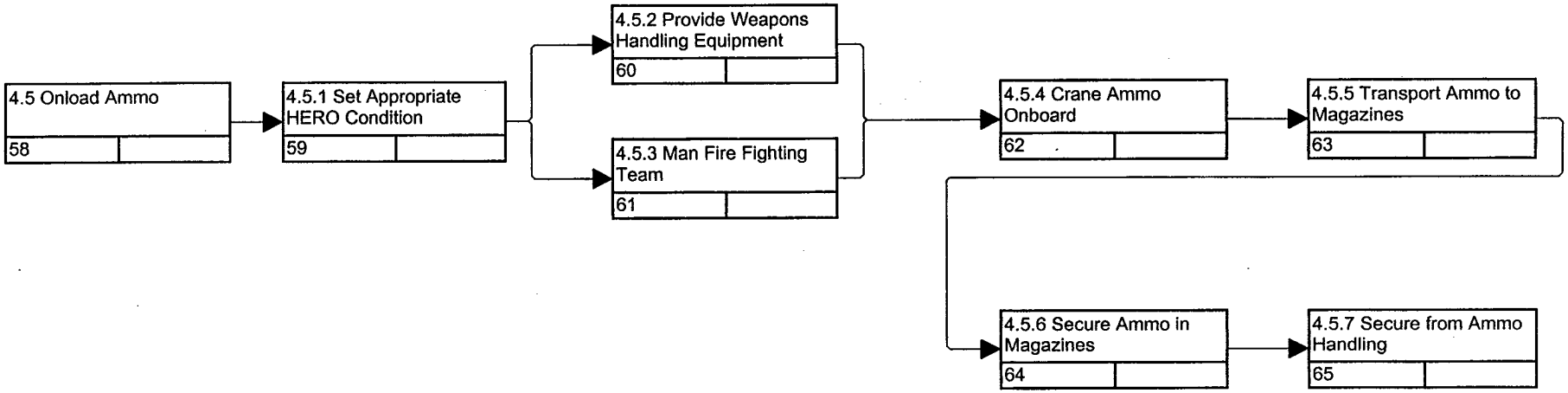
4.5 Onload Ammo
58
4.5.1 Set Appropriate HERO Condition
59
4.5.2 Provide Weapons Handling Equipment
60
4.5.3 Man Fire Fighting Team
61
4.5.4 Crane Ammo Onboard
62
4.5.5 Transport Ammo to Magazines
63
4.5.6 Secure Ammo in Magazines
64
4.5.7 Secure from Ammo Handling
65

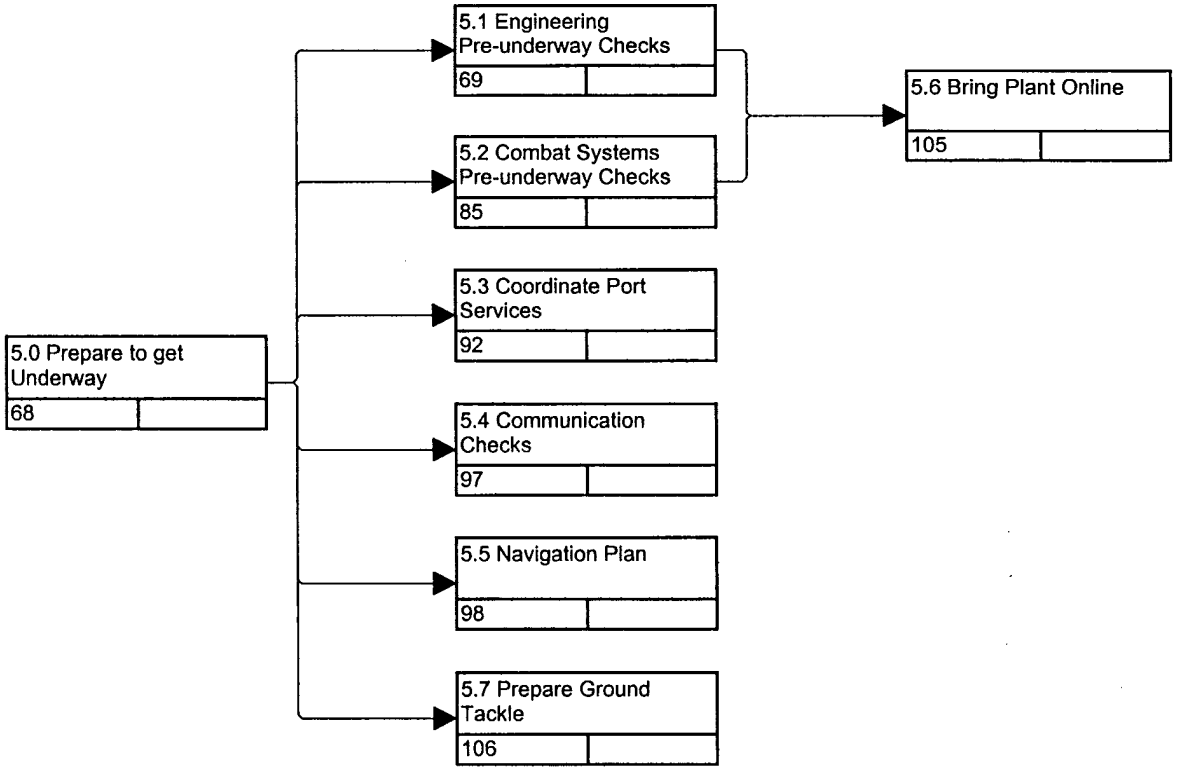
5.0 Prepare to get Underway
68
5.1 Engineering Pre-underway Checks
69
5.2 Combat Systems Pre-underway Checks
85
5.3 Coordinate Port Services
92
5.4 Communication Checks
97
5.5 Navigation Plan
98
5.7 Prepare Ground Tackle
106
5.6 Bring Plant Online
105

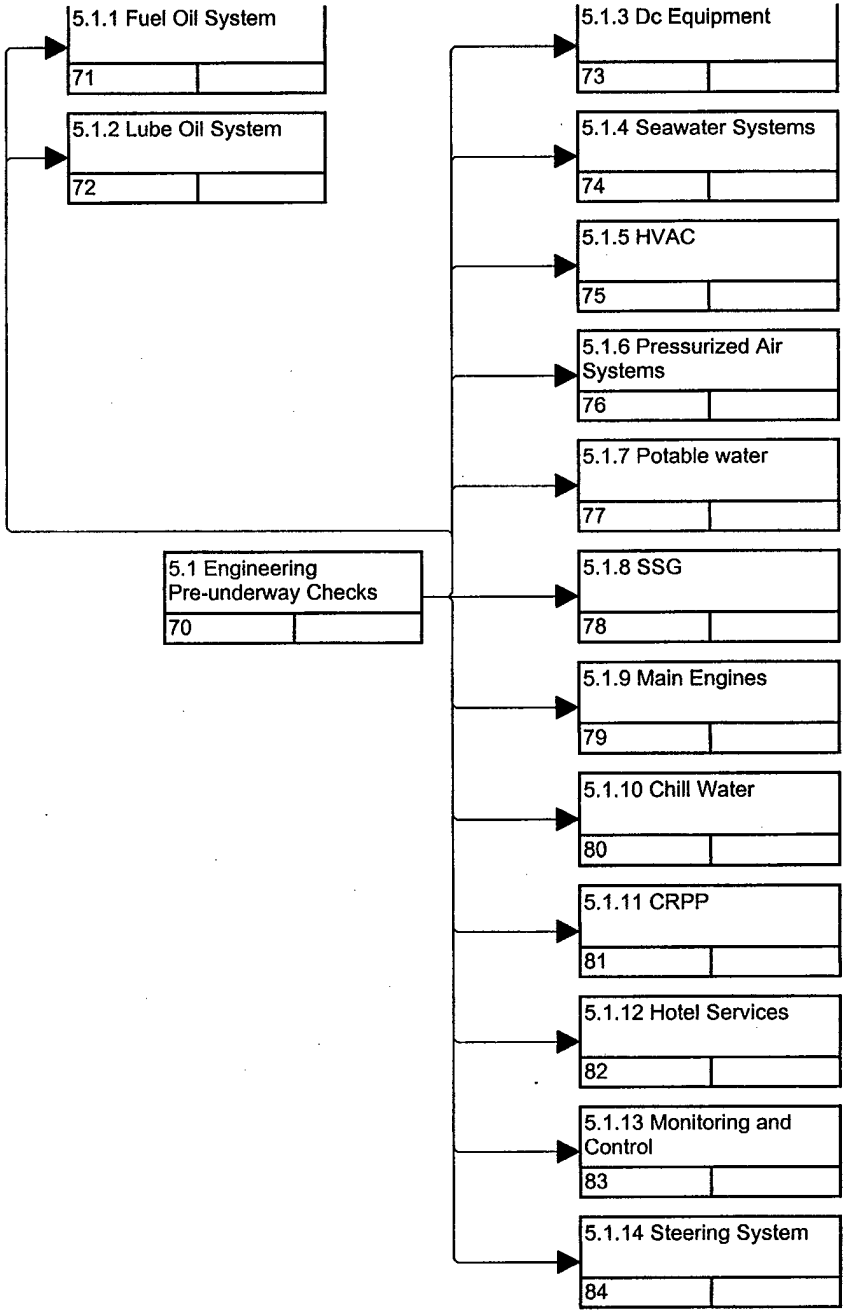
5.1.1 Fuel Oil System
71
5.1.2 Lube Oil System
72
5.1 Engineering Pre-underway Checks
70
5.1.3 Dc Equipment
73
5.1.4 Seawater Systems
74
5.1.5 HVAC
75
5.1.6 Pressurized Air Systems
76
5.1.7 Potable water
77
5.1.8 SSG
78
5.1.9 Main Engines
79
5.1.10 Chill Water
80
5.1.11 CRPP
81
5.1.12 Hotel Services
82
5.1.13 Monitoring and Control
83
5.1.14 Steering System
84

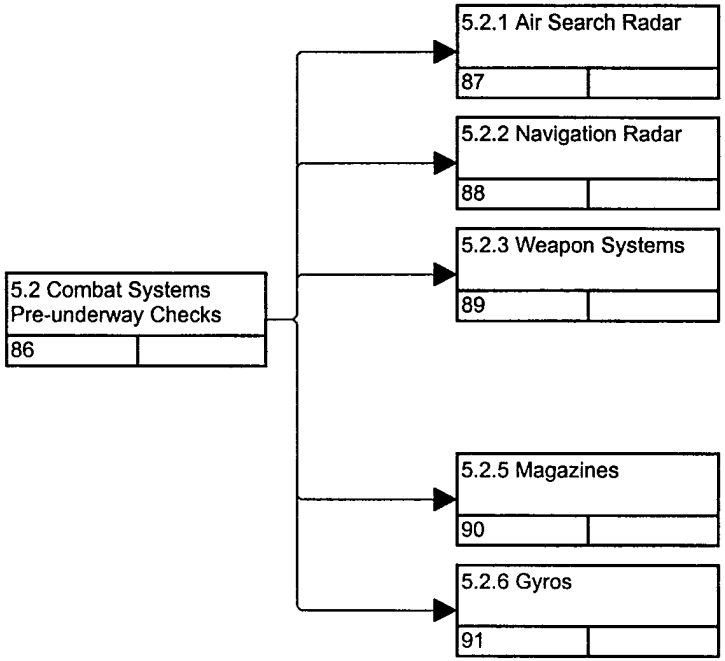
5.2 Combat Systems Pre-underway Checks
86
5.2.1 Air Search Radar
87
5.2.2 Navigation Radar
88
5.2.3 Weapon Systems
89
5.2.5 Magazines
90
5.2.6 Gyros
91

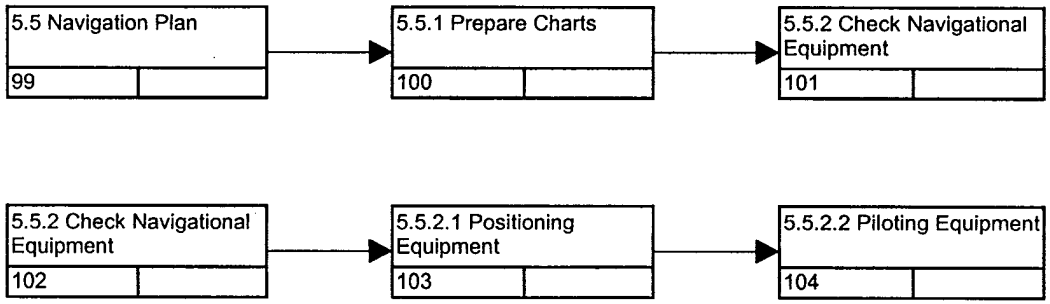
5.5 Navigation Plan
99
5.5.1 Prepare Charts
100
5.5.2 Check Navigational Equipment
101
5.5.2 Check Navigational Equipment
102
5.5.2.1 Positioning Equipment
103
5.5.2.2 Piloting Equipment
104

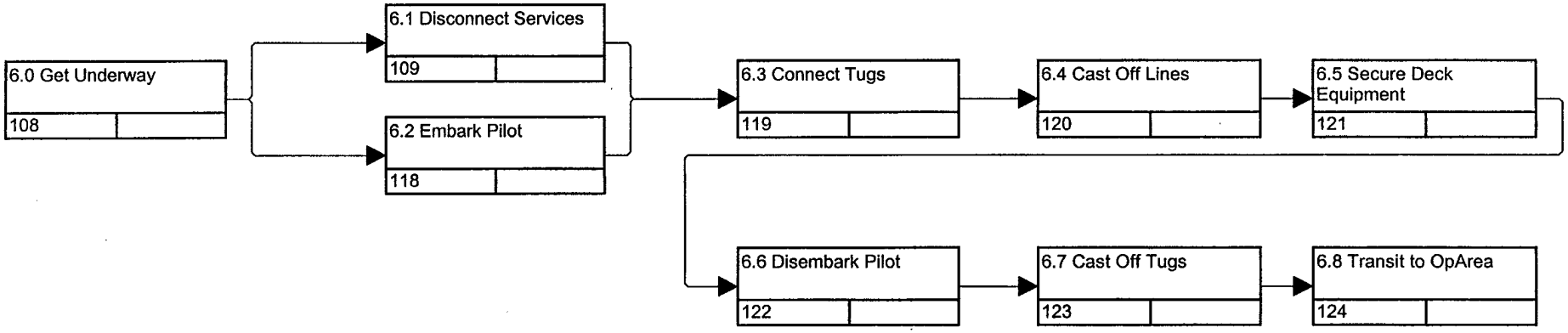
6.0 Get Underway
108
6.1 Disconnect Services
109
6.2 Embark Pilot
118
6.3 Connect Tugs
119
6.4 Cast Off Lines
120
6.5 Secure Deck Equipment
121
6.6 Disembark Pilot
122
6.7 Cast Off Tugs
123
6.8 Transit to OpArea
124

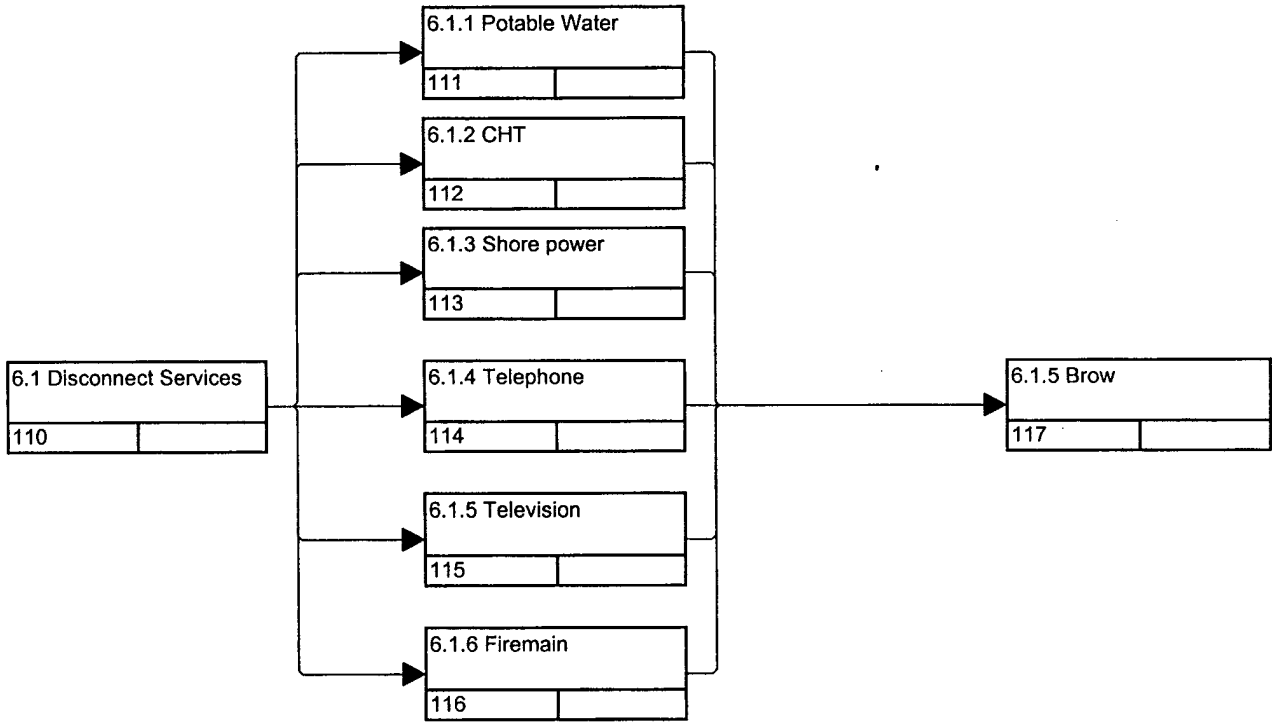
6.1 Disconnect Services
110
6.1.1 Potable Water
111
6.1.2 CHT
112
6.1.3 Shore power
113
6.1.4 Telephone
114
6.1.5 Television
115
6.1.6 Firemain
116
6.1.5 Brow
117

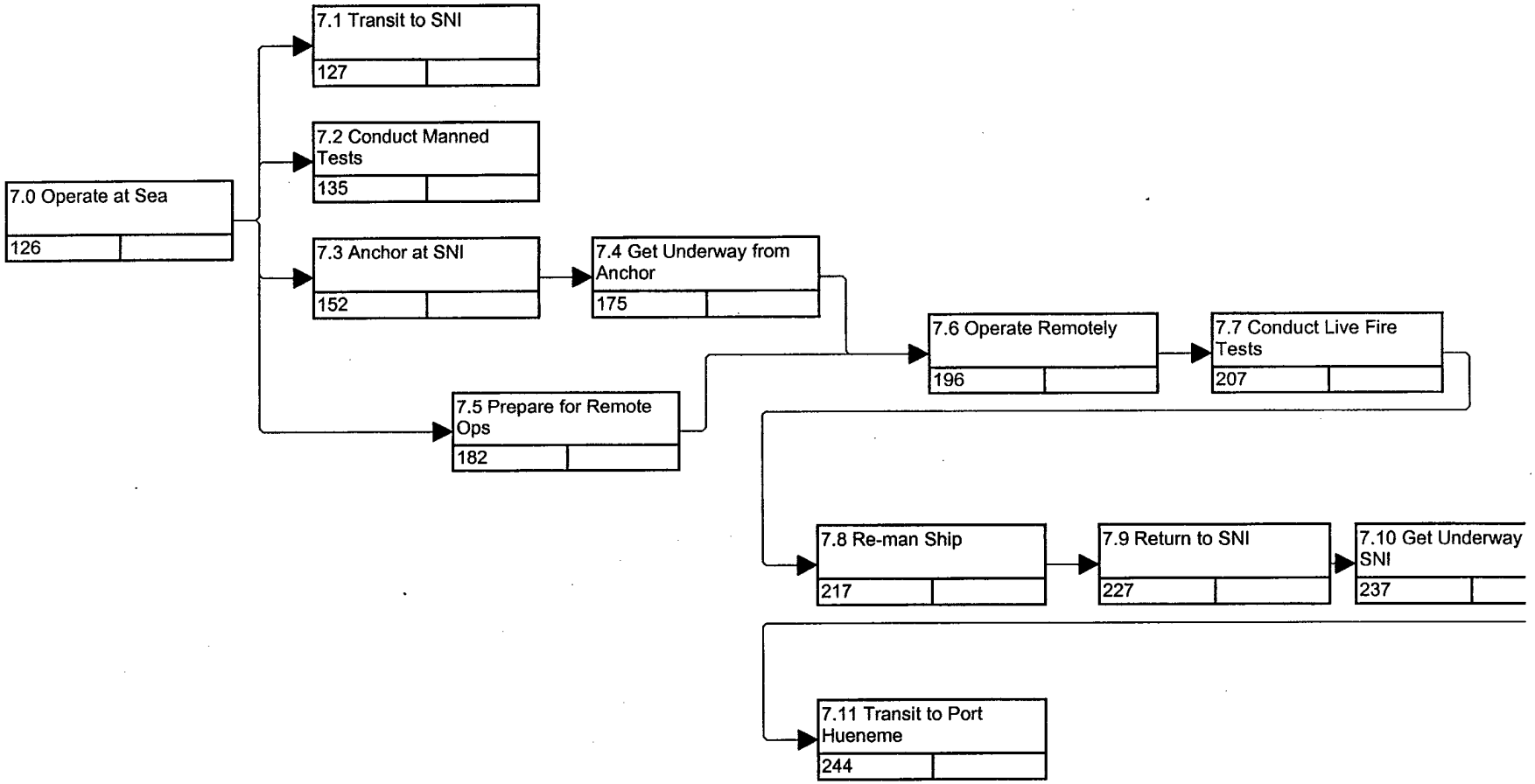
7.0 Operate at Sea
126
7.1 Transit to SNI
127
7.2 Conduct Manned Tests
135
7.3 Anchor at SNI
152
7.4 Get Underway from Anchor
175
7.5 Prepare for Remote Ops
182
7.6 Operate Remotely
196
7.7 Conduct Live Fire Tests
207
7.8 Re-man Ship
217
7.9 Return to SNI
227
7.10 Get Underway SNI
237
7.11 Transit to Port Hueneme
244

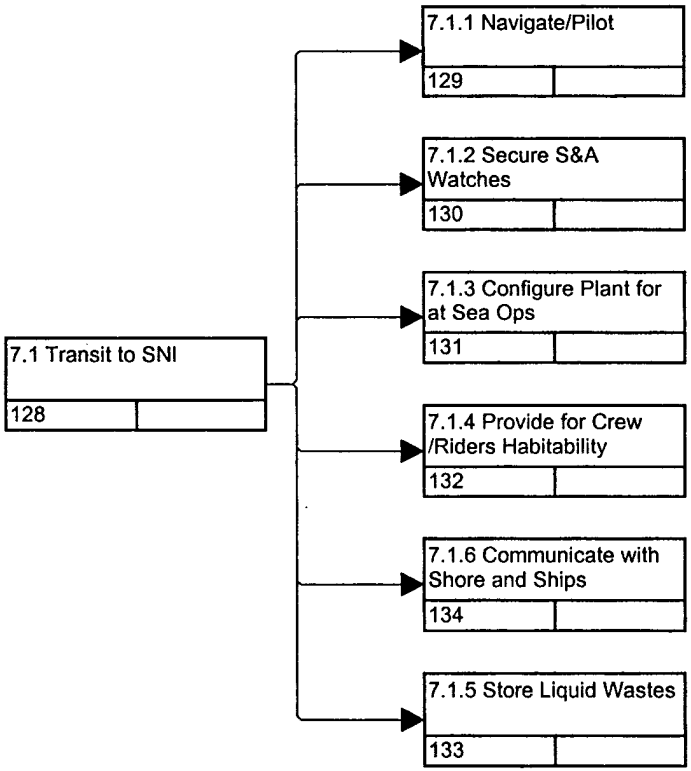
7.1 Transit to SNI
128
7.1.1 Navigate/Pilot
129
7.1.2 Secure S&A Watches
130
7.1.3 Configure Plant for at Sea Ops
131
7.1.4 Provide for Crew /Riders Habitability
132
7.1.6 Communicate with Shore and Ships
134
7.1.5 Store Liquid Wastes
133

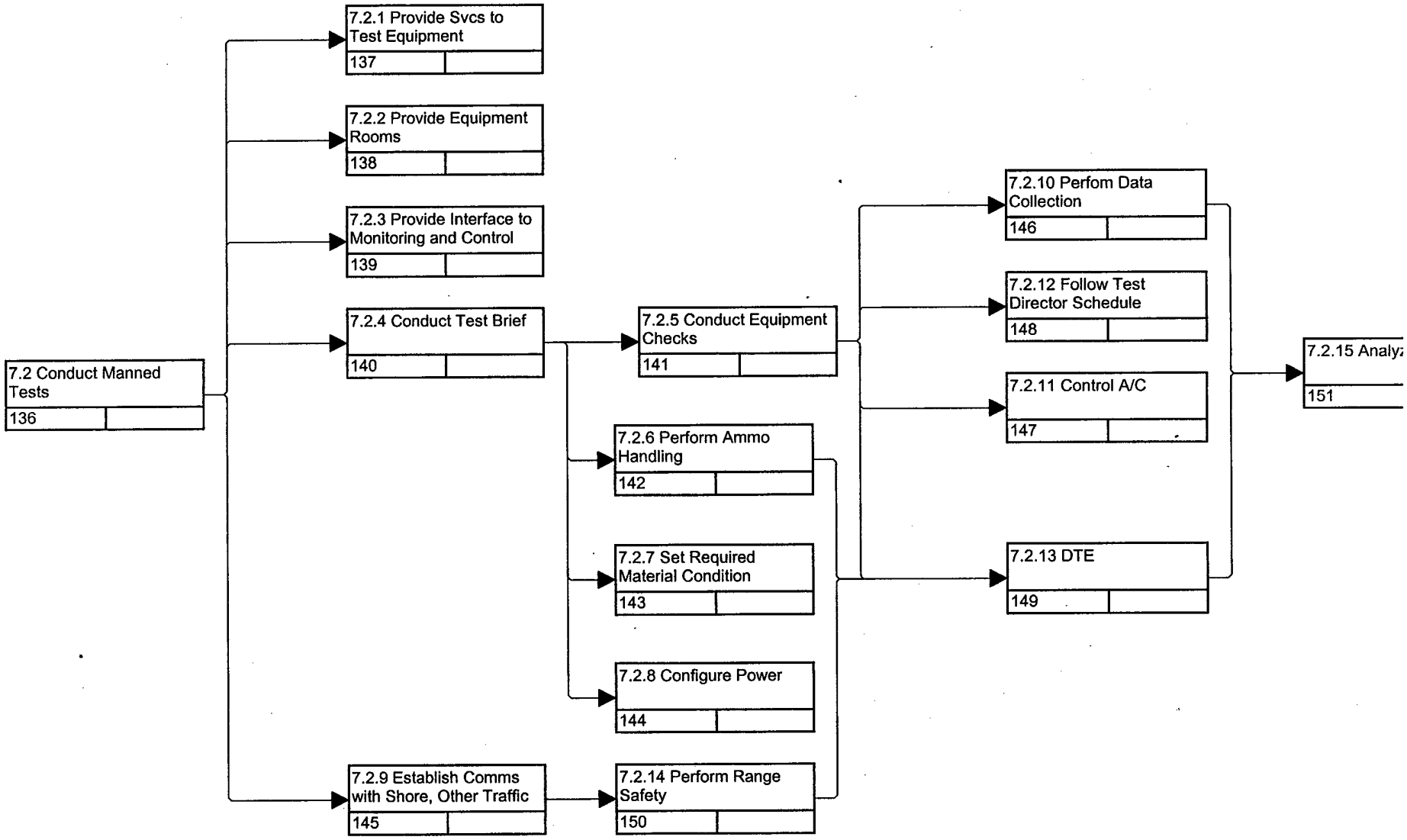
7.2 Conduct Manned Tests
136
7.2.1 Provide Svcs to Test Equipment
137
7.2.2 Provide Equipment Rooms
138
7.2.3 Provide Interface to Monitoring and Control
139
7.2.4 Conduct Test Brief
140
7.2.5 Conduct Equipment Checks
141
7.2.6 Perform Ammo Handling
142
7.2.7 Set Required Material Condition
143
7.2.8 Configure Power
144
7.2.9 Establish Comms with Shore, Other Traffic
145
7.2.14 Perform Range Safety
150
7.2.10 Perfom Data Collection
146
7.2.12 Follow Test Director Schedule
148
7.2.11 Control A/C
147
7.2.13 DTE
149
7.2.15 Analy
151

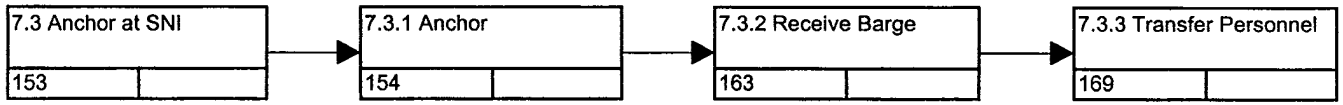
7.3 Anchor at SNI
153
7.3.1 Anchor
154
7.3.2 Receive Barge
163
7.3.3 Transfer Personnel
169

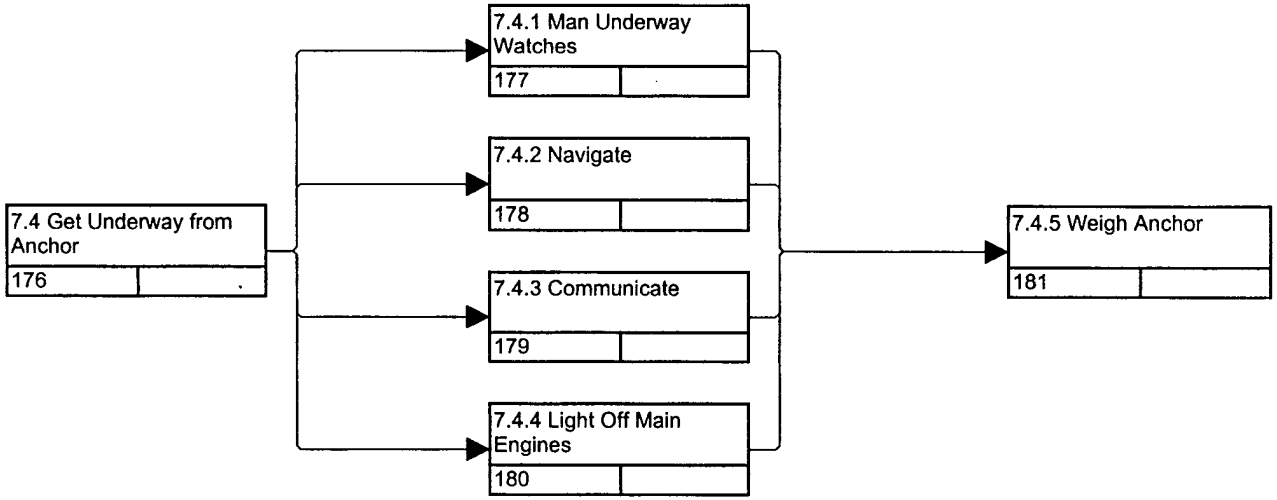
7.4 Get Underway from Anchor
176
7.4.1 Man Underway Watches
177
7.4.2 Navigate
178
7.4.3 Communicate
179
7.4.4 Light Off Main Engines
180
7.4.5 Weigh Anchor
181

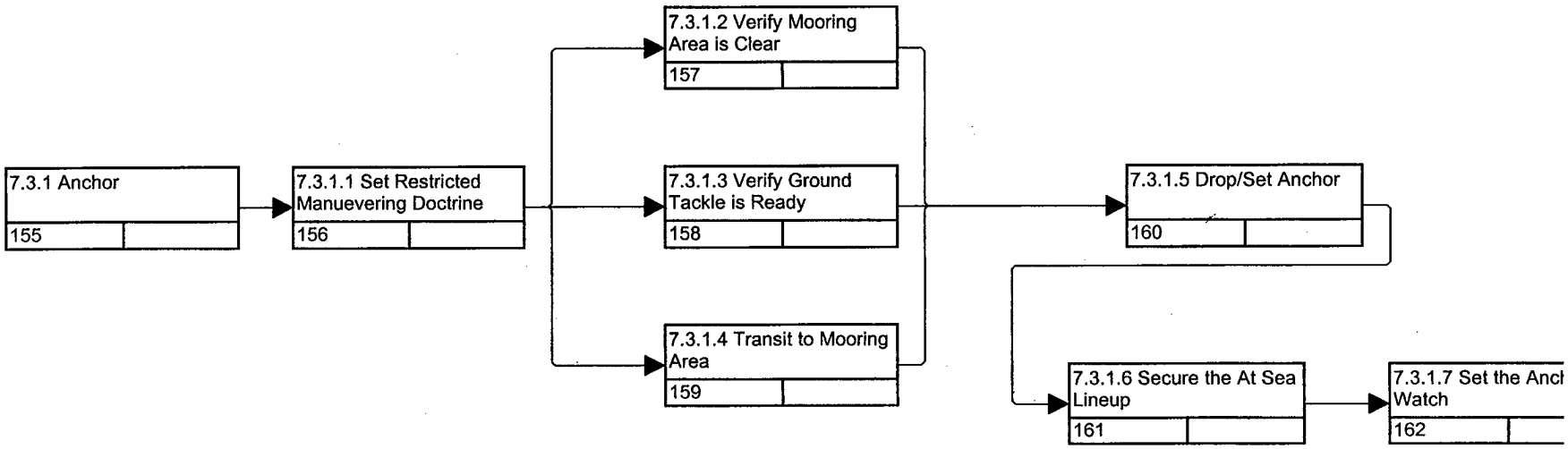
7.3.1 Anchor
155
7.3.1.1 Set Restricted Manuevering Doctrine
156
7.3.1.2 Verify Mooring Area is Clear
157
7.3.1.3 Verify Ground Tackle is Ready
158
7.3.1.4 Transit to Mooring Area
159
7.3.1.5 Drop/Set Anchor
160
7.3.1.6 Secure the At Sea Lineup
161
7.3.1.7 Set the Ancl Watch
162

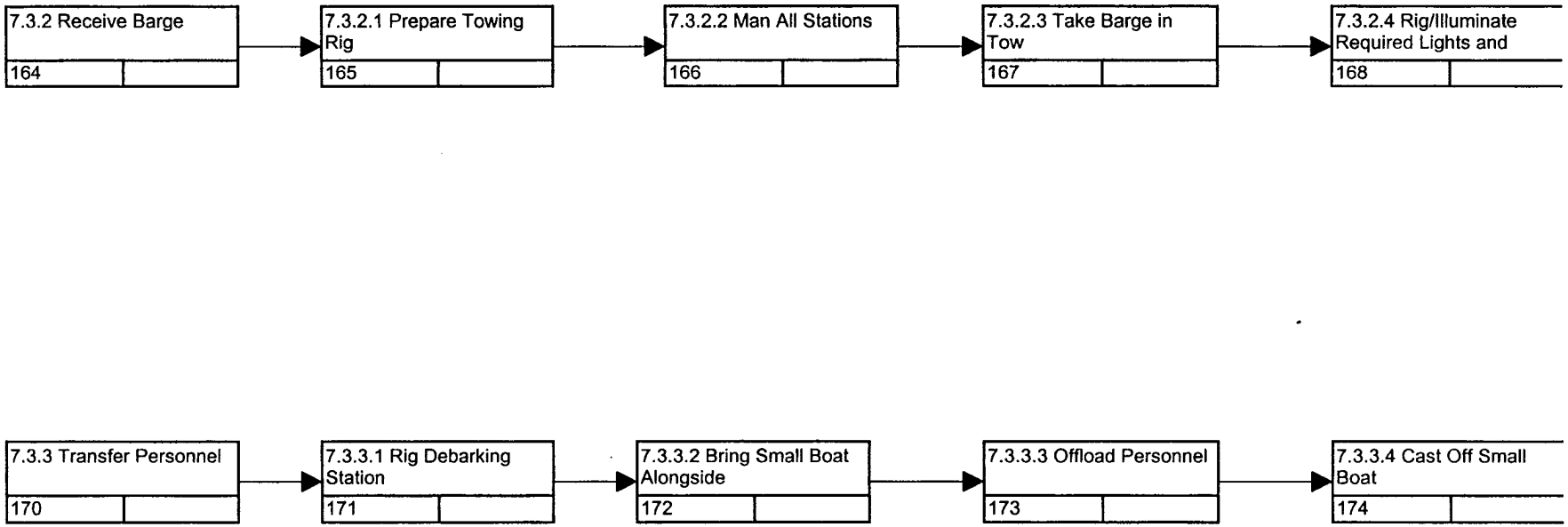
7.3.2 Receive Barge
164
7.3.2.1 Prepare Towing Rig
165
7.3.2.2 Man All Stations
166
7.3.2.3 Take Barge in Tow
167
7.3.2.4 Rig/Illuminate Required Lights and
168
7.3.3 Transfer Personnel
170
7.3.3.1 Rig Debarking Station
171
7.3.3.2 Bring Small Boat Alongside
172
7.3.3.3 Offload Personnel
173
7.3.3.4 Cast Off Small Boat
174

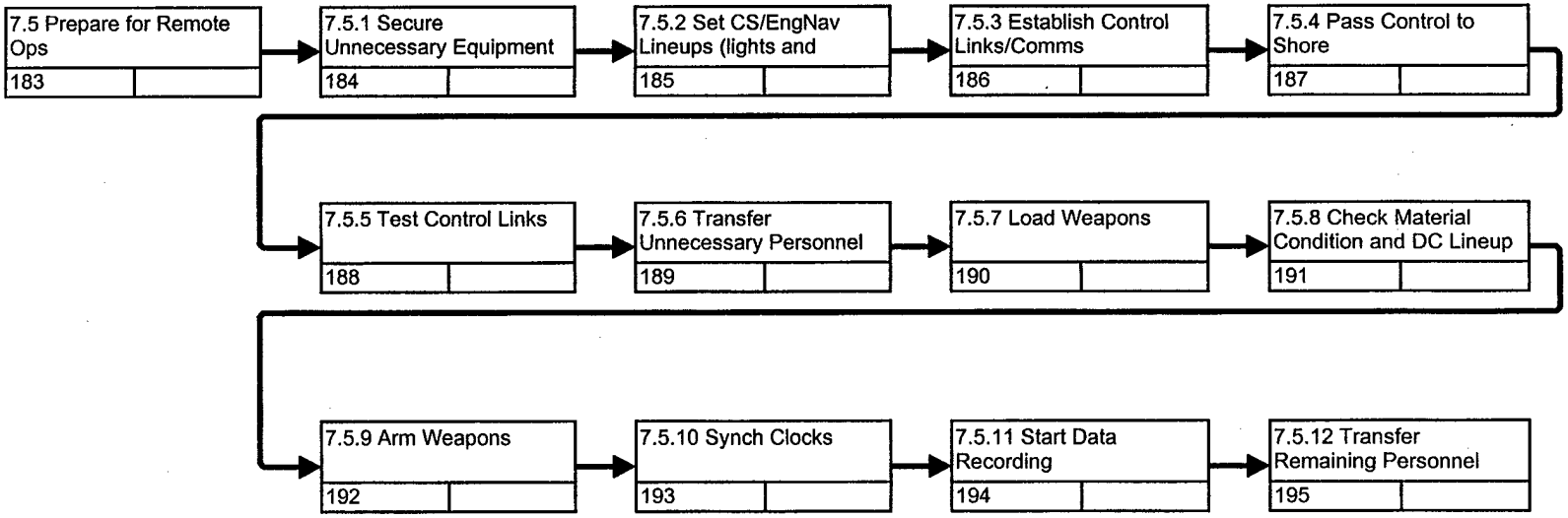
7.5 Prepare for Remote Ops
183
7.5.1 Secure Unnecessary Equipment
184
7.5.2 Set CS/EngNav Lineups (lights and
185
7.5.3 Establish Control Links/Comms
186
7.5.4 Pass Control to Shore
187
7.5.5 Test Control Links
188
7.5.6 Transfer Unnecessary Personnel
189
7.5.7 Load Weapons
190
7.5.8 Check Material Condition and DC Lineup
191
7.5.9 Arm Weapons
192
7.5.10 Synch Clocks
193
7.5.11 Start Data Recording
194
7.5.12 Transfer Remaining Personnel
195

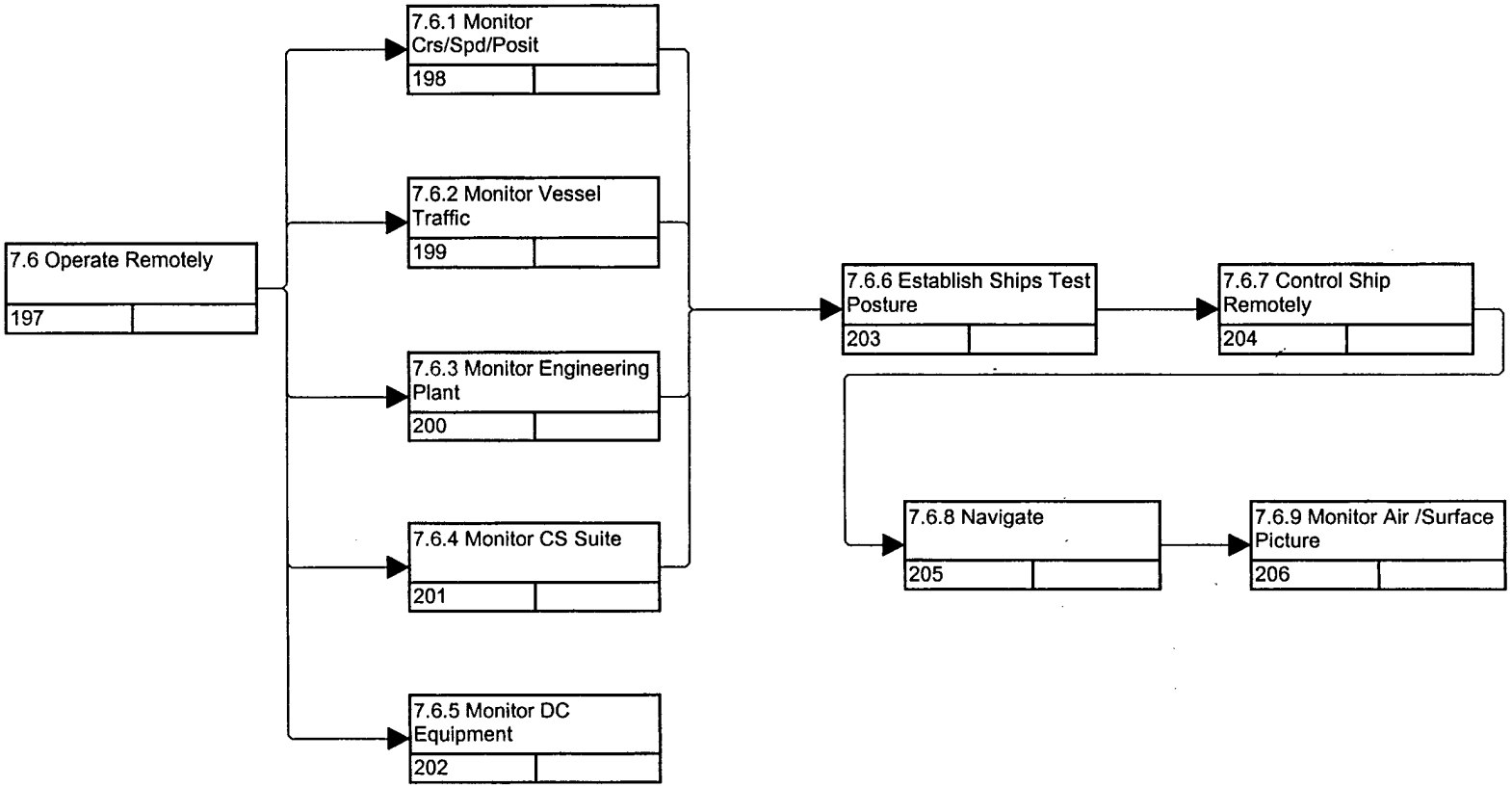
7.6 Operate Remotely
197
7.6.1 Monitor Crs/Spd/Posit
198
7.6.2 Monitor Vessel Traffic
199
7.6.3 Monitor Engineering Plant
200
7.6.4 Monitor CS Suite
201
7.6.5 Monitor DC Equipment
202
7.6.6 Establish Ships Test Posture
203
7.6.7 Control Ship Remotely
204
7.6.8 Navigate
205
7.6.9 Monitor Air /Surface Picture
206

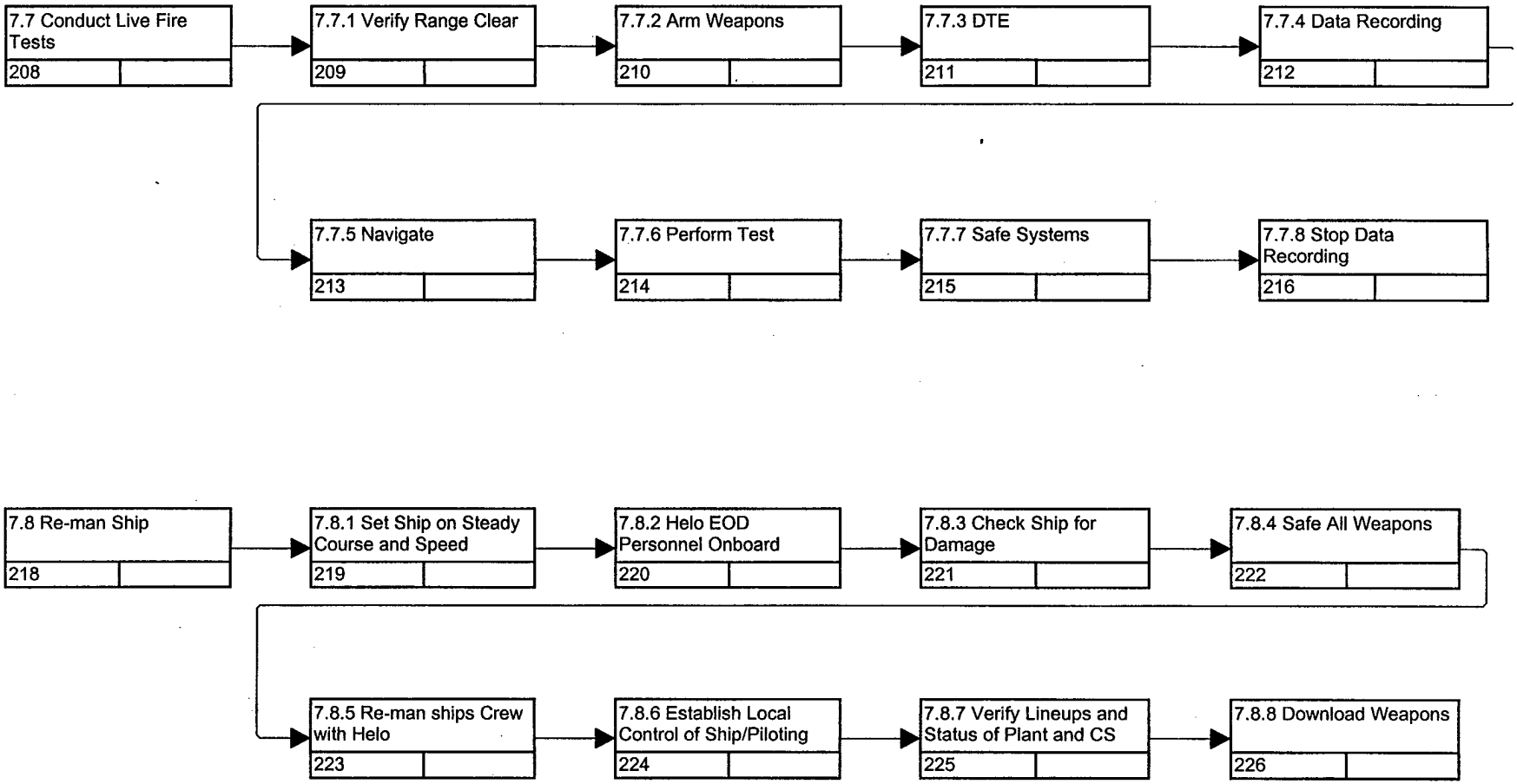
7.7 Conduct Live Fire Tests
208
7.7.1 Verify Range Clear
209
7.7.2 Arm Weapons
210
7.7.3 DTE
211
7.7.4 Data Recording
212
7.7.5 Navigate
213
7.7.6 Perform Test
214
7.7.7 Safe Systems
215
7.7.8 Stop Data Recording
216
7.8 Re-man Ship
218
7.8.1 Set Ship on Steady Course and Speed
219
7.8.2 Helo EOD Personnel Onboard
220
7.8.3 Check Ship for Damage
221
7.8.4 Safe All Weapons
222
7.8.5 Re-man ships Crew with Helo
223
7.8.6 Establish Local Control of Ship/Piloting
224
7.8.7 Verify Lineups and Status of Plant and CS
225
7.8.8 Download Weapons
226

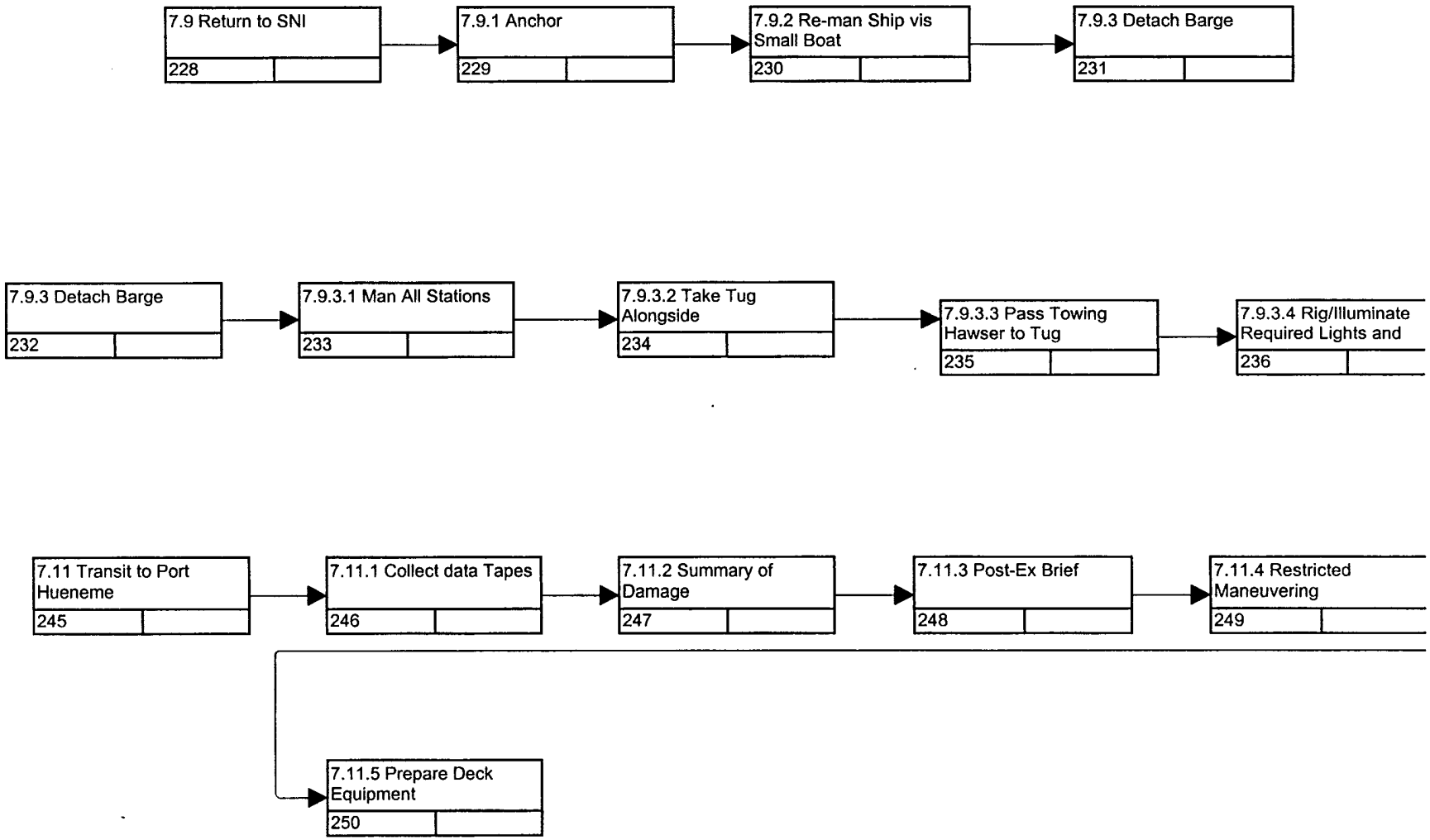
7.9 Return to SNI
228
7.9.1 Anchor
229
7.9.2 Re-man Ship vis Small Boat
230
7.9.3 Detach Barge
231
7.9.3 Detach Barge
232
7.9.3.1 Man All Stations
233
7.9.3.2 Take Tug Alongside
234
7.9.3.3 Pass Towing Hawser to Tug
235
7.9.3.4 Rig/Illuminate Required Lights and
236
7.11 Transit to Port Hueneme
245
7.11.1 Collect data Tapes
246
7.11.2 Summary of Damage
247
7.11.3 Post-Ex Brief
248
7.11.4 Restricted Maneuvering
249
7.11.5 Prepare Deck Equipment
250

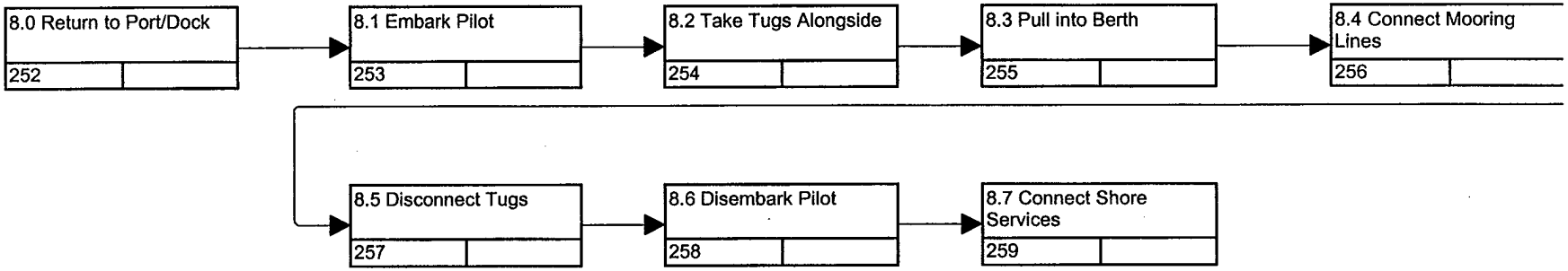
8.0 Return to Port/Dock
252
8.1 Embark Pilot
253
8.2 Take Tugs Alongside
254
8.3 Pull into Berth
255
8.4 Connect Mooring Lines
256
8.5 Disconnect Tugs
257
8.6 Disembark Pilot
258
8.7 Connect Shore Services
259

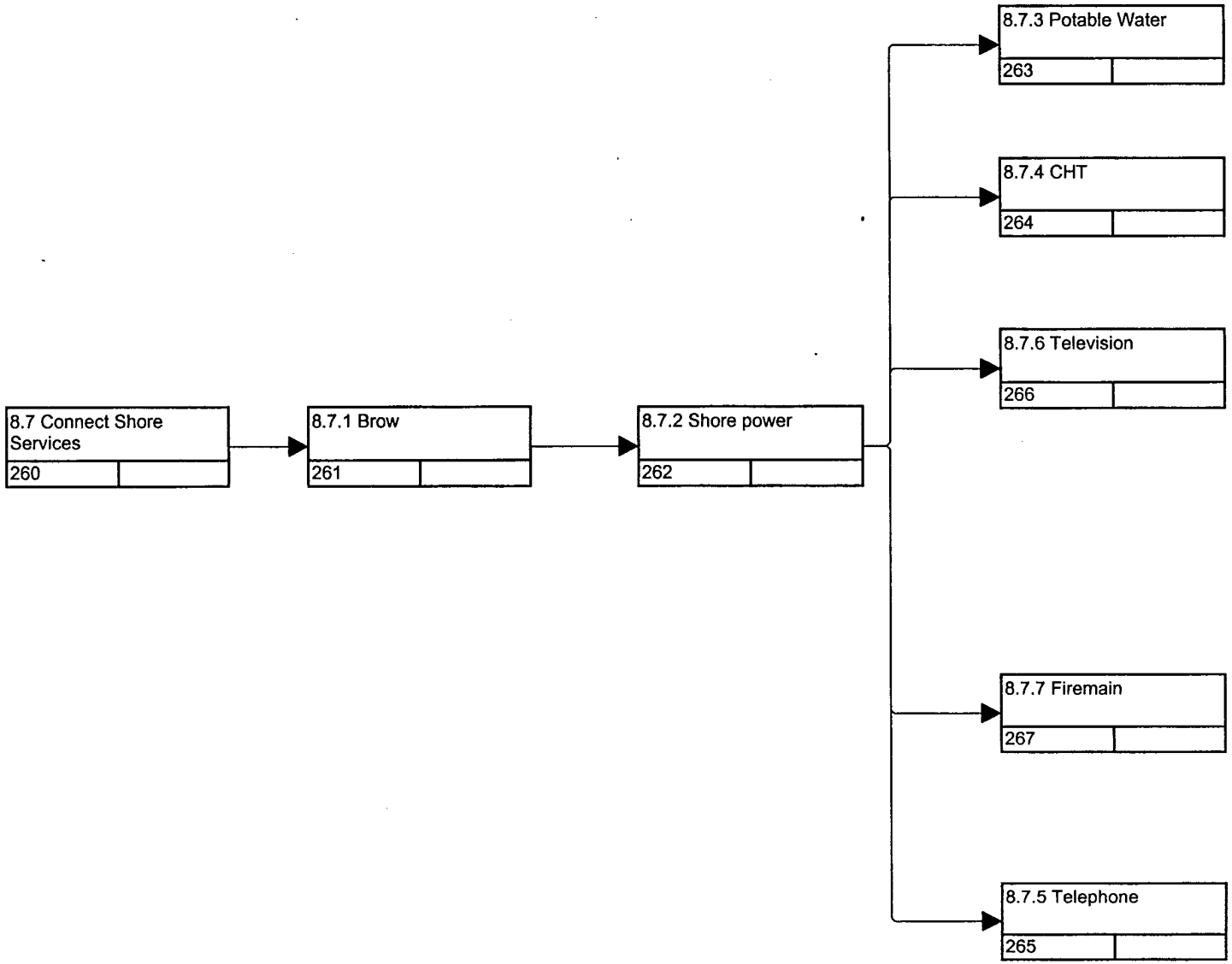
8.7 Connect Shore Services
260
8.7.1 Brow
261
8.7.2 Shore power
262
8.7.3 Potable Water
263
8.7.4 CHT
264
8.7.6 Television
266
8.7.7 Firemain
267
8.7.5 Telephone
265

Appendix E

Operational Requirements Document

OPERATIONAL REQUIREMENTS DOCUMENT
FOR
SURFACE WAREFARE TEST SHIP (SWTS)

1. General Description of Operational Capability.

The SWTS, a modified SPRUANCE Class destroyer with VLS, shall be a versatile, cost-effective test and evaluation (T&E) platform capable of supporting developmental and operational testing of a variety of sensor and weapon systems and associated support elements. The SWTS shall be capable of efficiently supporting system installation, integration and testing inport. The SWTS shall efficiently support testing of installed systems in an at-sea environment under both normal underway conditions and, most importantly, in live-fire engagement scenarios against realistic threat targets to include full up, high speed anti-ship missiles. To ensure the safety of personnel, the SWTS shall be capable of unmanned remote operation of ship control and combat systems during live-fire testing. In addition to self defense weapon systems testing, the SWTS shall be versatile and adaptable to support testing of a variety of current and future shipboard systems and equipment over its anticipated fifteen-year service life. Interest has been shown in using SWTS as a Hull, Mechanical, and Engineering (HM&E) test platform.

2. Threat.

Radially inbound, high-speed Anti-Ship cruise missiles are the primary threat. The SWTS will be exercised in realistic scenarios, using real ordnance, without live warheads. SWTS may sustain damage by way of blast, shrapnel, fuel ignition, and airborne debris impact.

3. Shortcomings of Existing Systems.

The Navy prevents damage to ships and their crews by imposing a 2.5 NM minimum Closest Point of Approach (CPA) restriction on missiles and drones fired towards commissioned ships. Self Defense sensor and weapon systems require smaller CPAs for adequate testing.

For the past five years, the ex-DECATUR has been used as the SDTS; however, ex-DECATUR has many critical flaws:

- Recent ultrasound hull surveys indicate significant hull and tank system deterioration
- 30-40% of the ship's hull below the waterline has lost 50% of its design thickness
- Some fuel oil tanks found to be seeping into adjacent spaces
- Tanking system is suspect.

The ex-DECATUR will require expensive dry-docking for the hull and tank repairs. This extensive maintenance period will be extremely disruptive to the SDTS testing schedule.

Additionally, the ex-DECATUR has characteristic faults that cannot be repaired. It cannot support some of the future sensors and weapons systems that require an appropriate marine testing environment because of insufficient platform area or volume. The ex-DECATUR lacks speed and maneuverability necessary to completely test self defense systems. The speed and maneuverability restrictions also prevent it from operating safely in Sea States of 4+, which are routinely experienced in southern California. The ex-DECATUR's decommissioned steam plants cannot support modern HM&E testing. The ex-DECATUR does not possess a VLS launcher, the standard container and launch platform for naval weapons. It has limited displacement and volume, limited electrical power and high observable signatures and is unable to operate in concert with battlegroups. Finally, it possesses limited facilities for messing and berthing its test crew of 50; experience shows as many as 100 personnel may be required for some tests.

4. Capabilities Required.

a. System Performance.

1) Ship shall have a fifteen-year service life following Initial Operational Capability.
2) Ship shall be capable of 15 knots top sustained speed. The minimum endurance is 12 days, based on a transit from Port Hueneme to Barking Sands, HI.
3) SWTS shall be able to operate safely in Sea State 4 (threshold), sea state 6 (objective).
4) Engineering, Navigation, and Combat Systems shall have remote and local control capability. The remote control systems shall be permanently installed aboard the ship. Ship shall be capable of unmanned operations for 3 hours (threshold) and 8 hours (objective).
5) Ship shall conform to COLREGS.
6) Ship shall provide permanently installed digital and video data recording capability for navigational, sensors and weapons systems and multiple camera installations to record test events and reduce volume of data transmitted ashore.
7) Ship shall provide facilities for infrared (IR) and radio frequency (RF) augmentation to support special test events.
8) Ship shall provide area and volume for installation and de-installation of temporary combat systems weapons and sensors.
9) Ship shall support the testing of:
   a) Active Integrated Electronic Warfare System (AIEWS)
   b) Advance Directed Energy Weapon System
   c) Battle Group Interoperability (BGIO)/ BGI System Integration Tests
   d) Multi-function Radar (MFR)
   e) Rolling Airframe Missile Helicopter, Aircraft, Surface Mode (RAM HAS)
   f) Vertical Launch Enhanced SeaSparrow Missile (ESSM/MK 41 VLS)
   g) AN/SPQ-9B
   h) Infrared Search and Tracking (IRST)

i) DD 21 Technology Related Projects

j) LPD 17 Systems

k) Advanced Tomahawk Weapons Control System (ATWCS)

l) Smart Ship Technology

m) Theater Ballistic Missile Defense (TBMD) Support

n) Naval Surface Fire Support (NSFS)

o) Land Attack Standard Missile (LASM)

p) HM&E Improvements

q) Communications/SATCOM

r) UNREP equipment

s) Inport Refueling

10) Ship shall support the simultaneous installation and testing of the Ship Self Defense System Mk II (LPD-17 configuration plus the SPS-49) and the most limiting of the systems listed above. (Mounts, electrical generating capacity (including 400 Hz), air conditioning, chilled water, combat data system interface, and other auxiliary services)

11) Ship shall provide gyro and stable element for heading and vertical reference inputs.

12) Ship shall provide safe utility/range boat access to accomplish transfer of personnel and materials.

13) Ship shall have the ability to launch and recover Jet Ranger and Long Ranger helicopter.

14) SWTS shall have rescue boat launching capability.

15) Ship shall conduct towing operations when operating with a target barge.

16) The Radar Cross Section of the SWTS shall have a Radar Cross Section less than 100% (threshold) or 10% (objective) of the ex-DECATUR.

17) Ship shall be able to support continuous operations at sea for 12 days for a combined crew and embarked test project personnel of 150.

18) The ship shall provide berthing accommodations for twelve females.

19) Ship shall provide automatic monitoring/ship control systems (smartship technology) to reduce crew size. Crew goals: HM&E 33, CS 13 (threshold).

20) Ship shall have safety and damage control systems and equipment. All spaces subject to threat of fire will have remote monitoring and be protected with remotely (off-ship) activated fire suppression.

21) Systems shall have the ability to secure power remotely (off-ship).

22) Ship stability shall be within standard values for the DD 963 class.

23) Ship shall conduct corrosion suppression IAW current Navy HM&E standards.

24) Ship shall berth at Naval Construction Battalion Center (NCBC), Port Hueneme, CA during all expected tide conditions.

25) All ship services will be electric, eliminating the use of service steam.

26) One Engineroom shall be used as an HM&E test platform.

b. Logistics and Readiness.

The test ship and systems readiness must support testing according to an annual schedule. Logistics support will be managed by Port Hueneme Division Naval Surface Warfare Center (PHD NSWC). The existing Navy supply system will be used to support Navy systems and equipment. Commercial vendors will be used for supporting commercial off-the-shelf (COTS) systems and equipment. Ship will be berthed at Naval Construction Battalion Center (NCBC), Port Hueneme, CA. Underway replenishment systems will not be required unless installed for specific UNREP equipment testing.

c. Other System Characteristics.

The cost of conversion shall not exceed $5.969M (objective) and $25M (threshold) using a Class F estimate. The annual cost of operations shall not exceed $3.894M + TBD CS costs (Class F estimate).

5. Program Support.

a. Maintenance Planning.

NSWC PHD shall schedule maintenance availabilities in their annual schedule to include shipyard and docking periods. A reduced crew of contractors shall conduct SWTS operations, maintenance, and repair. On board repair facilities and parts storerooms shall be provided. Contractor crews shall perform maintenance with naval supply systems support for Navy systems and commercial parts support for COTS systems. Program sponsors shall maintain temporary systems.

b. Support Equipment.

NCBC Port Hueneme shall provide all hotel and pier services. PHD NSWC shall provide on site ship management for Hull, Mechanical, and Electrical (HM&E) systems and combat systems. Support equipment for Navy systems shall be provided to contract crew for routine maintenance. The contractor shall provide commercial test equipment for COTS systems. Repair shops shall be retained to support onboard maintenance and repair. Storerooms shall be maintained onboard for maintenance and repair.

c. Human Systems Integration.

The ship shall maintain Navy standards for Human Systems Integration. Ship systems shall be automated to reduce crew size to 13 CS and 33 Engineering personnel. The contract crew shall adapt

commercial operating practices. Crew support facilities shall include messing, berthing, recreation, administrative/office and laundry (COTS). Storerooms and reefers shall be located near associated equipment/facilities to ease manpower requirements. Elevators shall be maintained to ease manpower requirements.

d. Computer Resources.

Combat systems shall be operated on an advanced open-architecture system either currently in use or near IOC. Open architecture shall allow rapid weapon and sensor integration, weapon systems modifications and incorporation of remote control systems. Ship shall provide compartments fitted for supporting temporary computer/electronics equipment associated with test data collection. These compartments shall be easily accessible from the main deck.

e. Other Logistics Considerations.

Contractors shall operate the ship at sea and operate and maintain HM&E systems.

f. Command, Control, Communications, Computers, and Intelligence.

IT-21 or equivalent program guidelines shall be followed. Combat System Remote Control System and Ship Control Remote Control System shall interface with the installed Combat Data System. Basic communication capability with fleet units will be maintained for battlegroup interoperability testing.

g. Transportation and Basing.

Ship shall be berthed at Naval Construction Battalion Center (NCBC), Port Hueneme, CA.

h. Standardization, Interoperability, and Commonality.

The ship shall maintain the ability to communicate and exchange data with fleet units to allow for battle group interoperability testing. Systems and components installed during conversion will be chosen to maximize commonality with remaining installed items unless a lifecycle cost analysis demonstrates a significant advantage to using a different item.

i. Mapping, Charting, and Geodesy Support.

Advanced navigation techniques shall be integrated with the Combat Data System and remote control system. The advanced navigation system shall not require MCG support beyond that provided with specific systems or already in existence.

j. **Environmental Support.**

Environmental compliance must be highlighted. Environmental equipment shall be installed for collection of trash, plastics and other recyclables. Oil containment shall be maintained due to "close to shore" operating environment.

6. **Force Structure.**

One SWTS is required.

7. **Schedule Considerations.**

Ex-DECATUR has 2-3 years of remaining service life. A replacement ship must be identified within 12-18 months to allow for conversion. Initial operability and capability to support future test projects must occur within the next 24-36 months. Installation/de-installation of equipment will be accomplished pierside in Port Hueneme as dictated by test project schedules and ship's availability. Conversion work will be limited to installation of combat systems, remote control systems, and other essential systems to ensure full performance as a test ship. Installation of combat systems elements will be accomplished in phases dictated by test project requirements, to avoid major near-term budget delays. Once operational, scheduling of ship operations will be centrally managed by PHD NSWC, based on test project priority and availability of funding.

Appendix F

Ship's Drawings

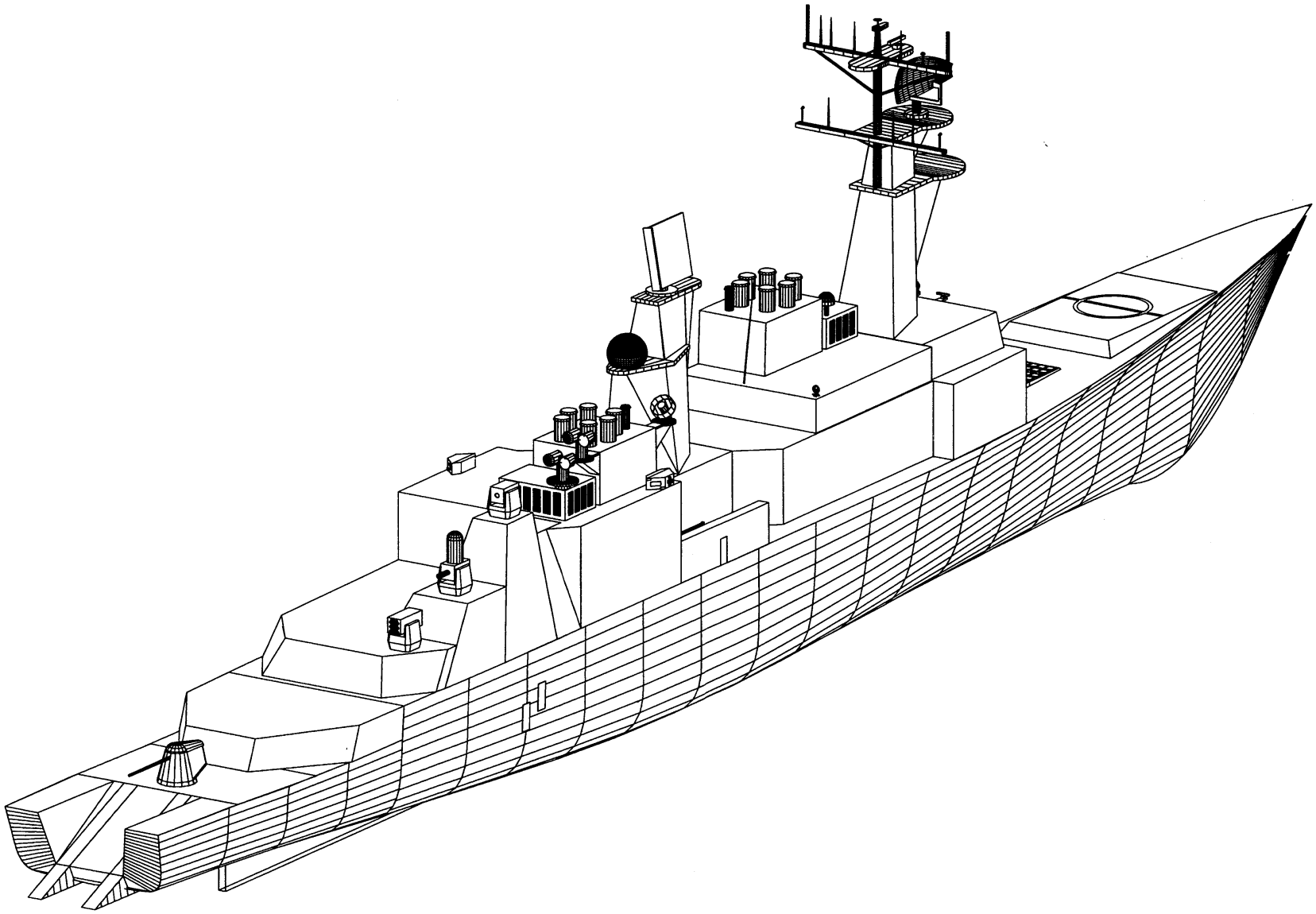

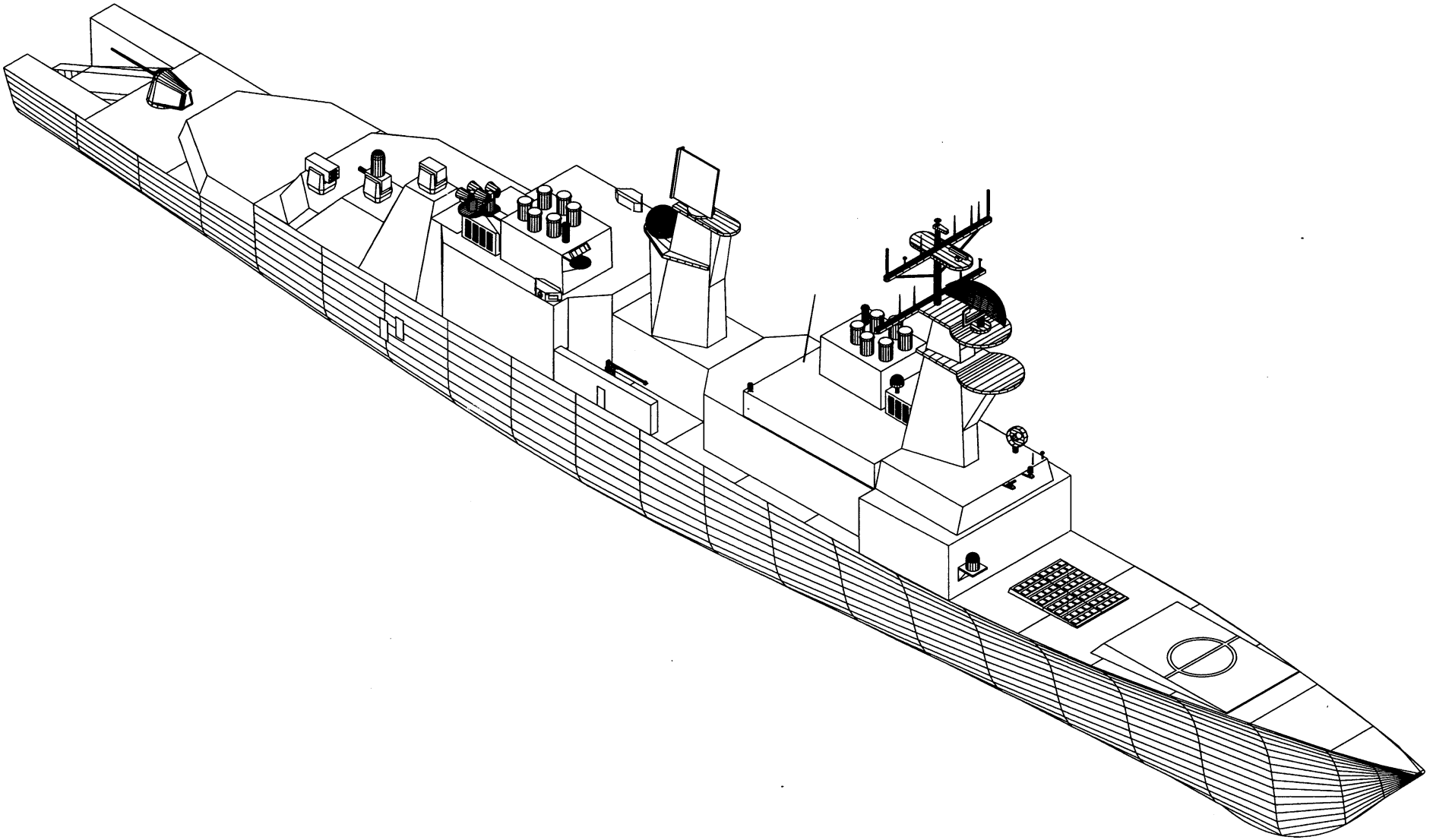

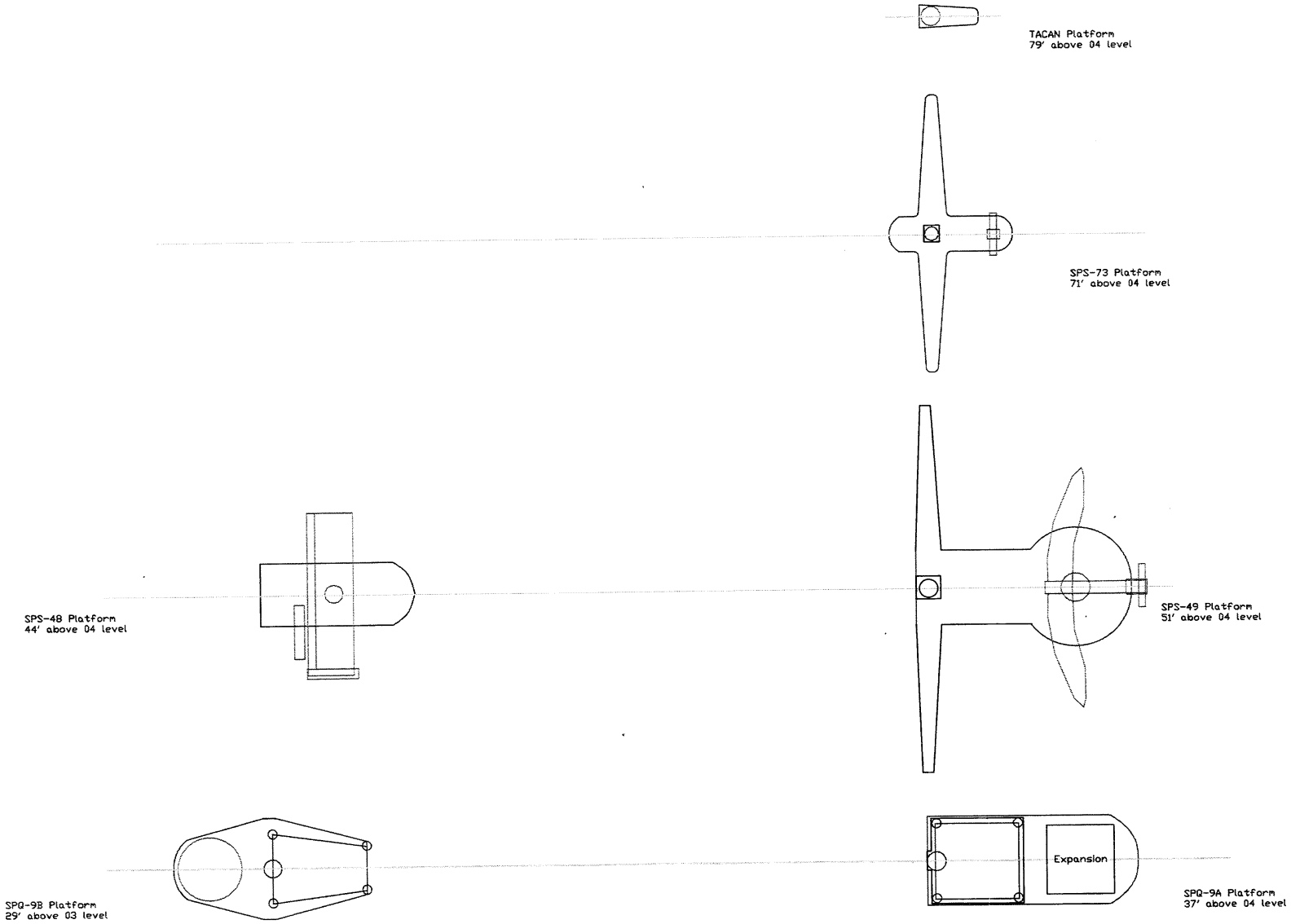
TACAN Platform
79' above 04 level
SPS-73 Platform
71' above 04 level
SPS-48 Platform
44' above 04 level
SPS-49 Platform
51' above 04 level
Expansion
SPQ-9B Platform
29' above 03 level
SPQ-9A Platform
37' above 04 level

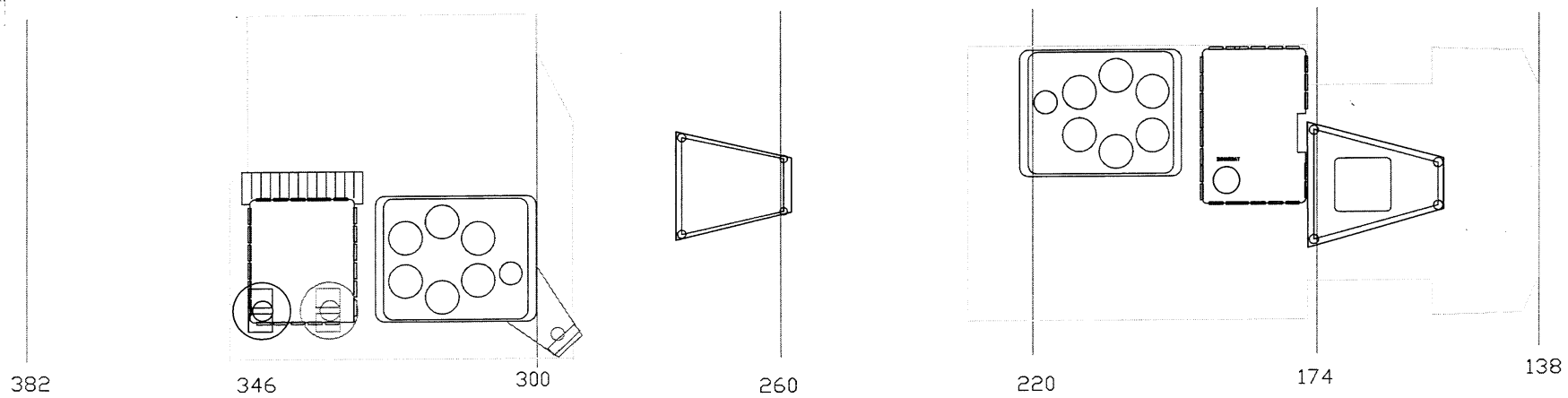
382
346
300
260
220
174
138
05 Level

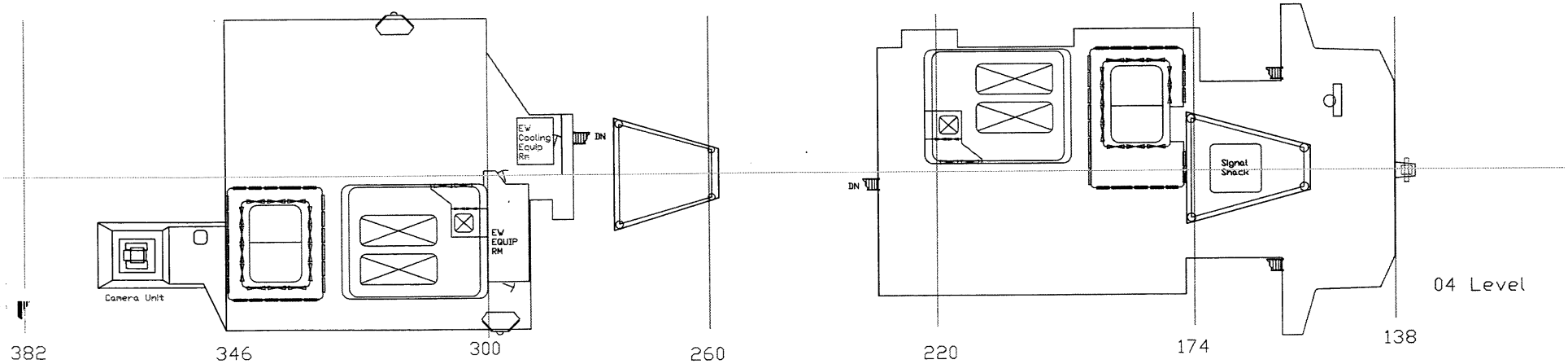
EW Cooling Equip Rm
DN
EW EQUIP RM
Camera Unit
DN
Signal Snack
382
346
300
260
220
174
138
04 Level

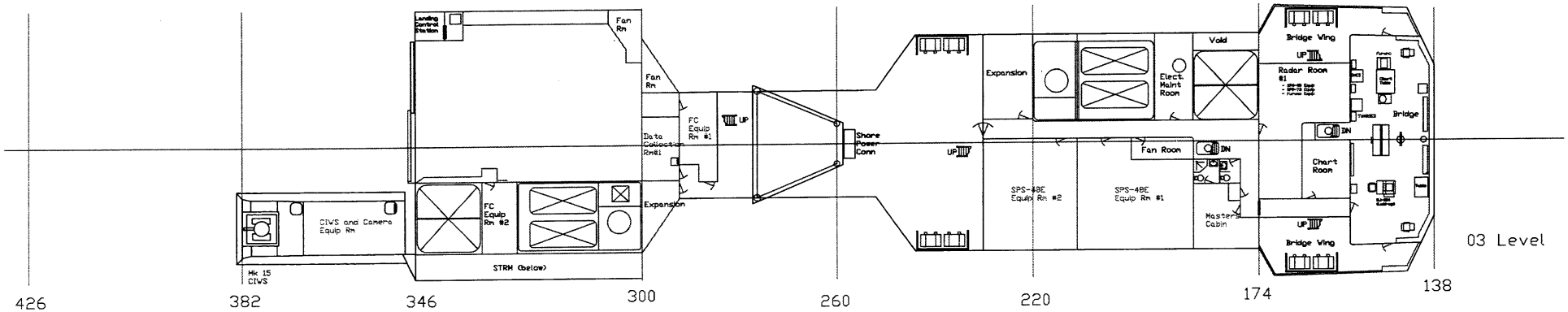
Landing Control Station
Fan Rm
Fan Rm
FC Equip Rm #1
UP
Data Collection Rm#1
Shore Power Conn
UP
Expansion
FC Equip Rm #2
Expansion
CIWS and Camera Equip Rm
Mk 15 CIWS
STRM (below)
Expansion
SPS-48E Equip Rm #2
SPS-48E Equip Rm #1
Elect. Maint Room
Void
Fan Room
DN
Master's Cabin
Bridge Wing
UP
Radar Room #1
Bridge
DN
Chart Room
UP
Bridge Wing
426
382
346
300
260
220
174
138
03 Level

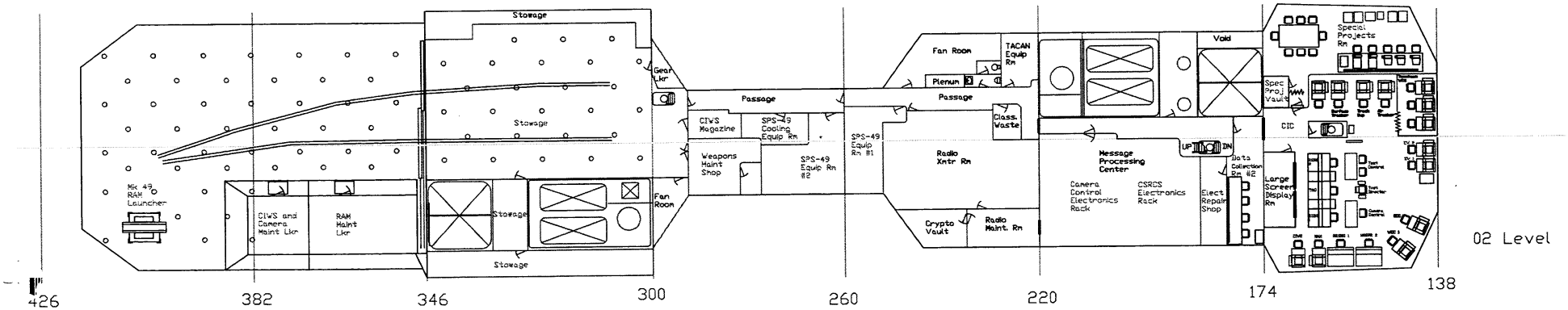
Stowage
Stowage
Gear Lkr
Mk 49 RAM Launcher
CIWS and Camera Maint Lkr
RAM Maint Lkr
Stowage
Stowage
Fan Room
Passage
CIWS Magazine
SPS-49 Cooling Equip Rm
Weapons Maint Shop
SPS-49 Equip Rm #2
SPS-49 Equip Rm #1
Fan Room
Plenum
TACAN Equip Rm
Passage
Class. Waste
Radio Xmtr Rm
Crypto Vault
Radio Maint. Rm
Message Processing Center
Camera Control Electronics Rack
CSRCS Electronics Rack
Elect Repair Shop
UP
DN
Data Collection Rm #2
Void
Special Projects Rm
Spec Proj Vault
CIC
Large Screen Display Rm
426
382
346
300
260
220
174
138
02 Level

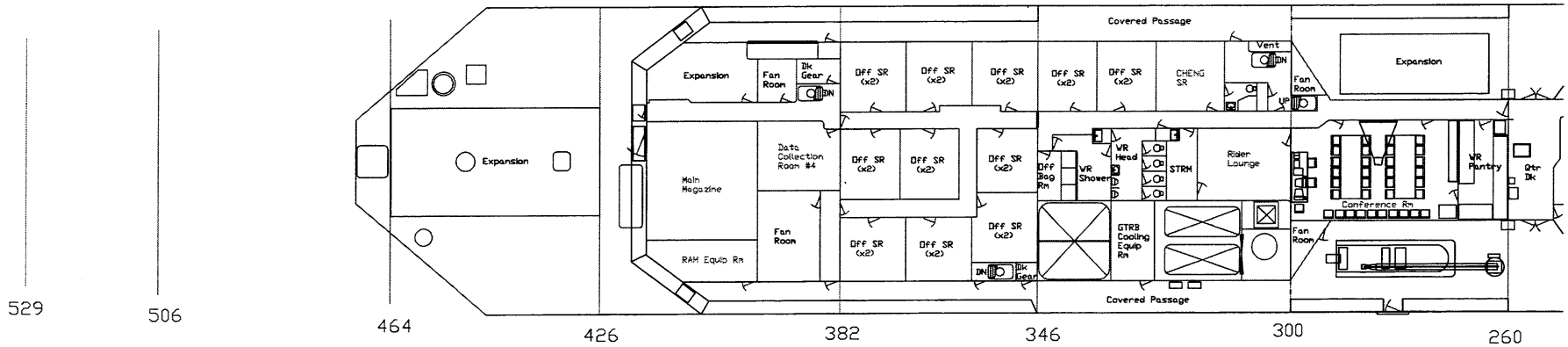
Covered Passage
Expansion
Fan Room
Dk Gear
Off SR (x2)
CHENG SR
Vent
DN
UP
Main Magazine
Data Collection Room #4
RAM Equip Rm
WR Head
WR Shower
Off Bag Rm
STRM
Rider Lounge
Conference Rm
WR Pantry
Qtr Dk
GTRB Cooling Equip Rm
529
506
464
426
382
346
300
260
AP

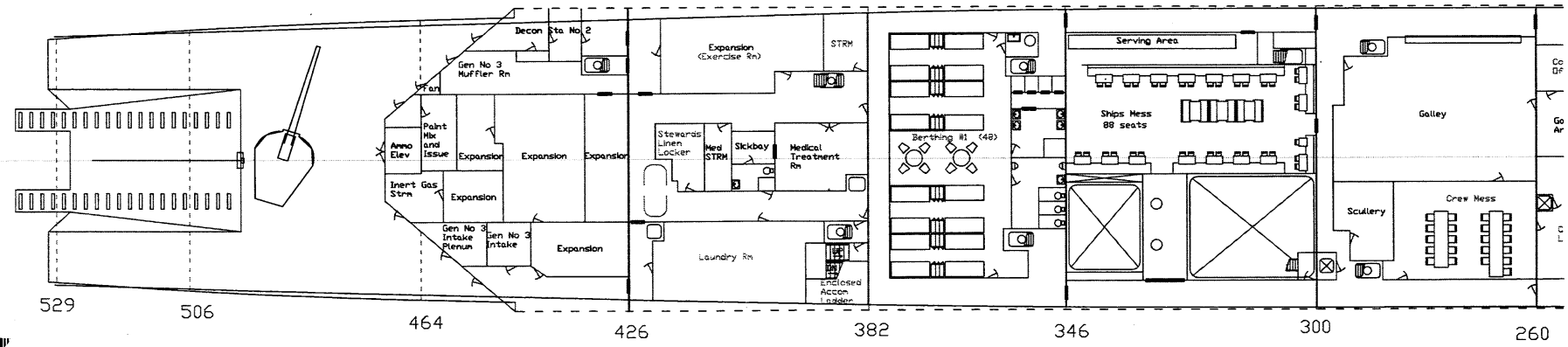
Decon Sta No 2
Gen No 3 Muffler Rm
Fan
Ammo Elev
Paint Mix and Issue
Expansion
Inert Gas Strm
Gen No 3 Intake Plenum
Gen No 3 Intake
Expansion (Exercise Rm)
STRM
Stewards Linen Locker
Med STRM
Sickbay
Medical Treatment Rm
Laundry Rm
Enclosed Accom Ladder
Berthing #1 (48)
Serving Area
Ships Mess 88 seats
Galley
Scullery
Crew Mess
529
506
464
426
382
346
300
260
AP

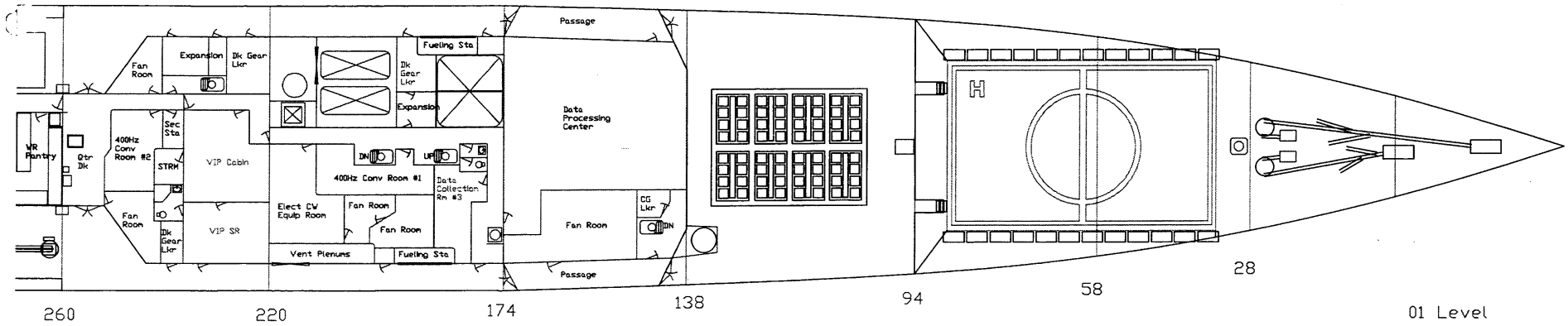
Passage
Fan Room
Expansion
Dk Gear Lkr
Fueling Sta
Dk Gear Lkr
Expansion
Data Processing Center
VR Pantry
Qtr Dk
400Hz Conv Room #2
Sec Sta
STRM
VIP Cabin
DN
UP
400Hz Conv Room #1
Data Collection Rm #3
Fan Room
Elect CW Equip Room
Fan Room
Fan Room
Dk Gear Lkr
VIP SR
Vent Plenums
Fueling Sta
CG Lkr
DN
Fan Room
Passage
260
220
174
138
94
58
28
01 Level
FP

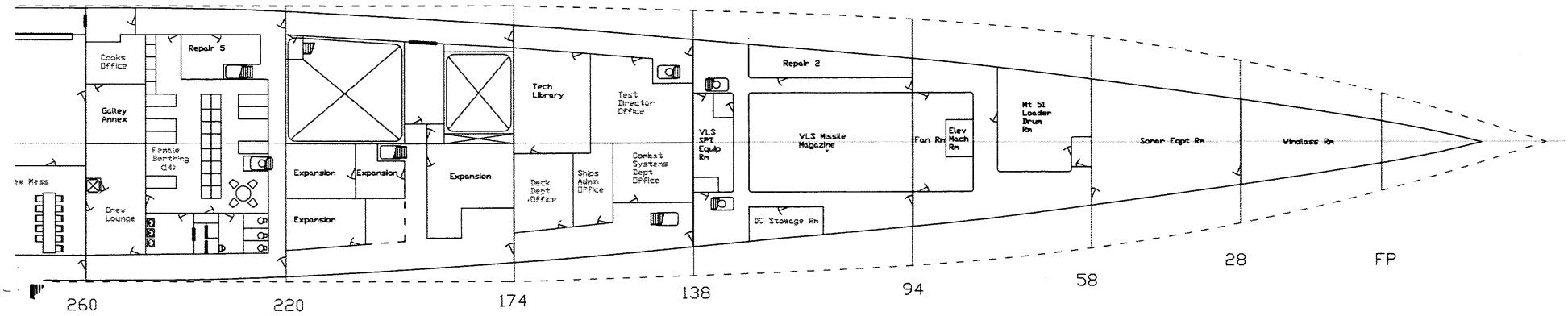
Cooks Office
Repair 5
Galley Annex
Female Berthing (14)
Crew Mess
Crew Lounge
Expansion
Expansion
Expansion
Expansion
Tech Library
Test Director Office
Deck Dept Office
Ships Admin Office
Combat Systems Dept Office
VLS SPT Equip Rm
Repair 2
VLS Missle Magazine
DC Stowage Rm
Fan Rm
Elev Mach Rm
Mt 51 Loader Drum Rm
Sonar Eqpt Rm
Windlass Rm
260
220
174
138
94
58
28
FP
Main Deck
(1st Deck)

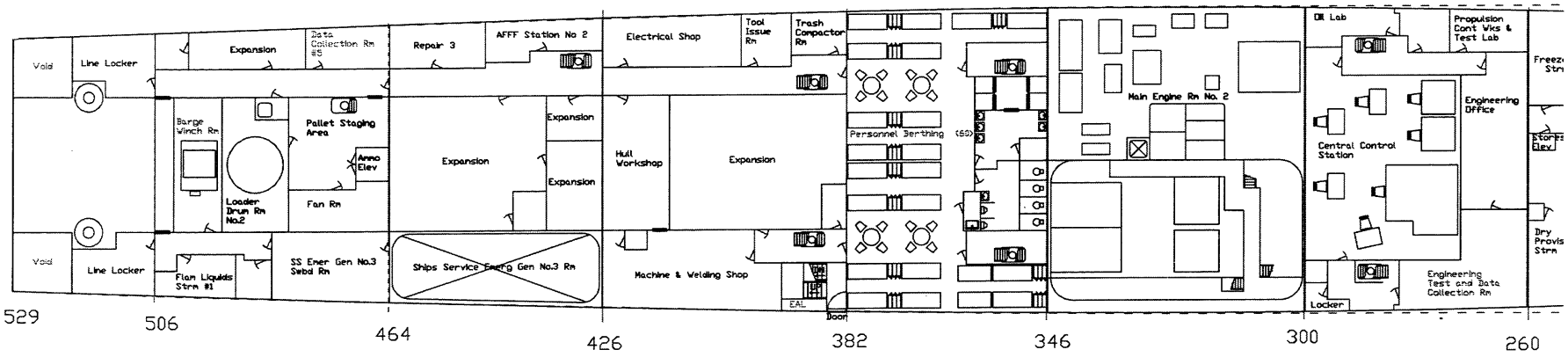
Void
Line Locker
Expansion
Data Collection Rm #5
Repair 3
AFFF Station No 2
Electrical Shop
Tool Issue Rm
Trash Compactor Rm
Oil Lab
Propulsion Cont Wks & Test Lab
Barge Winch Rm
Pallet Staging Area
Ammo Elev
Loader Drum Rm No.2
Fan Rm
Expansion
Hull Workshop
Personnel Berthing (60)
Main Engine Rm No. 2
Central Control Station
Engineering Office
Stores Elev
Dry Provis Strm
Void
Line Locker
Flam Liquids Strm #1
SS Emer Gen No.3 Swbd Rm
Ships Service Emerg Gen No.3 Rm
Machine & Welding Shop
EAL
Door
Locker
Engineering Test and Data Collection Rm
529
506
464
426
382
346
300
260
AP

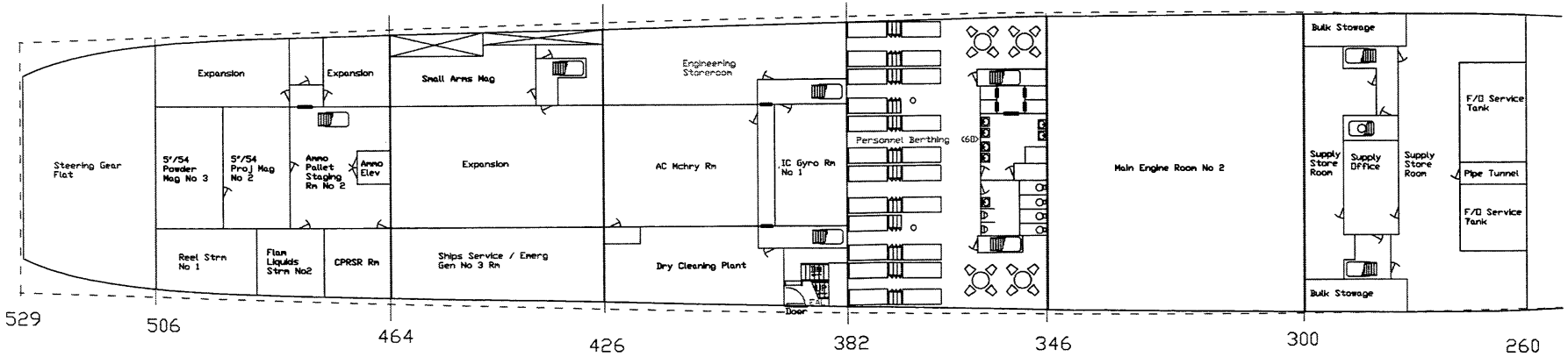
Expansion
Expansion
Small Arms Mag
Engineering Storeroom
Bulk Stowage
Steering Gear Flat
5"/54 Powder Mag No 3
5"/54 Proj Mag No 2
Ammo Pallet Staging Rm No 2
Ammo Elev
Expansion
AC Mchry Rm
IC Gyro Rm No 1
Personnel Berthing (60)
Main Engine Room No 2
Supply Store Room
Supply Office
Supply Store Room
F/O Service Tank
Pipe Tunnel
F/O Service Tank
Reel Strm No 1
Flam Liquids Strm No2
CPRSR Rm
Ships Service / Emerg Gen No 3 Rm
Dry Cleaning Plant
EAL
Door
Bulk Stowage
529
506
464
426
382
346
300
260
AP

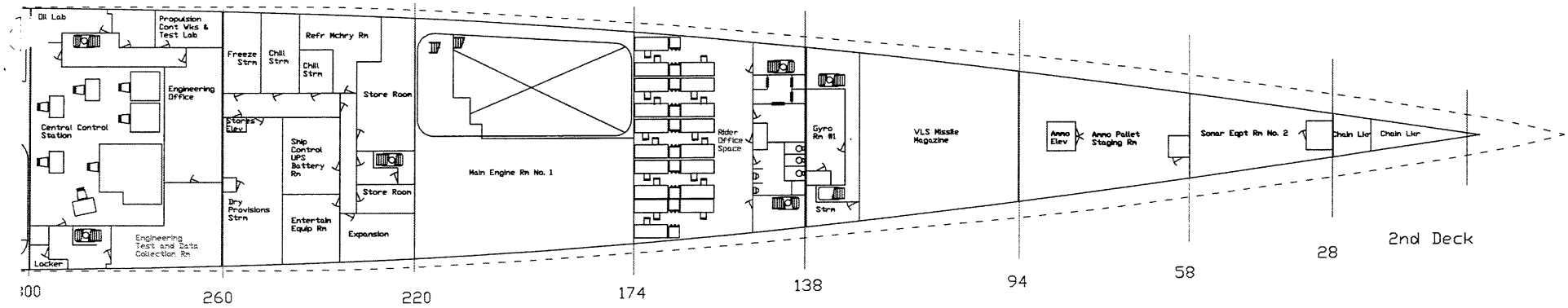
Oil Lab
Propulsion Cont Wks & Test Lab
Engineering Office
Central Control Station
Locker
Engineering Test and Data Collection Rm
Freeze Strm
Chill Strm
Chill Strm
Refr Mchry Rm
Stores Elev
Ship Control UPS Battery Rm
Dry Provisions Strm
Entertain Equip Rm
Store Room
Store Room
Expansion
Main Engine Rm No. 1
Rider Office Space
Gyro Rm #1
Strm
VLS Missile Magazine
Ammo Elev
Ammo Pallet Staging Rm
Sonar Eqpt Rm No. 2
Chain Lkr
Chain Lkr
260
220
174
138
94
58
28
2nd Deck
FP

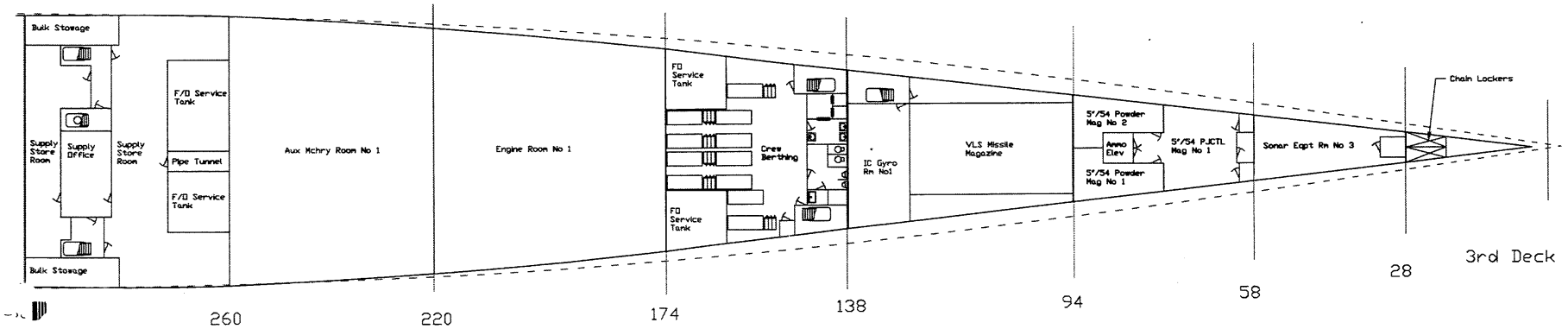
Bulk Stowage
Supply Store Room
Supply Office
Supply Store Room
F/O Service Tank
Pipe Tunnel
F/O Service Tank
Bulk Stowage
Aux Mchry Room No 1
Engine Room No 1
FO Service Tank
Crew Berthing
FO Service Tank
IC Gyro Rm No1
VLS Missile Magazine
5"/54 Powder Mag No 2
Ammo Elev
5"/54 Powder Mag No 1
5"/54 PJCTL Mag No 1
Sonar Eqpt Rm No 3
Chain Lockers
260
220
174
138
94
58
28
3rd Deck
FP

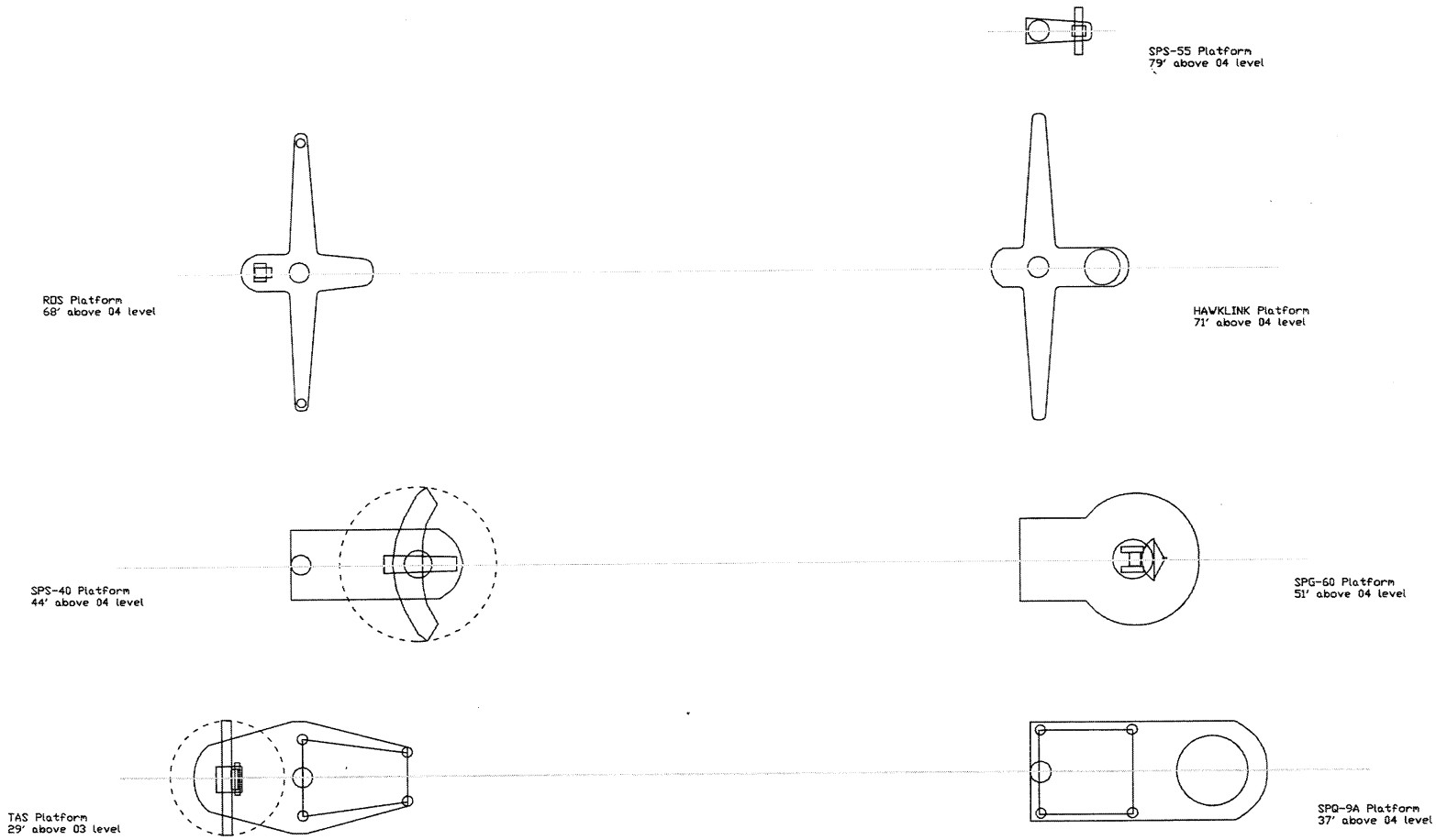
SPS-55 Platform
79' above 04 level
RDS Platform
68' above 04 level
HAWKLINK Platform
71' above 04 level
SPS-40 Platform
44' above 04 level
SPG-60 Platform
51' above 04 level
TAS Platform
29' above 03 level
SPQ-9A Platform
37' above 04 level

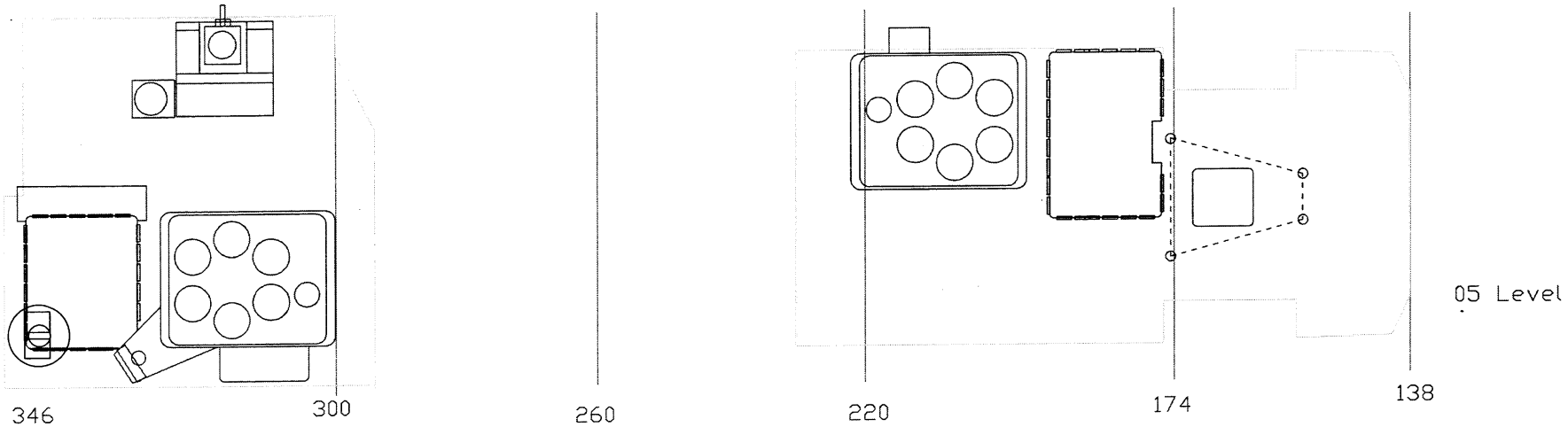
346
300
260
220
174
138
05 Level

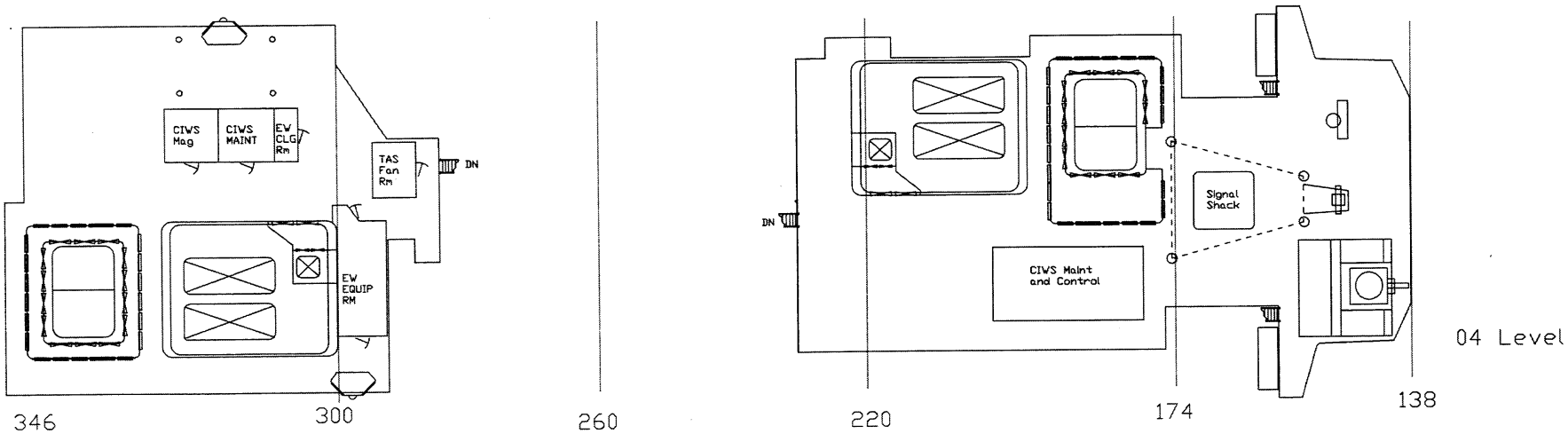
CIWS Mag
CIWS MAINT
EW CLG Rm
TAS Fan Rm
DN
EW EQUIP RM
346
300
260
DN
Signal Shack
CIWS Maint and Control
220
174
138
04 Level

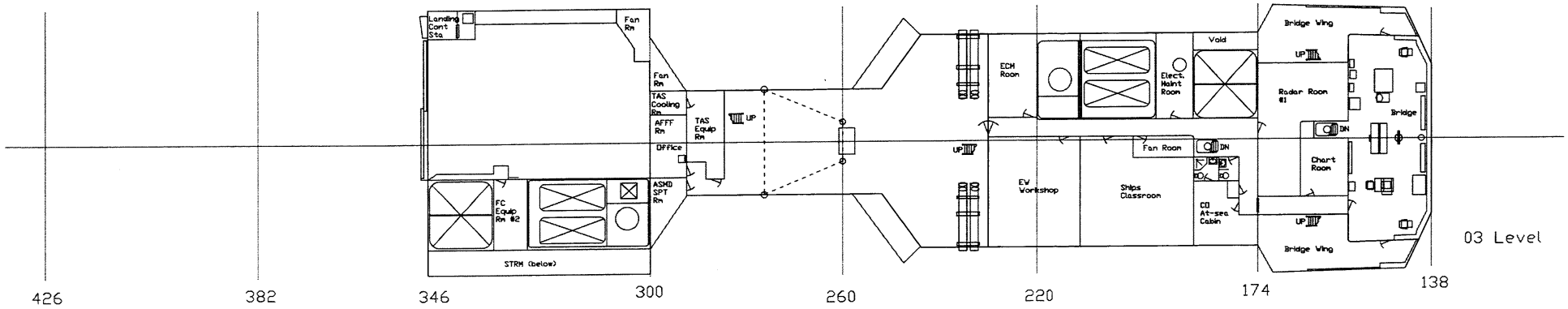
Landing Cont Sta
Fan Rm
Fan Rm
TAS Cooling Rm
AFFF Rm
Office
TAS Equip Rm
UP
ASMD SPT Rm
FC Equip Rm #2
STRM (below)
ECM Room
Elect. Maint Room
Void
Bridge Wing
UP
Radar Room #1
Bridge
DN
Chart Room
Fan Room
DN
RO
RO
EW Workshop
Ships Classroom
CO At-sea Cabin
UP
Bridge Wing
03 Level
426
382
346
300
260
220
174
138

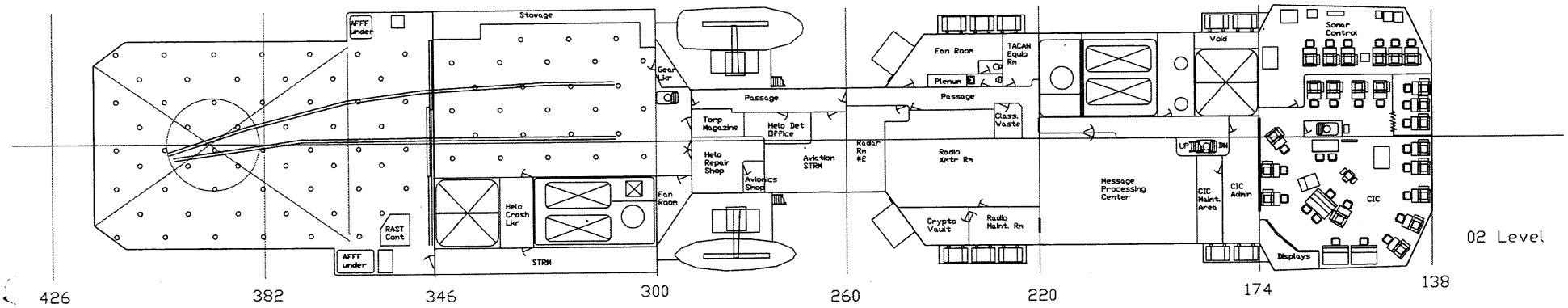
AFFF Under
Stowage
Gear Lkr
Passage
Torp Magazine
Helo Det Office
Helo Repair Shop
Avionics Shop
Aviation STRM
Radar Rm #2
Fan Room
Helo Crash Lkr
STRM
RAST Cont
AFFF under
Fan Room
Plenum
TACAN Equip Rm
Passage
Class. Waste
Radio Xmtr Rm
Crypto Vault
Radio Maint. Rm
Message Processing Center
Void
UP
DN
CIC Maint. Area
CIC Admin
Sonar Control
CIC
Displays
02 Level
426
382
346
300
260
220
174
138

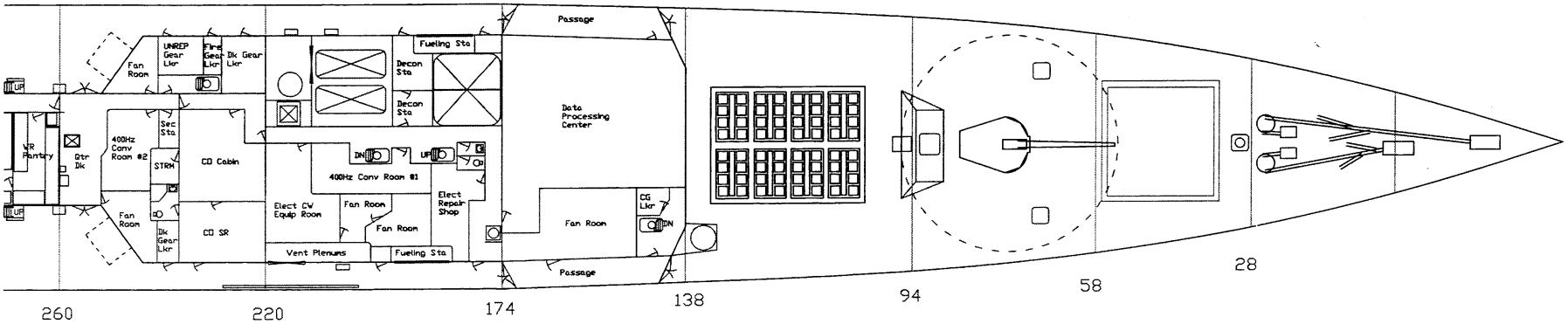
Passage
Fan Room
UNREP Gear Lkr
Fire Gear Lkr
Dk Gear Lkr
Fueling Sta
Decon Sta
Decon Sta
Data Processing Center
UP
WR Pantry
Qtr Dk
400Hz Conv Room #2
Sec Sta
STRM
CO Cabin
DN
UP
400Hz Conv Room #1
Elect Repair Shop
CG Lkr
DN
Fan Room
Elect CW Equip Room
Fan Room
Fan Room
Fan Room
Dk Gear Lkr
CO SR
Vent Plenums
Fueling Sta
Passage
260
220
174
138
94
58
28
FP
01 Level

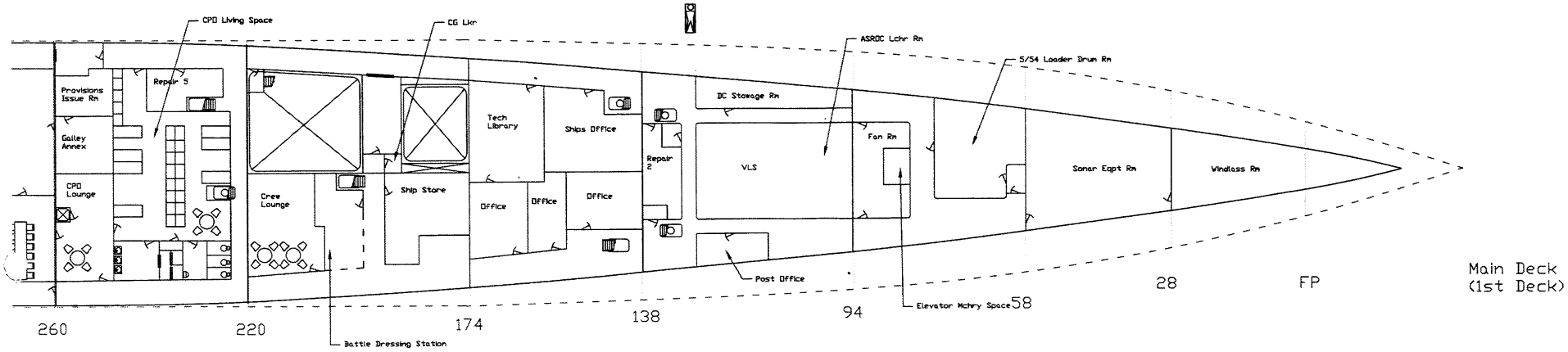
CPO Living Space
CG Lkr
ASROC Lchr Rm
5/54 Loader Drum Rm
Provisions Issue Rm
Repair 5
Galley Annex
CPO Lounge
Crew Lounge
Ship Store
Tech Library
Ships Office
Office
Office
Office
Repair 2
DC Stowage Rm
VLS
Fan Rm
Sonar Eqpt Rm
Windlass Rm
Post Office
Elevator Mchry Space
Battle Dressing Station
260
220
174
138
94
58
28
FP
Main Deck
(1st Deck)

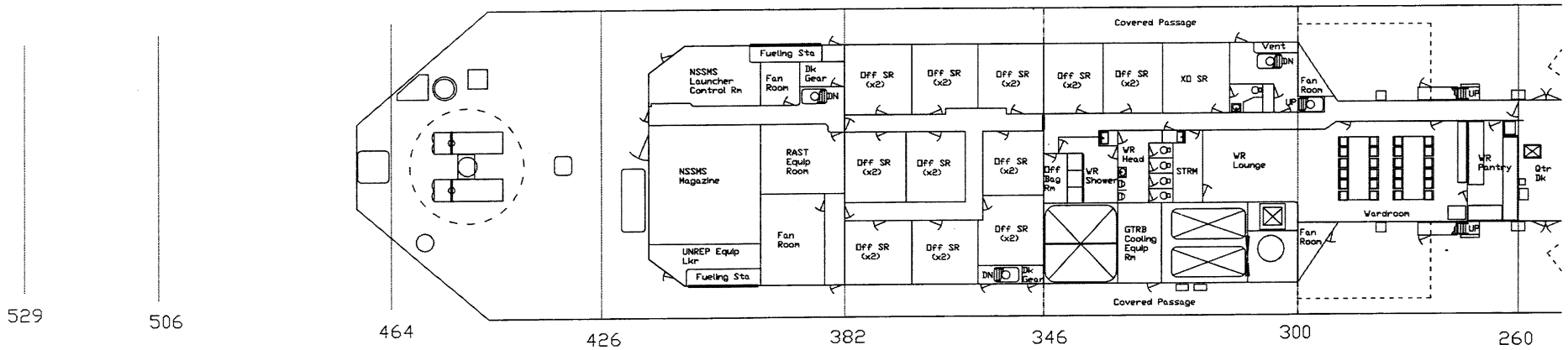
Covered Passage
Fueling Sta
NSSMS Launcher Control Rm
Fan Room
Dk Gear
DN
Off SR (x2)
XO SR
Vent
UP
NSSMS Magazine
RAST Equip Room
Off Bag Rm
VR Shower
VR Head
STRM
WR Lounge
WR Pantry
Qtr Dk
Wardroom
UNREP Equip Lkr
GTRB Cooling Equip Rm
529
506
464
426
382
346
300
260

AP

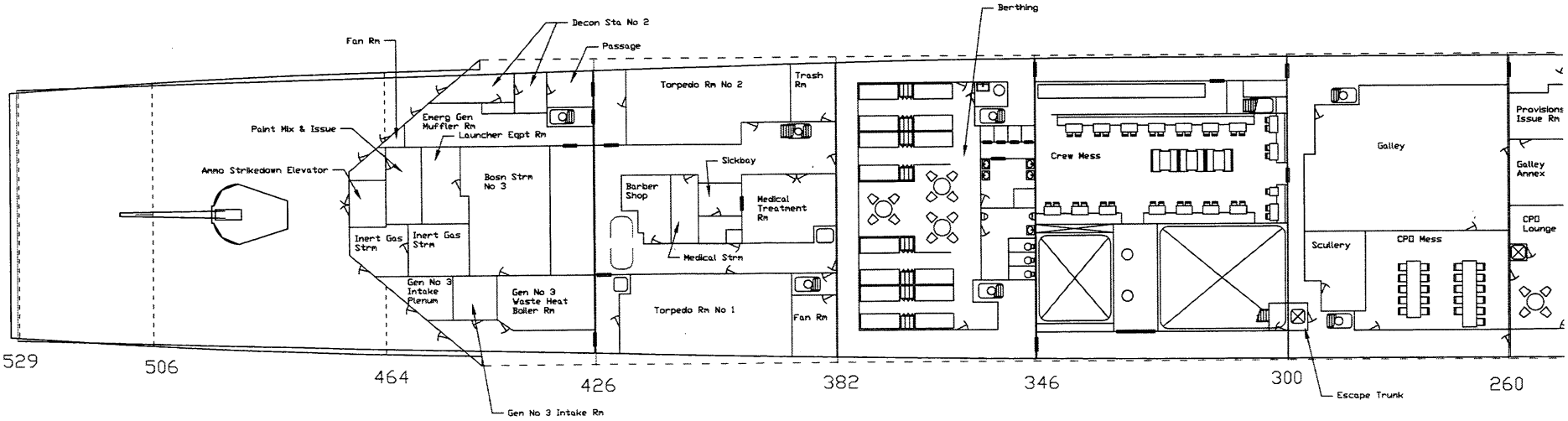
Decon Sta No 2
Fan Rm
Passage
Berthing
Torpedo Rm No 2
Trash Rm
Emerg Gen Muffler Rm
Launcher Eqpt Rm
Paint Mix & Issue
Ammo Strikedown Elevator
Bosn Strm No 3
Sickbay
Barber Shop
Medical Treatment Rm
Medical Strm
Inert Gas Strm
Gen No 3 Intake Plenum
Gen No 3 Waste Heat Boiler Rm
Torpedo Rm No 1
Crew Mess
Galley
Provisions Issue Rm
Galley Annex
CPO Lounge
Scullery
CPO Mess
Escape Trunk
Gen No 3 Intake Rm
529
506
464
426
382
346
300
260

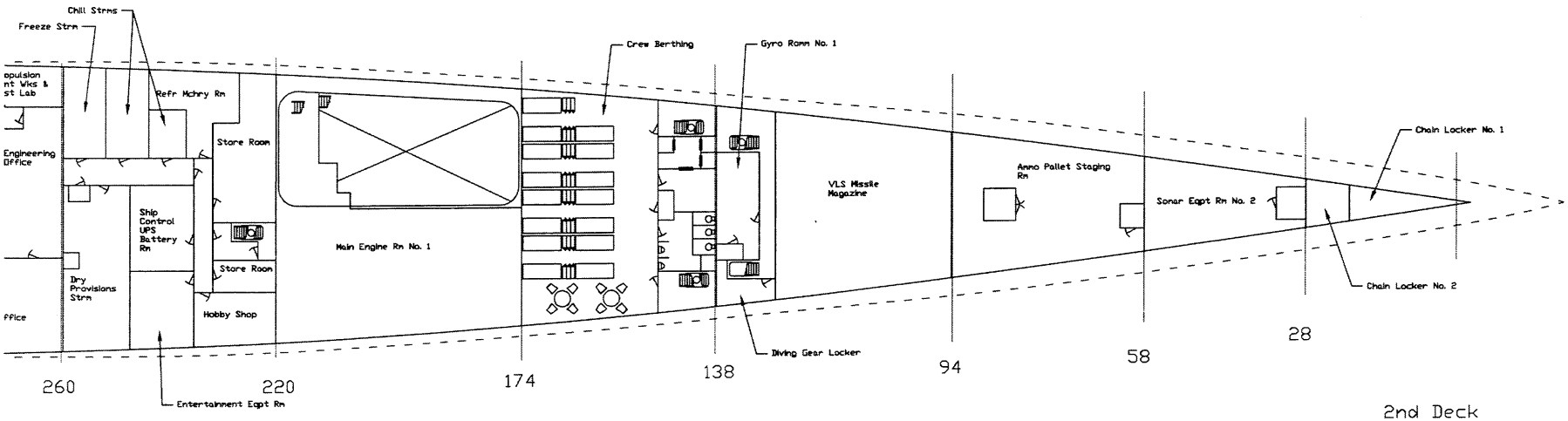

2nd Deck

FP

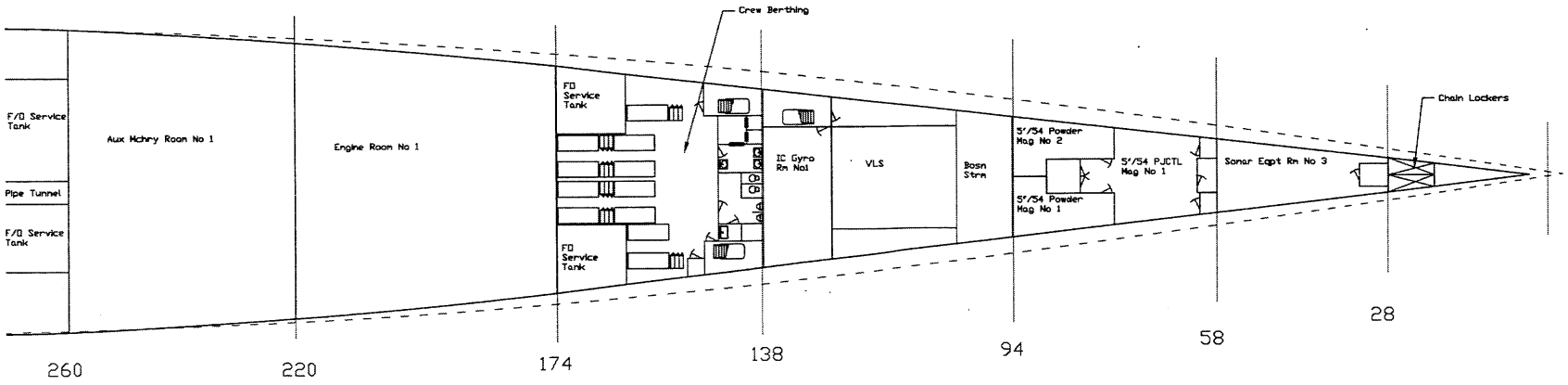

3rd Deck

FP

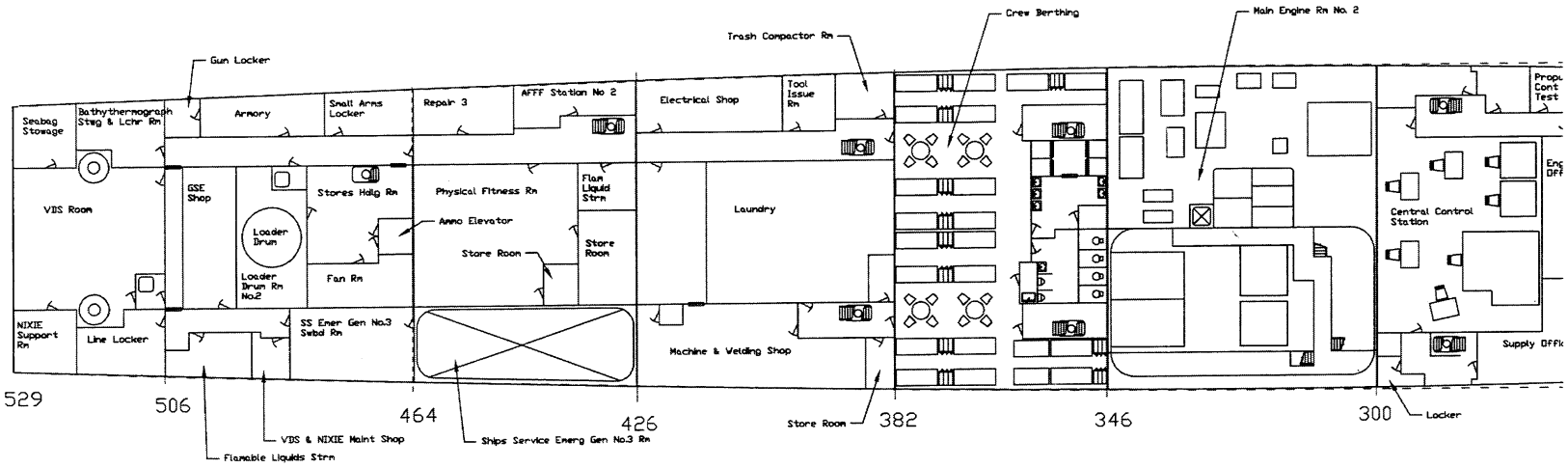
Gun Locker
Trash Compactor Rm
Crew Berthing
Main Engine Rm No. 2
Seabag Stowage
Bathythermograph Stwg & Lchr Rm
Armory
Small Arms Locker
Repair 3
AFFF Station No 2
Electrical Shop
Tool Issue Rm
VDS Room
GSE Shop
Loader Drum
Loader Drum Rm No.2
Stores Hdlg Rm
Physical Fitness Rm
Flam Liquid Strm
Ammo Elevator
Store Room
Store Room
Fan Rm
Laundry
Central Control Station
NIXIE Support Rm
Line Locker
SS Emer Gen No.3 Swbd Rm
Machine & Welding Shop
Supply Offic
529
506
464
426
382
346
300
Locker
Store Room
VDS & NIXIE Maint Shop
Ships Service Emerg Gen No.3 Rm
Flamable Liquids Strm

AP

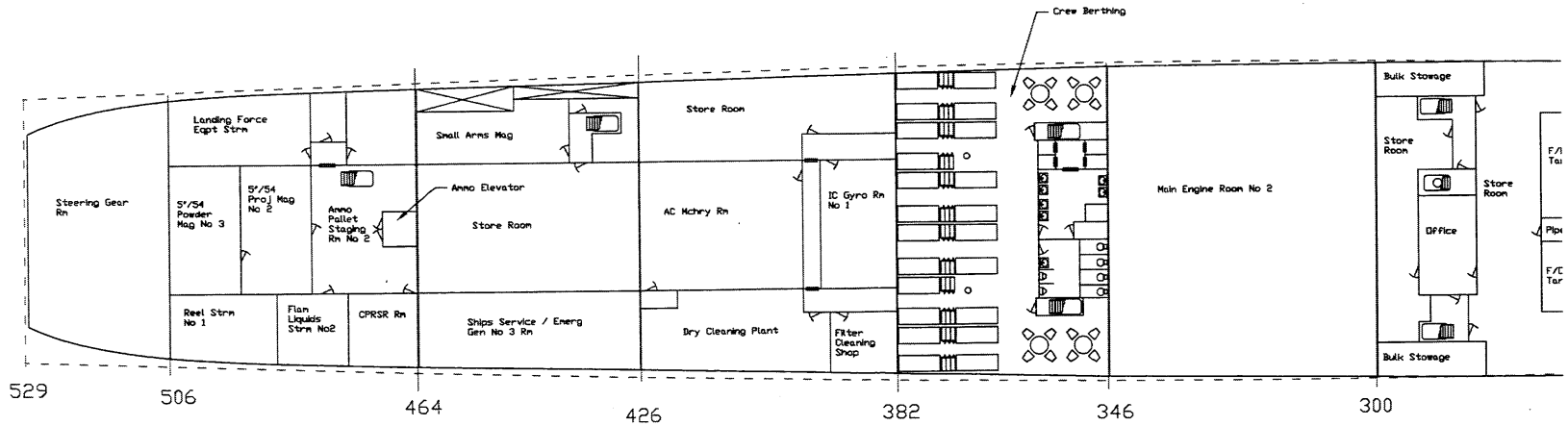
Crew Berthing
Landing Force Eqpt Strm
Small Arms Mag
Store Room
Bulk Stowage
Steering Gear Rm
5"/54 Powder Mag No 3
5"/54 Proj Mag No 2
Ammo Pallet Staging Rm No 2
Ammo Elevator
Store Room
AC Mchry Rm
IC Gyro Rm No 1
Main Engine Room No 2
Store Room
Store Room
Office
Reel Strm No 1
Flam Liquids Strm No2
CPRSR Rm
Ships Service / Emerg Gen No 3 Rm
Dry Cleaning Plant
Filter Cleaning Shop
Bulk Stowage
529
506
464
426
382
346
300

AP

Appendix G

ASSET Reports

The Advanced Surface Ship Evaluation Tool (ASSET) is a family of interactive computer programs for use in the exploratory and feasibility phases of Navy ship design. The program includes modules that address a specific domain of naval architecture, such as hull geometry, hull structure, resistance, propulsion, weight, hydrostatics, manning, etc. The modules provide both design synthesis and analysis capability. Although it is better suited for new ship designs, the program does have the capability to be used in a conversion. The design team chose this program to analyze the stability of the SWTS conversion.

The ASSET model utilized in the stability analysis was a modification of a DD-963 model made by LCDR Pat Hudson, USNR. This DD-963 model was a modification of a CG-47 model obtained by LCDR Hudson. The design team would like to thank LCDR Hudson for his assistance in this effort.

Although the ASSET model was used only to analyze the stability of the SWTS, the design team tried to incorporate all aspects of the SWTS in the model. This included generating capacity, superstructure reshaping, and inclusion of the SWTS combat systems suite in the Payload and Adjustments table. Several problems were encountered while manipulating the model. These problems could be the result of user error. The problems encountered are listed for informational purposes:

1. The machinery spaces (MER1, MER2 and #3 GTG Room) did not contain enough volume for the enclosed machinery, although this is how it is laid out in the actual ship. This error occurred in CG-47, DD-963 and SWTS models.
2. The program experienced a fatal error when the manning array was placed at the SWTS levels (150-person crew). The program would shut down when these low numbers were entered. The SWTS model maintains the standard DD-963 crew.
3. The program does not allow for the inactivation of one of the shafts. Therefore, the ASSET reports reflect a twin-shaft ship.

ASSET Reports:

1. Design summary
2. Payloads and Adjustment Table
3. Hydrostatic Analysis
4. Hydrostatic Variables of Form
5. Hull Coefficients
6. Intact Stability with a Heeling Wind
7. Resistance vs. Speed
8. EHP vs. Speed
9. Weight Summary
10. Payloads and Adjustment Weights

ASSET/MONOSC V4.4.1 - DESIGN SUMMARY - 12/15/1999 14:26. 2
DATABANK-C:\ASSET441\MONOSC\MSC441.BNK SHIP-SWTS

PRINTED REPORT NO. 1 - SUMMARY

SHIP COMMENT TABLE
USS O'BRIEN -- DD 975
CREATED BY P. HUDSON
MONOSC VERSION 4.40
AUGUST 1999
MODIFIED BY P. MALONE ON 9/99

PRINCIPAL CHARACTERISTICS - FT	
LBP	529.0
HULL LOA	561.0
BEAM, DWL	55.3
BEAM, WEATHER DECK	55.3
DEPTH @ STA 10	42.0
DRAFT TO KEEL DWL	18.0
DRAFT TO KEEL LWL	19.9
FREEBOARD @ STA 3	29.4
GMT	4.6
CP	0.547
CX	0.816

SPEED(KT): MAX= 34.3 SUST= 32.5
ENDURANCE: 6000.0 NM AT 20.0 KTS

TRANSMISSION TYPE: MECH
MAIN ENG: 4 GT @ 26250.0 HP

SHAFT POWER/SHAFT: 51197.3 HP
PROPELLERS: 2 - CP - 17.0 FT DIA

SEP GEN: 3 GT @ 2000.0 KW

24-HR LOAD	1827.9
MAX MARG ELECT LOAD	3402.0

WEIGHT SUMMARY - LTON	
GROUP 1 - HULL STRUCTURE	2950.4
GROUP 2 - PROP PLANT	779.9
GROUP 3 - ELECT PLANT	280.0
GROUP 4 - COMM + SURVEIL	305.2
GROUP 5 - AUX SYSTEMS	866.4
GROUP 6 - OUTFIT + FURN	648.8
GROUP 7 - ARMAMENT	239.1
SUM GROUPS 1-7	6069.7
DESIGN MARGIN	0.0
LIGHTSHIP WEIGHT	6069.7
LOADS	2090.7
FULL LOAD DISPLACEMENT	8160.5
FULL LOAD KG: FT	21.7
MILITARY PAYLOAD WT- LTON	688.7
USABLE FUEL WT - LTON	1777.3

	OFF	CPO	ENL	TOTAL
MANNING	35	27	315	377
ACCOM	35	27	315	377

AREA SUMMARY - FT2		
HULL AREA	-	28567.
SUPERSTRUCTURE AREA	-	29779.
TOTAL AREA	-	58347.

VOLUME SUMMARY - FT3		
HULL VOLUME	-	731738.
SUPERSTRUCTURE VOLUME	-	300081.
TOTAL VOLUME	-	1031819.

ASSET/MONOSC V4.4.1 - DESIGN SUMMARY - 12/15/1999 14:27.52
DATABANK-C:\ASSET441\MONOSC\MSC441.BNK SHIP-SWTS

PRINTED REPORT NO. 5 - PAYLOAD AND ADJUSTMENTS

ROW	PAYLOAD AND ADJUSTMENT NAME
1	SPS-49 2-D AIR SEARCH RADAR
2	SPS-48 3-D AIR SEARCH RADAR
3	SPS-73 SURFACE SEARCH RADAR
4	(2) MK 95 NSSMS DIRECTORS
5	MK XII AIMS IFF
6	SSDS MK II
7	SLQ-32(V)3 ACTIVE/PASSIVE ECM
8	SLQ-32(V)3 -- MK36 DLS W/ 4 LAUNCHERS
9	MK36 DLS SRBOC CANNISTERS -- 100 RDS
10	MK86 5IN GFCS INCL SPQ-9
11	SSDS MK II
12	1X 8X MK41 VLS 61 CELL [EMPTY]
13	VLS WEAPON CONTROL SYSTEM
14	VLS WEAPONS HANDLING
15	61 CELL VLS ARMOR - LEVEL II HY-80
16	61 CELL MAGAZINE DEWATERING SYSTEM
17	1X MK15 20MM CIWS [VULCAN-PHALANX] & ENC
18	MK15 20MM CIWS AMMO -- 16000 RDS
19	1X MK45 5IN/54 GUN [PALLET STRIKEDOWN]
20	1X MK45 5IN AMMO -- 600 RDS
21	RAM LAUNCHER
22	LAMPS MKIII : AVIATION FUEL SYSTEM
23	SPECIAL PURPOSE SYSTEMS
24	FWD MAST RAM PANELS
25	AFT MAST RAM PANELS
26	SUPERSTRUCTURE RAM PANELS
27	LEAD BALLAST
28	KW ADJUST
29	CS KW ADJ
30	CCC KW ADJ
31	FLT DECK

ROW	WT KEY	WT ADD LTON	WT FAC	VCG KEY	VCG ADD FT	VCG FAC
1	W452	10.06	.000	BL	69.63	.000
2	W453	22.00	.000	BL	65.00	.000
3	W451	1.57	.000	BL	75.63	.000
4	W482	4.40	.000	BL	74.00	1.000
5	W455	2.22	.000	BL	65.63	.000
6	W410	6.00	.000	BL	45.00	.000
7	W471	2.32	.000	BL	74.72	.000
8	W471	1.38	.000	BL	62.71	.000
9	WF21	2.00	.000	BL	28.06	.000
10	W480	4.64	.000	BL	85.95	.000
11	W480	1.42	.000	BL	58.95	.000
12	W720	147.80	.000	BL	37.00	.000
13	W482	.70	.000	BL	39.00	.000
14	W722	1.00	.000	BL	39.00	1.000
15	W164	100.00	.000	BL	38.44	.000
16	W529	3.00	.000	D6.5	-10.80	1.000
17	W711	7.50	.000	BL	108.03	.000
18	WF21	8.43	.000	BL	118.06	.000
19	W710	57.00	.000	BL	29.03	.000
20	WF21	30.00	.000	BL	18.06	.000
21	W721	5.00	.000	BL	58.00	.000
22	W542	6.86	.000	BL	24.71	.000
23	W790	7.48	.000	BL	27.42	.000
24	W171	2.24	.000	BL	90.00	.000

25	W171	2.10	.000	BL	85.00	.000
26	NONE	20.00	.000	BL	35.00	.000
27	W191	350.00	.000	BL	30.00	.000
28	W700	.00	.000	BL	.00	.000
29	W400	.00	.000	BL	.00	.000
30	W300	.00	.000	BL	.00	.000
31	W100	6.00	.000	BL	32.00	.000

ROW	AREA KEY	---AREA ADD, FT2-- HULL/SS	SS/ONLY	-----AREA FAC----- HULL/SS	SS/ONLY
1	A1121	.00	415.00	.000	.000
2	A1121	.00	900.00	.000	.000
3	A1121	.00	111.00	.000	.000
4	A1121	.00	.00	.000	.000
5	A1121	.00	.00	.000	.000
6	A1120	.00	.00	.000	.000
7	A1141	40.00	132.00	.000	.000
8	NONE	.00	.00	.000	.000
9	NONE	.00	.00	.000	.000
10	A1210	.00	111.00	.000	.000
11	A1220	120.00	.00	.000	.000
12	A1220	1100.00	.00	.000	.000
13	A1220	56.00	.00	.000	.000
14	A1220	75.00	.00	.000	.000
15	NONE	.00	.00	.000	.000
16	NONE	.00	.00	.000	.000
17	A1210	.00	300.00	.000	.000
18	NONE	.00	.00	.000	.000
19	A1210	700.00	.00	.000	.000
20	NONE	.00	.00	.000	.000
21	NONE	.00	.00	.000	.000
22	A1380	54.00	.00	.000	.000
23	NONE	.00	.00	.000	.000
24	NONE	.00	.00	.000	.000
25	NONE	.00	.00	.000	.000
26	NONE	.00	.00	.000	.000
27	NONE	.00	.00	.000	.000
28	NONE	.00	.00	.000	.000
29	NONE	.00	.00	.000	.000
30	NONE	.00	.00	.000	.000
31	A1000	.00	.00	.000	.000

ROW	KW KEY	------KW ADD------ CRUISE	BATTLE	------KW FAC------ CRUISE	BATTLE
1	W452	75.00	75.00	1.000	1.000
2	W453	150.00	150.00	1.000	1.000
3	W451	4.00	4.00	1.000	1.000
4	W482	.00	.00	.000	.000
5	W455	4.00	4.00	1.000	1.000
6	W410	4.00	4.00	1.000	1.000
7	W471	62.00	62.00	1.000	1.000
8	W471	.00	.00	1.000	1.000
9	WF21	.00	.00	1.000	1.000
10	W480	17.00	17.00	1.000	1.000
11	W480	50.00	50.00	1.000	1.000
12	W720	40.00	40.00	1.000	1.000
13	W482	15.00	18.00	.000	.000
14	W722	.00	.00	.000	.000
15	W164	.00	.00	.000	.000
16	W529	.00	.00	.000	.000
17	W711	8.00	22.00	1.000	1.000
18	WF21	.00	.00	1.000	1.000
19	W710	21.00	47.00	1.000	1.000
20	WF21	.00	.00	1.000	1.000
21	W721	.00	.00	.000	.000
22	W542	.00	.50	1.000	1.000
23	W790	.00	.00	.000	.000
24	W171	.00	.00	.000	.000
25	W171	.00	.00	.000	.000

26	NONE	.00	.00	.000	.000
27	W191	.00	.00	.000	.000
28	W700	.00	.00	-.600	-.500
29	W400	.00	.00	-.500	-.500
30	W300	.00	.00	-.500	-.500
31	W100	.00	.00	.000	.000

ASSET/MONOSC V4.4.1 - HYDROSTATIC ANALYSIS - 12/15/1999 14:32.18
DATABANK-C:\ASSET441\MONOSC\MSC441.BNK SHIP-SWTS

PRINTED REPORT NO. 1 - SUMMARY

APPENDAGE IND-WITH
HYSTAT IND-FULL LOAD
COMP DEF IND-CALC

DISPLACEMENT, LTON	8160.5	MAX AREA STA LOC FM FP,FT	293.86
LCG LOC(+VE FWD MID), FT	-13.65	AREA AT MAX AREA STA, FT2	914.8
MIDSHIP DRAFT, FT	19.74	BEAM AT MAX AREA STA, FT	55.05
TRIM(+ BY STERN), FT	2.18	DRAFT AT MAX AREA STA, FT	19.87
KG, FT	21.65	BLOCK COEF	0.477
SHIP LBP, FT	529.00	PRISMATIC COEF	0.570
METACENTRIC HT(GM), FT	4.68	SECTIONAL AREA COEF	0.837
WATERPLANE AREA,FT2	21556.6	WATERLINE LENGTH, FT	529.58
WETTED SURF AREA, FT2	31250.7		

PRINTED REPORT NO. 2 - HYDROSTATIC VARIABLES OF FORM

DRAFT FT	TOTAL VOLUME FT3	APPDG VOLUME FT3	TOTAL DISPL LTON	LCB FT	KB FT	LCF FT
17.74	242687.	9237.	6938.5	-8.36	10.66	-43.54
18.03	248736.	9237.	7111.5	-9.21	10.84	-43.66
18.32	254808.	9237.	7285.0	-10.03	11.02	-43.75
18.60	260899.	9237.	7459.2	-10.82	11.20	-43.81
18.89	267009.	9237.	7633.9	-11.57	11.38	-43.84
19.17	273135.	9237.	7809.0	-12.29	11.55	-43.84
19.46	279275.	9237.	7984.6	-12.99	11.73	-43.81
19.74	285428.	9237.	8160.5	-13.65	11.90	-43.76
20.03	291593.	9237.	8336.7	-14.29	12.07	-43.69
20.32	297769.	9237.	8513.3	-14.90	12.24	-43.61
20.60	303958.	9237.	8690.3	-15.48	12.41	-43.52
20.89	310158.	9237.	8867.5	-16.04	12.59	-43.44
21.17	316370.	9237.	9045.1	-16.58	12.75	-43.36
21.46	322592.	9237.	9223.0	-17.09	12.92	-43.28
21.74	328825.	9237.	9401.2	-17.59	13.09	-43.20

	----------HULL ONLY----------					
DRAFT FT	WETTED SURFACE FT2	BLOCK COEFF -	PRISMATIC COEFF -	WPLANE COEFF -	WPLANE AREA FT2	TP1 LTON/IN
17.74	29070.0	0.448	0.550	0.724	21130.9	50.34
18.03	29389.3	0.452	0.553	0.727	21209.9	50.53
18.32	29705.7	0.456	0.556	0.729	21282.8	50.71
18.60	30019.3	0.460	0.559	0.731	21349.6	50.87
18.89	30330.1	0.464	0.562	0.733	21410.3	51.01
19.17	30638.4	0.469	0.565	0.735	21464.5	51.14
19.46	30945.3	0.473	0.567	0.737	21513.2	51.26
19.74	31250.7	0.477	0.570	0.739	21556.6	51.36
20.03	31556.1	0.481	0.573	0.741	21597.1	51.46
20.32	31862.5	0.484	0.575	0.742	21639.3	51.56
20.60	32169.2	0.487	0.578	0.743	21681.1	51.66
20.89	32475.8	0.491	0.580	0.744	21721.1	51.75
21.17	32782.0	0.494	0.582	0.745	21758.9	51.84
21.46	33088.2	0.497	0.585	0.746	21796.0	51.93
21.74	33394.5	0.500	0.587	0.747	21832.5	52.02

DRAFT FT	CID1TS NM/LTON	LONG BM FT	TRNSV BM FT	LONG KM FT	TRNSV KM FT	MT1 FT-LTON/IN
17.74	49.72	1373.63	16.25	1384.29	26.91	1501.4
18.03	50.05	1349.84	15.99	1360.68	26.83	1512.2
18.32	50.33	1326.42	15.73	1337.44	26.75	1522.2
18.60	50.56	1303.36	15.48	1314.56	26.67	1531.5
18.89	50.73	1280.66	15.22	1292.04	26.59	1540.1

19.17	50.86	1258.25	14.96	1269.80	26.51	1547.8
19.46	50.94	1236.24	14.70	1247.97	26.42	1555.0
19.74	50.99	1214.67	14.44	1226.57	26.34	1561.5
20.03	51.00	1193.48	14.19	1205.56	26.26	1567.4
20.32	51.00	1173.07	13.95	1185.32	26.20	1573.2
20.60	50.99	1153.39	13.72	1165.80	26.14	1579.0
20.89	50.99	1134.26	13.50	1146.84	26.09	1584.4
21.17	51.00	1115.58	13.29	1128.34	26.04	1589.6
21.46	50.99	1097.60	13.08	1110.53	26.00	1594.7
21.74	50.97	1080.28	12.88	1093.37	25.97	1599.9

PRINTED REPORT NO. 4 - INTACT STATIC STABILITY

COMP DEF IND-CALC

INTACT WIND SPEED, KT	100.00	LAT RESIST CENTER, FT	9.87
SAIL AREA, FT2	21029.3	TURN SPEED, KT	20.00
SAIL AREA FACTOR	1.25	TURN RADIUS, FT	600.00
SAIL AREA CTR ABV WL, FT	24.85	TURN HEEL ANGLE, DEG	9.17
WIND ARM RATIO	0.33	TURN ARM RATIO	0.18
WIND AREA RATIO	7.31	TURN AREA RATIO	0.85
WIND LEVER ARM, FT	1.52	TURN LEVER ARM, FT	0.76
WIND LIMITING KG, FT	24.58	TURN LIMITING KG, FT	23.54

TABLE OF INTACT RIGHTING ARMS(GZ), DRAFTS, AND TRIMS, FT

HEEL, DEG	0.00	5.00	10.00	20.00	30.00	40.00	50.00	60.00	70.00	80.00
GZ	0.00	0.41	0.82	1.64	2.49	3.35	4.08	4.21	4.00	3.66
TRIM	2.18	2.16	2.09	1.57	0.35	-1.33	-3.05	-5.04	-8.98	-21.05
DRAFT	19.74	19.73	19.70	19.48	18.94	17.80	15.77	12.79	7.56	-7.19

ASSET/MONOSC V4.4.1 - HYDROSTATIC ANALYSIS - 12/15/1999 14:32.18
DATABANK-C:\ASSET441\MONOSC\MSC441.BNK SHIP-SWTS
GRAPHIC DISPLAY NO. 1 - HULL COEFFICIENTS OF FORM

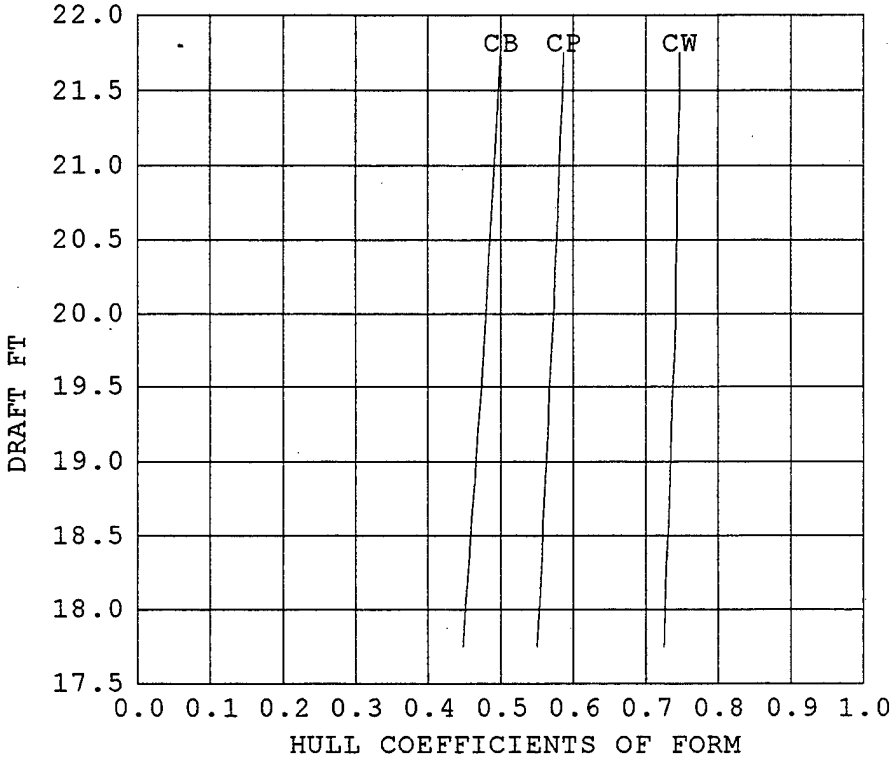

TRIM(+VE BY STERN), FT 2.18 APPENDAGE IND-WITH

ASSET/MONOSC V4.4.1 - HYDROSTATIC ANALYSIS - 12/15/1999 14:32.18
DATABANK-C:\ASSET441\MONOSC\MSC441.BNK SHIP-SWTS
GRAPHIC DISPLAY NO. 2 - HYDROSTATIC VARIABLES OF FORM

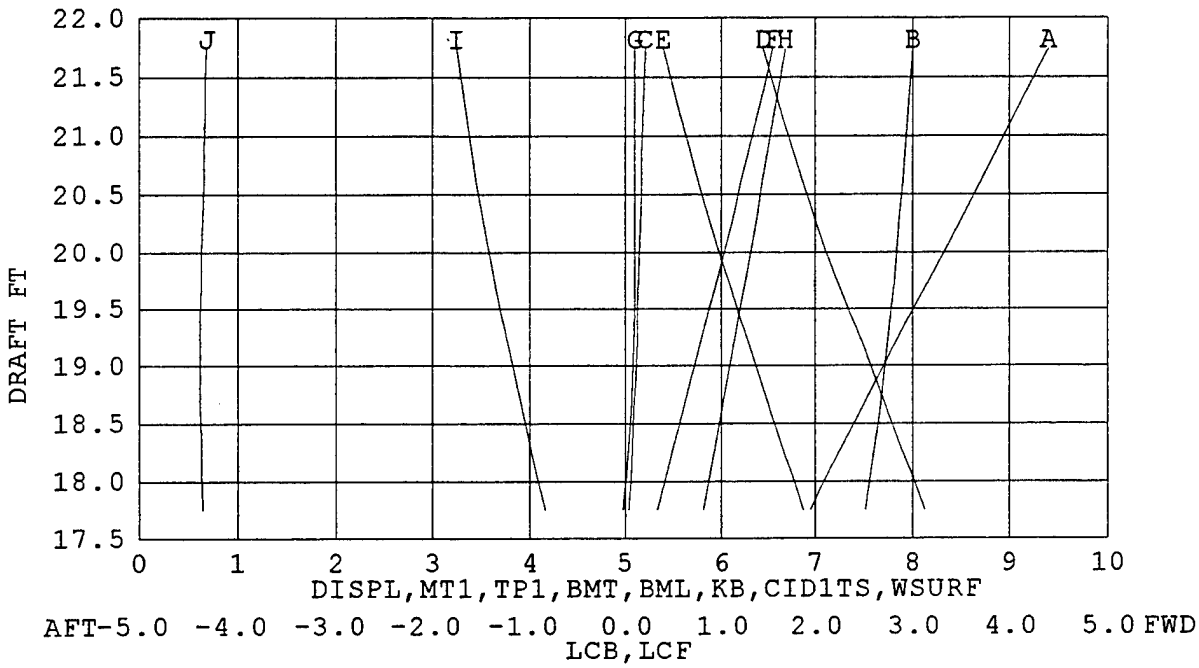

A DISPL	(1000 LTON)/UNIT	F KB	(2 FT)/UNIT
B MT1	(200 FT-LTON/IN)/UNIT	G CID1TS	(10 LTON/FT)/UNIT
C TP1	(10 LTON/IN)/UNIT	H WSURF	(5000 FT2)/UNIT
D BMT	(2 FT)/UNIT	I LCB	(10 FT)/UNIT
E BML	(200 FT)/UNIT	J LCF	(10 FT)/UNIT

TRIM(+VE BY STERN), FT 2.18 APPENDAGE IND-WITH

ASSET/MONOSC V4.4.1 - HYDROSTATIC ANALYSIS - 12/15/1999 14:32.18
DATABANK-C:\ASSET441\MONOSC\MSC441.BNK SHIP-SWTS
GRAPHIC DISPLAY NO. 4 - INTACT STATIC STABILITY WITH WIND HEELING ARM

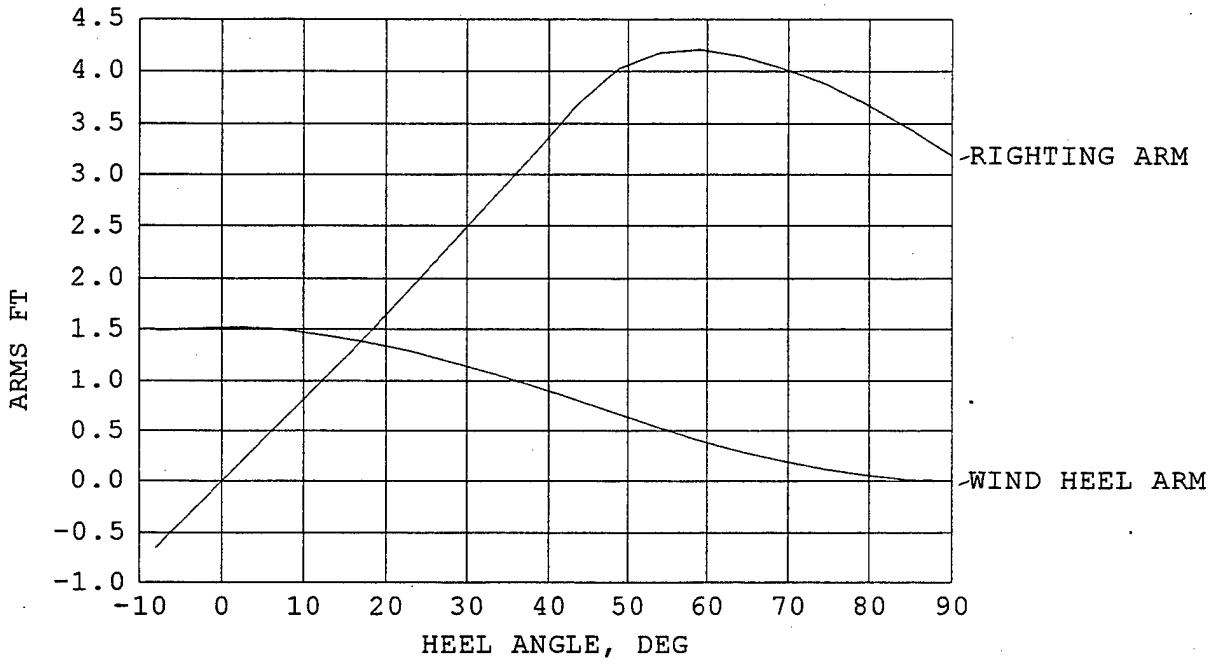

INTACT STATIC STABILITY

DISPLACEMENT, LTON	8160.48	LCG LOC(+VE FWD MID), FT	-13.65
KG, FT	21.65	WIND SPEED, KT	100.00
APPENDAGE IND-WITH			

ASSET/MONOSC V4.4.1 - RESISTANCE MODULE - 12/15/1999 14:34.23
DATABANK-C:\ASSET441\MONOSC\MSC441.BNK SHIP-SWTS
GRAPHIC DISPLAY NO. 1 - RESISTANCE VERSUS SPEED

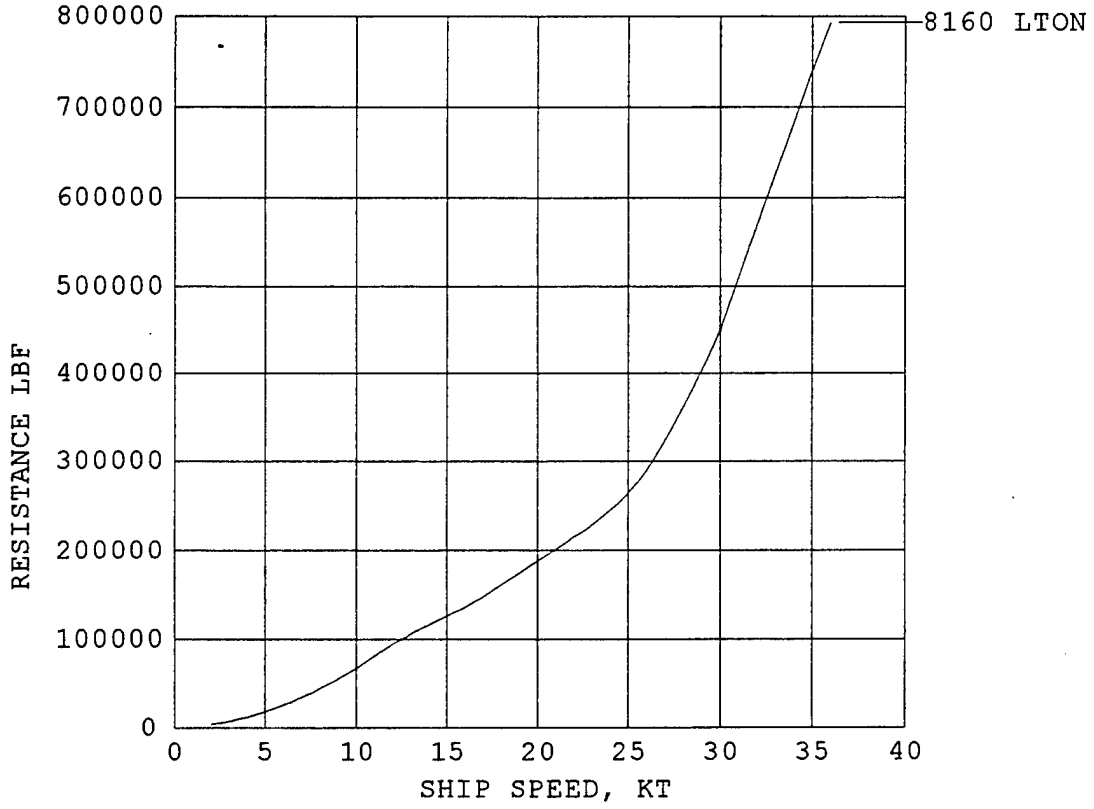

ASSET/MONOSC V4.4.1 - RESISTANCE MODULE - 12/15/1999 14:34.23
DATABANK-C:\ASSET441\MONOSC\MSC441.BNK SHIP-SWTS
GRAPHIC DISPLAY NO. 2 - EHP VERSUS SPEED

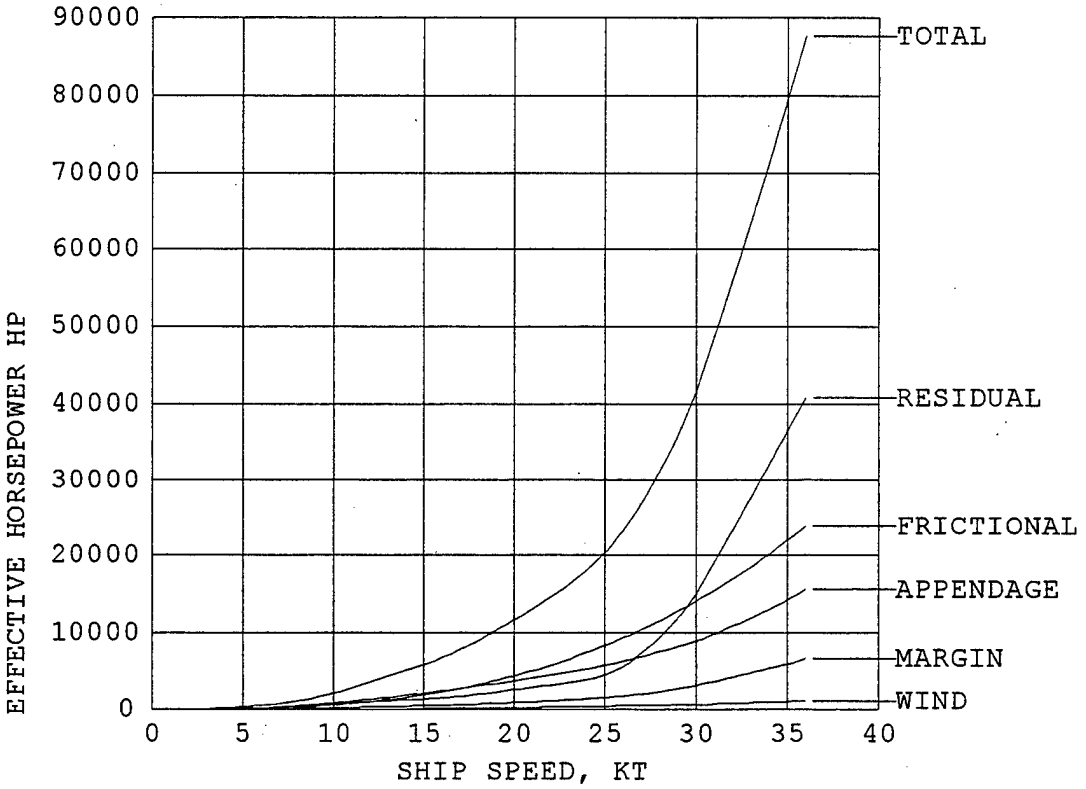

DISPLACEMENT = 8160 LTON

ASSET/MONOSC V4.4.1 - WEIGHT MODULE - 12/15/1999 14: 9.31
DATABANK-C:\ASSET441\MONOSC\MSC441.BNK SHIP-SWTS

PRINTED REPORT NO. 1 - SUMMARY

SWBS	G R O U P	W E I G H T LTON	PER CENT	LCG FT	VCG FT	RESULTANT ADJ WT-LTON	VCG-FT
100	HULL STRUCTURE	2950.4	36.2	264.29	23.00	360.3	1.36
200	PROP PLANT	779.9	9.6	322.28	15.41		
300	ELECT PLANT	280.0	3.4	286.16	29.53		
400	COMM + SURVEIL	305.2	3.7	201.02	24.72	56.7	.46
500	AUX SYSTEMS	866.4	10.6	290.95	28.26		
600	OUTFIT + FURN	648.8	8.0	264.50	30.42		
700	ARMAMENT	239.1	2.9	238.05	37.03	225.8	1.04
	ACQ WT MARGIN		0.0	272.36			

	ACQ KG MARGIN			+	.29		
	L I G H T S H I P	6069.7	74.4	272.36	24.80	642.8	2.86
F00	FULL LOADS	2090.7	25.6	294.95	12.53	40.4	.20
F10	CREW + EFFECTS	42.6		248.63	30.43		
F20	MISS REL EXPEN	40.4		232.76	39.41		
F30	SHIPS STORES	62.2		285.66	22.67		
F40	FUELS + LUBRIC	1889.5		298.66	11.41		
F50	FRESH WATER	56.0			5.74		
F60	CARGO						
M25	FUTURE GROWTH						
	FULL LOAD WT	8160.5	100.0	278.15	21.65	683.3	3.05

PRINTED REPORT NO. 11 - P+A WEIGHTS AND VCGS

ROW	PAYLOAD NAME / P+A WT KEY	WEIGHT ADDLTON	WEIGHT FAC,	VCG KEY	VCG ADD,FT	VCG FAC
31	FLT DECK					
	W100	6.00	0.00	BL	32.00	0.00
15	61 CELL VLS ARMOR - LEVEL II HY-80					
	W164	100.00	0.00	BL	38.44	0.00
24	FWD MAST RAM PANELS					
	W171	2.24	0.00	BL	90.00	0.00
25	AFT MAST RAM PANELS					
	W171	2.10	0.00	BL	85.00	0.00
27	LEAD BALLAST					
	W191	350.00	0.00	BL	30.00	0.00
30	CCC KW ADJ					
	W300	0.00	0.00	BL	0.00	0.00
29	CS KW ADJ					
	W400	0.00	0.00	BL	0.00	0.00
6	SSDS MK II					
	W410	6.00	0.00	BL	45.00	0.00
3	SPS-73 SURFACE SEARCH RADAR					
	W451	1.57	0.00	BL	75.63	0.00
1	SPS-49 2-D AIR SEARCH RADAR					
	W452	10.06	0.00	BL	69.63	0.00
2	SPS-48 3-D AIR SEARCH RADAR					
	W453	22.00	0.00	BL	65.00	0.00
5	MK XII AIMS IFF					
	W455	2.22	0.00	BL	65.63	0.00
7	SLQ-32(V)3 ACTIVE/PASSIVE ECM					
	W471	2.32	0.00	BL	74.72	0.00
8	SLQ-32(V)3 -- MK36 DLS W/ 4 LAUNCHERS					
	W471	1.38	0.00	BL	62.71	0.00

10	MK86 5IN GFCS INCL SPQ-9					
	W480	4.64	0.00	BL	85.95	0.00
11	SSDS MK II					
	W480	1.42	0.00	BL	58.95	0.00
4	(2) MK 95 NSSMS DIRECTORS					
	W482	4.40	0.00	BL	74.00	1.00
13	VLS WEAPON CONTROL SYSTEM					
	W482	0.70	0.00	BL	39.00	0.00
16	61 CELL MAGAZINE DEWATERING SYSTEM					
	W529	3.00	0.00	D6.5	-10.80	1.00
22	LAMPS MKIII : AVIATION FUEL SYSTEM					
	W542	6.86	0.00	BL	24.71	0.00
28	KW ADJUST					
	W700	0.00	0.00	BL	0.00	0.00
19	1X MK45 5IN/54 GUN [PALLET STRIKEDOWN]					
	W710	57.00	0.00	BL	29.03	0.00
17	1X MK15 20MM CIWS [VULCAN-PHALANX] & ENC					
	W711	7.50	0.00	BL	108.03	0.00
12	1X 8X MK41 VLS 61 CELL [EMPTY]					
	W720	147.80	0.00	BL	37.00	0.00
21	RAM LAUNCHER					
	W721	5.00	0.00	BL	58.00	0.00
14	VLS WEAPONS HANDLING					
	W722	1.00	0.00	BL	39.00	1.00
23	SPECIAL PURPOSE SYSTEMS					
	W790	7.48	0.00	BL	27.42	0.00
9	MK36 DLS SRBOC CANNISTERS -- 100 RDS					
	WF21	2.00	0.00	BL	28.06	0.00
18	MK15 20MM CIWS AMMO -- 16000 RDS					
	WF21	8.43	0.00	BL	118.06	0.00
20	1X MK45 5IN AMMO -- 600 RDS					
	WF21	30.00	0.00	BL	18.06	0.00

Appendix H

Radar Cross Section Calculations

ex-DECATUR

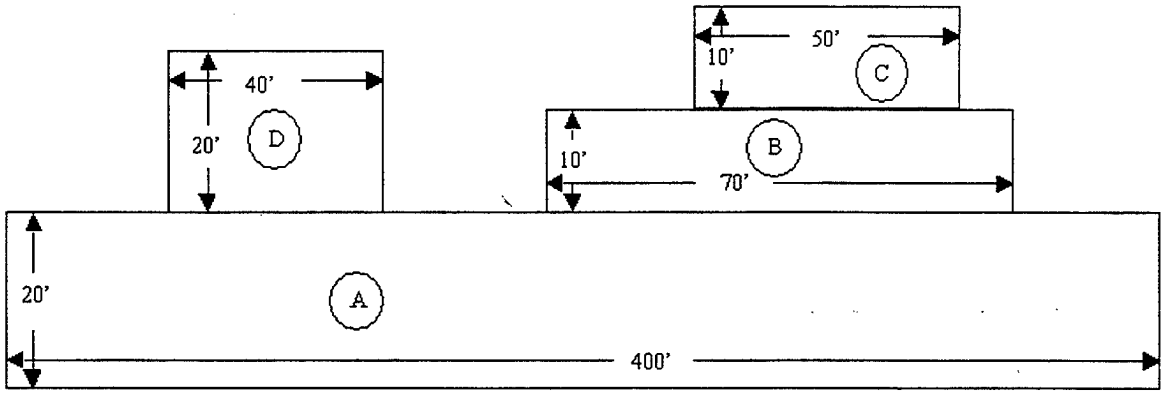

TABLE H-1

Block	Length [ft]	Height [ft]	Area [sq ft]
A	400	20	8000
B	70	10	700
C	50	10	500
D	40	20	800
Sum of Areas [sq ft]			10000
Sum of Areas [sq meters]			929.51

Estimate Aspect Averaged Radar Cross Section 4.1 [dBsm]:

** Valid for Soviet Frigate Size Targets

Estimate Aspect Averaged Radar Cross Section [sm]: 12589

Use 12000 square meters as approximate Radar Cross Section for ex-Decatur

USS O'BRIEN

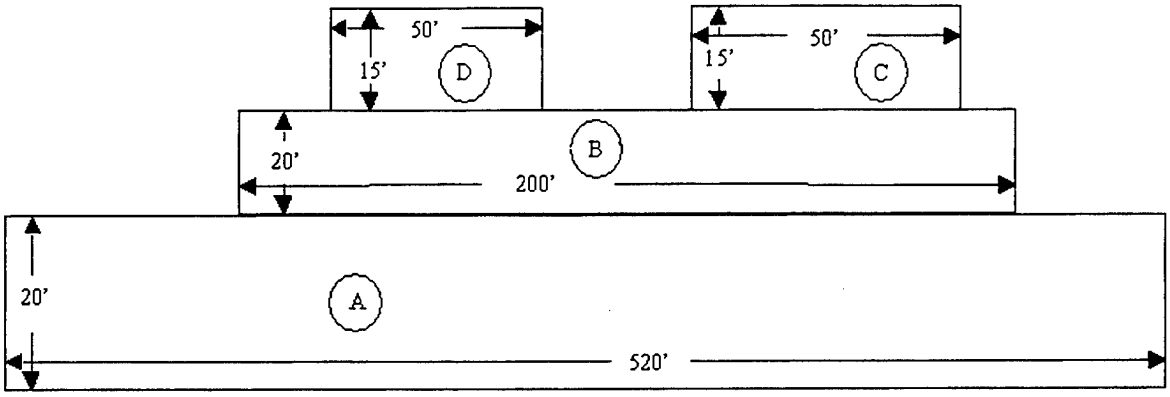

TABLE H-2

Block	Length [ft]	Height [ft]	Area [sq ft]
A	520	20	10400
B	200	20	4000
C	50	15	750
D	50	15	750
Sum of Areas [sq ft]			15900
Sum of Areas [sq meters]			1477.91

Estimate Aspect Averaged Radar Cross Section 4.5 [dBsm]:

** Valid for Soviet Destroyer Size Targets

Estimate Aspect Averaged Radar Cross Section [sm]: 31623

Use 30000 square meters as approximate
Radar Cross Section for USS O'Brien

Estimate 50% of RCS due to hull and superstructure geometry and 50% due to Sensors, Mast and Weapon contribution.

Geometry contribution [sq meter]: 15000

Skin Reflection: 1500
Skin Fraction: 0.1
Di/Tri-hedral Fraction: 0.9

S/M/W Contribution [sq meter]: 15000

TABLE H-3

Weapon Systems and Sensors.

5000 square meters for Weapons Systems contribution to RCS

30	MT 51 & 52: 15 sq meters each
12	MT 21 & 22: 6 sq meters each
16	NSSMS: 16 sq meters
58	sum

Use Directivity Factor for Weapon Systems = 100

5000 square meters for Sensor contribution to RCS

4	TAS: 2 sq meter + pedestal
6	SPS-40: 4 sq meter + pedestal
10	SPG-60: 8 sq meter + pedestal
5	SPQ-9: 3 sq meter + pedestal
3	Mk 91: 1 sq meter + pedestal
16	SLQ-32: 6 sq meter + pedestal=8 x2
44	sum

Use Directivity Factor for Sensors = 100

TABLE H-4: Surface Warfare Test Ship Radar Cross Section.

Line				
	Surface Warfare Test Ship Radar Cross Section Analysis			
	15000	Geometric		
1		1	Construction of Steps	Surface Area=42 sq meters. Smooth surfaces= no Directivity Factor.
2		-210	Steps hide Hangar Surfaces	42 sq meters x10 DF. X.5 for Avg Projected Area
3		-260	Angled Bulkhead around Missile Deck	26 sq meters x10 DF.
4		-350	Angled Bulkhead around Fantail	34 sq meters x10 DF.
5		-260	Install smooth wall on boat deck	11'x24'=264 sq ft=26 sq meter. x10 directivity factor.
6		-280	Barge Ramp Addition	24'x12'=28 sq meter. x10 directivity factor.
7		-175	Weax deck p-way below hangar enclosed.	Area=35 square meters, x10 for Directivity Factor. x0.5 for Projected Area
8		-4080	RAM coating (PCMS) on superstructure	Superstructure =5100 sq meters of RCS. PCMS is eliminates 80% of reflection.
9		-4160	Anechoic Panelling below maindeck	10'x560'=5600 sq ft=520 sq meter. x10 directivity factor. 80% effective.
10		-750	Remove clutter from skin of ship	Multitude of tiny di/tri-hedrals: 5% of total
11				
12				
13				
14	-10524	Net Change		
15	4476	As Modified Geometric Contribution		
16				
17	15000	S/MW		
18		0	CIWS Moved but same RCS Contribution	
19		40	Addition of Camera Mount	Mount is 6x6ft. Area is 4 sq meters x10 for dihedral effects.
20		100	Addition of Camera	Camera area =1. X100 for Sensor Directivity
21		-1250	Remove Excess mast	Entire mast is 1/3 of S/MW=5000 sq meters. Remove about 1/4 of volume
22		-3000	RAM Panel Mast	3750 sq meter of mast remain. RAM Panelling eliminated 80% of reflection
23		600	Addition of RAM	7x10ft launcher and pedestal. Area is 6 sq meters. X100 for Directivity.
24		-600	Remove TAS and SPS-40	TAS area=2 sq m. 40 area=4 sq m. x100 for reflective shaping.
25		2200	Addition of SPS-48 and 49	SPS-48 area=10 sq m. 49 area=12 sq m. x100 for reflective shaping.
26		-1600	Remove Mk 29 NSSML	16 sq m. X100 for Directivity Factor
27		300	Addition of Mk91 Director	Approx 1 sq meter size+ pedestal, smooth surfaces, x100 Directivity Factor
28				
29	-3210	Net Change		
30	11790	As Modified S/MW Contribution		
31				
32	16266	SWTS Estimated Total RCS		
33	54.2	of Original RCS		

TABLE H-5: Alternative A Radar Cross Section.

Alternative A

15000	Geometric		
	1	Addition of Camera Mount Pedestal	6x6ft at platform, 10x10ft footprint, 20ft high, no di/tri-hedrals sloped approx 10 degrees, assume sidelobe is 1% of mainbeam reflection
	-75	Blockage of Hangar by CMP	160 sq ft=15 sq meter blocked *10 Directivity Factor, x.5 for Projected Area
	300	Addition of Mk91 Director on Fwd Mast	Approx 1 sq meter size+ pedestal, smooth surfaces, x100 Directivity Factor
	-750	Remove clutter from skin of ship	Multitude of tiny di/tri-hedrals: 5% of total
	-400	Streamline port boat deck	Boat & Davit area=40 sq m. X10 directivity factor.
-924	Net Change		
14076	As Modified Geometric Contribution		

15000	S/M/W		
	0	CIWS Not Moved	
	40	Addition of Camera Mount	Mount is 6x6ft. Area is 4 sq meters x10 for dihedral effects.
	100	Addition of Camera	Camera area =1. X100 for Sensor Directivity
	-1250	Remove Excess mast	Entire mast is 1/3 of S/M/W=5000 sq meters. Remove about 1/4 of volume
	600	Addition of RAM	7x10ft launcher and pedestal. Area is 6 sq meters. X100 for Directivity.
	-600	Remove TAS and SPS-40	TAS area=2 sq m. 40 area=4 sq m. x100 for reflective shaping.
	2200	Addition of SPS-48 and 49	SPS-48 area=10 sq m. 49 area=12 sq m. x100 for reflective shaping.
	-1500	Remove MT52	15 sq m. x100 for Directivity Factor
	-1600	Remove Mk 29 NSSMS Launcher	16 sq m. X100 for Directivity Factor
-2010	Net Change		
12990	As Modified S/M/W Contribution		

27066	Alternative A Estimated Total RCS
90.22	of Original RCS

TABLE H-6: Alternative B Radar Cross Section.

Alternative B

15000	Geometric		
	1	Addition of CIWS Mount Pedestal	6x6ft at platform, 8x8ft footprint, 6ft high, no di/tri-hedrals sloped approx 10 degrees, assume sidelobe is 1% of mainbeam reflection
	-75	Blockage of Hangar by CMP	160 sq ft=15 sq meter blocked *10 Directivity Factor, *.5 Projected Area
	-750	Remove clutter from skin of ship	Multitude of tiny di/tri-hedrals: 5% of total
	12	Install crane for boat ops	6 sq meter area. X10 Directivity Factor.
		RAM blanket over crane	RAM Blanket 80% effective.
	-4000	RAM coating (PCMS) on superstructure	Superstructure is 1/3 of total surface=5000 sq meters of RCS. PCMS is eliminates 80% of reflection.
	-198	False, sloped forward superstructure	Area=100 square meters, PCMS so RCS=200 sq meters sloped approx 10 degrees, assume sidelobe is 1% of mainbeam reflection
	-400	Weax deck p-way below hangar enclosed.	Area=40 square meters, x10 for Directivity Factor.
	120	Barge Ramp Addition	8mx3m waterline in wet deck=24 sq meter. X10 Directivity Factor. x.5 Projected Average Area.
-5290	Net Change		
9710	As Modified Geometric Contribution		

15000	S/M/W		
	0	CIWS Moved but same RCS Contribution	
	40	Addition of Camera Mount	Mount is 6x6ft. Area is 4 sq meters x10 for dihedral effects.
	100	Addition of Camera	Camera area =1. X100 for Sensor Directivity
	-1250	Remove Excess mast	Entire mast is 1/3 of S/M/W=5000 sq meters. Remove about 1/4 of volume
	-3000	RAM Panel Mast	3750 sq meter of mast remain. RAM Panelling eliminated 80% of reflection
	600	Addition of RAM	7x10ft launcher and pedestal. Area is 6 sq meters. X100 for Directivity.
	-600	Remove TAS and SPS-40	TAS area=2 sq m. 40 area=4 sq m. x100 for reflective shaping.
	2200	Addition of SPS-48 and 49	SPS-48 area=10 sq m. 49 area=12 sq m. x100 for reflective shaping.
	-1500	Remove MT52	15 sq m. x100 for Directivity Factor
	-1600	Remove Mk 29 NSSML	16 sq m. X100 for Directivity Factor
	300	Addition of Mk91 Director	Approx 1 sq meter size+ pedestal, smooth surfaces, x100 Directivity Factor
-4710	Net Change		
10290	As Modified S/M/W Contribution		

20000	Alternative B Estimated Total RCS
66.67	of Original RCS

TABLE H-7: Alternative C Radar Cross Section.

Alternative C			
15000	Geometric		
	1	Construction of Steps	Surface Area=42 sq meters. Smooth surfaces= no Directivity Factor. sloped approx 10 degrees, assume sidelobe is 1% of mainbeam reflection
	-210	Steps hide Hangar Surfaces	42 sq meters x 10 Directivity Factor. X.5 for Avg Projected Area
	-750	Remove clutter from skin of ship	Multitude of tiny di/tri-hedrals: 5% of total
	-400	Install RAM Screen over Harpoon deck.	8'x50'=400sq ft=40 sq meter. X10 directivity factor.
	-750	Install awning over boat deck	16'x50'=800sq ft=75sq meter. x10 directivity factor. RAM Blanket 80% effective.
	-4000	RAM coating (PCMS) on superstructure	Superstructure is 1/3 of total surface=5000 sq meters of RCS. PCMS is eliminates 80% of reflection.
	-198	False, sloped forward superstructure	Area=100 square meters, PCMS so RCS=200 sq meters sloped approx 10 degrees, assume sidelobe is 1% of mainbeam reflection
	-3840	Anechoic Panelling below maindeck	10'x520'=5200sq ft=480 sq meter. x10 directivity factor. 80% effective.
	-400	Weax deck p-way below hangar enclosed.	Area=40 square meters, x10 for Directivity Factor.
	120	Barge Ramp Addition	8mx3m waterline in wet deck=24 sq meter. X10 Directivity Factor. x.5 Projected Average Area.
-10218	Net Change		
4782	As Modified Geometric Contribution		
15000	S/M/W		
	0	CIWS Moved but same RCS Contribution	
	40	Addition of Camera Mount	Mount is 6x6ft. Area is 4 sq meters x10 for dihedral effects.
	100	Addition of Camera	Camera area =1. X100 for Sensor Directivity
	-1250	Remove Excess mast	Entire mast is 1/3 of S/M/W=5000 sq meters. Remove about 1/4 of volume
	-3000	RAM Panel Mast	3750 sq meter of mast remain. RAM Panelling eliminated 80% of reflection
	600	Addition of RAM	7x10ft launcher and pedestal. Area is 6 sq meters. X100 for Directivity.
	-600	Remove TAS and SPS-40	TAS area=2 sq m. 40 area=4 sq m. x100 for reflective shaping.
	2200	Addition of SPS-48 and 49	SPS-48 area=10 sq m. 49 area=12 sq m. x100 for reflective shaping.
	-1600	Remove Mk 29 NSSML	16 sq m. X100 for Directivity Factor
	300	Addition of Mk91 Director	Approx 1 sq meter size+ pedestal, smooth surfaces, x100 Directivity Factor
-3210	Net Change		
11790	As Modified S/M/W Contribution		
16572	Alternative C Estimated Total RCS		
55.24	of Original RCS		

TABLE H-8: Alternative D Radar Cross Section.

Alternative D

15000	Geometric		
	1	Construction of Steps	Surface Area=42 sq meters. Smooth surfaces= no Directivity Factor. sloped approx 10 degrees, assume sidelobe is 1% of mainbeam reflection
	-210	Steps hide Hangar Surfaces	42 sq meters x 10 Directivity Factor. X.5 for Avg Projected Area
	-750	Remove clutter from skin of ship	Multitude of tiny di/tri-hedrals: 5% of total
	-400	Install RAM Screen over Harpoon deck.	8'x50'=400sq ft=40 sq meter. X10 directivity factor.
	-750	Install awning over boat deck	16'x50'=800sq ft=75sq meter. x10 directivity factor. RAM Blanket 80% effective.
	-4000	RAM coating (PCMS) on superstructure	Superstructure is 1/3 of total surface=5000 sq meters of RCS. PCMS is eliminates 80% of reflection.
	-198	False, sloped forward superstructure	Area=100 square meters, PCMS so RCS=200 sq meters sloped approx 10 degrees, assume sidelobe is 1% of mainbeam reflection
	-359	Add Advanced Stacks	Area=2x18=36 square meters. x10 Directivity Factor=360 square meters covered. New Stacks are 45 square meters. Smooth surfaces= no Directivity Factor. sloped approx 10 degrees, assume sidelobe is 1% of mainbeam reflection
	-130	Reduced Bridge Wings	4'x35'=140 sq ft=13 sq meter. x10 directivity factor.
	-3840	Anechoic Panelling below maindeck	10'x520'=5200sq ft=480 sq meter. x10 directivity factor. 80% effective.
	-242	Hangar narrowed and sloped	24'x55'=1320sq ft=123sq meters. x10 Directivity Factor. 80% was accounted in PCMS calc. 1% of reflection in sidelobe.
	120	Barge Ramp Addition	8mx3m waterline in wet deck=24 sq meter. X10 Directivity Factor. x.5 Projected Average Area.
-10549	Net Change		
4451	As Modified Geometric Contribution		

15000	S/M/W		
	0	CIWS Moved but same RCS Contribution	
	40	Addition of Camera Mount	Mount is 6x6ft. Area is 4 sq meters x10 for dihedral effects.
	100	Addition of Camera	Camera area =1. X100 for Sensor Directivity
	-4950	AEM/S (Mast contribution)	AEM/S Area is fwd, aft. All surfaces sloped. 1% reflected in sidelobes.
	600	Addition of RAM	7x10ft launcher and pedestal. Area is 6 sq meters. X100 for Directivity.
	-600	Remove TAS and SPS-40	TAS area=2 sq m. 40 area=4 sq m. x100 for reflective shaping.
	2200	Addition of SPS-48 and 49	SPS-48 area=10 sq m. 49 area=12 sq m. x100 for reflective shaping.
	-1600	Remove Mk 29 NSSML	16 sq m. X100 for Directivity Factor
	300	Addition of Mk91 Director	Approx 1 sq meter size+ pedestal, smooth surfaces, x100 Directivity Factor
	-2160	AEM/S (Sensor contribution)	SPS-48 (10 sq meter), 49 (12 sq meter),& SPQ-9 (5 sq meter) enclosed in AEM/S. x100 Directivity Factor. 80% effective at eliminating return.
-6070	Net Change		
8930	As Modified S/M/W Contribution		

13381	Alternative D Estimated Total RCS
44.6	of Original RCS

Appendix I

Field of View Diagrams

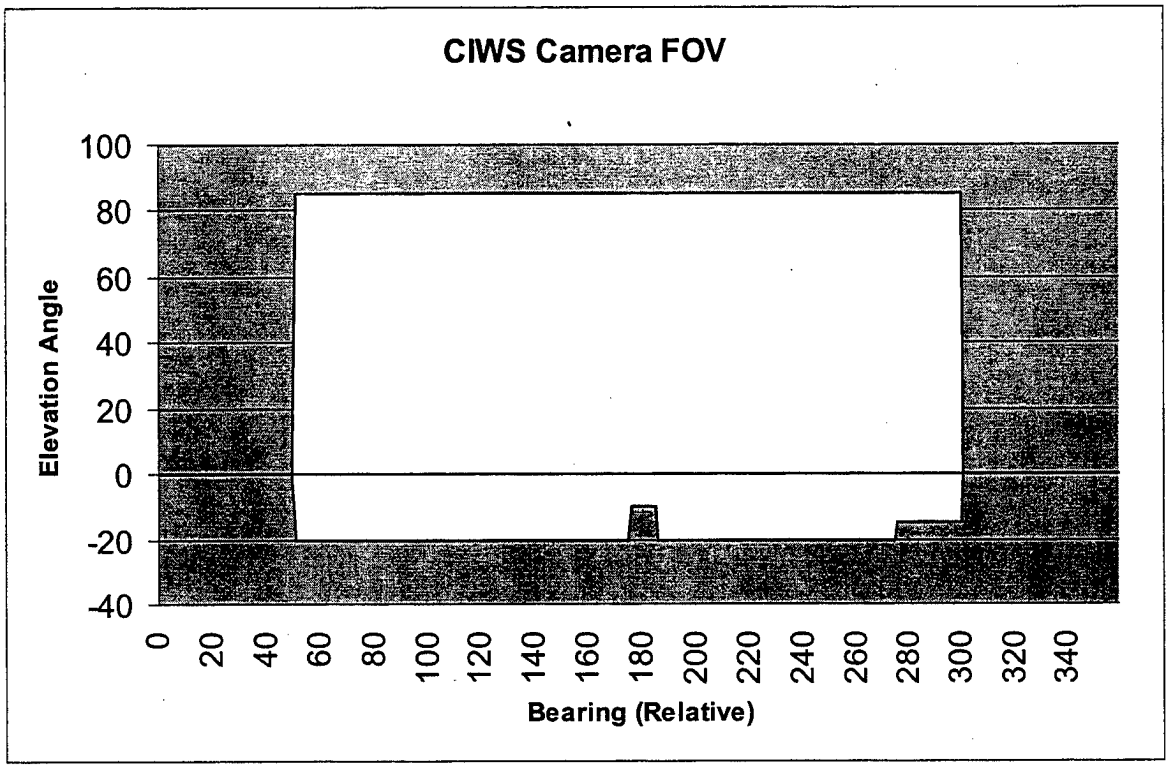
CIWS Camera FOV
Elevation Angle
100
80
60
40
20
0
-20
-40
0
20
40
60
80
100
120
140
160
180
200
220
240
260
280
300
320
340
Bearing (Relative)

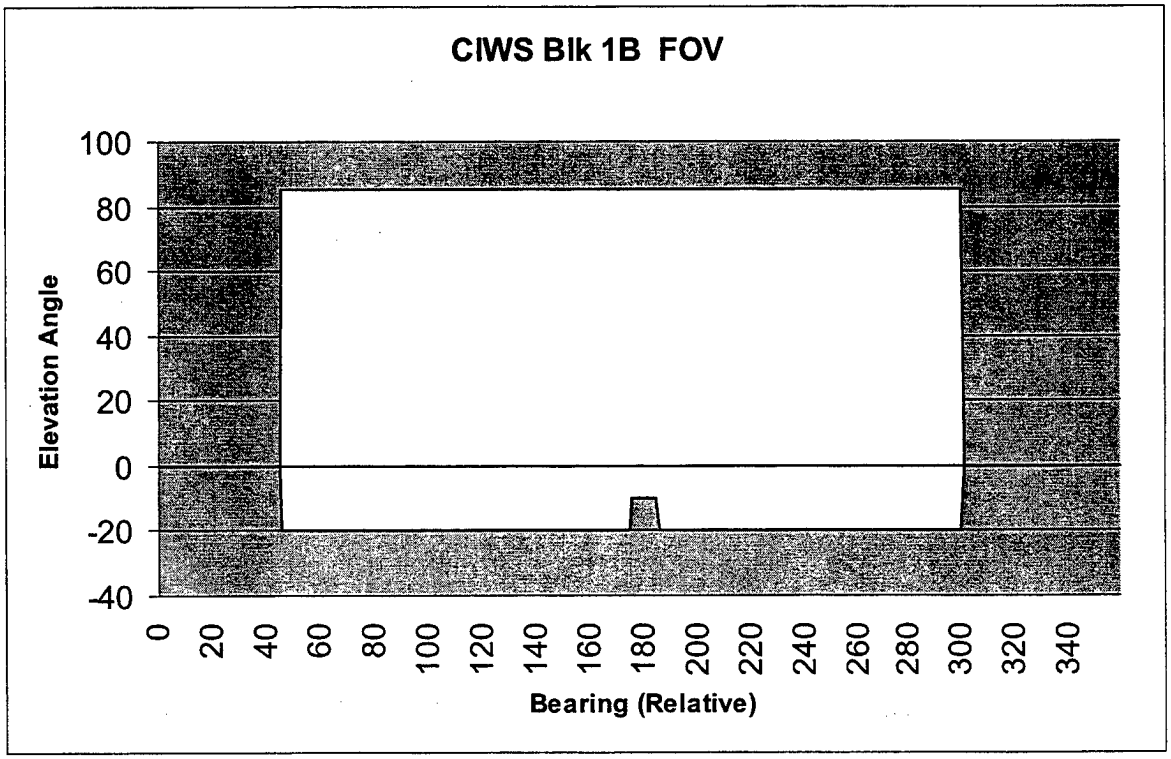
CIWS Blk 1B FOV
Elevation Angle
100
80
60
40
20
0
-20
-40
0
20
40
60
80
100
120
140
160
180
200
220
240
260
280
300
320
340
Bearing (Relative)

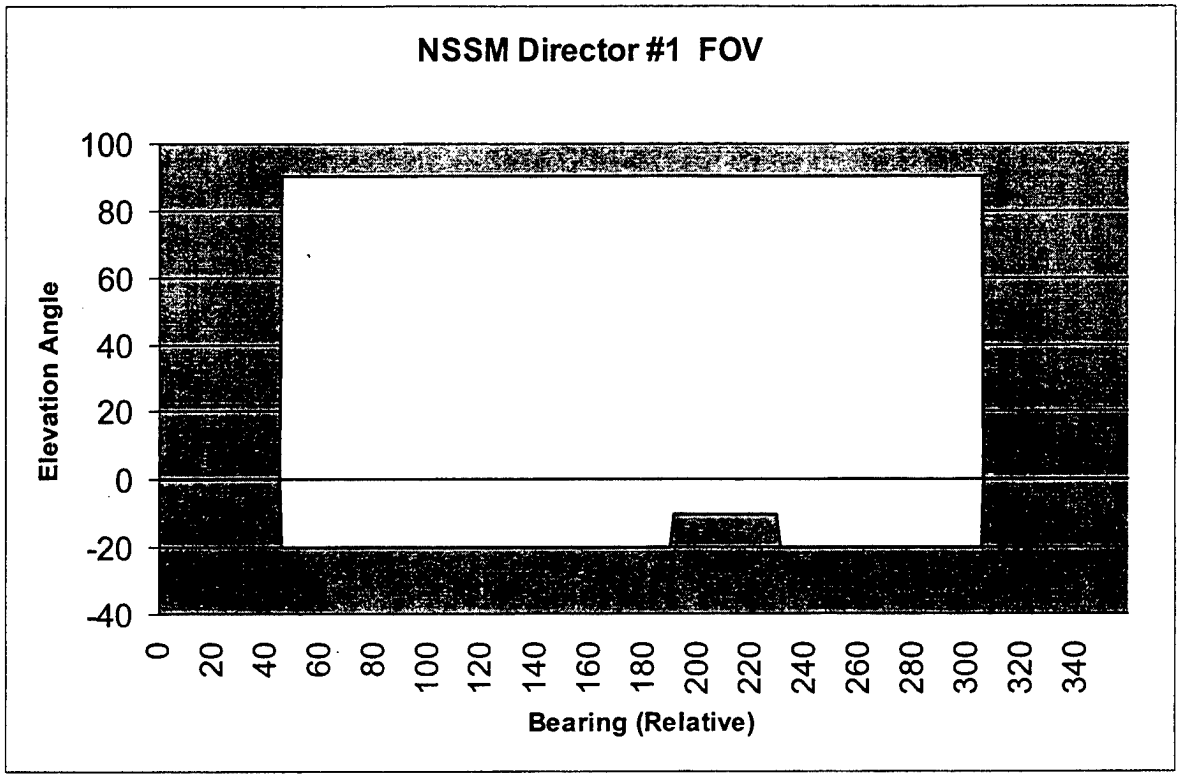
NSSM Director #1 FOV
Elevation Angle
100
80
60
40
20
0
-20
-40
0
20
40
60
80
100
120
140
160
180
200
220
240
260
280
300
320
340
Bearing (Relative)

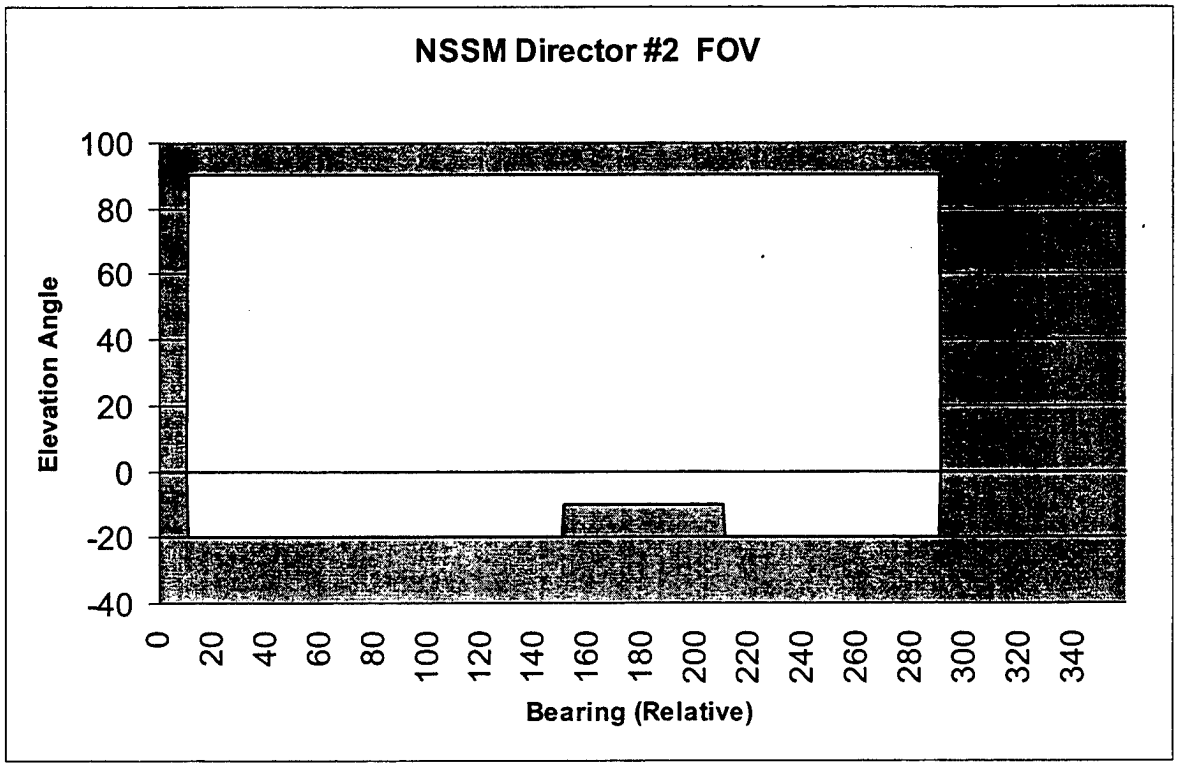
NSSM Director #2 FOV
Elevation Angle
100
80
60
40
20
0
-20
-40
0
20
40
60
80
100
120
140
160
180
200
220
240
260
280
300
320
340
Bearing (Relative)

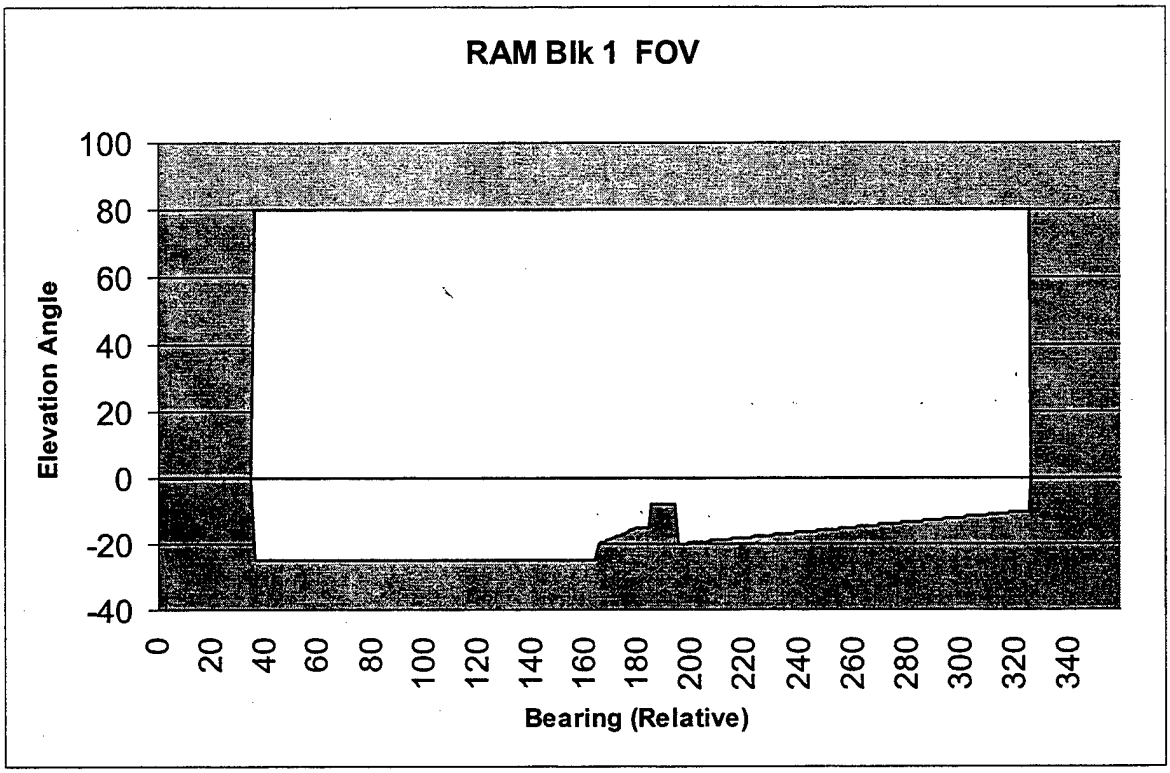
RAM Blk 1 FOV
Elevation Angle
100
80
60
40
20
0
-20
-40
0
20
40
60
80
100
120
140
160
180
200
220
240
260
280
300
320
340
Bearing (Relative)

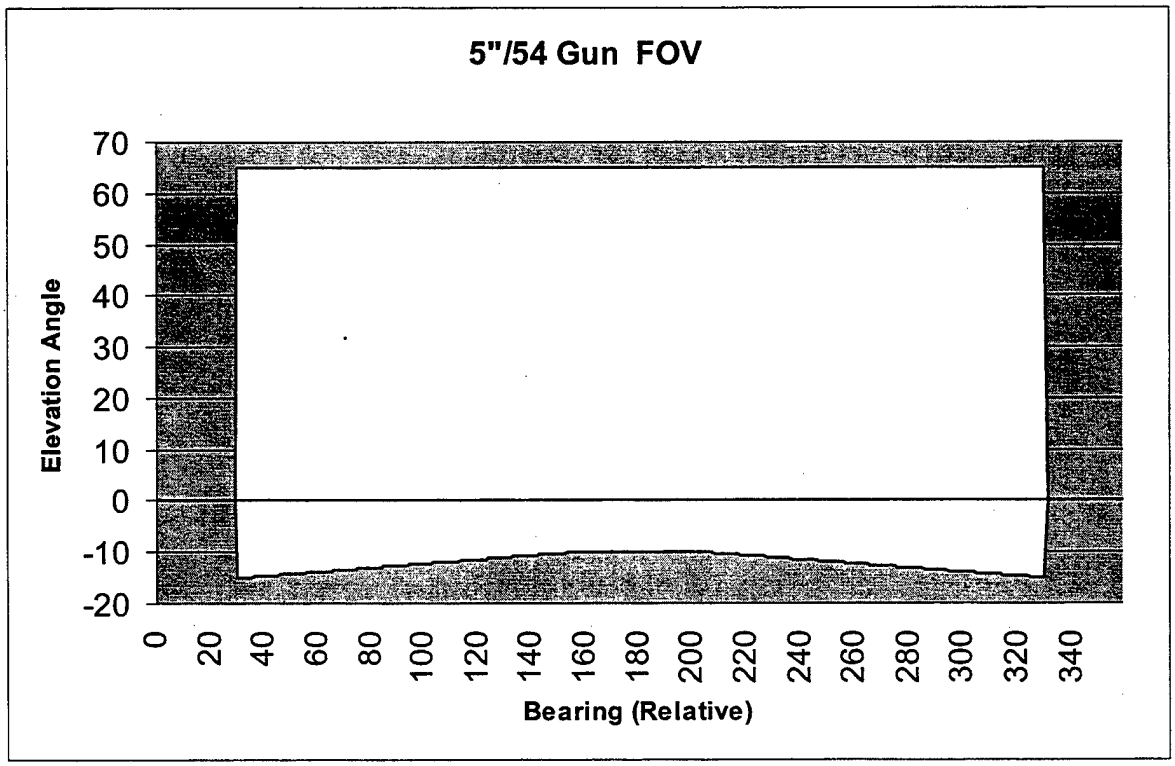
5"/54 Gun FOV
Elevation Angle
70
60
50
40
30
20
10
0
-10
-20
0
20
40
60
80
100
120
140
160
180
200
220
240
260
280
300
320
340
Bearing (Relative)

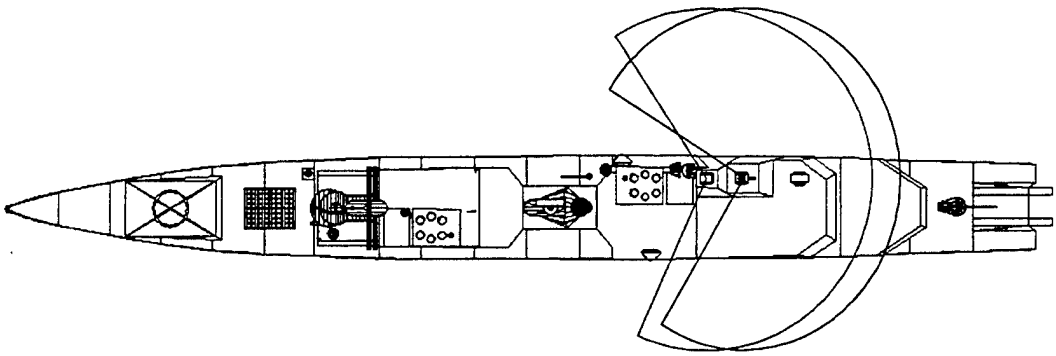

Blue: CIWS Block 1B
Orange: CIWS Camera

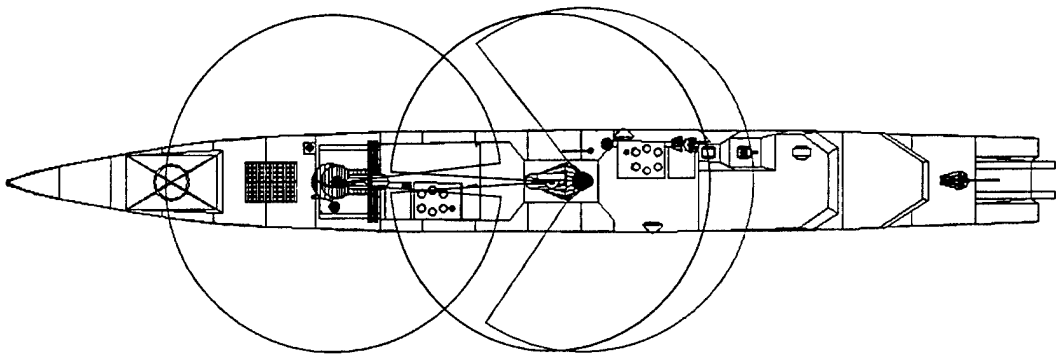

Blue: SPS-48E
Violet: SPQ-9B
Red: SPS-49

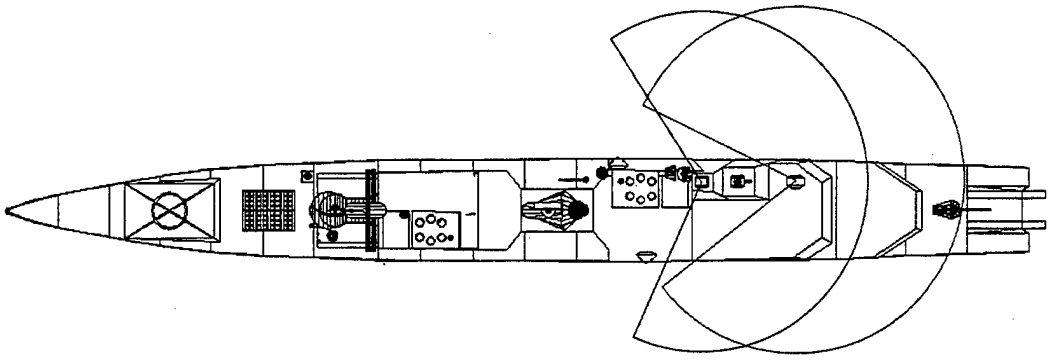

Violet: RAM
Orange: CIWS Camera

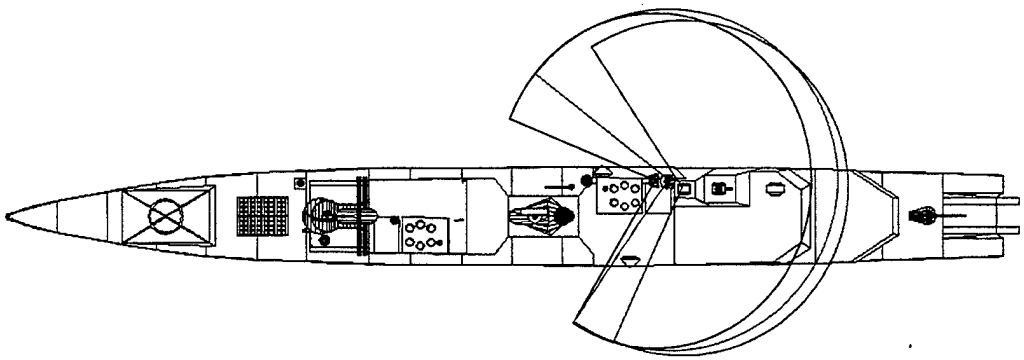

Orange: CIWS Camera
Violet: Mk 95 #1
Blue: Mk 95 #2

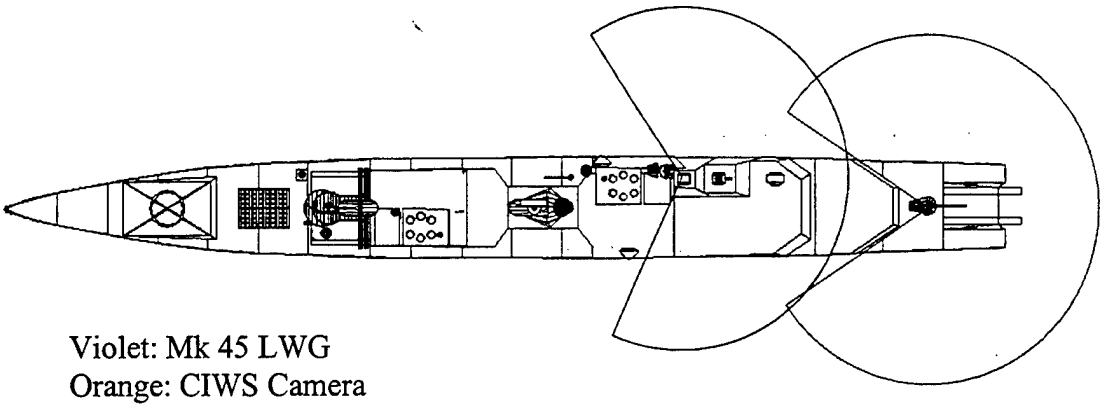

Violet: Mk 45 LWG
Orange: CIWS Camera

Initial Distribution List

Dudley Knox Library, Code 52 Naval Postgraduate School 411 Dyer Road Monterey, CA 93943	2
Defense Technical Information Center 8725 John J. Kingman Road, STE 0944 Fort Belvior, VA 22060-6218	2
Research Administration Office Naval Postgraduate School Monterey, CA 93943	1
RADM George Yount, USN Commander Naval Sea Systems Command ATTN: SEA 03 2531 Jefferson Davis Highway Arlington, VA 20362	1
RADM William Cobb, USN PEO TAD and Surface Combatants c/o Naval Sea Systems Command 2531 Jefferson Davis Hwy Arlington, VA 22242	1
RADM Michael Mullen, USN Director Surface Warfare Division 2000 Navy Pentagon Washington, DC 20350	1
Captain A. J. Mancini, USN SEA 03D Naval Sea Systems Command 2531 Jefferson Davis Highway Arlington, VA 20362	1
Mr. Ed Comstock SEA 03DB Naval Sea Systems Command 2531 Jefferson Davis Highway Arlington, VA 20362	1

Capt. Raymond S. McCord, USN 1
Prof Naval Construction, Dept of Ocean Eng
Massachusetts Institute of Technology
Cambridge, MA 02139

CAPT James W. Phillips, USN 1
Port Hueneme Div.
Naval Surface Warfare Center
5363 Missile Way, Bldg 1153
Port Hueneme, CA 93043-4307

CAPT Bernard J. Cramp, USN 1
Port Hueneme Div.
Naval Surface Warfare Center
5363 Missile Way, Bldg 1153
Port Hueneme, CA 93043-4307

LCDR Jim Childs, USN 3
Port Hueneme Div.
Naval Surface Warfare Center
5363 Missile Way, Bldg 1153
Port Hueneme, CA 93043-4307

Mr. Robert Keane (Code 20) 1
c/o Commander
Carderock Division
Naval Surface Warfare Center
Bethesda, MD 20084-5000

Professor David Netzer 1
Dean of Research
Naval Postgraduate School
Monterey, CA 93943

Prof. Terry McNelley
Chairman, Department of Mechanical Engineering 1
Naval Postgraduate School
Monterey, CA 93943-5107

Professor William Maier 1
Chairman, Physics Dept.
Naval Postgraduate School
Monterey, CA 93943

Professor Gordon Schacher Institute for Joint Warfare Analysis Naval Postgraduate School Monterey, CA 93943	1
Professor Robert Harney Physics Dept. Naval Postgraduate School Monterey, CA 93943	2
Professor C. N. Calvano Code ME/Ca Naval Postgraduate School Monterey, CA 93943-5107	12
Mr. Bruce Wintersteen c/o Commander Carderock Division1 Naval Surface Warfare Center Bethesda, MD 20084-5000	1
Mr. David Byers c/o Commander, Carderock Division Naval Surface Warfare Center 9500 MacArthur Boulevard West Bethesda, MD 20817-5700	1
Mr. J. Robert Bost Director Human Sys Integration Div NAVSEA 05D 2531 Jefferson Davis Hwy Arlington, VA 22242-5160	1
Mr. Pat Hudson c/o Commander, Carderock Division Naval Surface Warfare Center 9500 MacArthur Boulevard West Bethesda, MD 20817-5700	1
Mr. Frank White 3436 Talbot St. San Diego, CA 92106-2946	1

Mr. Hal Hultgren 1
Code 601
c/o NUWC, Newport Div.
1176 Howell St.
Newport, RI 02841

Capt. Dennis Mahoney, USN (Ret.) 1
Director, Fellows Program
System Design and Management
MIT E40-435,
Cambridge, MA

Mr. Neil Baron 1
c/o NAVSEA 53R
Naval Sea Systems Command
2531 Jefferson Davis Hwy
Arlington, VA 22242-5160

CDRr T. J. Benedict, USN 1
c/o NAVSEA 53R
Naval Sea Systems Command
2531 Jefferson Davis Hwy
Arlington, VA 22242-5160

CDR Andy King, USN 1
Director Surface Warfare Division
2000 Navy Pentagon
Washington, DC 20350

CDR Paul Cruz, USN
PMS 444
c/o Naval Sea Systems Command
2531 Jefferson Davis Hwy
Arlington, VA 22242

LTjg Ioannis Farsaris, HN 1
4 Prince George St.
Agios Nikolaos
Crete, 72100
Greece

LCDR David Ruley, USN 1
c/o Code 34
Naval Postgraduate School

LT Phil Malone, USN c/o Code 34 Naval Postgraduate School	1
LT David Wickersham, USN c/o Code 34 Naval Postgraduate School	1
LT Nathan York, USN c/o Code 34 Naval Postgraduate School	1