Loss of Pitch Control During Takeoff
Air Midwest Flight 5481
Raytheon (Beechcraft) 1900D, N233YV
Charlotte, North Carolina
January 8, 2003

DISTRIBUTION STATEMENT A
Approved for Public Release
Distribution Unlimited

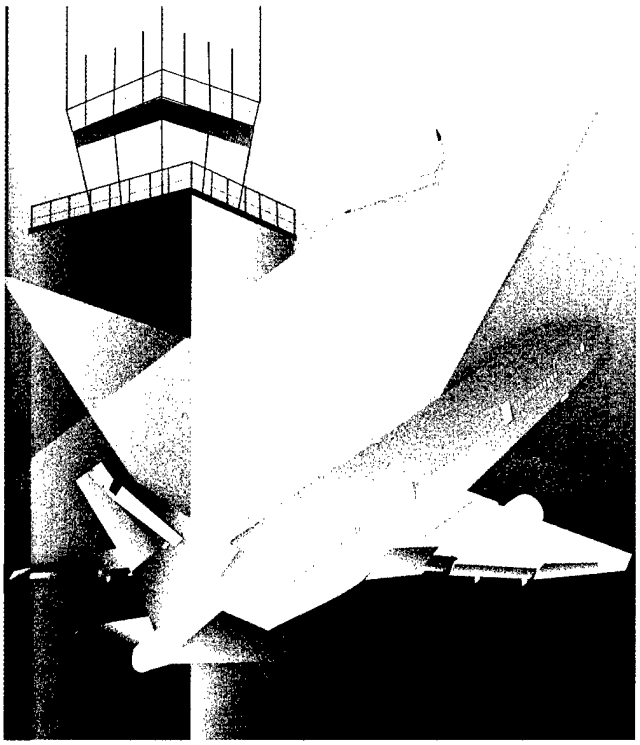

Aircraft Accident Report

NTSB/AAR-04/01

PB2004-910401
Notation 7545B

BEST AVAILABLE COPY

20040715 198

National Transportation Safety Board
Washington, D.C.

Aircraft Accident Report

Loss of Pitch Control During Takeoff
Air Midwest Flight 5481
Raytheon (Beechcraft) 1900D, N233YV
Charlotte, North Carolina
January 8, 2003

NTSB/AAR-04/01
PB2004-910401
Notation 7545B
Adopted February 26, 2004

National Transportation Safety Board
490 L'Enfant Plaza, S.W.
Washington, D.C. 20594

National Transportation Safety Board. 2004. *Loss of Pitch Control During Takeoff, Air Midwest Flight 5481, Raytheon (Beechcraft) 1900D, N233YV, Charlotte, North Carolina, January 8, 2003.* Aircraft Accident Report NTSB/AAR-04/01. Washington, DC.

Abstract: This report explains the accident involving Air Midwest (doing business as US Airways Express) flight 5481, a Raytheon (Beechcraft) 1900D, N233YV, which crashed shortly after takeoff from Charlotte-Douglas International Airport, Charlotte, North Carolina. The safety issues discussed in this report include maintenance work practices, oversight, and quality assurance; maintenance training; aircraft weight and balance programs; Federal Aviation Administration oversight; and cockpit voice recorders on Beech 1900D airplanes.

The National Transportation Safety Board is an independent Federal agency dedicated to promoting aviation, railroad, highway, marine, pipeline, and hazardous materials safety. Established in 1967, the agency is mandated by Congress through the Independent Safety Board Act of 1974 to investigate transportation accidents, determine the probable causes of the accidents, issue safety recommendations, study transportation safety issues, and evaluate the safety effectiveness of government agencies involved in transportation. The Safety Board makes public its actions and decisions through accident reports, safety studies, special investigation reports, safety recommendations, and statistical reviews.

Recent publications are available in their entirety on the Web at <http://www.ntsb.gov>. Other information about available publications also may be obtained from the Web site or by contacting:

National Transportation Safety Board
Public Inquiries Section, RE-51
490 L'Enfant Plaza, S.W.
Washington, D.C. 20594
(800) 877-6799 or (202) 314-6551

Safety Board publications may be purchased, by individual copy or by subscription, from the National Technical Information Service. To purchase this publication, order report number **PB2004-910401** from:

National Technical Information Service
5285 Port Royal Road
Springfield, Virginia 22161
(800) 553-6847 or (703) 605-6000

The Independent Safety Board Act, as codified at 49 U.S.C. Section 1154(b), precludes the admission into evidence or use of Board reports related to an incident or accident in a civil action for damages resulting from a matter mentioned in the report.

Contents

Abbreviations viii

Executive Summary x

1. Factual Information 1
1.1 History of Flight 1
1.1.1 Maintenance Events Preceding the Accident Flight 4
1.2 Injuries to Persons 8
1.3 Damage to Airplane 8
1.4 Other Damage 8
1.5 Personnel Information 9
1.5.1 The Captain 9
1.5.2 The First Officer 10
1.5.3 The Maintenance Personnel 11
1.5.3.1 The Quality Assurance Inspector 11
1.5.3.2 The Foreman 12
1.5.3.3 The Mechanic 12
1.5.3.4 The Raytheon Aerospace Site Manager 13
1.5.3.5 The Air Midwest Regional Site Manager 14
1.6 Airplane Information 14
1.6.1 Pitch Control System 15
1.6.1.1 Pitch Trim Control System 19
1.6.2 Maintenance Program 19
1.6.3 Elevator Control System Rigging Procedure 20
1.6.3.1 Rigging Procedure at the Time of the Accident 20
1.6.3.2 Applicable Steps That Were Skipped During Maintenance 22
1.6.3.3 Revised Rigging Procedure 23
1.6.4 Weight and Balance 26
1.7 Meteorological Information 28
1.8 Aids to Navigation 28
1.9 Communications 28
1.10 Airport Information 28
1.10.1 Aircraft Rescue and Firefighting 29
1.10.2 Air Traffic Control 30
1.11 Flight Recorders 31
1.11.1 Cockpit Voice Recorder 31
1.11.1.1 Safety Recommendations A-97-36 and A-02-25 32
1.11.2 Flight Data Recorder 32
1.11.2.1 Flight Data Recorder Study 33
1.12 Wreckage and Impact Information 34
1.12.1 General Wreckage Description 34
1.12.2 Fuselage 35
1.12.3 Engines 36
1.12.4 Pitch Control System 37

1.12.4.1 Pitch Trim Control System 39
1.13 Medical and Pathological Information 39
1.14 Fire 39
1.15 Survival Aspects 40
1.15.1 Emergency Response 40
1.16 Tests and Research 42
1.16.1 Ground Tests 42
1.16.1.1 Baseline Configuration 42
1.16.1.2 Turnbuckle Length Adjustments 42
1.16.1.3 Cable Tension Adjustment Procedural Errors 43
1.16.1.4 Cable Stretch 43
1.16.2 Airplane Performance Study 43
1.16.2.1 Flight 5481 Weight and Balance Study 44
1.16.2.1.1 Air Midwest Weight and Balance Program 44
1.16.2.1.2 Airplane Component Buildup Method 44
1.16.2.1.3 Takeoff Ground Roll Weight Analysis 46
1.16.2.2 Load Manifest Study 47
1.16.2.3 Elevator Control Authority Study 48
1.16.2.3.1 Relationship Between Pitch Control Position and Actual Elevator Position 48
1.16.2.3.2 Available Elevator Travel 50
1.16.2.4 Beech 1900D Simulation Studies 50
1.16.2.4.1 Elevator Required to Match Accident Flight Data 51
1.16.2.4.2 Elevator Required to Establish Controlled Flight 52
1.16.2.4.3 Kinematics Extraction 52
1.16.2.4.4 Simulator Trims 53
1.17 Organizational and Management Information 54
1.17.1 Air Midwest 54
1.17.1.1 Air Midwest Maintenance Training Program 55
1.17.1.2 Huntington Maintenance Station Operations 56
1.17.1.3 Air Midwest Audits of the Huntington Maintenance Station 58
1.17.1.4 Postaccident Actions 59
1.17.2 Raytheon Aerospace 60
1.17.2.1 Contract Between Raytheon Aerospace and Air Midwest 62
1.17.3 Structural Modification and Repair Technicians 62
1.17.3.1 Contract Between Structural Modification and Repair Technicians and Raytheon Aerospace 63
1.17.4 Federal Aviation Administration Oversight 63
1.17.4.1 Continuing Analysis and Surveillance System 65
1.17.4.2 Correspondence From the Federal Aviation Administration to Air Midwest 66
1.17.5 Raytheon Aircraft Company 68
1.18 Additional Information 68
1.18.1 Weight and Balance Procedures 68
1.18.1.1 Federal Aviation Administration 68
1.18.1.1.1 Postaccident Average Weight Survey 70
1.18.1.2 Air Midwest 72
1.18.1.2.1 Postaccident Weight and Balance Revisions 74
1.18.1.3 US Airways Express 75

1.18.2 Federal Aviation Administration Emergency Airworthiness Directive 2003-03-18 76
1.18.3 Federal Aviation Administration Guidance for On-the-Job Training 78
1.18.4 Other Related Accidents 79
1.18.4.1 Ryan Air Service Flight 103, Homer, Alaska 79
1.18.4.2 ValuJet Airlines Flight 592, Everglades, Near Miami, Florida 80
1.18.4.2.1 Safety Recommendation A-97-70 81
1.18.4.2.2 Safety Recommendation A-97-74 82
1.18.4.3 Fine Airlines Flight 101, Miami, Florida 83
1.18.4.3.1 Safety Recommendation A-98-49 83
1.18.4.4 Emery Airlines Flight 17, Rancho Cordova, California 84
1.18.4.4.1 Safety Recommendation A-03-31 85
1.18.4.5 Colgan Air Flight 9446, Yarmouth, Massachusetts 85
1.18.4.5.1 Federal Aviation Administration Airworthiness Directive 2003-20-10 87
1.18.4.6 CommutAir Flight 8718, Albany, New York 87
1.18.5 Human Factors Research 89
1.18.6 Other Passenger and Baggage Weight Information 90
1.18.6.1 Civil Aviation Authority Report 90
1.18.6.2 Australian Department of Transport and Communications Report 91
1.18.6.3 Civil Aviation Authority of New Zealand Survey 92

2. Analysis 94
2.1 General 94
2.2 Loading and Preflight Activities 94
2.3 Restricted Downward Elevator Travel 96
2.3.1 Conspicuity of the Elevator Control System Misrig 97
2.3.2 Adequacy of On-the-Job Training Provided to the Mechanic 98
2.3.3 Skipped Steps in the Elevator Control System Rigging Procedure 99
2.3.4 Lack of an Effective Postmaintenance Check 101
2.4 Aft Center of Gravity and Its Effect on the Restricted Elevator Travel 103
2.4.1 Air Midwest's Weight and Balance Programs 104
2.5 Organizational and Management Factors 105
2.5.1 Air Midwest 105
2.5.1.1 Required Inspection Item Maintenance Tasks and Inspections 106
2.5.1.2 Maintenance Training Program 108
2.5.1.2.1 Maintenance Training Guidelines 108
2.5.1.2.2 Maintenance Training Oversight 109
2.5.1.3 Continuing Analysis and Surveillance System Program 111
2.5.1.4 Detail 6 Inspection Procedures Checklist 114
2.5.2 Federal Aviation Administration 116
2.5.2.1 Oversight of Air Midwest 116

2.5.2.2 Oversight of Continuing Analysis and Surveillance System Programs 118
2.5.2.3 Oversight of Maintenance Training Programs. 119
2.5.2.3.1 Programs to Reduce Human Error in Aircraft Maintenance. 120
2.5.2.4 Oversight of Weight and Balance Programs 120
2.5.2.4.1 Approval of Air Midwest's Weight and Balance Program 121
2.5.2.4.2 Use of Average Weights 123
2.5.2.4.3 Technological Advances 123
2.5.3 Raytheon Aircraft Company 124
2.6 Cockpit Voice Recorders Installed in Beech 1900 Series Airplanes 125

3. Conclusions 128
3.1 Findings 128
3.2 Probable Cause 131

4. Recommendations 132
4.1 New Recommendations 132
4.2 Previously Issued Recommendation Reiterated in This Report 135
4.3 Previously Issued Recommendation Resulting From This Accident Investigation 135
4.4 Previously Issued Recommendation Classified in This Report 135

5. Appendixes
A: Investigation and Hearing. 137
B: Cockpit Voice Recorder Transcript 138
C: Air Midwest's Elevator Control System Rigging Procedure at the Time of the Accident 192
D: Air Midwest's Revised Elevator Control System Rigging Procedure 200

Figures

1. Detail six work card at the time of the accident 5

2. Aircraft maintenance record of nonroutine items for January 6, 2003, at the Huntington, West Virginia, maintenance station. 7

3. Beech 1900D pitch control system 16

4. Side view of Beech 1900D tail section. 16

5. Turnbuckle assemblies. 18

6. Turnbuckles as found in the wreckage. 38

7. Weight and center of gravity information for flight 5481. 47

8. Flight data recorder pitch control and pitch trim control positions. 49

9. Elevator travel available before and after the detail six maintenance check. 51

10. Organizational structure of Air Midwest's Huntington, West Virginia, maintenance station operations 57

11. Flight 5481 weight and center of gravity information compared with flight 103 weight and center of gravity information. 80

Abbreviations

A&P	airframe and powerplant
AC	advisory circular
AD	airworthiness directive
AFFF	aqueous film forming foam
AFT1	forward (cargo compartment)
AFT2	aft (cargo compartment)
ALB	Albany International Airport
AMM	Airliner Maintenance Manual
AMT	aviation maintenance technician
AND	airplane nose down
ANU	airplane nose up
ARFF	aircraft rescue and firefighting
ASOS	automated surface observing system
ATC	air traffic control
ATCT	air traffic control tower
C	Celsius
CAA	Civil Aviation Authority
CASS	Continuing Analysis and Surveillance System
CFD	City of Charlotte Fire Department
CFR	*Code of Federal Regulations*
CG	center of gravity
CLT	Charlotte-Douglas International Airport
CVR	cockpit voice recorder
D6	detail six (maintenance check)
F	Fahrenheit
FAA	Federal Aviation Administration
FARs	*Federal Aviation Regulations*
FDR	flight data recorder
FSDO	Flight Standards District Office
GSP	Greenville-Spartanburg International Airport
Hg	mercury
HTS	Tri-State/Milton J. Ferguson Field, Huntington, West Virginia

JAA	Joint Aviation Authorities (European)
JARs	*Joint Aviation Regulations*
LYH	Lynchburg Regional Airport/Preston Glenn Field
METAR	meteorological aerodrome report
msl	mean sea level
OAT	outside air temperature
OJT	on-the-job training
PAI	principal avionics inspector
PIC	pilot-in-command
PMI	principal maintenance inspector
POI	principal operations inspector
RALLC	Raytheon Aerospace, LLC
RAMS	Regional Airline Maintenance Service
RASIP	Regional Aviation Safety Inspection Program
RDU	Raleigh-Durham International Airport
RII	required inspection item
SB	service bulletin
SMART	Structural Modification and Repair Technicians, Inc.
STAN	Sum Total Aft and Nose system
TRACON	terminal radar approach control
TTS	Tennessee Technical Services
UTC	coordinated universal time
VHF	very high frequency

Executive Summary

On January 8, 2003, about 0847:28 eastern standard time, Air Midwest (doing business as US Airways Express) flight 5481, a Raytheon (Beechcraft) 1900D, N233YV, crashed shortly after takeoff from runway 18R at Charlotte-Douglas International Airport, Charlotte, North Carolina. The 2 flight crewmembers and 19 passengers aboard the airplane were killed, 1 person on the ground received minor injuries, and the airplane was destroyed by impact forces and a postcrash fire. Flight 5481 was a regularly scheduled passenger flight to Greenville-Spartanburg International Airport, Greer, South Carolina, and was operating under the provisions of 14 *Code of Federal Regulations* Part 121 on an instrument flight rules flight plan. Visual meteorological conditions prevailed at the time of the accident.

The National Transportation Safety Board determines that the probable cause of this accident was the airplane's loss of pitch control during takeoff. The loss of pitch control resulted from the incorrect rigging of the elevator control system compounded by the airplane's aft center of gravity, which was substantially aft of the certified aft limit.

Contributing to the cause of the accident were (1) Air Midwest's lack of oversight of the work being performed at the Huntington, West Virginia, maintenance station; (2) Air Midwest's maintenance procedures and documentation; (3) Air Midwest's weight and balance program at the time of the accident; (4) the Raytheon Aerospace quality assurance inspector's failure to detect the incorrect rigging of the elevator control system; (5) the Federal Aviation Administration's (FAA) average weight assumptions in its weight and balance program guidance at the time of the accident; and (6) the FAA's lack of oversight of Air Midwest's maintenance program and its weight and balance program.

The safety issues in this report focus on maintenance work practices, oversight, and quality assurance; aircraft weight and balance programs; maintenance training; FAA oversight; and Beech 1900 cockpit voice recorder problems. Safety recommendations concerning these issues are addressed to the FAA.

1. Factual Information

1.1 History of Flight

On January 8, 2003, about 0847:28 eastern standard time,[1] Air Midwest (doing business as US Airways Express) flight 5481, a Raytheon (Beechcraft) 1900D,[2] N233YV, crashed shortly after takeoff from runway 18R at Charlotte-Douglas International Airport (CLT), Charlotte, North Carolina. The 2 flight crewmembers and 19 passengers aboard the airplane were killed, 1 person on the ground received minor injuries, and the airplane was destroyed by impact forces and a postcrash fire. Flight 5481 was a regularly scheduled passenger flight to Greenville-Spartanburg International Airport (GSP), Greer, South Carolina, and was operating under the provisions of 14 *Code of Federal Regulations* (CFR) Part 121 on an instrument flight rules flight plan. Visual meteorological conditions prevailed at the time of the accident.

The accident airplane had been flown from the Tri-State/Milton J. Ferguson Field, Huntington, West Virginia (HTS), to CLT on January 7, 2003 (the day before the accident). Air Midwest records indicated that the accident pilots flew the accident airplane on six flight legs that day. The first officer (the nonflying pilot) of the flight from HTS to CLT told the accident first officer, when handing off the airplane, that "everything was normal" and "it was a good flying airplane."

The accident pilots began their trip sequence about 1340 and ended their trip sequence at CLT about 2045. Another flight crew met the accident airplane for a trip that night from CLT to Lynchburg Regional Airport/Preston Glenn Field (LYH), Lynchburg, Virginia. That flight crew flew the accident airplane back to CLT the next morning (January 8th), arriving at 0715. According to postaccident interviews, neither the captain nor the first officer of those two flight legs noticed anything unusual about the airplane.

On January 8, 2003, the accident flight crew was scheduled to fly two flight legs on a 1-day trip sequence—CLT to GSP and GSP to Raleigh-Durham International Airport (RDU), Raleigh-Durham, North Carolina—and then to travel on duty as passengers from RDU to CLT. An Air Midwest pilot saw the captain in the gate area about 0745 and the first officer about 0800.

The dispatch release for flight 5481 showed that a maximum of 32 bags was allowed on the flight. One of the two ramp agents[3] working flight 5481 stated, in a postaccident interview, that 23 bags had been checked and that 8 bags were carried on the

[1] Unless otherwise indicated, all times in this report are eastern standard time based on a 24-hour clock.

[2] Raytheon Aircraft Company acquired Beech Aircraft Corporation in February 1980.

[3] The ramp agents working this flight were employees of Piedmont Airlines, which runs US Airways Express ground operations at CLT.

airplane. The ramp agent stated that two of the checked bags were heavy, with an estimated weight of between 70 and 80 pounds. The ramp agent also stated that he told the captain that some of the bags were heavy, although they were not marked as such. According to the ramp agent, the captain indicated that the bags were fine because a child would be on board, which would allow for the extra baggage weight.[4] The ramp agent estimated that the forward cargo compartment was about 98 percent full by volume.[5]

Cockpit voice recorder (CVR) information early in the recording indicated that the flight crew was completing the preflight paperwork regarding the airplane's weight and balance. Air Midwest records indicated that flight 5481 departed the gate on time about 0830. The captain was the flying pilot, and the first officer was the nonflying pilot.

Flight data recorder (FDR) data indicated that, beginning about 0835:16, the flight crew performed a control check of the elevators.[6] The pitch control position parameter, which measures the position of the control column, recorded values from 15° ANU to 16.5° AND.[7] These values corresponded to elevator positions from full ANU to 7° AND. About 0837:20, the CVR recorded the first officer contacting the CLT Air Traffic Control Tower (ATCT) ground controller and informing him that flight 5481 was ready to taxi. The ground controller instructed the flight crew to taxi to runway 18R.

About 0846:18, the tower (local) controller cleared flight 5481 for takeoff and instructed the flight crew to turn right to a heading of 230° after takeoff. About 0846:35, the captain asked the first officer to set the takeoff power, and the first officer stated that the power had been set.

About 0846:48, the airplane's airspeed was above 102 knots,[8] and the elevator position was 7° AND. About 3 seconds later, the elevator position was 1° AND, and the pitch attitude of the airplane began to increase. After 0846:53, the pitch trim started moving AND, and, about 3 seconds later, the captain called for the landing gear to be retracted. About 0846:57, the elevator position returned to 7° AND, and, about 2 seconds later, the CVR recorded the sound of the landing gear retracting.

---

[4] In calculating the weight and balance of the airplane, the flight crew used Air Midwest's standard adult weight figure (175 pounds) for this child, who was 12 years of age.

[5] A cargo net separates the forward (AFT1) cargo compartment from the aft (AFT2) cargo compartment. A ramp agent stated that the cargo net was in place before the accident flight.

[6] An elevator is an aerodynamic control surface hinged to the back of the horizontal stabilizer. An elevator moves up and down to control the airplane's wing angle of attack, pitch, and climb. Normal elevator travel for the Beech 1900D is from 20° to 21° airplane nose up (ANU) to 14° to 15° airplane nose down (AND), and the elevator neutral position is 0°. The elevator control check in the Beech 1900D involves moving the control column from the full forward position to the full aft position.

[7] In a properly rigged elevator control system, the FDR pitch control position parameter accurately reflects the elevator position. For the accident flight, however, the recorded pitch control positions did not reflect the actual elevator positions. The recorded pitch control positions were about 9° more AND than the actual elevator positions. For more information on this 9° AND shift, see sections 1.11.2.1, 1.16.1.2, and 1.16.2.3. In this section, all references to elevator positions reflect the actual elevator positions.

[8] According to Air Midwest's Beech 1900D Performance Manual, the rotation speed during takeoff is 105 knots.

About 0847:02, the first officer stated, "wuh," and the captain stated, "oh." About 0847:03, the captain stated, "help me." At that point, the airplane was about 90 feet above ground level, and FDR data showed that the airplane's pitch attitude was 20° ANU and airspeed was 139 knots. About 0847:04, the CVR recorded the captain asking, "you got it?" and FDR data indicated that the flight crew was forcefully commanding AND. During the next 8 seconds, the CVR recorded multiple statements and sounds from both flight crewmembers associated with their efforts to push the airplane's nose down. Also, about 0847:09, the CVR recorded a change in engine/propeller noise and, about 1 second later, the beginning of a sound similar to the stall warning horn.

About 0847:13, the FDR recorded a maximum pitch attitude of 54° ANU. About 0847:16, the captain radioed the ATCT and stated, "we have an emergency for Air [Midwest] fifty four eighty one," and the CVR recorded the end of the sound similar to the stall warning horn. About 0847:18, the airplane's pitch attitude decreased through 0°, and the elevator position began to move ANU. By 0847:19, the airplane was about 1,150 feet above ground level, and the FDR recorded a maximum left roll of 127° and a minimum airspeed of 31 knots. About 1 second later, the FDR recorded a pitch attitude of 42° AND.

About 0847:21, the captain stated, "pull the power back," the elevator position reached full ANU, and the airplane's pitch attitude was 39° AND. At 0847:21.7, the CVR recorded the beginning of a sound similar to the stall warning horn, which continued to the end of the recording. About 0847:22, the airplane's roll attitude stabilized at about 20° left wing down; the pitch attitude began to increase; and the elevator position moved in the AND direction, reaching about 8° ANU. About 1 second later, the elevator position began moving in the ANU direction. About 0847:24 the airplane rolled right through wings level, and the pitch attitude increased to about 5° AND.

About 0847:26, the FDR recorded a maximum right roll of 68° and a maximum vertical acceleration of 1.9 Gs.[9] About the same time, the captain stated, "oh my god ahh," and the first officer stated something similar to, "uh uh god ahh [expletive]." The CVR recording ended at 0847:28.1. The FDR's last recorded pitch attitude was 47° AND; roll attitude was 66° to the right; and pitch control position was 19.2° ANU, which corresponded to an elevator position of full ANU.

The airplane struck a US Airways maintenance hangar on CLT property and came to rest about 1,650 feet east of the runway 18R centerline and about 7,600 feet beyond the runway 18R threshold. ATCT controllers heard an emergency locator transmitter signal beginning about 0847:29.[10] The accident occurred at 35° 12' 25" north latitude and 80° 56' 46.85" west longitude during daylight hours.

[9] One G is equivalent to the acceleration caused by the earth's gravity (32.174 feet/second^2).

[10] See section 1.10.2 for information about the tower controllers' observations regarding the accident flight.

1.1.1 Maintenance Events Preceding the Accident Flight

Between the night of January 6 and the morning of January 7, 2003, the accident airplane underwent a detail six (D6) maintenance check[11] at Air Midwest's HTS maintenance station. Air Midwest contracted with Raytheon Aerospace, LLC (RALLC),[12] to provide mechanics, quality assurance inspectors, and a site manager for the HTS maintenance station. RALLC contracted with Structural Modification and Repair Technicians, Inc. (SMART), to supply the mechanic workforce.

The RALLC quality assurance inspector on duty the night of January 6th was providing on-the-job training (OJT) to two SMART mechanics on specific tasks associated with the D6 maintenance check. Neither mechanic had previously performed the complete D6 check.

One of the mechanics receiving OJT was assigned to inspect and check the elevator control cable tension. The D6 inspection procedures checklist (also known as the D6 work card), dated August 25, 2000, indicated that the cable tension was to be checked according to the procedures in chapter 27 of the Raytheon Aircraft Beech 1900D Airliner Maintenance Manual (AMM), as shown in figure 1. The first step on the D6 work card indicated that a temperature reading needed to be taken (to determine the tension values at which the control cables should be set) but did not specify how to take the temperature.[13] The work card showed that the mechanic recorded the temperature as 55° Fahrenheit (F).

[11] The D6 maintenance check comprises an elevator check, a rudder check, and a trim tab check.

[12] On June 20, 2003, RALLC changed its name to Vertex Aerospace, LLC. On December 1, 2003, L-3 Communications acquired Vertex Aerospace and named the new business unit L-3 Communications AeroTech, LLC.

[13] In a postaccident interview, the mechanic stated that he obtained a temperature reading from the outside air temperature (OAT) gauge located beneath the captain's side window, but the quality assurance inspector subsequently indicated that the temperature was actually read from an OAT gauge that was going to be installed on the accident airplane during the maintenance visit. The quality assurance inspector provided the Safety Board with the following written statement, dated February 25, 2003: "at the time the cable tensions were adjusted on A/C [aircraft] 233 [the accident airplane] the OAT gage [sic] reading was taken while it was laying on the top shelf of the podium. The podium was located at the nose of the A/C approximately 6 ft from the right avionics bay door."

Beechcraft 1900D Maintenance Program Manual DATE: 08/25/00 PAGE: A.149

SIXTH DETAILED INSPECTION PROCEDURES CHECKLIST COPY

#	ZONE	DESCRIPTION	STAMP	
		AFT FUSELAGE AND EMPENNAGE		
	SB2564	C/W BEECH SB 2564 AS REVISED (ACFT.UE1-UE113)	Mech N/A	Insp
1	280 281 311 312 330 340 320	SKIN - Inspect skin for condition and loose or missing rivets. If damage is found, check adjacent structure	Mech AM 714	Insp DI 701
2		STRUCTURE - Check for cracks, loose or missing rivets and concealed damage.	Mech AM 714	Insp DI 701
3	181 311 312	FLIGHT CONTROL COMPONENTS, CABLES AND PULLEYS - Inspect the control system components (pushrods, turnbuckles, end fittings, castings, etc for bulges, splits, bends or cracks.)	Mech AM 704	Insp DI 701
		Check control cables, pulleys and associated equipment for condition, attachment, alignment, clearance, and proper operation.	Mech AM 704	Insp DI 701
		Inspect cables for broken strands or evidence of corrosion per *BE Chapter 20-04-00.	Mech AM 704	Insp DI 701
		Check cable tension per *BE Chapter 27. Temperature 55 degrees F. 3/16" Elevator Cable Tension: UP 57 DOWN 62 1/16" Elevator Tab Cable Tension: 20. 3/16" Rudder Cable Tension: LT 75 RT 75. 1/16" Rudder Tab Cable Tension: 20.	Mech AM 704	Insp DI 701
4	311 312	PLUMBING - Inspect plumbing for condition and attachment.	Mech AM 704	Insp DI 701

62
57
119

Figure 1. Detail six work card at the time of the accident.

The next step on the D6 work card indicated that the ANU and AND elevator cable tensions needed to be measured. The mechanic stated that he used a cable tensiometer to check the tension in each cable and determined that the average tension was too low. The mechanic stated that he then referred to the Beech 1900D AMM, Section 27-30-02, "Elevator Control Rigging – Maintenance Practices" (dated February 22, 2002). The mechanic indicated that he used the elevator cable tension graph in section 27-30-02 to determine the proper cable tension.[14]

The mechanic stated that he worked under the supervision of the quality assurance inspector to adjust the cables to the proper tension range. According to the D6 work card, the mechanic adjusted the ANU cable tension to 57 pounds and the AND cable tension to 62 pounds.[15]

The aircraft maintenance record of nonroutine items for January 6, 2003, indicated, in a discrepancy block, that the airplane's elevator cable tension was low. A required inspection item (RII)[16] stamp appeared in this block, as shown at the bottom of figure 2. The form also indicated, in a nature of action block, that the elevator cable tension was adjusted per section 27-30-02 and that the operations check was normal. The mechanic's and quality assurance inspector's stamps appeared in their respective blocks on the form. In addition, the mechanic's OJT records indicated that he completed training on the entire D6 aft fuselage/empennage inspection procedure on January 7, 2003. The mechanic stated, during a postaccident interview, that he performed the elevator and rudder checks but not the trim tab check on the night of January 6th.

[14] The elevator cable tension graph showed temperature readings (in Fahrenheit) along one axis, pounds of tension along the other axis, and a reference line for optimum cable tension. The mechanic stated that he plotted 55° F on the graph and determined that the optimum cable tension would be an average of 61 pounds for the ANU and AND cables. The graph indicated that the tension tolerance was ±8 pounds. As a result, the mechanic could have adjusted the average cable tension to between 53 and 69 pounds.

[15] Section 27-30-02 indicated that the ANU and AND cable tensions were to be added and then divided by two so that the average tension of both cables was 66 ±8 pounds (with the elevators at neutral). According to the D6 work card, the average tension of the accident airplane's cables was 59.5 pounds.

[16] According to Air Midwest's Maintenance Procedures Manual (dated November 9, 1999), "Required Inspection Items are items of maintenance and/or alteration that must be inspected before [the aircraft's] return to service, including at least those items that could result in a failure, malfunction, or defect endangering the safe operation of the aircraft, if not performed properly." The rigging of elevator cables is identified in the manual as an RII. According to 14 CFR 121.371(c), "no person may perform a required inspection if [that person] performed the item of work required to be inspected."

FORM #M001 UsAirways/Express/ Air MidWest PAGE 3 of 5
DATE 01/06/03 AIRCRAFT MAINTENANCE RECORD ~~LIT~~ HTS W/O# 05-1030106016

AIRCRAFT #: UE233 N233YV MAKE/MODEL: BEECHCRAFT MOD. 1900D COPY

ACFT F.H.M: 2263.8 ACFT T.T: _____ ACFT CYCLES: _____

..... DISCREPANCY	..... NATURE OF ACTION .....
13 Rt eng igniters worn	R+R Igniters on Rt Eng IAW B1900 74-00-00 op ck normal
PT/SN> ② CH 34055 DATE: 1-6-03	MECH: AM 708 INSP: N/A
RII 14 LEFT FUSE FUEL FILTER REQ CHANGE	L/H FUEL FILTER CARTRIDGE REMOVED & REPLACED IAW BMM 28-20-10 LEAK & OP'S CK NORMAL
PT/SN> ① 03W1950281 ② MS29513-233 DATE: 01-05-03	MECH: AM 705 INSP: DI 701
15 Quill shaft sheared	REMOVED Quill SHAFT TRANSCRIBED TO ADL# 24163
PT/SN> ② NAS1593-135 DATE: 1-06-03	MECH: AM 714 INSP: N/A
RII 16 Elevator rig pin installed	REMOVED ELEVATOR Rig Pin IAW BMM 27-30-00 ops check normal
PT/SN> _____ DATE: 1-06-03	MECH: AM 714 INSP: DI 701
RII 17 Rudder rig pin installed	Removed Rudder Rig PIN IAW BMM 27-20-00 ops check normal
PT/SN> _____ DATE: 1/5/03	MECH: AM 704 INSP: DI 701
RII 18 elevator cable tension low	Adjusted elevator CABLE Tension per BMM 27-30-02 ops check Normal
④ MS21256-2 PT/SN> ~~③ MS21256-2~~ OF 4 TM DATE: 1/5/03	MECH: AM 704 INSP: DI 701

Figure 2. Aircraft maintenance record of nonroutine items for January 6, 2003, at the Huntington, West Virginia, maintenance station.

In addition, the mechanic stated that, while adjusting the cable tension, he bypassed several steps of the complete elevator control system rigging procedure (section 27-30-02).[17] The Beech 1900D AMM did not contain a stand-alone procedure for checking elevator cable tension, as called for on the D6 work card, or for adjusting elevator cable tension without rigging the entire elevator control system.[18] The quality assurance inspector stated, during a postaccident interview, that he and the mechanic discussed which steps to bypass and that he allowed the mechanic to adjust only the cable tension.

The accident airplane returned to service on the morning of January 7, 2003. The airplane flew a total of nine flight legs before the accident flight.

1.2 Injuries to Persons

Table 1. Injury chart.

Injuries	Flight Crew	Cabin Crew	Passengers	Other	Total
Fatal	2	0	19	0	21
Serious	0	0	0	0	0
Minor	0	0	0	1	1
None	0	0	0	0	0
Total	2	0	19	1	22

Note: The minor injury involved a US Airways mechanic who was treated for smoke inhalation.

1.3 Damage to Airplane

The airplane was destroyed by impact forces and a postcrash fire.

1.4 Other Damage

The airplane struck a US Airways maintenance hangar located on CLT property.

[17] Section 1.6.3.1 discusses this procedure, and section 1.6.3.2 discusses the applicable steps that the mechanic bypassed.

[18] After the accident, Raytheon Aircraft Company issued a revised elevator control system rigging procedure (see section 1.6.3.3), and Air Midwest issued a revised D6 work card (see section 1.17.1.4). As with the procedure and work card at the time of the accident, the revised procedure and revised work card do not contain a stand-alone procedure for checking elevator cable tension or for adjusting elevator cable tension without rigging the entire elevator control system.

1.5 Personnel Information

1.5.1 The Captain

The captain, age 25, was hired by Air Midwest in March 2000. She held an airline transport pilot certificate and a Federal Aviation Administration (FAA) first-class medical certificate dated November 19, 2002, with no limitations. The captain received a type rating on the Beech 1900D in March 2001.

The captain received her private pilot certificate in February 1997 while she was an aviation student at Louisiana Tech University, Ruston, Louisiana. From February 1999 to March 2000, the captain was a flight instructor and flight school supervisor at the university. The captain's résumé for employment with Air Midwest indicated that she had accumulated 925 hours total flying time (625 of which were as pilot-in-command [PIC] and 101 hours of which were in a multiengine airplane) in Beech 76 and Cessna 152, 172, and 310 airplanes.

Air Midwest records indicated that the captain had accumulated 1,865 hours total company flying time, including 1,100 hours as a Beech 1900D PIC. She had flown approximately 134, 32, and 6 hours in the 90 days, 30 days, and 24 hours, respectively, before the accident. The captain's last Beech 1900D proficiency check occurred on August 20, 2002; her last recurrent ground school occurred on September 18, 2002; and her last line check occurred on November 26, 2002. FAA records indicated no accident or incident history or enforcement action, and a search of the National Driver Register database found no record of driver's license suspension or revocation.

In postaccident interviews, Air Midwest pilots who had flown with the captain made favorable comments about her piloting skills. A check airman stated that the captain had no difficulties during upgrade training and that she demonstrated very good knowledge of the airplane's systems and very good judgment. Another check airman described the captain as one of the better company pilots and stated that she made very good decisions about flying. First officers stated that the captain was a thorough and methodical pilot who controlled the airplane well and involved them with the flight by asking for opinions and letting them review paperwork.

The captain was single and lived in the Charlotte area. She was reported to be in good health. She did not smoke and would occasionally have a glass of wine with dinner. Her personal situation was reported to be stable and her financial situation to be adequate during the months preceding the accident. She was described by her boyfriend as "healthy, happy, and not tired" on the morning of the accident.

Between 0810 and 1144 on January 5, 2003, the captain traveled on duty as a passenger from CLT to Key West, Florida, for a trip that originated there. From about 1230 to 2330, the captain flew six flight legs and accumulated about 6 hours of flight time. She arrived at her hotel about 0035 on January 6th and, from about 1130 to 1600, traveled on duty as a passenger from Key West to CLT.

On January 7, 2003, the captain was on reserve duty for the airline. She awoke between 0900 and 0930 and was notified by crew scheduling, about 1000, that she would be flying a six-leg trip sequence with the accident first officer. The first leg of the trip sequence was scheduled to depart about 1200 but did not depart until 1340. The last leg of the trip sequence was scheduled to arrive at CLT about 1910 but did not arrive until 2045. The captain accumulated 6 hours of flight time during the trip sequence. She went to bed that night about 2230 and awoke about 0625 on January 8th to get ready for that day's trip sequence.

1.5.2 The First Officer

The first officer, age 27, was hired by Air Midwest in May 2001. He held a commercial pilot license dated November 12, 2000, and an FAA first-class medical certificate dated December 10, 2002, with no limitations.

From August 1999 to February 2001, the first officer was enrolled at San Juan College, Farmington, New Mexico, as part of the Mesa Airlines[19] Pilot Development Program. On his application for employment with Air Midwest, the first officer reported that he had accumulated 390 hours total flying time in Beech 36, 58, and 1900; Aeronca Champion; and Citabria airplanes.

Air Midwest records indicated that the first officer had accumulated 706 hours total company flying time on Beech 1900D airplanes. He had flown approximately 210, 59, and 6 hours in the 90 days, 30 days, and 24 hours, respectively, before the accident. The first officer's last line check occurred on August 20, 2001, and his initial Beech 1900D proficiency check occurred on May 4, 2002. FAA records indicated no accident or incident history or enforcement action, and a search of the National Driver Register database found no record of driver's license suspension or revocation.

In postaccident interviews, Air Midwest pilots who had flown with the first officer made favorable comments about his piloting skills. Pilots described the first officer as a talented and very precise pilot with good attention to detail and good communication skills. Pilots also stated that the first officer possessed good situational awareness and good knowledge of the Beech 1900D.

The first officer was single and lived in the Charlotte area. He was reported to be in excellent health. He did not smoke and consumed alcohol occasionally in social settings. His personal and financial situations during the months preceding the accident were reported to be stable.

On January 5, 2003, the first officer was off duty until 2035, when he departed CLT for a flight to LYH, which arrived about 2130. About 0620 on January 6th, the first officer flew back to CLT, arriving about 0715. On January 7th, the first officer flew the

[19] Mesa Airlines is one of four airline liveries operated by Mesa Air Group, Inc., which is the parent company of Air Midwest. See section 1.17.1 for more information.

same trip sequence as the accident captain. The times that the first officer went to sleep on the night of January 7th and awoke on January 8th are not known.

1.5.3 The Maintenance Personnel

Sections 1.5.3.1 through 1.5.3.3 provide information about the three HTS maintenance personnel who were involved with the maintenance of the accident airplane's elevator control system. Sections 1.5.3.4 and 1.5.3.5 provide information about the HTS maintenance managers. For additional information about the maintenance personnel and the maintenance managers, see sections 1.17.1 through 1.17.3.

1.5.3.1 The Quality Assurance Inspector

The quality assurance inspector, age 50, was hired by RALLC in July 2002. He was initially hired as a mechanic at the HTS maintenance station and was subsequently promoted to foreman and secondary (backup) quality assurance inspector.[20] He received his airframe and powerplant (A&P) certificate in January 1985.

On his application for employment with RALLC, the quality assurance inspector reported that he had between 3 and 4 years of aviation maintenance experience with light general aviation airplanes. From about 1988 to July 1999, the quality assurance inspector was not employed in the aviation maintenance field. Between July 1999 and October 2001, the quality assurance inspector worked on Beech 1900D airplanes at the maintenance station at Dubois Jefferson County Airport, Dubois, Pennsylvania. (He was employed at the Dubois maintenance station by Mesa Airlines between July and December 1999, Arctic Slope[21] between December 1999 and September 2001, and RALLC between September and October 2001.) Between October 2001 and July 2002, the quality assurance inspector was not employed in the aviation maintenance field.

According to RALLC time cards, the quality assurance inspector worked shifts from 1700 on January 4 to 1200 on January 5, 2003, and from 2100 on January 5th to 0630 on January 6th. He began work on the night of January 6th at 2100. The quality assurance inspector stated that he was providing OJT to two mechanics and that it was his first time training two mechanics while performing inspector duties. In addition, the quality assurance inspector performed an engine borescope inspection that took about 30 minutes to accomplish. His shift ended at 1230 on January 7th.

The quality assurance inspector described his health as good and stated that he slept when his shift ended and that he awoke in the afternoon. The quality assurance inspector reported no significant life events in the months preceding the accident and stated that nothing affected his performance on the night of January 6th. In a postaccident interview, the Air Midwest HTS regional site manager (see section 1.5.3.5) stated that he

[20] The primary quality assurance inspector was not at work on the night of January 6, 2003, so the foreman/secondary quality assurance inspector assumed his duties.

[21] Arctic Slope was a maintenance contractor.

had "a lot of faith" in the quality assurance inspector. At the public hearing for this accident,[22] the quality assurance inspector testified that he had performed elevator control system rigging work once.

1.5.3.2 The Foreman

The foreman, age 36, was employed by SMART and had begun working at the HTS maintenance station in July 2002. He received his A&P certificate in July 1995.

From 1984 to 1987, the foreman worked as a mechanic on B-52 and KC-135 airplanes with the U.S. Air Force. He gained experience as a foreman while working with the Air Force. Between 1993 and 1999, the foreman worked as a mechanic on general aviation and commuter airplanes. From December 2001 to July 2002, the foreman was employed by SMART and was assigned to RALLC at the Dubois maintenance station as a mechanic working on Beech 1900D airplanes.

The foreman stated that he typically arrived at work between 2100 and 2130, about 30 minutes before the arrival of the airplane that was scheduled for maintenance. He then reviewed the work scheduled for the shift, organized the paperwork, and reviewed the personnel and equipment requirements. He assigned mechanics to the required tasks but did not do any of the maintenance himself. He indicated that work assignments were based on what work had to be done and which mechanic was best suited for a particular job. The foreman tried to keep the same mechanics on the same jobs throughout the shift. The foreman normally communicated with Air Midwest maintenance control about 0400 regarding the status of the airplane undergoing maintenance.

During a postaccident interview, the foreman stated that, if a mechanic had not done a job before and someone was available who had previously done the job, he would assign the experienced mechanic to the job and would train the mechanic without experience as time permitted. The foreman indicated that he tried to train only one mechanic at a time but that, sometimes, more than one mechanic needed to be trained at the same time.

According to SMART time cards, the foreman was off duty for the shift from January 4 to 5, 2003, but worked an 8-hour shift from January 5th to 6th. For the shift from January 6th to 7th, the foreman worked 15 hours. On the night of January 6th, he assigned the work tasks for the accident airplane's D6 maintenance check. The foreman was aware that, besides he and the quality assurance inspector, none of the mechanics on duty that night had done an elevator control system rigging check on a Beech 1900D.

1.5.3.3 The Mechanic

The mechanic, age 30, was employed by SMART and began working at the HTS maintenance station in November 2002. He attended the Pittsburgh Institute of Aeronautics, Pittsburgh, Pennsylvania, from 1991 to 1993 and received his A&P certificate in March 1993.

[22] Appendix A provides details about the public hearing.

Between 1994 and 1999, the mechanic was not employed in the aviation maintenance field. From January to October 2000, the mechanic performed line maintenance for Piedmont Airlines, Philadelphia, Pennsylvania, on De Havilland Canada DHC-8 airplanes. From October 2000 to January 2002, the mechanic performed heavy maintenance for US Airways, Pittsburgh, Pennsylvania, on Boeing 737 and Fokker F.100 airplanes. In October and November 2002, he worked at Stambaugh Air Service, Harrisburg, Pennsylvania. The mechanic had no previous experience working on Beech 1900D airplanes before beginning work at the HTS maintenance station.

According to SMART time cards, the mechanic worked 17.5 hours from January 4 to 5, 2003, and 8 hours from January 5th to 6th. For the shift from January 6th to 7th, the mechanic worked 14 hours, during which he performed the D6 maintenance check for the first time. The mechanic stated that he did not have any previous OJT for that inspection but that he had previous flight control rigging experience at Piedmont and US Airways. The mechanic thought that he was "properly trained" for the rigging task because he did not perceive any differences, in terms of rigging flight controls, between the Beech 1900D and previous airplanes on which he had worked. He estimated that it took about 7 hours to complete his assigned tasks for the D6 maintenance check and stated that he received proper oversight.

In a postaccident interview, the RALLC site manager (see section 1.5.3.4) described the mechanic as capable. The site manager also stated that he had received positive reports about the mechanic from inspectors and foremen at the HTS maintenance station.

1.5.3.4 The Raytheon Aerospace Site Manager

The RALLC site manager[23] for the HTS maintenance station, age 50, began working for RALLC in July 2002. He received his A&P certificate in April 1979.

Between June 2001 and July 2002, the RALLC site manager was employed by SMART as a mechanic assigned to the RALLC maintenance station in Panama City, Florida, where he worked on Beech 1900D airplanes. He became the foreman and was responsible for two crews. The RALLC site manager indicated that he had previous aviation manufacturing and maintenance experience with large commercial airplanes (the Boeing 727, Airbus A300, Lockheed L-1011, and Douglas DC-8 and DC-9), large military airplanes (the C-5B, C-130, and P-3), and general aviation airplanes (including the Learjet 25 and 35).

The RALLC site manager worked from 0800 to 1700 Monday through Friday. During his shift, the RALLC site manager would typically review the paperwork from the previous night to identify what work was done and to check that the work had been properly documented, examine the status and condition of the hangar and its equipment, review attendance sheets and time cards, and coordinate with the parts manager to ensure that parts were available to meet maintenance needs. The RALLC site manager would also interact with other personnel at the HTS maintenance station who worked a day shift,

[23] Air Midwest refers to this position as "maintenance manager."

including the Air Midwest regional site manager. In addition, the RALLC site manager would participate in daily maintenance conference calls that addressed, among other things, upcoming maintenance needs. (RALLC site managers from the four other Air Midwest maintenance stations[24] and Air Midwest maintenance personnel also participated in the daily conference calls.) The RALLC site manager stated that he occasionally visited the hangar at night.

1.5.3.5 The Air Midwest Regional Site Manager

The Air Midwest regional site manager, age 44, has been employed by Air Midwest for 22 years and has been the regional site manager at the HTS maintenance station since August 2002. He received his A&P certificate in February 1995.

Before his HTS assignment, the Air Midwest regional site manager worked for 8 years as a quality assurance inspector at the company's Wichita, Kansas, maintenance station.[25] He has performed aviation maintenance on various turboprop commuter airplanes.

At the time of the accident, the Air Midwest regional site manager normally worked from 0830 to 1700 Monday through Friday. During his shift, he would typically review the previous night's paperwork to determine if it had been properly signed off and, if he noted any discrepancies, would either speak with the RALLC site manager or write up a noncompliance form. He also participated in the daily maintenance conference calls and daily conference calls with Air Midwest flight operations personnel. The regional site manager stated that he occasionally visited the hangar at night.

1.6 Airplane Information

Beech 1900 series airplanes entered service in 1984 and have accumulated more than 11 million flight hours since then. The Beech 1900D is a low-wing, twin-engine, propeller-driven, pressurized airplane. It has an overall length of 57 feet 10 inches, a height of 14 feet 11 inches, and a wingspan of 57 feet 11 inches.

The accident airplane, serial number UE-233, was delivered new to Air Midwest from Raytheon Aircraft Company on August 30, 1996. The airplane was registered as N233YV on November 20, 1996. At the time of the accident, the airplane had 15,003 total flight hours and 21,332 total cycles.[26]

The accident airplane was configured with a captain's seat, a first officer's seat, 16 single passenger seats, and a triple passenger seat in the rear of the airplane (for a total of 19 passenger seats in 9 rows). The airplane had a main entry door on the left forward

[24] These maintenance stations are located in Dubois, Pennsylvania; Farmington, New Mexico; Little Rock, Arkansas; and Panama City, Florida.

[25] Air Midwest closed its Wichita maintenance station on September 30, 2002, because of flight schedule changes.

[26] An airplane cycle is one complete takeoff and landing sequence.

side of the fuselage and three emergency exits, two of which were on the right side of the cabin (at rows 4 and 6) and one of which was on the left side of the cabin (at row 6). The airplane also had a cargo door on the left aft side of the fuselage. The cargo storage area began at the partition immediately aft of the triple passenger seat and extended almost to the aft pressure bulkhead. According to Raytheon Aircraft Company, the airplane's interior was installed in 1996 and was certified to meet Federal material flammability requirements.

The accident airplane was equipped with two Pratt & Whitney Canada PT6A-67D turbopropeller engines and Hartzell model HC-E4A-3I four-bladed, constant-speed, full-feathering, reversible propellers. The PT6A-67D turbopropeller engine has a gas generator module and a power turbine module. The HC-E4A-3I propeller is hydraulically actuated and has model E10950 composite blades.

The left engine gas generator module, serial number 114328, was installed on the accident airplane on November 2, 2001. At the time of the accident, the module had accumulated 14,659 hours and 21,142 cycles since new and 2,445 hours and 3,319 cycles since overhaul. The left engine power turbine module, serial number 114301, was installed on the accident airplane on October 25, 2000. At the time of the accident, the module had accumulated 14,557 hours and 21,514 cycles since new and 4,778 hours and 6,349 cycles since overhaul.

The right engine gas generator module, serial number 114091, was installed on the accident airplane on May 28, 2002. At the time of the accident, the module had accumulated 18,447 hours and 25,612 cycles since new and 1,225 hours and 1,640 cycles since overhaul. The right engine power turbine module, serial number 114343, was installed on the accident airplane on May 24, 2002. At the time of the accident, the module had accumulated 13,548 hours and 22,093 cycles since new and 1,225 hours and 1,640 cycles since overhaul.

The accident airplane was not equipped with an autopilot.

1.6.1 Pitch Control System

The Beech 1900D airplane is equipped with a mechanically operated pitch control system.[27] The three primary elements of the pitch control system are the elevators, the control column, and the connecting rods and cables. The elevators (left and right) are attached to the trailing edge of the horizontal stabilizer, which is mounted on top of the vertical stabilizer in a T-tail configuration. A pilot pushes forward on the control column to move the elevator trailing edges down (resulting in the airplane pitching AND) and pulls back on the control column to move the elevator trailing edges up (resulting in the airplane pitching ANU). Figure 3 shows the elements of the pitch control system, and figure 4 shows a side view of the airplane's tail section.

[27] The terms "pitch control system" and "elevator control system" are used synonymously in this report.

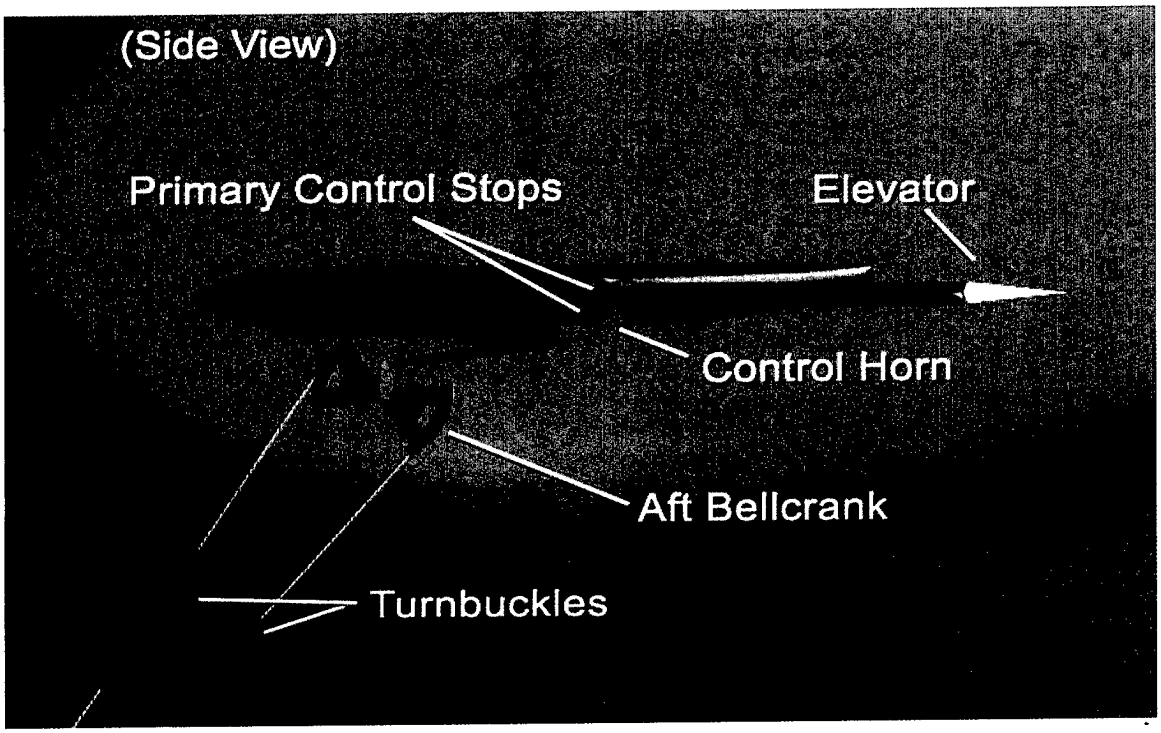

Figure 3. Beech 1900D pitch control system.

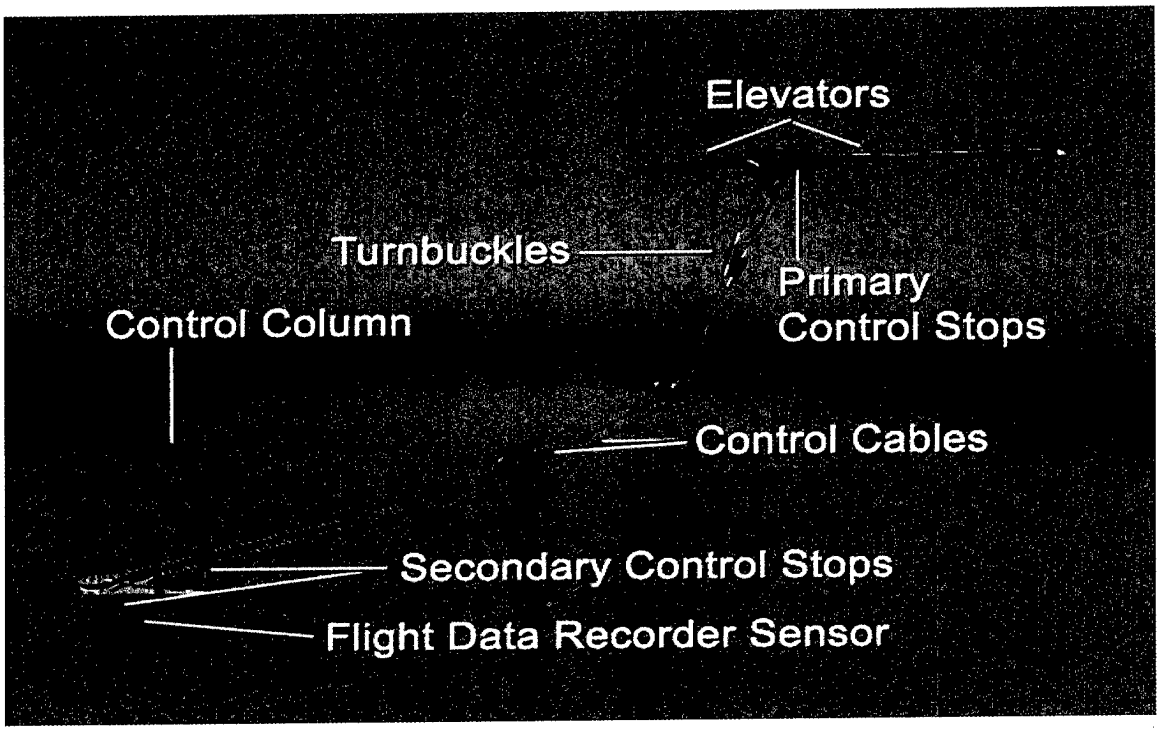

Figure 4. Side view of Beech 1900D tail section.

The inboard end of each elevator has a control horn that is connected to the elevator surface by a shaft. Four primary stop bolts (left upper, left lower, right upper, and right lower) are mounted on airplane structure. The limit of travel for each of the elevator control horns is contact with an up stop bolt or a down stop bolt. The Beech 1900D AMM, section 27-30-02, indicates that the elevator primary stop deflection settings are 20° +1°/-0° up from the neutral position and 14° +1°/-0° down from the neutral position. The elevator's neutral position is the point at which the position of the trailing edge of the elevator is aligned with the chord plane of the horizontal stabilizer.

The left and right elevator control horns are connected by independent aft pushrods to the aft bellcrank, which is located near the junction of the horizontal and vertical stabilizers. Left and right tension springs connect the aft bellcrank arm to airplane structure and orient the pitch control system toward the AND direction. Attachment links connect the springs to the aft bellcrank arm. Structure adjacent to the aft bellcrank contains holes for a rig pin.[28]

Control cable assemblies (one ANU and one AND) connect the aft bellcrank to the forward bellcrank. The control cable assemblies have two cable sections joined by turnbuckle assemblies located in the base of the vertical stabilizer. Each control cable assembly comprises seven spirally wound strands and has one long and one short component. The turnbuckle assemblies establish the correct tension in the cables. Each turnbuckle assembly consists of a barrel and two threaded cable terminals. Figure 5 shows the ANU and AND turnbuckle assemblies.

Each turnbuckle assembly can be lengthened or shortened during elevator rigging. Depending on the direction of the turnbuckle barrel's rotation, both threaded cable terminals extend from or contract into the barrel at the same time. A tooling hole in the barrel is used by mechanics to rotate the barrel, and tooling holes in the terminals are used to hold the terminals in place while the turnbuckle barrel rotates. According to FAA Advisory Circular (AC) 43.13-1B, "Acceptable Methods, Techniques, and Practices – Aircraft Inspection and Repair" (dated September 27, 2001), up to three threads of a terminal can be visible on a turnbuckle assembly when maintenance is complete. A safety clip holds the terminals in place in the barrel after maintenance to ensure that the length of the turnbuckle assembly does not change.

[28] A rig pin is a maintenance tool that is inserted into a flight control system to immobilize movable components at a specific position. A rig pin must be removed before maintenance is complete. For a rig pin to properly penetrate the aft bellcrank rig pin holes, the bellcrank must be moved to align with the holes in the structure on both sides of the bellcrank. The rig pin must enter the bellcrank through a hole on one side of the vertical stabilizer, pass through the bellcrank, and then pass through structure on the other side of the vertical stabilizer. When the aft bellcrank rig pin is in place, the elevators can be set to 0° by adjusting the aft pushrods.

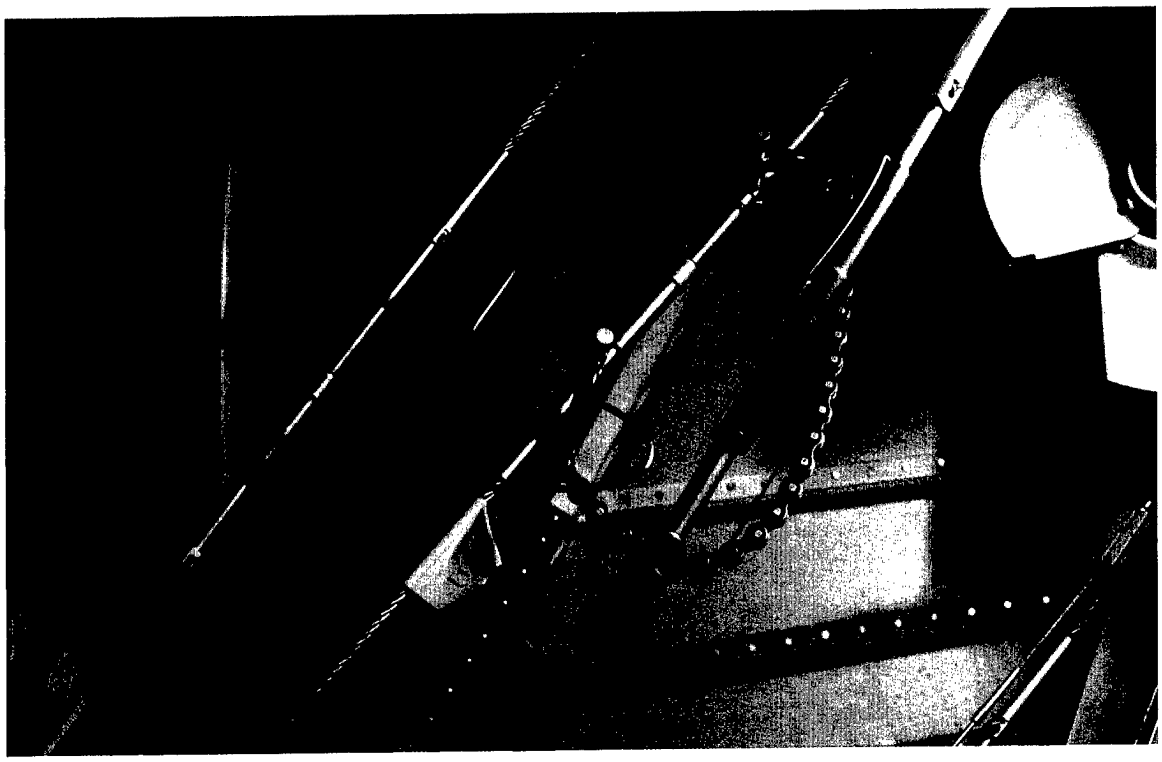

Figure 5. Turnbuckle assemblies.

The control cable assemblies are routed through pulleys from the aft bellcrank, through the rear pressure bulkhead, beneath the rear cargo compartment and cabin floor, and to the forward bellcrank beneath the cockpit pedestal and the floor under the first officer's seat. The forward bellcrank contains two secondary stop bolts (one up and one down), which have AMM-specified deflection settings that allow slightly more travel than the primary stop bolts at the elevator control horns. Structure above and below the forward bellcrank contains holes for a rig pin.[29] A forward push-pull tube, located beneath the cockpit pedestal, connects the forward bellcrank with the bottom of a T-shaped control column assembly.

Two control wheels—one for the captain and one for the first officer—are located in front of each cockpit seat. The control wheels (also known as control yokes) are connected to the top of the T-shaped control column assembly by a shaft and a flexible coupling. Each shaft passes through a control column support assembly, with a roller slider assembly mounted inside, providing support to each shaft where it enters the instrument panel. Each roller slider assembly consists of three rollers, one of which has an eccentric screw that is adjusted to set roller clearance. The captain's control column support and shaft assembly contains a hole for a gust lock pin, which is used only when the airplane is parked and shut down. The gust lock pin immobilizes pitch and roll controls to prevent wind damage to the control surfaces and control systems.

[29] For this rig pin to be properly positioned, the forward bellcrank rig pin hole must align with two adjacent rig pin holes in the airplane structure. When the forward bellcrank rig pin is in place, the elevator should be near 0°.

The control column pivots forward and aft on bearings near the cockpit floor. A bob weight, attached through an interconnect link to the control column, provides control column feel and flight control stability. The bob weight installation has a tertiary down stop bolt.

The FDR pitch control position sensor is located beneath the cockpit floor. The sensor is attached to structure located to the left of the base of the control column (looking forward). One rubber-cushioned, steel-band clamp (called an Adel clamp) holds the sensor to the structure. The sensor is connected to the elevator system by a short rod that extends from the sensor to a bracket attached to the lower part of the control column.

1.6.1.1 Pitch Trim Control System

The accident airplane was equipped with a mechanically operated pitch trim control system. The pitch trim control system includes a single movable trim tab[30] for each elevator and a cable-driven jackscrew actuator for each tab. The trim tabs, which are located on the inboard trailing edge of each elevator, relieve the force a pilot must hold on the control wheel to provide longitudinal control (for example, angle of attack or pitch) of the airplane. According to the Beech 1900D AMM, the trim tabs move from 5.75° ±0.25° up to 17° ±0.5° down. Movement of the trim tabs in the downward direction creates an upward aerodynamic moment on the elevator and results in an ANU pitching moment.

1.6.2 Maintenance Program

The Air Midwest Maintenance Program Manual describes the company's Continuous Airworthiness Maintenance Program. This program incorporates guidance from the Beech 1900D AMM. The program includes the following inspections:

- Periodic service check. This check is accomplished during an airplane's layover when applicable. The check involves a visual inspection of safety-of-flight items and servicing when necessary.
- Routine check. This check is performed every 100 flight hours. The check includes a visual inspection and servicing of the airplane's major components.
- Detail check. This check is divided into six different phases, known as detail one through detail six, and a different phase is performed every 200 hours along with a routine check. One major airplane section is inspected during each phase. Detail one covers the wings, detail two covers the powerplants, detail three covers the flight compartment and cabin, detail four covers the environmental systems and nose, detail five covers the landing gear, and detail six covers the aft fuselage and empennage. Details one through six comprise one full cycle, and an airplane must complete one full cycle each year.
- Structural check. This check is accomplished when the airplane has accumulated 12,000 flight hours and then every 3,000 flight hours afterward.

[30] The trim tabs on the Beech 1900D are geared tabs, which move in relation to the position of the elevator.

The accident airplane's last periodic service check and routine check occurred on January 6, 2003. The airplane's last detail checks occurred as follows: detail one, July 31, 2002; detail two, September 16, 2002; detail three, October 11, 2002; detail four, November 7, 2002; detail five, December 5, 2002; and detail six, January 6, 2003. The airplane's last structural check occurred on August 27, 2002.

The maintenance paperwork for the accident airplane from January 2001 to January 2003 was reviewed for discrepancies related to elevator or pitch control. No trends or discrepancies were noted before the accident flight. FAA Service Difficulty Reports were reviewed for flight control maintenance discrepancies involving the accident airplane. No trends or discrepancies were noted before the accident flight. In addition, Air Midwest records indicated no previous accidents involving the airplane.

1.6.3 Elevator Control System Rigging Procedure

As stated in section 1.1.1, the mechanic who performed the cable tension check bypassed several steps of the elevator control system rigging procedure in section 27-30-02 of the Beech 1900D AMM (with the quality assurance inspector's concurrence). The procedure at the time of the accident is detailed in section 1.6.3.1, and the applicable steps that the mechanic skipped are discussed in section 1.6.3.2. After the accident, Raytheon Aircraft Company revised its elevator control system rigging procedure, and the revised procedure is presented in section 1.6.3.3.

1.6.3.1 Rigging Procedure at the Time of the Accident

The Raytheon Aircraft elevator control system rigging procedure that was in effect at the time of the accident is summarized below and presented in its entirety in appendix C.

ELEVATOR CONTROL SYSTEM RIGGING

a. Disconnect the autopilot servo cables.

b. Locate and remove all access panels from the vertical and horizontal stabilizers to gain access to the aft elevator bellcrank and the elevator cables.

c. Locate and remove the flight compartment seats, carpet, and floorboards to gain access to the forward elevator bellcrank.

d. Locate and remove the passenger seats, carpet, and floorboards on the right side of the passenger compartment to gain access to the elevator cable turnbuckles.

e. Install an elevator travel board[31] on each elevator at station 50.00.

[31] An elevator travel board is a template that is unique to a specific airplane design. The travel board attaches to the horizontal stabilizer to provide a reference for measuring movement of the elevators. The position of the elevator trailing edge aligns with 1° markings on the travel board that show the angular position of the elevator in degrees.

f. Adjust the center-to-center length of the push-pull tube assembly between the control column and the forward elevator bellcrank to a dimension of 15.12 ± 0.06 inch.

g. Adjust the surface stop bolts on the elevator control horn support for up-travel of 20° + 1° - 0 and down-travel of 14° + 1° - 0°.

h. Verify the bob weight stop bolt clearance is 0.5 ± 0.06 inch. Adjust if necessary.

i. Adjust the forward bellcrank stops for 0.37 ± 0.06 inch clearance from the stop bolts.

j. Verify the forward bellcrank stop bolts make contact before the bob weight stop bolts make contact with the weight.

k. Install a rig pin in the aft elevator bellcrank.

NOTE

Verify threads are visible through the inspection holes at the end of the pushrods after adjustments are made.

l. Adjust the pushrods between the aft elevator bellcrank and the elevator to position the elevator at neutral (0° deflection).

m. Remove the rig pin from the aft elevator bellcrank.

n. Remove the safety clips from the turnbuckles and release cable tension.

o. Move the control yoke to install the rig pin in the forward elevator bellcrank.

p. Tighten the elevator-up cable until the elevator rises to neutral (0° on the travel board).

q. Tighten the elevator-down cable until the average tension of the up- and down-cables is 66 ± 8 pounds (the sum of up-cable and down-cable tensions, divided by two). Refer to Figure 203.[32]

r. Continue to balance the adjustment of the two cables until the average tension is 66 ± 8 pounds while maintaining 0° deflection of the elevator.

s. Perform the CONTROL COLUMN SUPPORT ROLLER INSPECTION procedure.

t. Install safety clips on the turnbuckles.

[32] Figure 203 was an elevator cable tension graph included in section 27-30-02 of the Beech 1900D AMM. The graph did not contain instructions on how to take a temperature reading.

u. On aircraft equipped with the F1000 Flight Data Recorder, calibrate the Pitch Position Potentiometer. Perform the FLIGHT DATA RECORDER (FDR) – PITCH ADJUSTMENT procedure.[33]

v. Remove the travel boards from the horizontal stabilizers.

w. Connect the autopilot servo cables to the elevator primary control cables.

x. Install the seats, carpet and floorboards.

y. Replace all access panels.

Step a, to disconnect the autopilot servo cables, and step w, to connect the autopilot servo cables to the elevator primary control cables, were not applicable to the accident airplane because it did not have an autopilot. Step d, to locate and remove the passenger seats, carpet, and floorboards on the right side of the passenger compartment to gain access to the turnbuckles, was not applicable because the elevator cable turnbuckles for the Beech 1900D model are not located under the passenger compartment floorboards.[34]

1.6.3.2 Applicable Steps That Were Skipped During Maintenance

The mechanic indicated that he bypassed step c, to locate and remove the flight compartment seats, carpet, and floorboards to gain access to the forward elevator bellcrank, because the quality assurance inspector told him that the flight compartment seats and floorboards did not need to be removed to comply with the rigging procedure. In fact, the mechanic stated that access to the rig pin hole was adequate without removing the seats and the floorboards because the foreman showed the mechanic a small access panel that needed to be opened to access the forward bellcrank rig pin hole.[35] The mechanic also stated that he bypassed step f, to adjust the center-to-center length of the forward push-pull tube to a dimension of 15.12 inches ±0.06 inch, with the quality assurance inspector's concurrence.

The mechanic indicated that he bypassed step g, to adjust the stop bolts on the elevator control horn supports for a deflection setting of 20° +1°/-0° up and 14° +1°/-0° down, because he did not think that cable tensioning required a measurement of the deflection settings. The mechanic stated that he had manually pushed the elevators up and down before rigging to determine if the elevator control horns were hitting the stops.

The mechanic stated that he decided, and the quality assurance inspector concurred, that the following steps were not required: step h, to verify the bob weight stop bolt clearance and adjust if necessary; step i, to adjust the forward bellcrank stops for

---

[33] The pitch adjustment procedure involves setting the elevator to eight different data points, ranging from 14° AND to 20° ANU (including 0°), and recording the FDR readout.

[34] The turnbuckles for the Beech 1900C model are located under the passenger compartment floorboards.

[35] During ground tests (see section 1.16.1), Safety Board investigators noted that it was easier to view the inserted rig pin when the floorboard in front of the first officer's seat was removed, as directed in part by step c of the rigging procedure, rather than when just the small access panel was opened.

clearance from the stop bolts; and step j, to verify that the forward bellcrank stop bolts make contact before the bob weight stop bolt makes contact with the weight. The mechanic stated that he bypassed part of step n, to release cable tension, because he could adjust cable tension by tightening the cables without releasing them before the adjustment.

The mechanic stated that he bypassed step s, to perform the control column support roller inspection procedure, because he decided that it was not required. The quality assurance inspector concurred. The mechanic also stated that he bypassed step u, to calibrate the F1000 FDR pitch position potentiometer and to perform the FDR pitch adjustment procedure, because he did not think that the calibration needed to be done. The quality assurance inspector stated that he did not think that an FDR was installed on the airplane.[36]

During a postaccident interview, the mechanic and quality assurance inspector further stated that steps c, f, g, h, i, j, n, and s were not required because those steps were only necessary for cable replacement and not for cable tensioning. The Air Midwest regional site manager stated, during a postaccident interview, that all of these steps should have been followed, except for step n (releasing the cable tension before a readjustment of the cables). The regional site manager thought that loosening the cables would not have affected the final outcome of a proper rig.

In addition, the mechanic stated that he bypassed the Elevator Control System Friction Test described in section 27-30-02 of the Beech 1900D AMM because he decided that the test was not required. The quality assurance inspector concurred.

1.6.3.3 Revised Rigging Procedure

On February 12, 2003, Raytheon Aircraft revised its elevator control system rigging procedure for the Beech 1900D airplane. The revised procedure is summarized below and presented in its entirety in appendix D.

[36] Most, if not all, Beech 1900D airplanes are outfitted with an FDR. The wiring and the sensor for the FDR are in the same area of the airplane where maintenance was being performed. Also, the FDR unit is mounted in the AFT1 cargo compartment and is readily visible. In addition, a circuit breaker for the FDR is located in the cockpit.

ELEVATOR CONTROL SYSTEM RIGGING

WARNING

THE GUST LOCK PIN MUST NOT BE USED FOR RIGGING THE ELEVATOR CONTROL SYSTEM EXCEPT WHEN PERFORMING THE GUST LOCK PIN CHECK PORTION OF THIS PROCEDURE.

NOTE

DISCONNECT THE AUTOPILOT SERVO CABLES TO THE ELEVATOR PRIMARY CONTROL CABLES.

a. Locate and remove all access panels from the vertical and horizontal stabilizers to gain access to the aft elevator bellcrank and the elevator cables.

b. Install a rig pin in the aft elevator bellcrank.

c. Remove lock clips from turnbuckles. Release cable tension.

d. Locate and remove the copilot's seat, carpet, and floorboards to gain access to the forward elevator bellcrank.

e. Adjust the center-to-center length of the push-pull tube assembly between the control column and the forward elevator bellcrank to a dimension of 15.17 +0.19/-0.06 inch. This push-pull tube is to be adjusted if needed to meet the bob weight stop clearance requirement or to meet the gust lock pin check.

f. Install the rig pin in the forward elevator bellcrank (located below the floorboard forward of the copilot's seat tracks). Move the control column as required to align the rig pin holes.

NOTE

CHECK ELEVATOR TRAVEL WITH TRAVEL BOARDS. ONE TRAVEL BOARD SHOULD BE MOUNTED ON EACH HORIZONTAL STABILIZER AT HSS [horizontal stabilizer station] 50.00.

g. Disconnect the elevator pushrods from the aft bellcrank.

h. Adjust the surface stops on the control horn support for up travel of 20° +1°/ -0°; and down travel of 14° +1° / -0°.

NOTE

INSURE THAT THREADS ARE VISIBLE THROUGH THE INSPECTION HOLE AT THE END OF THE PUSHROD, AFTER ADJUSTMENTS ARE MADE.

i. Adjust the elevator bellcrank pushrod ends as required to obtain 0 readings on the travel boards for both elevators. Tighten the locknuts.

j. Connect pushrods to the aft elevator bellcrank.

k. Use a cable tensiometer to measure control cable tension.

l. Tighten elevator control cables uniformly to the center of the maximum and minimum tensions.

m. Slowly adjust the elevator cable(s) as required until the rig pin in the forward bellcrank will fit with minimum insertion force.

n. Remove the rig pin from the forward bellcrank.

o. Read the cable tension of both cables. Record the values as T up and T down. The allowable limit for combined cable tension is 66 ± 8.0 lbs. Compute the combined tension load (Tc) by adding the up and down values together and dividing by 2, or:

$$Tc = (T\ up + T\ down) / 2$$

Example:

T up = 57 lbs., T down = 75 lbs.

$$Tc = (T\ up + T\ down) / 2$$

$$Tc = \frac{57 + 75}{2} = \frac{132}{2} = 66 \text{ lbs.} = \text{acceptable}$$

p. Compare the combined tension load to cable tension graph.

q. If the combined tension load is above the maximum range, start the procedures over and set cable tension at the minimum, or shorten the pushrod of the forward elevator bellcrank and repeat Steps l through p.

r. Install lock clips on turnbuckles.

s. Remove the rig pin from the aft elevator bellcrank.

t. Set the forward elevator bellcrank stop bolts for a clearance of 0.37 ± 0.06 inch.

u. Verify the bob weight stop bolt clearance is 0.5 ± 0.06 inch. Adjust the stop bolt, if necessary. The push-pull tube assembly between the control column and the forward elevator bellcrank may need to be adjusted to achieve the required clearance (refer to Step e).

v. The forward elevator bellcrank stop bolt is to make contact before the bob weight stop bolt makes contact with the bob weight. In order to verify that the forward bellcrank bolt makes contact before the bob weight stop bolt makes

contact with the bob weight it may be necessary to disconnect the pushrods at the elevator horns in order to allow enough travel to verify this action. Reconnect the pushrods after this contact has been verified.

w. **Gust Lock Pin Check** - Install the gust lock pin. Verify the elevator is 7° to 15° down (the elevator does not need to be on the down stop with the gust lock pin installed). However, if the elevator is full down and resting on the primary stops, the force required to push on the pilot's control wheel while inserting the gust lock pin must be a maximum of ten pounds. If the force is too high, adjust (shorten) the push-pull tube per Step e, then repeat Step u to check the bob weight clearance. Remove the gust lock pin.

x. Connect the autopilot servo cables to the elevator primary control cables.

y. Perform the CONTROL COLUMN SUPPORT ROLLER INSPECTION procedure.

z. On aircraft equipped with the F1000 Flight Data Recorder, calibrate the Pitch Position Potentiometer. Perform the FLIGHT DATA RECORDER (FDR) - PITCH ADJUSTMENT procedure.

aa. Move the control wheel aft and verify the elevator moves up 20° +1°/-0° and that the surface stops make contact. Move the control wheel forward and verify the elevator moves down 14° +1°/-0° and that the surface stops make contact. If these requirements are not met, repeat this rigging procedure in its entirety.

bb. Remove the travel boards from the horizontal stabilizers, install floorboards, copilot's seat, and replace access panels.

1.6.4 Weight and Balance

This section discusses the accident airplane's calculated weight and balance, which was determined using Air Midwest's FAA-approved weight and balance program (see section 1.18.1.2), and the loading conditions that existed on the day of the accident. Section 1.16.2.1 discusses the airplane's actual weight and balance.

The accident airplane's last weighing on September 8, 2002, determined that the airplane's empty weight was 10,293 pounds. The airplane's balance was determined by the location of the center of gravity (CG), which is usually described as a given number of inches aft of the reference datum.[37] At the time of the airplane's weighing, the CG was determined to be located 282.1 inches aft of the reference datum, which corresponds to a CG location of 14.4 percent mean aerodynamic chord (MAC).[38]

[37] The reference datum is an imaginary vertical plane, arbitrarily fixed somewhere along the longitudinal axis of the airplane, from which all horizontal distances are measured for weight and balance purposes.

[38] According to the FAA's *Aircraft Weight and Balance Handbook*, the MAC is the chord of an imaginary airfoil that has all of the aerodynamic characteristics of the actual airfoil. The chord is drawn through the geographic center of the plan area of the wing. The location of the CG with respect to the MAC is important because it predicts the handling characteristics of the aircraft.

According to the Air Midwest Beech 1900D load manifest form for flight 5481, the operating empty weight was 10,673 pounds,[39] the passenger weight was 3,325 pounds, the weight in the coat closet was 10 pounds, the AFT1 cargo compartment weight was 775 pounds, the AFT2 cargo compartment weight was 45 pounds, the zero fuel weight was 14,818 pounds, the fuel weight at takeoff was 2,200 pounds, and the gross takeoff weight was 17,018 pounds. The flight crew made a 10-pound addition error when summing the weights that comprise the zero fuel weight. As a result, the calculated zero fuel weight was actually 14,828 pounds,[40] and the calculated gross takeoff weight was actually 17,028 pounds. The Beech 1900D maximum gross takeoff weight is 17,120 pounds.

The load manifest form also indicated that the calculated CG index for the accident flight was 81 (37.8 percent MAC). The Air Midwest CG takeoff limits range from indexes of about 23 to 85 (16.7 to 39.2 percent MAC) when a Beech 1900D airplane is at a gross takeoff weight of 17,028 pounds. The Beech 1900D aft CG limit is 40 percent MAC.

Table 2 shows information reported on Beech 1900D load manifest forms for flights flown by the accident airplane after the January 6, 2003, D6 maintenance check. The table shows that the accident flight was calculated to be the most aft loaded of all of the postmaintenance flights. Table 5 in section 1.16.2.2 provides information from the load manifest forms of selected flights before the D6 maintenance check.

Table 2. Weight and balance information for the 10 flights after maintenance.

Date	Flight number and route	Gross takeoff weight (pounds)	CG (percent MAC)[a]	Number of passengers	Cargo (pounds)
01-08-03	**5481/CLT-GSP**	**17,028[b]**	**37.8**	**19**	**820**
01-08-03	5434/LYH-CLT	16,278	25.9	15	470
01-07-03	5461/CLT-LYH	15,118	19.6	6	195
01-07-03	5441/LYH-CLT	13,303	17.3	2	70
01-07-03	5441/CLT-LYH	14,528	19.0	3	120
01-07-03	5514/LWB-CLT	12,618	12.6	0	45
01-07-03	5514/CLT-LWB	14,653	20.8	7	345
01-07-03	5585/AHN-CLT	14,278	23.7	9	320
01-07-03	5585/CLT-AHN	14,413	24.2	5	455
01-07-03	5428/HTS-CLT	13,318	13.6	0	45

Note: The accident flight appears in bold face print. LWB, Greenbrier Valley Airport, Lewisburg, West Virginia; AHN, Athens/Ben Epps Airport, Athens, Georgia.

[a] The CG indexes that correspond to these CG positions are 81, 48, 32, 28, 31, 19, 35, 42, 43, and 20, respectively.

[b] This figure includes the 10-pound addition error made by the flight crew on the load manifest form.

[39] The operating empty weight consisted of the airplane's empty weight, 170 pounds for each pilot, and 20 pounds for each crew bag (one per pilot).

[40] The Beech 1900D maximum zero fuel weight is 15,165 pounds.

1.7 Meteorological Information

Weather observations at CLT are made by an automated surface observing system (ASOS), which records continuous information on wind speed and direction, cloud cover, temperature, precipitation, and visibility.[41] The ASOS transmits an official meteorological aerodrome report (known as a METAR) that is valid at 51 minutes past each hour and a special weather observation as conditions warrant; such conditions include a relevant wind shift, visibility change, and ceiling change (cloud cover or height). Weather observations are transmitted in coordinated universal time (UTC). Eastern standard time is 5 hours behind UTC time.

The 1251Z[42] METAR (0751 local time) indicated that the winds were 260° at 6 knots, visibility was 10 miles, clouds were scattered at 14,000 feet and broken at 25,000 feet, the temperature was 3° Celsius (C), the dew point was -7° C, and the altimeter setting was 29.75 inches of mercury (Hg). The 1351Z METAR (0851 local time) indicated that the winds were 230° at 7 knots, visibility was 10 miles, clouds were scattered at 14,000 feet and broken at 25,000 feet, the temperature was 4° C, the dew point was -6° C, and the altimeter setting was 29.76 inches of Hg.

CLT is also equipped with a terminal doppler weather radar system, which provides windshear and microburst alerts. During the time surrounding the accident, the system did not transmit an alert.

1.8 Aids to Navigation

No problems with any navigational aids were reported.

1.9 Communications

No communications problems were reported between the pilots and any of the air traffic controllers who handled the flight.

1.10 Airport Information

CLT is located about 4 miles west of the city of Charlotte at an elevation of 748 feet mean sea level (msl). An average of 1,250 aircraft operate at the airport daily, about 90 percent of which are scheduled air carrier or air taxi operations; the remainder are general aviation and military operations. The airport has two parallel runways, 18L/36R and 18R/36L, and a third runway, 5/23. Runway 18R, from which flight 5481

[41] Cloud cover is expressed in feet above ground level. Visibility is expressed in statute miles.

[42] The "Z" designation that follows the time in a weather observation stands for Zulu, which indicates UTC time.

took off, is 10,000 feet long and 150 feet wide and is made of wire-combed concrete. The airport was certificated under 14 CFR Part 139.

CLT Airport Operations personnel perform airport inspections two times each day. The first inspection, which begins about 0800, includes all of the airport movement areas. The second inspection, which begins about 1600, includes all of the airport movement areas and the airfield lighting facilities. The self-inspection log sheet indicated no discrepancies for the first inspection performed on the day of the accident. CLT Airport Operations personnel performed a special inspection after the accident. The special inspection, which began about 0906, examined runways 18R/36L and 5/23 and several taxiways for foreign object debris; none was recorded on the log sheet.

CLT has an airport emergency plan detailing response, recovery, and resolution actions in the event of an accident or incident involving aircraft at the airport or within the boundary of Mecklenburg County, North Carolina. (The city of Charlotte is within Mecklenburg County.) CLT is responsible for conducting a full-scale mock disaster drill once every 3 years to test this plan. On May 13, 2000, CLT conducted a full-scale triennial drill with participation from the following organizations: the FAA; CLT Airport Operations, Airport Law Enforcement, and Aircraft Rescue and Firefighting (ARFF); the CLT ATCT; the Charlotte-Mecklenburg Police Department; the City of Charlotte Fire Department (CFD); the North Carolina Air National Guard; the Mecklenburg County Medical Examiner; the American Red Cross; and US Airways.

1.10.1 Aircraft Rescue and Firefighting

CLT and the North Carolina Air National Guard maintain an index D ARFF facility[43] on the airfield. The ARFF station (Station 17), which is owned by the Air National Guard, is continuously staffed with a minimum of nine CFD firefighters. The station houses eight crash trucks, six of which are owned by the Air National Guard (Blaze 1, Blaze 2, Blaze 3, Blaze 5, Blaze 8, and Blaze 18) and two of which (Blaze 7 and Engine 17) are owned by the CFD. An off-airport fire station (Station 30) is the backup facility for all alerts on airport property.

ARFF personnel receive 56 hours of initial training, including classroom instruction and a live burn pit/mobile trainer fire exercise. ARFF personnel use the FAA's aircraft rescue and firefighter computer-based training program, which covers 13 subject areas, to accomplish recurrent training. In addition, the State of North Carolina requires ARFF personnel to have a minimum of 24 hours of continuing education each year in the 13 FAA-required subject areas. To meet this requirement, CFD conducts training during quarterly sessions consisting of 4 hours of classroom instruction and 5 hours of practical skills, for a total of 9 hours per quarter and 36 hours per year.

[43] According to 14 CFR 139.317, an index D ARFF facility is required to have (1) either one firefighting vehicle with 500 pounds of sodium-based dry chemical or Halon 1211 or 450 pounds of potassium-based dry chemical and water with a commensurate quantity of aqueous film forming foam (AFFF) to total 100 gallons and (2) two firefighting vehicles with water and a commensurate quantity of AFFF so that the total quantity of water for foam production carried by all three vehicles is at least 4,000 gallons.

1.10.2 Air Traffic Control

The CLT ATCT is an FAA-staffed combined terminal approach radar control (TRACON)[44] and tower with about 500,000 operations per year. The tower cab is continuously open and is located on the north side of the airport, centered between runways 18L/36R and 18R/36L. Air traffic control (ATC) radar data are provided by an airport surveillance radar-9 sensor located midfield on the airport between runways 18R/36L and 5/23. Radar data processing is performed by an automated radar terminal system-3A processor.

Flight 5481 was handled by three air traffic controllers on the day of the accident: the clearance delivery controller, the ground control west controller, and the local control west controller. Two local control east controllers (one of which was at the developmental level), a ground control east controller, and a tower supervisor were also present at the CLT ATCT at the time of the accident.

The ground control west controller has been a controller at the CLT ATCT since June 1982. He was a controller for the U.S. Air Force before beginning work for the FAA. He first became aware of a problem with flight 5481 when the local control west controller stated that the airplane might stall. The ground control west controller then noticed the airplane climbing from about 200 feet. He stated that the climb was steep and that, at an altitude of about 1,000 feet, the airplane "winged over to the left." He also stated that he saw the airplane descend in a nose-down attitude, pick up speed, and level off at about the height of the US Airways hangar. He thought that the pilot had briefly recovered control of the airplane, but then its nose went down. He stated that the airplane hit the hangar and that he then saw a ball of fire. He further stated that both engines appeared to be running throughout the flight and that he did not notice anything fall from the airplane.

The local control west controller has been a controller at the CLT ATCT since 1987. He was a controller at the RDU ATCT and with the U.S. Air Force before beginning work at the CLT ATCT. The local control west controller stated that the airplane lifted off about 3,200 feet down the runway and started a normal climb that kept getting steeper. He added that, rather than entering a departure turn to the right, the airplane continued to pitch higher and was nearly vertical between 800 and 1,000 feet. The local control west controller stated that he realized something was wrong with the airplane and that he said aloud, "that guy's gonna stall." He stated that the airplane's rate of pitchup was smooth and not like an aerobatic demonstration. He saw the airplane fall to the left, in an apparent stall, and then regain a somewhat-level flight attitude. Next, he saw the airplane roll to the right, flip upside down, and hit the hangar. He stated that he saw a ball of fire afterward.

The ground control east controller was positioned closest to the crash phone. (The crash phone links the ATCT directly with ARFF Station 17, the CLT Airport Operations Center, and the North Carolina Air National Guard.) The controller stated that she heard

[44] TRACON personnel did not interact with the accident flight.

someone yell, "crash phone," and that she picked up the phone while the airplane was still in the air. The controller stated that she saw the airplane "wiggle," "go nose down," and crash just as the phone was answered. Emergency response information is detailed in section 1.15.1.

1.11 Flight Recorders

1.11.1 Cockpit Voice Recorder

The accident airplane was equipped with a Fairchild model A-100A CVR, serial number 61979. The exterior of the CVR was heavily covered with soot and showed evidence of significant heat exposure. The interior surfaces and components were covered with soot. Some of the internal components appeared to be partially melted. The exterior of the case that housed the tape spool assembly was covered with soot but was generally intact, with little or no mechanical damage noted. The tape spool assembly and other components inside the case were not damaged and were generally in good condition. No apparent evidence of heat or mechanical damage to the tape was found.

The CVR was sent to the National Transportation Safety Board's audio laboratory in Washington, D.C., for readout and evaluation. The tape was played back normally and without difficulty. The CVR data started about 0815:41 and continued uninterrupted until 0847:28.1. The recording consisted of four separate channels of audio information: the cockpit area microphone, the captain's and first officer's audio panels, and the public address system. Hot microphone transmissions from the captain and the first officer were also captured on their respective audio channels.

The cockpit area microphone and public address system information were good quality.[45] The captain's and first officer's audio panel information was fair to poor quality with respect to the audio captured from the airplane's very high frequency (VHF) radio systems, but the audio information from the captain's and the first officer's hot microphones was excellent to good quality. A transcript was prepared of the entire 31-minute 47-second recording (see appendix B).

The volume of the incoming VHF radio messages during the accident flight was extremely low compared with the volume of the audio captured by the flight crew's hot microphones. Because the audio from the captain's (or first officer's) hot microphone was recorded on the same channel as the audio from the VHF radio, the two audio signals could not be isolated from each other on the recording. (The mixing of these two audio signals onto the same CVR channel is normal and is not unique to this CVR system.)

[45] The Safety Board rates the quality of CVR recordings according to a five-category scale: excellent, good, fair, poor, and unusable. See appendix B for a description of these ratings.

1.11.1.1 Safety Recommendations A-97-36 and A-02-25

Beech 1900 series airplanes had previously experienced problems with the low signal volume of VHF radio messages as recorded by the CVR. On May 22, 1997, the Safety Board issued Safety Recommendation A-97-36, which asked the FAA to

> Promptly require the inspection of the cockpit voice recorder (CVR) and associated equipment on all Beech 1900 aircraft and ensure that operators take corrective action to repair deficient CVR systems so that the intelligibility of recorded communications, including radio transmissions to and from the airplane, is as high as practicable.

In response to the Safety Board's recommendation, Raytheon Aircraft Company issued Service Bulletin (SB) 23-3094, which recommended the incorporation of an improved CVR amplifier and new circuitry for the wiring. Subsequently, the FAA issued Airworthiness Directive (AD) 2000-20-07, which required that all applicable Beech 1900 series airplanes comply with Raytheon Aircraft's SB. On January 30, 2001, the Board stated that, with the issuance of AD 2000-20-07, the FAA had completed the recommended action, and, as a result, Safety Recommendation A-97-36 was classified "Closed—Acceptable Action." The accident airplane's maintenance records indicated that the actions required by the AD were accomplished on March 3, 2001.

On August 29, 2002, the Safety Board issued Safety Recommendation A-02-25 as a result of longstanding concerns regarding the availability of CVR information for reportable accidents or incidents. Specifically, the Board was concerned about tape or memory that had been overwritten by events subsequent to an accident or incident and recording systems that had malfunctioned or were inoperative at the time of an accident or incident. Safety Recommendation A-02-25 asked the FAA to

> Require that all operators of airplanes equipped with a cockpit voice recorder (CVR) test the functionality of the CVR system prior to the first flight of each day, as part of an approved aircraft checklist. This test must be conducted according to procedures provided by the CVR manufacturer and shall include, at a minimum, listening to the recorded signals on each channel to verify that the audio is being recorded properly, is intelligible, and is free from electrical noise or other interference.

Safety Recommendation A-02-25, which was classified "Open—Acceptable Response" on January 16, 2003, is discussed in detail in section 2.6.

1.11.2 Flight Data Recorder

The accident airplane was equipped with an L3 Communications Fairchild model F-1000 FDR, serial number 01110. The FDR used a solid-state flash memory module, stored in a crash-protected memory case, as the recording medium. The FDR system, as

delivered by the airframe manufacturer, was designed to record 18 parameters.[46] In response to a 1997 FAA rule that mandated additional recording requirements, the airplane's FDR was upgraded in 2001 to record 4 additional parameters,[47] for a total of 22 parameters.

The FDR was sent to the Safety Board's laboratory for readout and evaluation. The fire and impact damage to the exterior of the FDR prevented the data from being extracted in the normal manner. The solid-state memory module, which was in good condition, was extracted from the crash-protected memory case, and a new connector was attached to the module. The module was then inserted into a surrogate F-1000 FDR, and the data were downloaded and decompressed using the manufacturer's software. About 95 hours of data were recorded on the FDR, including data from the accident flight. The FDR powered up for the accident flight just before 0825:00, and the last valid data were recorded just after 0847:28.

Two parameters—left engine torque and lateral acceleration—did not yield expected values. The left engine torque parameter did not show any activity during the accident flight but was intermittently active during other flights for which recorded data existed. The lateral acceleration parameter exhibited values that were characteristic of lateral acceleration (based on an examination of the magnetic heading and yaw control values) but only on an intermittent basis. As a result, these two parameters were deemed inoperable.

1.11.2.1 Flight Data Recorder Study

The Safety Board conducted an FDR study to examine the relationship between the 10 flights before the D6 maintenance check on January 6, 2003, and the 9 flights after the D6 maintenance check. (The accident flight was the 10th flight after D6 maintenance.) The study results showed that, before maintenance, the pitch control position values during cruise flight were normally about 4° AND and that, after maintenance, the cruise values were normally about 13° AND. (As previously stated, the FDR pitch control position sensor is attached to structure located to the left of the base of the control column; thus, the pitch control position parameter represents the control column position and not the elevator position.) Additional information regarding the 9° AND shift in the FDR pitch control position is discussed in sections 1.16.1 (ground test results) and 1.16.2 (airplane performance study results).

The FDR study also examined the pitch control position values recorded during each preflight elevator control check. The study results indicated that, for the 10 flights before the D6 maintenance check, the full forward position recorded by the FDR was usually 15.6° AND. The study results further indicated that, for the nine flights after the

[46] The 18 parameters were airspeed, comm1 keying, comm2 keying, flap position, frame counter, longitudinal acceleration, magnetic heading, pitch attitude, pitch control position, pressure altitude, prop rpm left, prop rpm right, prop reverse left, prop reverse right, roll attitude, torque left, torque right, and vertical acceleration.

[47] The four parameters were lateral acceleration, pitch trim control, roll control, and yaw control.

D6 maintenance check, the full forward position recorded by the FDR was usually 16.5° AND.[48] During the accident flight, the FDR recorded a maximum full forward position of 17.2° AND and a maximum full aft position of 19.2° ANU.[49]

In addition, the FDR study examined the maximum aft pitch control position that the FDR recorded during the takeoff rotation. Before the D6 maintenance check, the maximum aft pitch control position value at rotation ranged from 2.7° AND to 7.1° ANU; after the D6 maintenance check, the value ranged from 4.2° AND to 0.2° ANU. During the accident flight, the maximum aft pitch control position value at rotation was 9.5° AND.

1.12 Wreckage and Impact Information

1.12.1 General Wreckage Description

The airplane's main wreckage was located about 30 feet west of the southwest corner of the US Airways maintenance hangar. The debris path extended from the main wreckage site about 160 feet to the southwest and about 170 feet to the southeast. In addition, a few airplane parts were found north of the main wreckage. All of the airplane structure was accounted for along the debris path.

The postcrash fire destroyed most of the airplane structure. The main wreckage site contained the remnants of the fuselage, both wings, both engines, and the empennage. The forward section of the fuselage, the left wing, and the inboard right wing were found in a normal, upright orientation. The fuselage from the trailing edge of the wing to the forward edge of the cargo door was found in an inverted position. The fuselage surrounding the cargo compartment was lying on its right side. The horizontal stabilizer was found inverted (that is, lying on its upper surface). Remnants of fire-damaged elevators and trim tabs remained attached to the horizontal stabilizer.

A large portion of the northwest front side of the hangar wall showed severe fire and impact damage. The wall, which was constructed of reinforced cinder block and exterior metal flashing that extended from about 20 feet above the ground to the roof, had a 19- by 38-inch hole and was cracked vertically and horizontally. Also, a 16- by 17-foot section of the wall was displaced inward. In addition, wall debris was scattered about the base of the wall, and several pieces of wall material were found mixed with the airplane wreckage at the main wreckage site.

[48] For these nine postmaintenance flights, the elevator position was limited to a maximum of about 7° AND.

[49] Ground testing (see section 1.16.1) showed that these values exceeded the usual values and were consistent with high forces applied to the control column, resulting in cable stretch.

1.12.2 Fuselage

The nose of the airplane was crushed rearward. The cockpit exhibited fire and impact damage. Between the main entry door and the front wing spar, the lower fuselage was intact but crushed, and the upper fuselage was consumed by fire. The fuselage structure above the wing center section was consumed by fire except for the right forward emergency exit and surrounding structure, which remained intact but was distorted and fire damaged. The aft fuselage, from just forward of the aft emergency exits to the cargo compartment partition, had separated from the forward fuselage, with the rudder and elevator cables stretched between the two sections. The fuselage had also separated near the cargo compartment partition, and the aft fuselage section containing the cargo compartment was found on top of the right wing and was mostly consumed by fire. The portion of the fuselage from the front wing spar to the nose was on a magnetic heading of about 238°, and the portion of the fuselage from just forward of the aft emergency exits to the cargo compartment partition was on a magnetic heading of about 90°.

The captain's four-point, rotary-vaned seatbelt buckle was found unlatched in the cockpit wreckage. The captain's fixed (left) lapbelt fitting was the only part attached to the buckle; the shoulder strap fittings and right lapbelt fitting were missing. The first officer's fixed (right) lapbelt fitting and shoulder strap fitting were found attached to his four-point, rotary-vaned seatbelt buckle. (See section 1.15 for information about the location of the captain's and first officer's bodies.)

On February 24, 2003, the Safety Board examined the captain's seatbelt buckle at Pacific Scientific (the manufacturer of the buckle), Duarte, California. The buckle was charred, and the buckle handle was warped. The buckle handle could be rotated in the counter-clockwise direction but could not be rotated in the clockwise direction.

The buckle's five spring-loaded locking pawls, which retain the fittings when they are inserted into the buckle, were examined. Four of the locking pawls—the left shoulder harness pawl, the right shoulder harness pawl, the right lap pawl, and the crotch strap pawl—were depressed.[50] The left lap pawl (for the left fixed lapbelt fitting) was partially raised. When the left lap pawl was manually depressed, the left fixed lapbelt fitting released from the buckle.

Also on February 24, 2003, the Safety Board conducted a test to determine whether a control wheel could contact and release a pilot's seatbelt buckle. The test was conducted at Northrop Grumman, Los Angeles, California, using a Beech 1900C, N19NG, owned by the company.[51] A subject who was 5 feet 4 inches tall and weighed 135 pounds[52] sat in the captain's seat. When the captain's seat was in the second most forward position

[50] The crotch strap pawl was not used because the Beech 1900 does not have a crotch strap.

[51] Raytheon Aircraft Company verified that the cockpit seats, seat tracks, control wheels, and crew restraints installed in N19NG were representative of those in the accident airplane.

[52] The captain's most recent FAA medical certificate indicated that she was 5 feet 6 inches tall and weighed 148 pounds.

along the seat track[53] and the subject pulled the control wheel full aft and rotated it clockwise, the control wheel did not contact the seatbelt buckle. When the captain's seat was in the full forward and full up position and the subject pulled the control wheel full aft and rotated it clockwise, the control wheel contacted the seatbelt buckle and released it.[54]

In addition, the locking pawls from the captain's and the first officer's seatbelt buckles, as well as those from another Air Midwest seatbelt buckle (which had been removed from service), were examined by microscope at the Safety Board's Materials Laboratory. The locking pawls on the captain's seatbelt buckle did not show any significant witness marks. The locking pawls on the first officer's seatbelt buckle showed impression marks. The locking pawls on the other Air Midwest seatbelt buckle showed minor wear but no impression marks.

More than 10 years before the flight 5481 accident, engineers from Pacific Scientific and The Boeing Company designed a guarded seatbelt buckle with a protective circular guard around the rotary vanes of the seatbelt to prevent the inadvertent release of the restraint. Because unguarded rotary seatbelt buckles pose an unnecessary safety risk to flight crewmembers since the buckles may become unlatched, the Safety Board issued Safety Recommendation A-03-57 on January 2, 2004. Safety Recommendation A-03-57 asked the FAA to "identify all airplanes equipped with unguarded flight crewmember rotary seatbelt buckles and require replacement with guarded buckles that cannot be inadvertently unlatched."

1.12.3 Engines

The left engine was lying upright immediately forward of the engine nacelle and was displaced about 45° to the left of the airframe centerline. The right engine was lying on its right side forward of the left wing center spar and was displaced about 90° to the left of the airframe centerline.

Both propeller assemblies were found outside the main wreckage area and separate from their respective engines. No impact marks were found on the left propeller assembly that could positively determine the exact blade pitch angle at the time of the accident. However, the position of the cylinder buckles around the piston suggested that the piston was not in reverse or in feather but was at some point within the propeller blade operating range. One impact mark (a puncture hole) found on the right propeller assembly's spinner was consistent in size and shape with a blade counterweight. According to Hartzell Propeller, the location of the puncture hole in relation to the blade plane of rotation corresponded to a blade pitch angle of about 22°.

[53] The captain's seat was found in this seat track position, but the seat height could not be determined because of the damage to the seat.

[54] During the on-site investigation of this accident, an Air Midwest Beech 1900 pilot informed the Safety Board that he had experienced the uncommanded release of his seatbelt when the control wheel was pulled aft, striking one of the buckle's vanes. In addition, the Air Line Pilots Association reported five instances of a pilot's seatbelt becoming unbuckled when the control wheel was pulled aft and the wheel, or a clipboard attached to the wheel, contacted a buckle vane.

From January 27 to 31, 2003, the engines were disassembled and examined at Pratt & Whitney Canada's facility in St-Hubert, Quebec, Canada. On February 12, 2003, the propellers were disassembled and examined at Hartzell Propeller's facility in Piqua, Ohio. No preexisting defects or anomalies were found that would have prevented normal operation of the engines or the propellers.

1.12.4 Pitch Control System

The rivets connecting the elevator control horns to the elevator shafts were tight, and the control horns were solidly fixed to the elevator shafts. The control horns moved freely in their respective bearings. The primary stop bolts were attached to the elevator control horn supports and were found safety wired.

The aft end of each aft pushrod was connected to its respective elevator control horn, and the forward end of each pushrod was connected to the aft bellcrank and its respective aft bellcrank link. The length of the left aft pushrod was 20.53 inches, and the length of the right aft pushrod was 20.44 inches.

Most of the structure that contained the rig pin holes for the aft bellcrank was missing, and the part that remained was heavily fire damaged. The left tension spring was found with its upper end attached to its attachment link and its lower end attached to structure. The right tension spring was found with its upper end separated from its attachment link and its lower end attached to structure. Examination of the right tension spring at the Safety Board's Materials Laboratory showed partial surface melting of the bellcrank adjacent to the right spring attachment link (the upper end of the spring) and some resolidified metal adjacent to the lower end of the spring. Magnified visual examination of the unattached end of the right spring and the right attachment link showed no evidence of unusual wear patterns, scratching, or other damage related to the separation of the spring from the link.[55]

The elevator control cables generally had numerous bends and kinks. Two of the elevator AND cable's seven spirally wound strands were completely broken and unwound, and one strand was partially broken and unwound. (These strands were located near the trailing edge of the wing, where the fuselage had folded toward the right wing tip.) The unwound sections of the cable were examined at the Safety Board's Materials Laboratory, and no evidence of fatigue cracking or a preexisting condition was found.

The ANU turnbuckle was almost fully contracted, and the AND turnbuckle was almost fully extended. The measurement from the center of the tooling hole in one threaded cable terminal to the center of the tooling hole in the other cable terminal was 5.54 inches for the ANU turnbuckle and 7.30 inches for the AND turnbuckle. In addition, the AND turnbuckle had one thread visible, and the ANU turnbuckle did not have any threads visible. Figure 6 shows the turnbuckles as found in the wreckage and a drawing that shows a turnbuckle barrel and threaded cable terminals.

[55] During ground tests on January 21 and 22, 2003, a tension spring was disconnected from the test airplane to determine the effect of a disconnected spring on the forces felt at the control column. This test revealed that about 6 additional pounds of force were required to move the control column forward.

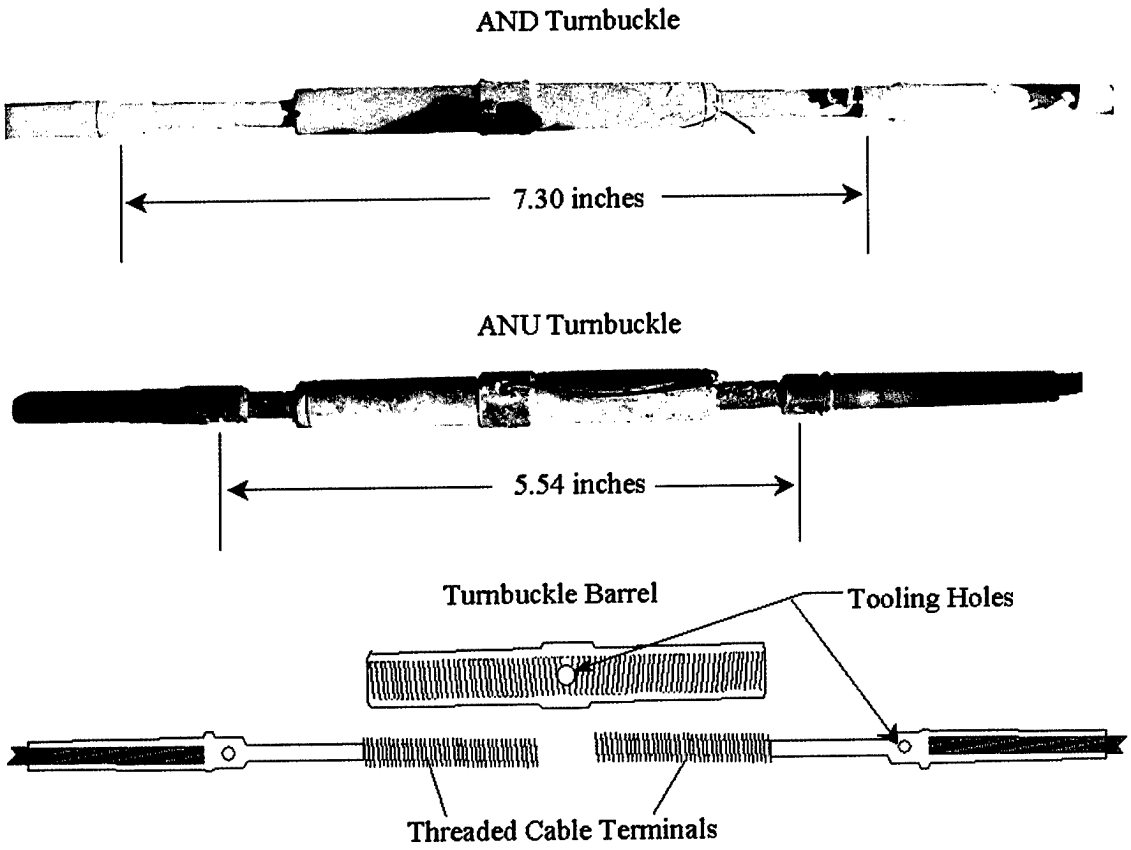

Figure 6. Turnbuckles as found in the wreckage.

The AND turnbuckle was extended 1.76 inches more than the ANU turnbuckle. After the accident, Air Midwest surveyed its entire fleet of 42 Beech 1900D airplanes, which represented 25 percent of the 164 Beech 1900D airplanes active in the North American fleet. Air Midwest data submitted to the Safety Board indicated that, on average, the AND turnbuckle was extended 0.04 inch less than the ANU turnbuckle.

The forward bellcrank had fractured into two pieces, and the fractured surface did not exhibit the soot that covered the bellcrank side surfaces and surrounding structure. The forward bellcrank forward (AND) stop bolt was bent and measured 0.93 inch in length. The control cables and the aft end of the forward push-pull tube were attached to the forward bellcrank.

The forward push-pull tube and rod end were bent. The push-pull tube was measured in segments at the Safety Board's Materials Laboratory, and the total length of the rod was 15.33 inches. The rod end had six threads visible.[56]

[56] The number of visible threads can differ among Beech 1900D airplanes.

The control column was dented and slightly crushed but was intact. The left and right pivot bearings were found in the wreckage. The captain's and the first officer's control column shaft and support assemblies had separated from the forward subpanel structure, and their control wheels had separated from the control column shaft assembly. The roller slider assemblies contained within the captain's control column support assembly were burned; the shaft was displaced away from the center of the rollers, and the slider rollers were unable to rotate. The roller slider assemblies contained within the first officer's control column support assembly were able to rotate. The roller containing an eccentric screw rotated freely on its bearing, and a clearance of about 0.06 inch existed between the rollers and the control column shaft assembly.[57]

The bob weight and its surrounding structure were displaced from their normally rigged positions and exhibited impact damage that was consistent with the impact damage found on the nose of the airplane. The gap between the head of the stop bolt and the bob weight could not be measured because of the severe impact damage in that area.

1.12.4.1 Pitch Trim Control System

The elevator trim tab control wheel was intact and was attached in the cockpit. The pitch trim appeared to be near the full AND position. The pitch trim control cables were broken. The control cables were in the correct orientation. The left and right drums had their respective cables wrapped around to the middle position.

1.13 Medical and Pathological Information

Tissue specimens from the captain and the first officer tested negative for ethanol and a wide range of drugs, including major drugs of abuse. Postaccident drug tests on the two ramp agents who handled the accident flight and their supervisor as well as the mechanic and the quality assurance inspector who worked on the accident airplane were negative for drugs of abuse.[58]

1.14 Fire

No evidence of an in-flight fire was found. A postcrash fire developed after airplane impact. According to interviews with ARFF personnel and a videotape taken by the CFD and the Charlotte-Mecklenburg Police Department, the main fire was at the wreckage site, and spot fires occurred along the grass strip on the parking lot side of the airport perimeter fence and in a gully south of the accident site. Thick black smoke emanated from the southwest corner of the US Airways hangar. ARFF personnel estimated that it took about 3 minutes of AFFF application to knock down the main fire.

[57] The Beech 1900D AMM specifies a 0.01-inch gap between the rollers and the control column shaft assembly.

[58] Urine samples were obtained on January 8, 2003, at 1530 for one ramp agent, 1745 for the other ramp agent, 1230 for their supervisor, and 1542 for the quality assurance inspector. The mechanic's urine sample was obtained on January 9, 2003, at 1000.

1.15 Survival Aspects

Autopsy results from the Mecklenburg County Medical Examiner indicated that the cause of death for all of the airplane occupants was "multiple blunt force injuries due to airplane crash." The captain's body was found about 4 feet in front of the cockpit wreckage. The medical examiner did not find any significant markings on her torso that would have been left by the lapbelt or shoulder harness on airplane impact. The first officer was found restrained in his seat with his lapbelt and shoulder harness buckled.

1.15.1 Emergency Response

According to the crash phone transcript,[59] the crash alarm sounded at ARFF Station 17, the CLT Airport Operations Center, and the North Carolina Air National Guard about 0847:28. The ground control east controller stated, about 0847:37, "an emergency...landing right now at the US Air maintenance ramp...right at the corner of the building...there's a fire." About 0847:47, a CFD firefighter at the ARFF station asked the controller what type of airplane had crashed and, about 0847:49, whether the airplane was commercial or small. About 0847:52, the controller responded that the airplane was a Gulfstream III. About 0847:55, the controller stated, "no no no," and a hangup sound was recorded. One second later, the controller stated that a Beech 1900 had crashed, but, in a postaccident interview, the controller indicated that she was not able to complete this transmission before the hangup sound occurred.

About 0848:31, an ARFF captain notified the CFD dispatch center of the airplane crash. The CFD dispatch center then dispatched CFD fire rescue personnel and notified the Charlotte-Mecklenburg Police Department and Mecklenburg Emergency Medical Service dispatch center.[60]

Four ARFF vehicles (Blaze 1, Blaze 2, Blaze 5, and Blaze 7) and nine ARFF personnel responded to the initial call to the ARFF station. Blaze 2 had a speed restriction of 30 mph during emergency operations because the hubs on the vehicle were subject to a U.S. Air Force restriction notice.[61] One of the firefighters aboard Blaze 2 reported that the vehicle traveled to the accident site at a speed of about 50 mph.

In addition, Engine 30, with four ARFF personnel, responded to the initial call. Engine 30 is normally based at the off-airport fire station that responds to emergencies on

---

[59] The crash phone transmissions were recorded in the CLT Airport Operations Center.

[60] CFD was also responsible for notifying the Charlotte-Mecklenburg Emergency Management Office, which was responsible for notifying the American Red Cross and the North Carolina Department of Emergency Management. The Mecklenburg Emergency Medical Service was responsible for notifying area hospitals and dispatching area ambulances, medical evacuation helicopters, triage teams, medical examiners, medical mutual aid responders, and volunteer departments.

[61] In March 1998, the U.S. Air Force issued a restriction notice for all P-23 trucks (such as Blaze 2) in its fleet because of an increasing number of hub axle failures. Although the P-23 truck, an eight-wheel-drive vehicle, would remain stable in the event of a hub axle failure, the Air Force determined that a separated wheel resulting from the failure could be dangerous to people near the truck at the time.

airport property but was at Station 17 in place of Engine 17, which was at training. Engine 17, with four ARFF personnel, left training to respond to the accident.

CFD radio logs indicated that the first ARFF unit arrived at the accident site about 0849:10, about 1 minute 42 seconds after the time of the crash alarm.[62] A captain from ARFF Station 17 was the initial fire incident commander at the accident site. He established a staging area for emergency response vehicles at gate 17, an access point along the airport perimeter fence, and an initial triage area on a taxiway southwest of the accident site. The staging area location was later changed to gate 66 when it was determined that the accident site was located closer to that gate.

ARFF personnel indicated that the first unit on scene (Blaze 2) was directed to disperse AFFF from the turret nozzle located on the top of the vehicle's cab. The initial dispersion consisted of two or three sweeps of the main wreckage area. The ARFF personnel paused for the visibility to clear and then dispersed AFFF during two more sweeps. Afterward, ARFF personnel used hand lines from Blaze 2 and Blaze 7 to suppress and control spot fires and flareups. In addition, ARFF personnel from Engine 17 used hand lines to suppress the fire along the grass strip on the parking lot side of the airport perimeter fence and in the gully area.

A CFD battalion chief arrived on scene about 0858:49 and assumed control of the accident site about 0859:21. According to the CFD radio log, a "bulk of fire knock down" call was transmitted about 0901:45. The CFD radio logs also indicated that a "fire control" call was transmitted about 0912:25, about 23 minutes after the initial dispersion of AFFF.

US Airways personnel from inside the hangar responded to the accident, and ARFF personnel observed the US Airways personnel using three portable fire extinguishers. CLT Airport Law Enforcement and the Charlotte-Mecklenburg Police Department also responded to the accident. In addition, the Mecklenburg Emergency Medical Service arrived at the accident scene within 5 to 7 minutes of notification of the accident. The medical incident commander notified local area hospitals while she was en route to the accident site and set up a formal triage area near gate 66 when she arrived on scene. The CFD emergency medical service coordinator told the medical incident commander that no one had survived the accident, so the medical incident commander indicated that the additional units responding to the scene and to hospitals should return to normal operations.

[62] Title 14 CFR 139.319(i) requires at least one ARFF vehicle (at airports certificated under Part 139) to be capable of achieving a 3-minute response time from the time of the alarm to the beginning of fire-fighting agent application. The ARFF vehicle is required to travel from its assigned post to "the midpoint of the furthest runway serving air carrier aircraft" or "any other specified point of comparable distance on the movement area which is available to air carriers." All other ARFF vehicles are required to reach the same specified point and begin fire-fighting agent application within 4 minutes.

1.16 Tests and Research

1.16.1 Ground Tests

From July 29 to 31, 2003, the Safety Board conducted ground tests on the pitch control system of a Beech 1900D, N46YV,[63] at Raytheon Aircraft Company's Wichita facility. One purpose of the tests was to compare the test airplane's elevator position with the pitch control position recorded on the FDR for various elevator control system configurations. Another purpose of the tests was to observe which elevator control system stops were contacted in each system configuration when the control column was pushed full forward.

1.16.1.1 Baseline Configuration

For the baseline configuration, the elevator control system was rigged according to the Beech 1900D AMM revised elevator control system rigging procedure (section 27-30-02). When the control column was at neutral, the elevator deflection was 0° (as measured by Raytheon Aircraft's master travel board), and the pitch control position recorded on the FDR was 0.1° AND. When the control column was moved full forward, the elevator deflection was 14.5° AND (as measured by the travel board), the pitch control position recorded on the FDR was 14.6° AND, and the elevator control system made contact with the primary stop at the elevator control horn.

1.16.1.2 Turnbuckle Length Adjustments

The test airplane's elevator cable turnbuckles were adjusted a total of 3.1 inches to replicate the accident airplane's 9° AND shift. To achieve this shift, the test airplane's elevator cable turnbuckles were adjusted to matching lengths while maintaining proper cable tension. The elevator was held at the 4° AND position (to replicate the accident airplane's premaintenance pitch control position values during cruise flight),[64] and the turnbuckles were adjusted until the FDR showed that the control column position was 13° AND (to replicate the accident airplane's postmaintenance pitch control position cruise values).

While the turnbuckles were being adjusted, the control column moved forward, and the travel board showed that the elevator did not move, as designed. When the elevator was released, the control column moved forward and stopped when the elevator reached 6.8° AND, but the pitch control position recorded on the FDR was 16.3° AND. The elevator control horns no longer made contact with the primary stops; instead, the forward bellcrank rested on the secondary stop.

---

[63] The complete results of the July 2003 ground tests can be found in the public docket for this accident, DCA03MA022, on the Safety Board's Web site at <http://www.ntsb.gov>. See the Systems Group Factual Addendum for Ground Tests at Raytheon Aircraft Company on July 29-31, 2003. On January 21 and 22, 2003, a set of less extensive ground tests was performed at Raytheon's Wichita facility on the pitch control system of another Beech 1900D, N116YV. The results of the January 2003 ground tests can be found in the Systems Group Factual Report in the public docket for this accident.

[64] The 4° AND position is typical for cruise flight.

1.16.1.3 Cable Tension Adjustment Procedural Errors

This test altered or omitted specific steps in the elevator control system rigging procedure. Some of these alterations or omissions were intended to replicate actions reported by the mechanic who adjusted the elevator cable tension on the accident airplane and the quality assurance inspector who was providing OJT to the mechanic.

The forward and aft pushrod lengths and elevator control stop settings were adjusted so they matched those found in the accident airplane wreckage. A rig pin was installed in the aft bellcrank, and the cable tensions were released, which allowed the control column to move forward while the elevator was held at neutral by the aft rig pin. The forward bellcrank rig pin was installed without engaging the bellcrank arm. The rig pin was not in the rig pin hole of the forward bellcrank arm but was aft of the arm. The control column could not be returned from forward to neutral because the aft side of the forward bellcrank arm would contact the forward rig pin. Elevator tension was then increased by tightening the turnbuckle on the AND cable (which is located above the ANU cable). This adjustment caused the forward bellcrank to move aft until the aft side of the bellcrank arm contacted the forward rig pin. The turnbuckle barrels were then rotated to maintain this position while establishing cable tension.

When the aft rig pin was removed and the control column was moved full forward, the ANU turnbuckle length was 5.12 inches, and the AND turnbuckle length was 7.70 inches. The elevator deflection was 7.7° AND (as measured by the travel board), and the pitch control position recorded on the FDR was 13.3° AND. The elevator control horns did not contact the primary stops; instead, the forward bellcrank rested on the secondary stop.

1.16.1.4 Cable Stretch

This test was performed to measure the amount of cable stretch that could be introduced by applying force to the control column while the forward bellcrank engaged the secondary up and down stops. (In the misrigged position, the forward bellcrank contacted the secondary down stop.) When 120 pounds of forward force was applied to the control column, the FDR recorded a column position that was 0.5° AND beyond the point at which the elevator stopped moving. The amount of aft force required to pull the control column from its resting position to the up stop was 37 pounds. When an additional 87 pounds of aft force was applied to the control column, the FDR recorded a column position that was 2.4° ANU beyond the point at which the elevator stopped moving.

1.16.2 Airplane Performance Study

The Safety Board conducted an airplane performance study for the accident airplane.[65] The study included a weight and balance study, a load manifest study, an elevator control authority study, and Beech 1900D simulations. As part of the study, ATC transcript, ATC radar, CVR transcript, and FDR data were correlated to a common

[65] The complete airplane performance study can be found in the public docket for this accident, DCA03MA022, on the Safety Board's Web site.

reference time. The airplane performance study determined that the accident airplane's actual weight was 17,700 ±200 pounds and that the accident airplane's actual CG position was 45.5 ±2 percent MAC. The study also determined that the actual elevator travel available was from about 20° ANU to about 7° AND and that about 9° to 10° AND elevator was required to establish a controlled climb at the accident airplane's actual weight and CG position. The study results are discussed in detail in sections 1.16.2.1 through 1.16.2.4.

1.16.2.1 Flight 5481 Weight and Balance Study

The Safety Board calculated the accident airplane's weight using three methods: the Air Midwest weight and balance program, which was used by the flight crew (see section 1.16.2.1.1); an airplane component buildup based on the available physical evidence (see section 1.16.2.1.2); and an analysis of the airplane's takeoff ground roll dynamics using FDR data (see section 1.16.2.1.3). The Board calculated the accident airplane's balance by distributing the calculated airplane weight according to available component weight and component location information.

1.16.2.1.1 Air Midwest Weight and Balance Program

The load manifest for flight 5481 indicated that the airplane had a calculated gross takeoff weight of 17,028 pounds and a calculated CG position of 37.8 percent MAC. According to the Air Midwest weight and balance program at the time of the accident, flight 5481 was operating within the Beech 1900D weight and CG envelope (17,120 pounds and 40 percent MAC, respectively).

If the extra weight of the two reportedly heavy bags (see section 1.1) had been included in the Air Midwest weight and balance program calculation, flight 5481 would have had a gross takeoff weight of 17,078 pounds and a CG position of 38.8 percent MAC. Also, if the Air Midwest weight and balance program calculation had accounted for the two reportedly heavy bags, estimated an additional 110 pounds of fuel at takeoff,[66] and recorded the 12-year-old passenger's weight as 80 pounds rather than 175 pounds,[67] flight 5481 would have had a gross takeoff weight of 17,093 pounds and a CG position of 38.8 percent MAC. Thus, under these two scenarios, flight 5481 would still have been operating within the Beech 1900D weight and CG envelope.

1.16.2.1.2 Airplane Component Buildup Method

The Safety Board calculated the weight and balance for flight 5481 by adding the airplane component weights, which included the empty weight; the crew weight, including crew baggage; the passenger weight, including carry-on baggage; the cargo

[66] The flight 5481 dispatch release indicated that the airplane was loaded with 2,420 pounds of fuel before takeoff. Given Air Midwest's taxi fuel burn assumption of 110 pounds, the airplane would have had 2,310 pounds of fuel at takeoff. The load manifest indicated 2,200 pounds of fuel at takeoff.

[67] The Air Midwest Flight Operations Procedures Manual at the time of the accident (see section 1.18.1.2) stated that an average weight of 175 pounds could be used for each adult passenger during the winter and that an average weight of 80 pounds could be used for children between the ages of 2 and 12 years.

weight (in the coat closet and the AFT1 and AFT2 cargo compartments); and the fuel weight. The information sources for the airplane component weights used in the Board's weight and balance study are shown in table 3.

Table 3. Information sources for airplane component weights.

Component	Air Midwest average weights	Medical examiner	FAA medical certificate	Next of kin	Wreckage evidence	Actual weights	Load manifest	Dispatch release
Airplane empty weight						X		
Crew weight	X	X	X					
Crew baggage weight	X				X			
Passenger weight	X	X		X				
Carry-on baggage weight	X				X			
Checked baggage weight (AFT1)	X				X			
Cargo weight (AFT2)						X		
Coat closet weight							X	
Fuel weight								X

Note: The Air Midwest average weight program in effect at the time of the accident is discussed in section 1.18.1.2.

The results of the airplane component buildup method for flight 5481's weight and CG position were based on the following: the airplane operating empty weight reported on maintenance records; the flight crew and passenger weights documented by the medical examiner; the dry weight of personal effects and the dry weight of checked, carry-on, and crew baggage;[68] 45 pounds in the AFT2 cargo compartment (the actual weight of a tire stored in the compartment); 10 pounds in the coat closet; and 2,310 pounds of fuel. On the basis of this information, the Safety Board estimated that flight 5481 had a minimum gross takeoff weight of 17,443 pounds and a CG position of 43.3 percent MAC, which was outside of the Beech 1900D weight and CG envelope.

[68] The weight of checked, carry-on, and crew baggage; personal effects; and manuals and logs was 1,384 pounds. Because the weight for these items included the weight of AFFF, the items were dried and reweighed, and the dry weight was 1,199 pounds.

1.16.2.1.3 Takeoff Ground Roll Weight Analysis

Because the accident airplane was partially consumed by a postcrash fire, some of the wreckage evidence was not recoverable. As a result, the Safety Board used FDR data from the accident flight and a model of the airplane's takeoff ground roll dynamics to calculate the airplane's actual weight.

The accident airplane's weight during takeoff was calculated by evaluating the forces and moments on the airplane during the takeoff ground roll. Engine, groundspeed, and downrange distance data provided by Raytheon Aircraft Company for three Beech 1900D flight test takeoffs were used to validate this approach. As shown in table 4, the Safety Board's force and moment model predicted the actual flight test airplane weights within about ±200 pounds for groundspeeds between the 70- and 100-knot range.

Table 4. Validation of takeoff ground roll model.

Flight test identifier	Raytheon Aircraft Company flight test weight (pounds)	Safety Board calculated weight (pounds)	Difference (pounds)
1	17,300	17,510	+210
2	17,510	17,460	-50
3	13,860	14,010	+150

The accident flight's weight was subsequently derived using FDR data for the left and right engine rpm, right engine torque, altitude, airspeed, and corrected longitudinal acceleration.[69] Thrust was calculated using the FDR airspeed and the radar-derived groundspeed data. Because of the lack of reliable FDR data for left engine torque, FDR right engine torque data were used for both of the engines. The FDR left and right engine rpm values were averaged to define the propeller rpm.

On the basis of these FDR data, radar data, the validated force and moment model, and component weight and location information, the Safety Board determined that the accident airplane had an actual weight of 17,700 ±200 pounds and an actual CG position of 45.5 ±2 percent MAC. Figure 7 shows the results of the Board's calculations overlaid on the Beech 1900D weight and CG envelope.

[69] The FDR longitudinal acceleration was corrected with a bias term calculated to provide the best accelerometer integration match for altitude, groundspeed, and position.

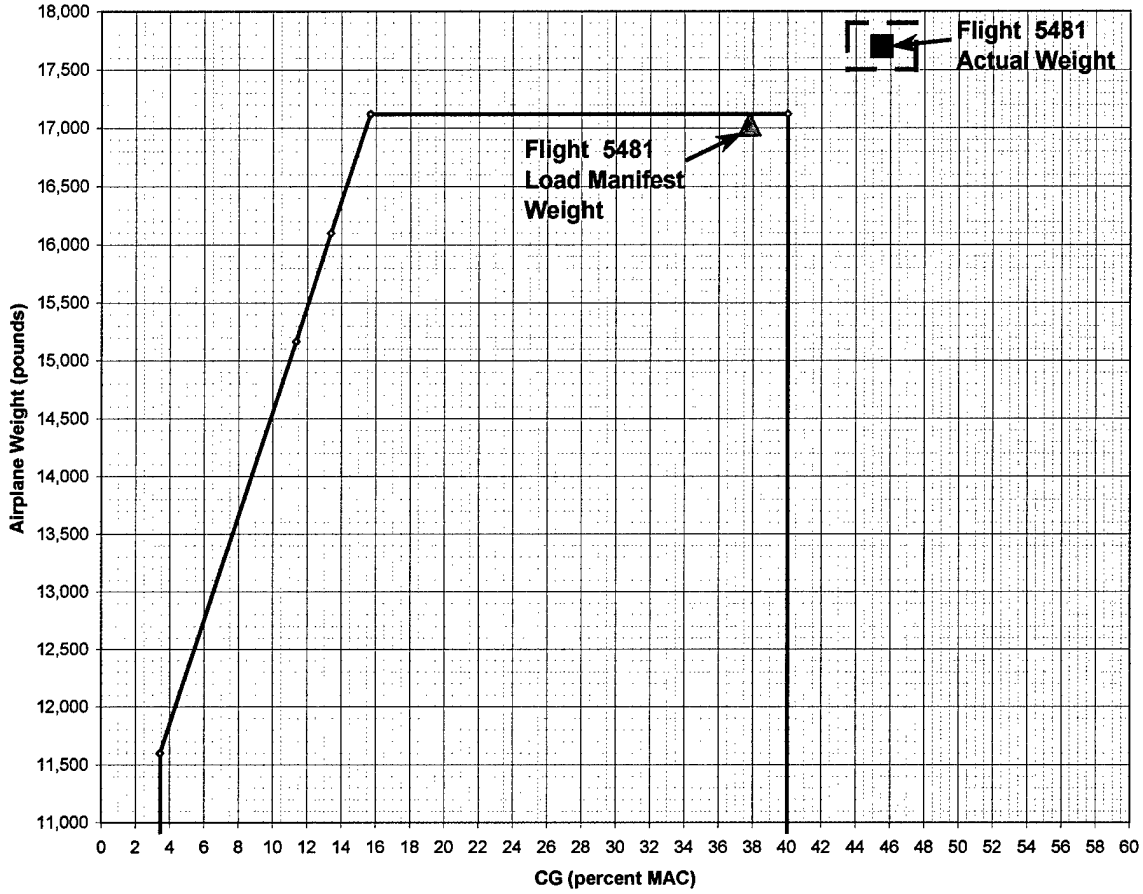

Figure 7. Weight and center of gravity information for flight 5481.

1.16.2.2 Load Manifest Study

The Safety Board reviewed load manifest data for 86 flights of the accident airplane that occurred between December 22, 2002, and January 8, 2003, and identified 9 flights that were documented to be similarly loaded to the accident flight. As shown in table 5, flight 5512 on December 27, 2002, was the most closely loaded to the accident flight. FDR data from flight 5512 were used (along with other data) to validate the Board's Beech 1900D simulator and kinematics extraction tool (see section 1.16.2.4).

Table 5. Flights documented to be similarly loaded to the accident flight.

Date	Flight number and route	Gross takeoff weight (pounds)	CG (percent MAC)[a]	Number of passengers	Cargo (pounds)
01-08-03	**5481/CLT-GSP**	**17,028[b]**	**37.8**	**19**	**820**
01-06-03	5515/GSP-CLT	16,393	34.2	19	595
01-02-03	5464/HTS-CLT	16,444	33.8	15	546
12-29-02	5464/HTS-CLT	16,883	35.4	19	670
12-29-02	5573/AHN-CLT	16,528	34.9	18	745
12-27-02	5464/HTS-CLT	16,893	35.7	18	770
12-27-02	5512/LYH-CLT	17,018	37.8	19	820
12-22-02	5576/CLT-HTS	16,598	33.0	15[c]	645
12-22-02	5464/CLT-HTS	17,019	32.7	17	656
12-22-02	5573/AHN-CLT	16,433	34.9	18	695

Note: The accident flight appears in bold face print.

[a] The CG indexes that correspond to these CG positions are 81, 70, 69, 74, 72, 75, 81, 67, 67, and 72, respectively.

[b] This figure includes the 10-pound addition error made by the flight crew on the load manifest form.

[c] One of the 15 passengers was a child between 2 and 12 years of age. In calculating the weight and balance of the airplane, the flight crew used the weight figure for children between 2 and 12 years of age for this passenger (80 pounds).

1.16.2.3 Elevator Control Authority Study

The Safety Board conducted an elevator control authority study based on data from the accident airplane's FDR to determine (1) the relationship between the FDR pitch control position and the actual elevator position and the change in that relationship before and after the D6 maintenance check and (2) the elevator travel that was available after maintenance. The results of the elevator control authority study are discussed in sections 1.16.2.3.1 and 1.16.2.3.2, respectively.

1.16.2.3.1 Relationship Between Pitch Control Position and Actual Elevator Position

The Safety Board analyzed the pitch control position and pitch trim control position data that were recorded during the climb and cruise portions of 84 flights available on the accident airplane's FDR.[70] The flight phase (climb or cruise) and the

[70] As indicated in section 1.16.2.2, the accident airplane made 86 flights between December 22, 2002, and January 8, 2003. FDR climb and cruise data with the airplane in a clean configuration (that is, gear up and flaps up) were available for 84 of those flights.

flight date (before or after the D6 maintenance check) were recorded for each FDR pitch control position and pitch trim control position data pair.

Raytheon Aircraft Company provided flight test certification data for elevator and elevator trim tab climb and cruise positions for various Beech 1900D weights and CG positions. These data were used to verify the absolute position of the accident airplane's elevator for a given FDR pitch control position and pitch trim control position pair.

The position of the trim tab is the predominant predictor of elevator position during climb and cruise flight. Figure 8 shows that a strong correlation exists between elevator (FDR pitch control position) and trim tab (FDR pitch trim control) data. The figure shows two distinct data groups: the larger group represents flights before the D6 maintenance check, and the smaller group represents flights after the D6 maintenance check.

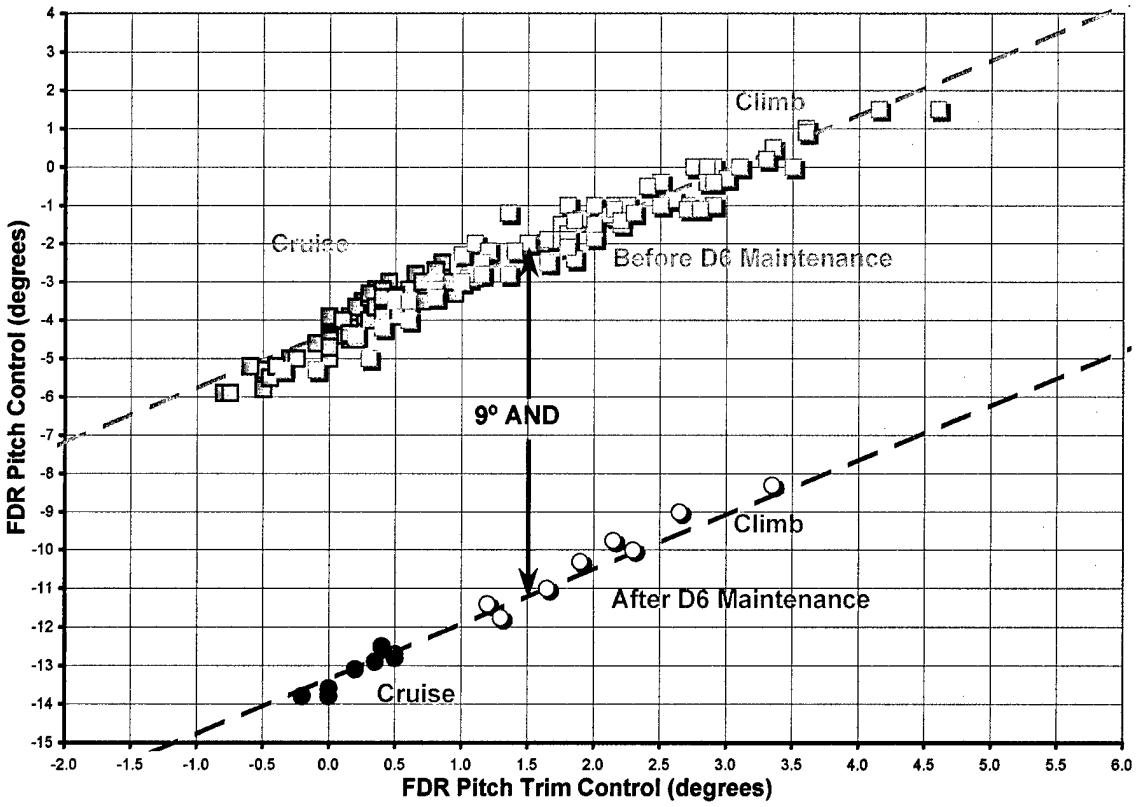

Figure 8. Flight data recorder pitch control and pitch trim control positions.

The larger group of data shown in figure 8 (that is, the flights before D6 maintenance) compared well with the Beech 1900D flight test certification data, indicating that the premaintenance FDR pitch control position data represented the actual elevator position to within about 1°. However, the smaller group of data (that is, the flights

after D6 maintenance) showed that, for a given pitch trim control position value, the postmaintenance pitch control position value was shifted about 9° AND compared with the premaintenance pitch control position value.

The flight conditions (that is, altitude, airspeed, weight, and CG) associated with the postmaintenance flights are similar to the flight conditions associated with the premaintenance flights. Thus, the actual elevator position as a function of trim tab position for all 84 flights was consistent, despite the 9° AND shift in indicated elevator position (FDR pitch control position) for the group of postmaintenance flights.

1.16.2.3.2 Available Elevator Travel

The Safety Board assumed that the D6 maintenance check did not affect the accident airplane's elevator hinge moment characteristics, the elevator trim tab hinge moment characteristics, or the relationship between the elevator trim tab and the elevator. With the use of these assumptions, FDR pitch control and pitch trim control data for the flights before the accident flight, and Raytheon Aircraft Company's flight test certification data (see section 1.16.2.3.1), the Board derived the accident airplane's actual elevator travel range for the accident flight.

The minimum and maximum FDR pitch control position values recorded during the preflight elevator control checks for the 10 flights that occurred after the D6 maintenance check defined the postmaintenance indicated elevator travel range. The actual elevator travel range was determined by plotting the postmaintenance indicated elevator position (FDR pitch control position) against the postmaintenance actual elevator position for the given FDR pitch trim control position. For example, as shown in figure 8, a postmaintenance FDR pitch trim control position of 0° corresponded to an indicated elevator position (FDR pitch control position) of about 13.5° AND and an actual elevator position of 4.5° AND.

Figure 9 shows flight 5481's indicated elevator position as a function of its actual elevator position. The maximum forward postmaintenance indicated elevator (FDR pitch control position) of 16.5° AND resulted in a maximum forward postmaintenance actual elevator position of about 7° AND. The maximum aft postmaintenance indicated elevator position of 15.1° ANU resulted in a maximum aft postmaintenance actual elevator position of about 21° ANU. The maximum forward premaintenance indicated elevator position of 15.6° AND resulted in a maximum forward premaintenance actual elevator position of 14.7° AND. The maximum aft premaintenance indicated elevator position of 20.1° ANU resulted in a maximum aft premaintenance actual elevator position of 21° ANU.

1.16.2.4 Beech 1900D Simulation Studies

The Safety Board requested and obtained Beech 1900D linearized aerodynamic, propulsion, and mechanical models from Raytheon Aircraft Company. The models and their supporting data were used to develop a Beech 1900D simulation capability and a complementary kinematics extraction tool. Simulation results were compared with flight test certification data provided by Raytheon Aircraft Company to validate the models and their implementation.

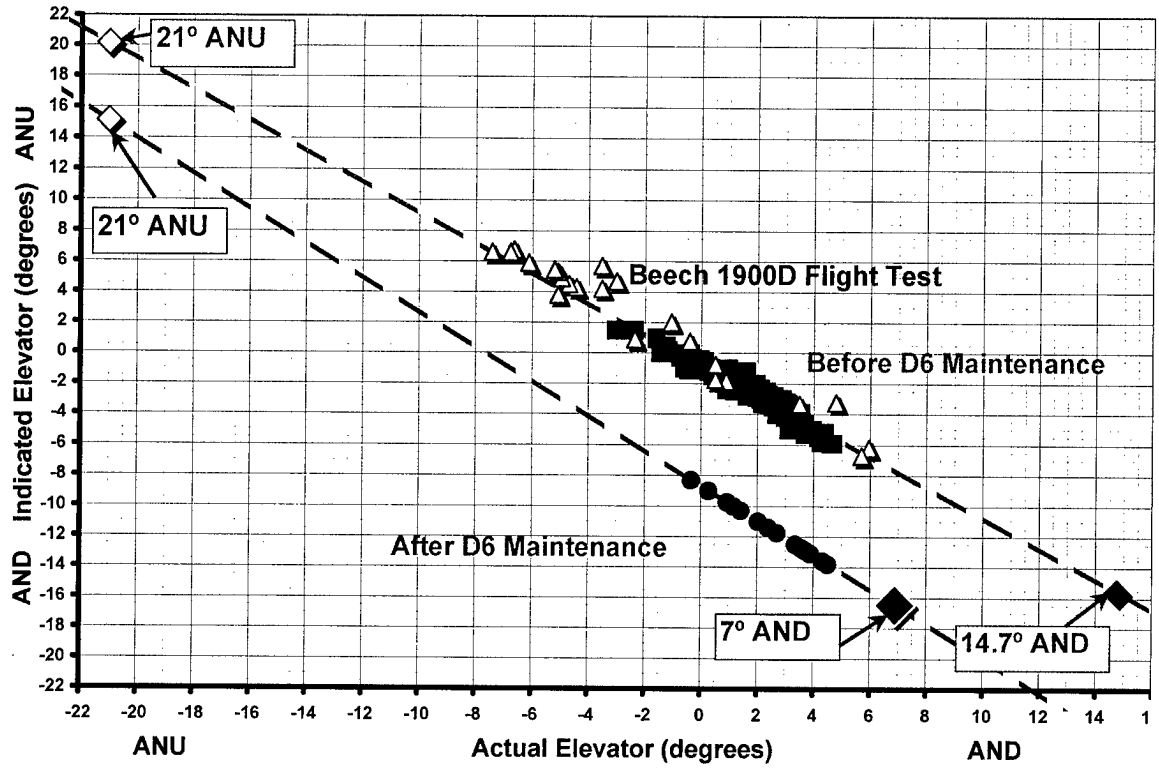

Figure 9. Elevator travel available before and after the detail six maintenance check.

The Safety Board's Beech 1900D simulator was subsequently used to derive the elevator required to (1) match the accident airplane's flight motion recorded on the FDR using the actual airplane weight and CG position and (2) establish controlled flight from an initial upset condition defined by the accident flight profile using the actual airplane weight and CG position. The results of the simulation studies are presented in sections 1.16.2.4.1 and 1.16.2.4.2, and the results of the kinematics extraction are presented in sections 1.16.2.4.3 and 1.16.2.4.4.

1.16.2.4.1 Elevator Required to Match Accident Flight Data

The Safety Board's simulator requires that the aircraft flight condition (altitude, airspeed, weight, and CG), the configuration (flaps and gear), the flight control inputs or control surface inputs, and engine data be specified.[71] The aerodynamic, propulsion, and mechanical models were used to compute the forces and moments acting on the airplane. The integration of the governing equations of motion yielded the resulting aircraft motion as a function of time.

[71] The flight control inputs are the control column, control wheel, rudder pedal, and their respective trim settings. The control surface inputs are the elevator, aileron, rudder, and their respective tab positions. The engine data consist of throttle, torque, and propeller rpm.

Unless otherwise noted, the accident flight simulations used an airplane weight of 17,700 pounds and a CG position of 45.5 percent MAC (based on the results of the Safety Board's weight and balance work). Simulator values for engine torque, propeller rpm, elevator trim tab, and flap position were defined by FDR data from the accident airplane. Elevator, control wheel, and rudder pedal positions were defined as a function of time to match the FDR altitude, airspeed, and attitude data.

Simulation results were compared with FDR and FDR-derived data for the portion of the flight from the takeoff ground roll to shortly before the sound of the stall warning horn recorded on the CVR (at 0847:10.8). The simulation indicated that the accident airplane's uncontrolled pitch maneuver could be reproduced with an elevator position that was limited to a constant value of about 8° AND.

1.16.2.4.2 Elevator Required to Establish Controlled Flight

The Safety Board evaluated the elevator required to establish controlled flight from an initial upset condition defined by the data from the accident airplane's FDR and CVR. FDR data indicated that, during the uncontrolled pitch maneuver, the flight crew was commanding AND inputs to stabilize the airplane's pitch attitude while maintaining the airplane's power (engine torque and propeller rpm) and trim tab and flap settings. These AND commands corresponded with the first officer's comment, "wuh," at 0847:02.1; the captain's comment, "oh," at 0847:02.2; and evidence that the landing gear had been completely stowed.

The Beech 1900D simulation indicated that the airplane required an elevator position of about 9.5° AND to recover from the initial upset and establish controlled flight at a nearly constant 15° pitch attitude.

1.16.2.4.3 Kinematics Extraction

The Safety Board's kinematics extraction tool requires that the aircraft motion (accelerations and attitudes), flight condition, and configuration be specified. The kinematics extraction tool then calculates the control or control surface inputs required to produce the specified aircraft motion. For the flight 5481 accident investigation, the kinematics extraction tool was used to calculate the elevator time histories for four flight segments flown by the accident airplane before the D6 maintenance check, two flight segments flown by the accident airplane after the D6 maintenance check, and the accident flight.

The extracted elevator time histories were compared with the elevator time histories recorded on the accident airplane's FDR. The kinematics extraction results showed that the airplane's premaintenance pitch control position matched the extracted elevator time history within about 1° for a range of airplane weights and CG positions, as previously confirmed by Raytheon Aircraft Company's flight test certification data (see section 1.16.2.3.1). The results also confirmed that the postmaintenance pitch control position was offset from the actual elevator position by about 9° AND. Moreover, an actual elevator position of 6° to 6.5° AND was required for the postmaintenance flight before the accident flight that was the most heavily loaded and had the most aft CG position.

The kinematics extraction for the accident flight determined the flight control deflections required to produce the airplane motion recorded on the FDR. As with the results of the simulation, about 8° of AND elevator was required to reproduce the motion recorded during the airplane's uncontrolled pitch maneuver.

The accident airplane's motion during takeoff was input into the Safety Board's kinematics extraction tool to calculate the elevator sensitivity to CG position for a fixed airplane weight of 17,700 pounds and CG positions of 43.5, 45.5, and 47.5 percent MAC. The calculation showed that elevator positions of about 7°, 8°, and 9° AND were required to reproduce the uncontrolled pitch maneuver for CG positions of 43.5, 45.5, and 47.5 percent MAC, respectively. A 2-percent CG shift in this range required slightly less than 1° of elevator to trim.

The kinematics extraction tool was then used to calculate the elevator sensitivity to the accident airplane's weight for a fixed CG position of 45.5 percent MAC and weights of 17,500, 17,700, and 17,900 pounds. This calculation verified that the weight magnitude had little to no effect on the elevator required to reproduce the accident airplane's uncontrolled pitch maneuver.

1.16.2.4.4 Simulator Trims

The simulation was also used to calculate the Beech 1900D speed stability for the following conditions: (1) trimmed power for level, free air flight; flaps 17.5°; and gear deployed; (2) reduced takeoff power, flaps 17.5°, gear deployed, and free air flight (to determine the effects of power); (3) reduced takeoff power, flaps 17.5°, gear stowed, and free air flight (to determine the effects of landing gear position); and (4) reduced takeoff power, flaps 17.5°, gear stowed, full trim tab AND, and free air flight (to determine the effects of trim tab position).

Condition number 4 simulated the accident airplane's configuration during the uncontrolled pitch maneuver. The Safety Board determined that elevator positions of between 7.5° and 8.5° AND were required to match the airplane's motion and that elevator positions of between 9° and 10° AND were required to trim the airplane.

1.17 Organizational and Management Information

1.17.1 Air Midwest

Air Midwest, Inc., is a domestic Part 121 air carrier based in Wichita. The company was founded in May 1965 and became a wholly owned subsidiary of Mesa Air Group,[72] which is based in Phoenix, Arizona, in 1991. At the time of the accident, the airline had 743 employees and 43 Beech 1900D 19-seat airplanes (including the accident airplane). The airline operated its fleet under code-share agreements with US Airways Express, America West Express, Mesa Airlines, and Midwest Express (now known as Midwest Airlines), with 389 daily departures to 72 destinations.

Air Midwest conducted its maintenance program according to guidance in three company manuals: Manual 210, Maintenance Procedures Manual; Manual 240, Maintenance Training Manual; and Manual 260, Maintenance Program Manual.[73] Mechanics working on Air Midwest airplanes at the contract maintenance stations (HTS; Dubois, Pennsylvania; Farmington, New Mexico; Little Rock, Arkansas; and Panama City, Florida) were required to be familiar with the policies and procedures in these manuals.[74]

Although Air Midwest's maintenance work was distributed among regional maintenance stations and was performed exclusively by contracted maintenance personnel, the air carrier remained responsible for the airworthiness of its airplanes and all of the maintenance performed. Specifically, 14 CFR 121.363 states that an air carrier is responsible for ensuring the airworthiness of the aircraft it operates and that an air carrier is not relieved of this responsibility when maintenance is contracted to another party. Also, AC 120-16D, "Continuous Airworthiness Maintenance Programs," states the following:[75]

---

[72] According to a July 11, 2002, press release posted on the Mesa Air Group Web site (http://www.mesa-air.com), Mesa Air Group was awarded a contract by the Department of Transportation in July 2002 for seven new essential air service markets in Arkansas, Oklahoma, and Texas. (The essential air service program ensured that, after the Airline Deregulation Act was enacted in 1978, smaller communities would retain a link to the national air transportation system.) The new markets include Enid and Ponca City, Oklahoma; Brownwood, Texas; and Harrison, Hot Springs, El Dorado/Camden, and Jonesboro, Arkansas. According to the press release, the air service was to be provided beginning in the fall of 2002 by Air Midwest operating as Mesa Airlines, and four Beech 1900D airplanes were dedicated to the new routes. Also, Mesa Air Group would receive a federally guaranteed subsidy of $13.4 million for providing this air service during the 2-year term of the contract.

[73] Title 14 CFR 121.367(a) states that aircraft maintenance, preventive maintenance, and alterations are to be performed in accordance with operators' maintenance manuals. Title 14 CFR 121.369(b) states that operators' maintenance manuals must describe the method to be followed in performing routine and nonroutine maintenance, preventive maintenance, and alterations and the method to be followed in performing RII inspections. Title 14 CFR 25.1529 requires manufacturers to prepare "Instructions for Continued Airworthiness" for operators of transport-category airplanes. Appendix H of Part 25 contains these instructions, which often become the basis for the operators' maintenance manuals required by Section 121.369.

[74] Air carriers are required by 14 CFR 121.367(b) to ensure the competence of their maintenance personnel for the proper performance of maintenance, preventive maintenance, and alterations.

[75] Additional information about AC 120-16D appears in section 1.17.4.1.

> As an air carrier, you are responsible for the maintenance of your aircraft. Under FAA's regulations, you must perform and/or approve all maintenance alterations on your aircraft. You may arrange for a maintenance provider, such as a repair station, to perform your maintenance for you. However, you retain responsibility for the performance and approval of that maintenance even if someone else performs the work for you....The air carrier also has the option to authorize another person to perform the maintenance, but the maintenance must be carried out in accordance with the air carrier's maintenance program and maintenance manual. The air carrier still retains the responsibility for the proper accomplishment of the maintenance.

According to the Air Midwest regional site manager at HTS, the regional site manager at each contract maintenance station is responsible for quality control functions. These functions include reviewing all maintenance and engineering paperwork to ensure that it meets Air Midwest standards. This paperwork is forwarded to company headquarters on Mondays, Wednesdays, and Fridays. The regional site managers are also responsible for performing station and fuel audits to ensure that the contractors adhere to Air Midwest standards. In addition, the regional site managers conduct indoctrination training. (See section 1.17.1.1 for more information about Air Midwest's maintenance training program.) The regional site managers report to the Air Midwest Chief Inspector/Director of Quality Assurance.

As indicated in section 1.5.3.5, the Air Midwest regional site manager at HTS worked the day shift at the time of the accident. His tasks included receiving verbal briefings from the foreman regarding the previous night's assignments; taking part in 0900, 0930, and 1600 maintenance calls with the other regional site managers and upper-level managers from Air Midwest and RALLC; and reviewing maintenance paperwork and OJT records for quality and accuracy. He stated that he did not typically have direct contact with mechanics except when he was providing training or was correcting problems with paperwork. The Air Midwest regional site manager stated that he had "no authority over anybody." For example, if he had a problem with the mechanics or their paperwork, he would have to notify the RALLC site manager, who then would raise the issue with the mechanic and take appropriate action.

There is no backup for the Air Midwest regional site manager position at HTS. If the regional site manager is not there for an extended period, Air Midwest either sends a regional site manager from another station to cover the HTS site manager's duties or the paperwork that is normally reviewed at HTS by the site manager and sent to Wichita every Monday, Wednesday, and Friday is sent directly to Wichita for review instead.

1.17.1.1 Air Midwest Maintenance Training Program

Air Midwest is responsible for conducting its maintenance training program in accordance with 14 CFR 121.375, which requires airline maintenance training programs to "ensure that each person (including inspection personnel) who determines the adequacy of work done is fully informed about procedures and techniques and new equipment in use and is competent to perform his duties." The Vice President/Director of Maintenance and

the Chief Inspector/Director of Quality Assurance are both responsible for ensuring that all required training is performed. The Maintenance Training Coordinator ensures that training records are properly retained, develops training and testing programs, oversees indoctrination training, and ensures that OJT is completed and recorded in a timely manner.

As stated in section 1.17.1, the Air Midwest regional site manager at each of the contract maintenance stations is responsible for conducting indoctrination training for all employees, including contractors. The training, which lasts 4 hours, is presented to employees before they begin work for Air Midwest. The purpose of the training is to familiarize the employees with Air Midwest's paperwork, tooling, equipment, safety policies, and training practices. The employees take a written, 50-question, open-book test at the end of the training session; a grade of 70 percent is a passing score. Quality assurance inspectors, foremen, and mechanics are required to take the test each year to make sure that they have retained the information that was taught during indoctrination training. The regional site manager forwards indoctrination training records to the Maintenance Training Coordinator.

Air Midwest does not provide Beech 1900D familiarization classroom training. All airplane-specific training is learned through OJT.[76] According to Air Midwest's Maintenance Training Manual,

> OJT will be used to learn and demonstrate knowledge and practical skills of normal job related duties. OJT training will be performed under the guidance of a qualified technician or staff member. The OJT will use practical situations found everyday [sic] on the job. The person providing the training shall have documentation of previously completed OJT training.

1.17.1.2 Huntington Maintenance Station Operations

Air Midwest opened the HTS maintenance station in July 2002 after the airline took over routes previously operated by CC Air, which was owned by the Mesa Air Group. Figure 10 shows the organizational structure of Air Midwest's HTS maintenance station operations.

[76] According to training records for HTS maintenance personnel, only one of the quality assurance inspectors had received formal systems training before his employment with RALLC.

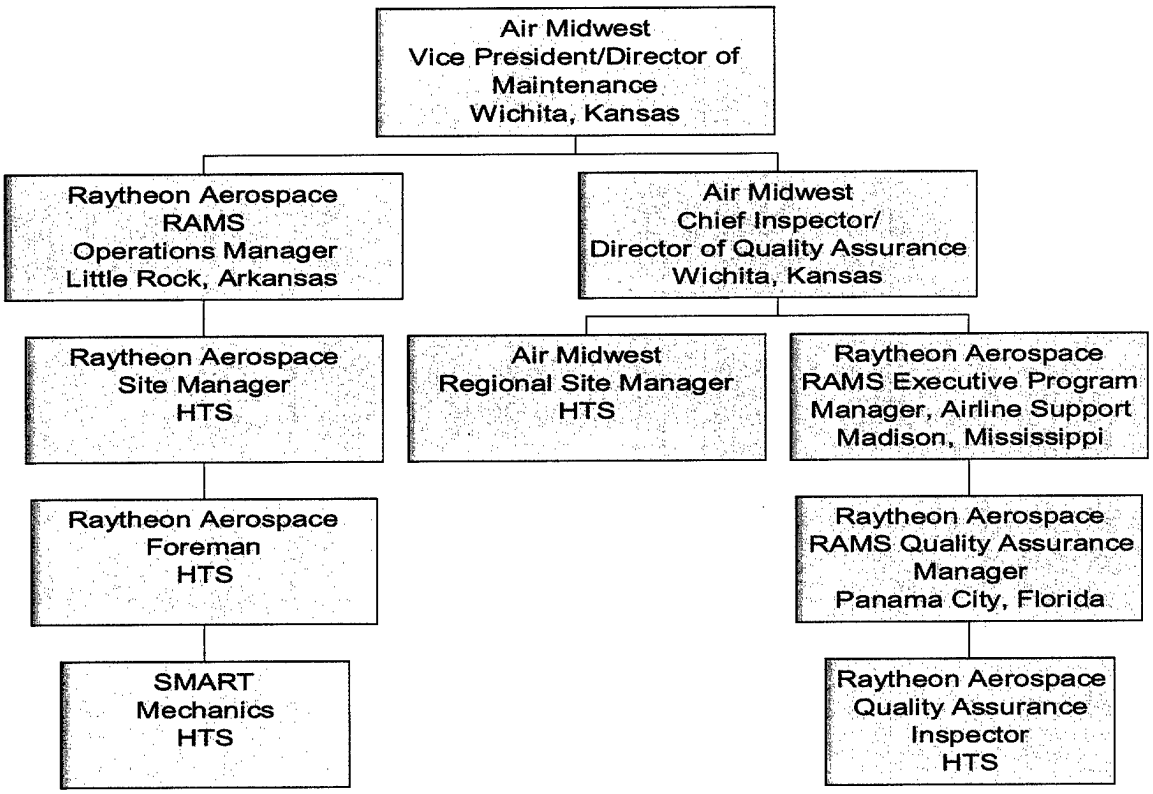

Note: RAMS, Regional Airline Maintenance Service.

Figure 10. Organizational structure of Air Midwest's Huntington, West Virginia, maintenance station operations.

During weekdays at HTS, the overnight shift started about 2200, an airplane arrived about 2230, and the shift ended about 0630. During weekends at HTS, the overnight shift started about 1800; an airplane arrived about 1830; and the shift ended between about 0200 and 0400, depending on the workload. Between five and seven maintenance personnel normally worked the overnight shift. The maintenance personnel indicated that they would remain on duty until the work was completed and that they were not pressured to return an airplane to service.

The RALLC site manager stated that the workload at HTS was "fairly stable." He indicated that HTS was scheduled for one airplane per night and that a detail check would normally be scheduled only on 1 or 2 nights per week. The workload was managed according to Air Midwest maintenance control's 3-day forecast.

Seven maintenance personnel (a quality assurance inspector, a foreman, and five mechanics) were on duty when the accident airplane received its D6 maintenance check on January 6, 2003. The quality assurance inspector and the foreman had been employed at HTS since it opened in July 2002. The five mechanics had been employed at HTS between 2 and 7 weeks. The quality assurance inspector and the foreman had completed

training for the D6 maintenance check, but the five mechanics had not completed the training.

The Air Midwest regional site manager stated that HTS had experienced a high turnover of its mechanic workforce. The RALLC site manager at HTS estimated that the average tenure for SMART employees was about 3 months. Both site managers indicated that the turnover occurred because mechanics received better contracts, wanted to work closer to their home, or wanted to work in another part of the country. The RALLC site manager did not think that there was any difference in the attitude, tenacity, skills, or competency between RALLC and SMART employees but thought that RALLC employees might have a greater level of commitment to the company. The Air Midwest regional site manager also did not think that there was any difference between RALLC and SMART employees, except that SMART personnel "come in for a couple months and leave."

1.17.1.3 Air Midwest Audits of the Huntington Maintenance Station

On November 5, 2002, an Air Midwest auditor from Wichita conducted an audit of the HTS maintenance station using the Air Midwest maintenance station audit guide checklist. One item on the checklist was to determine whether proper training was being provided for new hires, training records were being kept up to date, and proper recurrent training was being provided. The auditor found that those areas were satisfactory. The auditor also determined that overall staffing was not sufficient. Specifically, the auditor indicated on the checklist that HTS had only one foreman and one quality assurance inspector but should have two foremen and two inspectors.

A letter from Air Midwest's quality assurance auditor, dated November 21, 2002, to the RALLC site manager detailed the audit findings and indicated that HTS had 30 days to respond to the findings. The letter also stated that the quality assurance auditor needed to know, in writing, when resolution of the findings was complete. In a January 3, 2003, letter to the quality assurance auditor, the RALLC site manager indicated that HTS had increased its maintenance staff by 20 percent in the last month. At the public hearing on this accident, the RALLC site manager indicated that two mechanics had been hired but that an inspector and a foreman had not been hired.

On January 14, 2003, an Air Midwest auditor from Wichita conducted another audit of the HTS maintenance station. The auditor had concerns about whether proper training was being provided for new hires and training records were kept up to date, whether the shift overlap was adequate and verbal turnovers were used properly, and whether sufficient staff existed for each shift. The auditor determined that maintenance manual revisions were not complete and that foremen were not ensuring that training forms were properly stamped by instructors.

A letter from Air Midwest's quality assurance auditor, dated January 17, 2003, to the Air Midwest regional site manager detailed the audit findings and indicated that HTS had 30 days to respond to the findings. In a February 20, 2003, letter to the quality assurance

auditor, the Air Midwest regional site manager responded to the audit findings. The letter stated that the following corrective actions had been accomplished:

- All of the items on the mechanics' OJT training that were signed off by the mechanic but not the instructor had been corrected. The Air Midwest regional site manager indicated that he explained to the mechanics that, when they sign for something in their OJT records, the instructor has to sign at the same time.
- The RALLC site manager comes to work for a verbal turnover before the foreman leaves. The foreman also provides a daily written turnover.
- RALLC was hiring more people so that the total number of maintenance personnel at HTS would increase from 9 to 11.
- The Air Midwest regional site manager verified that all manual revisions that HTS received were added to the maintenance manuals and were properly documented. He also ensured that all manuals were up to date.

1.17.1.4 Postaccident Actions

In February 2003, Air Midwest reassigned the HTS regional site manager to work the night shift so that his work schedule would be aligned with those of the RALLC and SMART maintenance personnel. (The regional site managers at the other Air Midwest maintenance stations were also reassigned to work the night shift.) The regional site manager stated that the change in shift allowed him to be present at HTS when work was being performed but prevented him from participating in the maintenance calls. (The RALLC site manager still worked the day shift; thus, his work schedule still did not align with the overnight shift of the regional site manager, quality assurance inspector, foreman, and mechanics.)

Air Midwest removed the quality assurance inspector's authorization to perform maintenance and RII inspections on company airplanes. The quality assurance inspector is still employed by RALLC but is working as a mechanic at the Dubois maintenance station. Air Midwest also removed the mechanic's authorization to perform maintenance on company airplanes. The mechanic no longer works for SMART. The RALLC site manager is still employed by RALLC but now works as a mechanic at the Panama City maintenance station. In addition, Air Midwest gave disciplinary time off to another SMART mechanic and the primary quality assurance inspector at HTS because they falsely indicated on the mechanic's OJT record that he had completed training on the D6 aft fuselage/empennage inspection procedure on January 6, 2003. (The primary quality assurance inspector was not on duty on the night of January 6th. The mechanic inspected and checked the engines but did not perform the entire D6 maintenance procedure, including the elevator check.) The mechanic and primary quality assurance inspector were subsequently retrained and then reinstated to their former positions.

In a February 12, 2003, letter to the Safety Board, the Air Midwest Vice President/Director of Maintenance expressed the air carrier's concerns regarding the manufacturer's elevator control system rigging procedure. The letter stated, "a review of the Raytheon Aircraft Beech 1900D Maintenance Manual revealed a lack of explicit

instructions, which if included, could have avoided the elevator mis-rigging." The letter detailed numerous deficiencies in the rigging procedure that were identified by Air Midwest.

On July 18, 2003, Air Midwest revised its D6 work card. The revised work card included the following steps for performing an elevator cable tension check and blocks beside each step for the mechanic's and quality assurance inspector's stamps:

> Let aircraft temperature stabilize for three hours.
>
> Take the temperature reading with the aircraft OAT temperature gauge.
>
> Gain access to the elevator...cables under the cargo compartment floorboard.
>
> Using a calibrated tensiometer with the proper riser installed, take the elevator cable tension readings I.A.W. [in accordance with] Raytheon Maintenance Manual.
>
> Compare readings from the aircraft to the proper cable tension charts in the Beech Maintenance Manual. (For the elevator tension chart, ref. *Raytheon [Maintenance] Manual Chapter 27-30-02, fig 203....)
>
> If cable tensions are within tolerance, no adjustment to the cable tension is required.
>
> If tensions are not within tolerance of the tension chart, perform the complete elevator...control system rigging procedure. (For elevator rigging, ref. *Raytheon [Maintenance] Manual 27-30-02....) "N/A" [not applicable] this block if no adjustments were made.
>
> List all work performed on the AMR [aircraft maintenance record of nonroutine items], if adjustments were made. "N/A" this block if no adjustments were made.

Air Midwest also revised its weight and balance procedures. These revisions are presented in section 1.18.1.2.1 after a discussion of the procedures that were in effect at the time of the accident (section 1.18.1.2).

1.17.2 Raytheon Aerospace

RALLC is headquartered in Madison, Mississippi. At the time of the accident, RALLC provided one site manager, two quality assurance inspectors (one of whom was designated as the primary quality assurance inspector and the other of whom was designated as the foreman), and seven SMART A&P-certified mechanics to Air Midwest's HTS maintenance station.

Air Midwest paid RALLC for its services. RALLC paid salaries and benefits for its employees. RALLC also paid SMART for its maintenance personnel, but SMART employees received their salaries and benefits directly from SMART.

The RALLC site manager stated that he reported to the RAMS operations manager in Little Rock, who reported to the Air Midwest Vice President/Director of Maintenance in Wichita.[77] The primary quality assurance inspector reported to the RAMS quality assurance manager in Panama City, Florida.[78] The foreman reported to the RALLC site manager. According to public hearing testimony, the SMART mechanics reported to a SMART manager through an HTS on-site coordinator (one of the mechanics).

The RALLC site manager was responsible for the daily operations at the HTS maintenance station and the work performed there. The foreman assigned maintenance work and followed the progress of the mechanics in accomplishing the work, and the quality assurance inspector checked the RIIs.[79] As previously stated, when the primary quality assurance inspector was not at work (as on the night of January 6, 2003), the foreman would assume his duties. A SMART mechanic would then assume the foreman's duties.[80]

The foreman was responsible for providing OJT to the mechanics and for signing off their OJT records. The quality assurance inspector who was not on duty on the night of January 6, 2003, stated, in a postaccident interview, that the quality assurance inspector who was on duty should not have been providing OJT.[81]

The RALLC site manager did not personally oversee the work performed by the mechanics because he worked the day shift. As a result, the site manager depended "very heavily" on the quality assurance inspector and the foreman for information about the mechanics' work. In addition, the site manager indicated that, even though he was the maintenance administrator, he performed employee job performance reviews for the quality assurance inspectors. The site manager further stated that the RAMS quality assurance manager performed the part of the performance review covering quality assurance issues.

[77] The Air Midwest Maintenance Procedures Manual indicated that the RALLC site manager reported directly to the Air Midwest Vice President/Director of Maintenance.

[78] The RAMS quality assurance manager reported to the RAMS Executive Program Manager for Airline Support in Madison, Mississippi, who reported to the Air Midwest Chief Inspector/Director of Quality Assurance in Wichita.

[79] Title 14 CFR 121.365(c) states, "each person performing required inspections in addition to other maintenance, preventive maintenance, or alterations, shall organize the performance of those functions so as to separate the required inspection functions from the other maintenance, preventive maintenance, or alteration functions." In addition, AC 120-16D states, "a primary concept of the RII function is that the person performing the work may not perform the required inspection of that item of work."

[80] On the basis of the work schedule in effect at the time of the accident, a SMART mechanic acted as the foreman 4 nights per week.

[81] Air Midwest Maintenance Procedures Manual stated that the foreman's duties include performing and documenting OJT on aircraft maintenance practices, company policies, and safety procedures, as required. The manual did not include these duties as part of the quality assurance inspector's job description.

1.17.2.1 Contract Between Raytheon Aerospace and Air Midwest

The contract between RALLC and Air Midwest was a 60-month agreement that became effective on January 1, 2003.[82] The contract contained 29 statements of understanding and 3 appendixes that detailed the conditions of the agreement.

The contract stated that RALLC would provide a manager, foremen, mechanics, and inspectors to Air Midwest to meet its maintenance requirements and that RALLC would confer with Air Midwest before any changes were made to the number of personnel provided. No language in the contract prevented RALLC from contracting with another party for maintenance personnel.

The contract stated that scheduled maintenance and unscheduled on-call maintenance would be performed according to the procedures in Air Midwest's maintenance manuals and that all maintenance actions, parts, and documentation would meet *Federal Aviation Regulations* (FARs) and Air Midwest requirements. The contract further stated that RALLC would work toward achieving a 99-percent reliability rate for scheduled maintenance.

According to the contract, Air Midwest would supply all parts, materials, and equipment and would be responsible for technical data management, quality control/quality assurance inspection, a technical library, and a tracking system for time-compliance and hard-time items.

The contract specified the allocation of cost at each of the Air Midwest maintenance stations. According to the contract, Air Midwest was solely responsible for the hangar facility at HTS.

1.17.3 Structural Modification and Repair Technicians

SMART, which is headquartered in Edgewater, Florida, recruits maintenance personnel for its aviation industry clients. SMART accepts résumés through recruiters or on its Web site and then qualifies applicants by conducting a 5-year background check, a 10-year security check,[83] and drug testing. SMART mechanics indicated that the company does not interview applicants in person to determine their experience level, but public hearing testimony by SMART's Director of Recruiting indicated that the company conducts telephone interviews to make such determinations.

Applicants that pass the reference checks and the drug testing are hired as SMART employees. They bid on open job postings for placement with an aviation industry client. SMART employees work for SMART and not the aviation industry client. SMART does not oversee, evaluate, or direct its employees at the client's work site.

---

[82] The contract between RALLC and Air Midwest was originally negotiated in September 2001 and was renegotiated in September 2002.

[83] SMART employees that were hired before September 11, 2001, were subject to a 5-year security check.

1.17.3.1 Contract Between Structural Modification and Repair Technicians and Raytheon Aerospace

The contract between SMART and RALLC was signed on March 25, 2002. The contract contained 22 agreement statements that identified the conditions in which the two companies would work together.

The contract stated that SMART would provide aircraft maintenance personnel to perform services at locations designated by RALLC but that the personnel would not be considered employees of RALLC. The contract also stated that SMART was responsible for all matters concerning the maintenance personnel's working conditions, termination, working hours, vacation and other leave, expenses, wages, and worker's compensation insurance. The contract further stated that SMART was responsible for instructing their employees to follow RALLC policies and regulations as long as they were communicated in writing in a timely manner.

The contract stated that SMART would use its sole discretion in deciding which maintenance personnel would be provided to RALLC.[84] The contract also stated that RALLC was solely responsible for supervising the work of SMART employees and that RALLC would provide each SMART employee with a daily time card and would approve the time cards. In addition, the contract specified that the use of any SMART employee could be terminated at any time by RALLC[85] and that, if the employee's performance in the first 8 hours of work was not satisfactory, SMART would not charge for the employee's services.

1.17.4 Federal Aviation Administration Oversight

The Air Midwest principal operations inspector (POI) has been in that position since October 1999. The Air Midwest certificate is the only one he oversees. Two assistant POIs and one aircrew program manager help the POI with his oversight duties. The POI's office (the Wichita Flight Standards District Office [FSDO]) is located about 3 miles from Air Midwest's office.

The POI indicated that he reviewed Air Midwest's Flight Operations Procedures Manual and training program. He stated that oversight of Air Midwest's weight and balance procedures was accomplished during en route inspections. The POI indicated that an en route inspector or geographic inspector would check the cargo bin, count the number of bags, and look at the size of the bags and then compare the findings to the information documented on the load manifest form. The inspector would also examine the weight scales at the stations.

[84] The RALLC site manager indicated that he reviewed the résumés of the SMART employees that worked at the HTS maintenance station before they were hired by SMART.

[85] Although RALLC has the right to terminate a SMART employee, RALLC must depend on SMART to carry out the termination.

The Air Midwest principal maintenance inspector (PMI) began work for the FAA in 1988 and has been in his current position, which is based in Wichita, since December 1998. The Air Midwest certificate is the only one the PMI oversees. Two assistants help the PMI carry out his responsibilities. During postaccident interviews, the PMI stated that he had 40 years of aviation-related experience, including 30 years as an A&P mechanic and 25 years as a maintenance inspector.

The PMI stated that he tried to visit all of the Air Midwest maintenance stations two to three times per year for at least 3 days each time. The PMI stated that he rarely announced his inspections of Air Midwest's maintenance stations. The PMI stated that he usually took a morning flight to a maintenance station, visited the station after arriving, and met with the maintenance managers to discuss any of their concerns. The PMI also stated that he would return to the station at night to observe maintenance operations.

The PMI visited the HTS maintenance station before it opened in July 2002. The PMI also visited HTS in September 2002. According to postaccident interviews, the PMI spoke with the quality assurance inspector and the foreman but did not speak with the mechanics. Also, the RALLC site manager and the Air Midwest regional site manager stated that the PMI reviewed training records and other documentation and observed maintenance operations during the overnight shift. The RALLC site manager further stated that the PMI told him that the mechanics "seemed very competent."[86] In a postaccident interview, the PMI stated that, before the accident, he was unaware that third-party maintenance contractors were being used at HTS.

During public hearing testimony, the PMI stated that he would not readily find problems concerning OJT at the maintenance stations and that the only way he would discover such a problem would be to "work some kind of a spreadsheet where [he] could correlate whoever signed it [the OJT] off on the job card versus the training folder," which was "a little bit of work." The PMI did state his concern that HTS personnel did not follow the Air Midwest maintenance manual while conducting OJT.

In addition, the RALLC site manager and the Air Midwest regional site manager stated that flight standards inspectors from the Charleston, West Virginia, FSDO had visited HTS once for an informal introduction and that the visit was not an inspection of the facility. The Air Midwest regional site manager further stated that airworthiness inspectors from the Charleston FSDO visited HTS once while he and the RALLC site manager were at lunch.

Finally, in addition to the POI and PMI, a principal avionics inspector (PAI) was assigned to the Air Midwest certificate. The PAI, who was based in Wichita, reviewed all of Air Midwest's maintenance training manual submissions. The PMI stated, in a January 2004 interview, that the PAI had worked as a maintenance inspector before becoming an avionics inspector and that he understood both areas very well.

[86] The RALLC site manager also stated that, about the time of the PMI's visit, HTS "had people training us from other sites on a regular basis and so we had two guys that were really knowledgeable, plus the staff that we normally had."

1.17.4.1 Continuing Analysis and Surveillance System

In 1964, the FAA introduced the requirement for air carriers to have a Continuing Analysis and Surveillance System (CASS) because maintenance program ineffectiveness had been identified as a primary causal factor in some maintenance-related air carrier accidents. Specifically, 14 CFR 121.373, "Continuing Analysis and Surveillance," required air carriers to

> establish and maintain a system for the continuing analysis and surveillance of the performance and effectiveness of its inspection program and the program covering other maintenance, preventive maintenance, and alterations and for the correction of any deficiency in those programs, regardless of whether those programs are carried out by the certificate holder or by another person.

Between August 1980 and March 2003, the primary CASS guidance available to air carriers was contained in AC 120-16C, "Continuing Airworthiness Maintenance Programs," and was less than 1 page in length. The guidance stated that a CASS program should be designed to monitor for, and provide timely corrective action in response to, decreases in mechanical reliability and should provide a continuous auditing function that examines a broad range of issues, including the currency and availability of publications, conformity between maintenance practices and company policies, adequacy of record-keeping and training, and handling of deferred maintenance items.

In March 2003, the FAA revised AC 120-16C. The revised AC (AC 120-16D) presented expanded CASS guidance in a dedicated chapter that was several pages in length. The guidance defined CASS as an "air carrier quality assurance system" designed to detect and correct air carrier maintenance program deficiencies through a closed-loop, continuous cycle of surveillance and investigations, data collection and analysis, corrective actions, and monitoring and feedback. The guidance stated that an air carrier's CASS program should monitor the following nine elements of the carrier's continuous airworthiness maintenance program: airworthiness responsibility, maintenance manual, maintenance organization, maintenance schedule, maintenance record-keeping system, accomplishment and approval of maintenance and alterations, contract maintenance, CASS, and personnel training.

The CASS guidance in AC 120-16D also stated that a CASS program should include "detailed policy and procedures" for determining whether an air carrier needed to amend its maintenance program or manual and for making amendments. In addition, the guidance stated that, "proactive surveillance and analysis forecasts faults in your [the air carrier's] maintenance program or manual through the collection and analysis of a wide variety of data. It corrects those faults, including human factors[87] issues, in advance of any specific event, accident, or incident." Further, the guidance stated that an air carrier's "CASS audit schedule should include...all manuals, publications, and forms [to ensure that they] are useable, current, accurate, and readily available to the user."

[87] The discipline of human factors identifies capabilities and limitations of humans and ways to adapt human and system components accordingly to increase efficiency, effectiveness, and safety.

In April 2003, the FAA published AC 120-79, "Developing and Implementing a Continuing Analysis Surveillance System," which was a comprehensive guide for the development of CASS programs.[88] The AC provided information on CASS-related topics, including the following: the desired purpose and structure of a CASS program, CASS policy and documentation, major CASS activities, CASS personnel requirements, communication between CASS personnel and other departments, comparison of CASS and other required maintenance programs, CASS program evaluation, and the role of the FAA in an air carrier's CASS program. The AC also described model CASS programs for air carriers in three different size ranges.

1.17.4.2 Correspondence From the Federal Aviation Administration to Air Midwest

In an October 16, 2000, letter, the Air Midwest PMI stated that a recent FAA inspection conducted at Air Midwest headquarters could not be completed because the air carrier lacked adequate records to determine whether it was in compliance with 14 CFR 121.371(a) and 121.375.[89] The PMI noted that, among other things, "required [maintenance] training records are either not at the Wichita facility or are not up to date and complete," and advised Air Midwest of the need to comply with 14 CFR 121.371(a) and 14 CFR 121.375. The PMI requested a meeting with Air Midwest officials to "avoid further investigation of these areas," and this meeting was held on October 26, 2000.

In a November 9, 2000, letter, the Air Midwest PMI stated that Air Midwest's CASS program did not include a reliable way of charting operational data at specified intervals to reveal trend-related information.

In a December 18, 2000, letter, the Air Midwest assistant PMI asked the air carrier to submit a strategy to resolve the inadequacy of the carrier's training manual and training records.[90] The Air Midwest Vice President/Director of Maintenance indicated that the air carrier would, by February 1, 2001, audit training records, rewrite its maintenance training manual, forward copies of training records to company headquarters, and add a manager to the training department.[91]

In a September 6, 2001, letter, the Air Midwest PAI stated that he was returning Air Midwest's April 1, 2001, revised maintenance training manual so that numerous

[88] AC 120-79 provided one method of compliance with the requirements of 14 CFR 121.373.

[89] Title 14 CFR 121.371(a) requires that carriers operating under 14 CFR Part 121 use only persons who are properly certificated, trained, qualified, and authorized for performing required inspections. See section 1.17.1.1 for a description of 14 CFR 121.375.

[90] A followup inspection of Air Midwest's training files was conducted on December 4, 2000. This inspection revealed evidence of continuing deficiencies in the training files as well as deficiencies in the air carrier's training manual. The PMI gave Air Midwest a deadline of February 1, 2001, to remedy these deficiencies.

[91] A Regional Aviation Safety Inspection Program (RASIP) inspection, conducted between March 12 and 29, 2001, found that deficiencies in the maintenance training manual still existed and that training was not being conducted in accordance with company procedures. The RASIP inspection also found that Air Midwest was not performing the biannual audits required by the company's CASS procedures.

changes could be made.[92] Air Midwest resubmitted its revised maintenance training manual on October 9, 2001, but, in a letter dated January 16, 2002, the PAI cited deficiencies in the manual, some of which had been previously identified, and asked Air Midwest to make the necessary corrections.

In a February 11, 2002, letter to the Air Midwest Vice President/Director of Maintenance, the Air Midwest PMI stated that he could still not determine whether Air Midwest was in compliance with the FARs and asked Air Midwest to develop and initiate a plan within 2 weeks to address maintenance training program deficiencies in need of immediate improvement or be subject to an in-depth audit. The Air Midwest Vice President/Director of Maintenance responded to this letter by notifying the PMI of actions the air carrier was taking to resolve some of his concerns and by stating that solutions to other problems would be implemented after the revised maintenance training manual was accepted by the FAA.

On February 11, 2002, Air Midwest submitted another revised maintenance training manual for the FAA's review. In a letter dated February 19, 2002, the PAI again cited deficiencies in the manual and asked Air Midwest again to make the necessary corrections. On February 28, 2002, the FAA accepted Air Midwest's revised maintenance training manual.

In the February 19, 2002, letter, the Air Midwest PAI also communicated his concern that Air Midwest's CASS program lacked an auditor training curriculum. In an April 26, 2002, letter, the Wichita FSDO manager and the Air Midwest PMI stated that Air Midwest had a written audit program but no dedicated program manager and that this and other issues needed to be resolved before Air Midwest would be allowed to change its route structure.[93] (The other issues involving Air Midwest included that its infrastructure had not kept up with its growth, its pilot training program had deficiencies, RASIP issues were unresolved, and procedures in its General Maintenance Manual were inadequate.) In an August 19, 2002, letter, the Air Midwest PMI cited deficiencies that Air Midwest needed to address before route structure changes could be approved, including actions to ensure that the audit procedures contained in the company's audit manual were being followed.

[92] Air Midwest's revised training manual and audit manual were submitted to the FAA for review about the same time. The FAA asked Air Midwest which manual should have priority, and it was decided that the audit manual would have priority. The audit manual was accepted by the FAA on December 19, 2001.

[93] The POI was the FAA official responsible for approving any proposed route expansion. His operations supervisor advised him against delaying Air Midwest's proposed route changes (see section 1.17.1). In a January 2004 interview, the operations supervisor told the Safety Board that she could not recall the details of that conversation. She stated that she did recall that the FAA had sent Air Midwest letters of concern before a prior route expansion in Dallas, Texas, and that Air Midwest had consistently been willing to meet with the FAA to address its concerns, had made needed improvements in flight operations, and was essentially in compliance with the FARs. In a January 2004 interview, the PMI said that Air Midwest had been responsive in communicating with the FAA but that Air Midwest management did not always adequately follow through in resolving all of his concerns, including the need for aircraft familiarization training and better supervision of OJT.

1.17.5 Raytheon Aircraft Company

On December 10, 2003, the President of Raytheon Airline Aviation Services met with the Safety Board to discuss Beech 1900 series maintenance initiatives. According to the Raytheon official, these initiatives were undertaken to reinforce with operators the importance of properly maintaining Beech 1900 series airplanes. In a December 16, 2003, facsimile, the Raytheon official summarized the initiatives he discussed at the meeting. The facsimile included the following initiatives:

- communicating more actively with all levels of Beech 1900 operator personnel, including the chief executive officer/owner, Director of Maintenance, and mechanics;
- providing all Beech 1900 operators with a CD-ROM of all Beech 1900 safety and model communiqués and SBs;
- posting all Beech 1900 safety and model communiqués and SBs on the Raytheon Aircraft Company Web site;
- conducting Beech 1900 Airliner Operators Conferences, the first of which was held in Wichita on October 21 through 23, 2003, so that operators, suppliers, and Raytheon Airline Aviation Services have a forum to discuss maintenance issues;
- developing "easy-to-follow" text and illustrations to improve the explanation of certain procedures, including flight control rigging and functional testing; subjecting these procedures to "validation and verification;" and issuing changes to the procedures as temporary revisions to the Beech 1900 AMMs; and
- sending technical teams to Beech 1900 operators to provide on-site training for mechanics and launching a Web-based training site that will be accessible to all Beech 1900 mechanics.

1.18 Additional Information

1.18.1 Weight and Balance Procedures

1.18.1.1 Federal Aviation Administration

Air carriers are required to have procedures in place for the control of weight and balance of airplanes. Title 14 CFR 121.153 permits air carriers with more than nine passenger seats to use an approved average weight program instead of actual weights for aircraft weight and balance calculations. The use of average weights instead of actual weights allows air carriers to board passengers, load baggage and cargo, and calculate weight and balance more quickly. Air carriers can use actual weights, average weights established by survey data, or a combination of both to determine the weight of crewmembers, crew baggage, passengers and personal items, carry-on baggage, and checked baggage.[94]

The FAA published its aircraft weight and balance guidance in AC 121-5, "Aircraft Weight and Balance Control," in January 1965 and then in AC 120-27, "Aircraft Weight and Balance Control," in October 1968. The content in AC 120-27 was subsequently revised three times: AC 120-27A was issued in May 1980, AC 120-27B was issued in October 1990, and AC 120-27C was issued in November 1995 and was the version in effect at the time of the flight 5481 accident.[95] According to AC 120-27C,

> an operator may submit, for inclusion into its operations specifications, any method and procedure which shows that an aircraft will be properly loaded and will not exceed approved weight and balance limitations during operation. The approval of such a weight and balance control system is based on an evaluation of the program presented for a particular aircraft and of a particular operator's ability to implement that program.

The average weight suggested in AC 120-27C for an adult passenger was 180 pounds in the spring and summer months and 185 pounds in the fall and winter months; both weights included 20 pounds for carry-on baggage. The average weight suggested in the AC for checked baggage was at least 25 pounds. The AC warned that the standard average passenger weights presented were developed for a conventional airline passenger group and that the weights "cannot be arbitrarily adopted for operations with passenger groups that appreciably differ from the basis or where the mix of male and female passengers is known to be different than a 60 percent male/40 percent female operation."[96]

The guidance in AC 120-27C was not intended to address all possible air carrier weight and balance configurations. As a result, the AC noted that air carriers should consider conducting a reliable survey to establish average weights for their specific operations and providing the results of the survey to the FAA. An appendix in the AC listed procedures for conducting surveys and establishing average passenger and baggage weights based on statistical analyses. Also, the guidance in AC 120-27C advised air carriers that their weight and balance program should (1) account for all probable loading conditions that may be experienced in service, (2) ensure satisfactory loading within the aircraft weight and CG limits during ground and flight operations, (3) maintain the aircraft weight and CG limits, and (4) stress that the aircraft must be operated at or below its maximum certificated operating weight.

PMIs oversee and evaluate air carriers' weight and balance programs according to the guidance in FAA Order 8300.10, *Airworthiness Inspector's Handbook*. The guidance states that the use of average weights may be authorized as long as the weights are based

---

[94] Actual weights are required to be used for the aircraft empty weight, fuel, U.S. mail, and company material.

[95] Flight Standards Handbook Bulletin for Airworthiness 95-14 and Flight Standard Handbook Bulletin for Air Transportation 95-15, "Adherence to Advisory Circular 120-27C, 'Aircraft Weight and Balance Control,'" were issued in November 1995 and provided guidance to assist regional air carriers with limited carry-on baggage programs, such as Air Midwest, with the development of their weight and balance program.

[96] AC 120-27C stated that actual passenger weights were to be used for nonstandard weight groups (such as athletic teams) unless average weights had been established for such groups.

on acceptable data that were collected during actual operations (for example, by weighing passengers and baggage and documenting the weights). The order also states that the average passenger and baggage weights listed in AC 120-27C are not regulatory and do not constitute authorization as a method for controlling aircraft weight and balance. In addition, the order states that average passenger and baggage weights must be evaluated for applicability to individual air carriers. Regardless of the weight and balance program in place or the source of the data used to establish average weights, the air carrier is ultimately responsible for ensuring proper aircraft weight and CG loading before each flight is dispatched.

1.18.1.1.1 Postaccident Average Weight Survey

Because the flight 5481 accident raised concerns about aircraft loading and average weights used in weight and balance control programs, the FAA issued Notice 8400.40, "Weight and Balance Control Programs for 10 to 19 Seat Airplanes Operated Under 14 CFR 121," on January 27, 2003. The notice requested that all operators of 10- to 19-passenger seat airplanes operated under 14 CFR Part 121 conduct a survey to validate the average weights contained in their weight and balance program.[97] Of the 22 operators that have 10- to 19-passenger seat airplanes, 15 operators used average weight programs, and 7 operators used actual weight programs.

The survey was to be conducted during a 3-day period that included 2 heavier traveled days—Sunday and Monday—and 1 lighter traveled day—Tuesday. The survey was to include 30 percent of the operators' stations and was to sample 15 percent of the stations' flights.[98] In conducting the survey, the operators either asked the passengers their weight and added 10 pounds (for personal items) to the number reported or actually weighed the passengers. The operators also weighed all checked baggage and all carry-on baggage that were checked at the airplane. Table 6 shows the results of the survey by operator, and table 7 shows the overall survey results.

[97] Another purpose of the notice was for operators to determine the condition of cargo restraint systems, such as tie-down rings, locking devices, and cargo nets.

[98] Air Midwest indicated that it surveyed 100 percent of its flights during the 3-day period (540 flights) at 98 percent of its stations.

Table 6. Federal Aviation Administration Notice 8400.40 survey results by operator.

Operator	Average adult weight (pounds)	Number of adults in sample	Average carry-on baggage weight (pounds)	Number of carry-on bags in sample	Average checked baggage weight (pounds)	Number of checked bags in sample
A	200.00	3,018	20.00	1,538	30	2,510
B	177.86	148	*	*	24	211
C	192.60	326	11.03	297	29.88	485
D	184.00	66	9.00	30	24.00	120
E	192.00	739	15.80	488	25.50	828
F	193.60	106	13.90	90	34.00	171
G	164.00	16	5	86	27.29	7
H	193.57	106	13.93	90	33.98	171
I	199.10	132	16.90	108	24.70	125
J	165.00	179	*	*	*	*
K	196.00	365	7	222	*	*
L	190.00	216	7.8	215	24.80	266
M	189.47	77	14.45	59.00	25.54	64
N	191.18	229	18.26	111	29.24	186
O	187.90	396	14.70	485	30.80	378

Note: Operator "A" is Air Midwest. Operator "J" did not properly conduct the survey; thus, that operator's data are not reflected in the survey results. The symbol * in this table indicates that the operator used actual weights.

Table 7. Federal Aviation Administration Notice 8400.40 survey results by category.

Category	Average weight (pounds)	Increase (pounds)
Average adult passenger weight	195.63	20.63
Average carry-on baggage weight	15.72	5.72
Average checked baggage weight	28.81	3.81

If the average sample weights were greater than the average weights in the operators' weight and balance program, the operators were to use the new average weights. If an operator thought that the increased weights were inappropriate, then the operator could either conduct a new validation survey using the criteria prescribed in AC 120-27C to determine new average weights or use actual weights. At the public hearing on this accident, an FAA air safety investigator from the Air Carrier Operations Branch stated that all 15 operators that used average weight programs adjusted the weights in one or more categories by 5 to 25 percent.

On May 12, 2003, the FAA issued Notice 8300.112, "Revision to All Average Weight Programs," which required all 14 CFR Part 121, 125, and 135 operators, by August 11, 2003, either to revise their average weight program or complete an average weight survey.[99] Operators that chose to revise their average weight program were to add 10 pounds per passenger for personal items, add 5 pounds for each domestic checked bag, and use actual weights for U.S. mail and company material.

In addition, the FAA plans to revise AC 120-27C and other related guidance after considering the advice and recommendations of an Aircraft Weight and Balance Control Program Aviation Rulemaking Committee. This committee is composed of government, union, and industry representatives from the aviation community.[100] The committee will address several issues, including average passenger, carry-on, and checked baggage weights; seasonal operations; time interval between average weight validations; oversized bag weights; and male/female ratios in average weight programs. The committee will also consider whether the FAA should implement different average weights based on aircraft passenger seating capacity.

The Aviation Rulemaking Committee provided the FAA with draft revisions to AC 120-27C on January 30, 2004. The FAA expects to release the new version of AC 120-27 (AC 120-27D) for comment at the end of 2004.

1.18.1.2 Air Midwest

Air carriers are required by 14 CFR 119.49(a)(9) to have, in their operations specifications, FAA authorization for the method of controlling weight and balance of their aircraft. Paragraph E-96 of Air Midwest's operations specifications contained the air carrier's weight and balance control procedures, which were approved by the Air Midwest PMI on April 9, 2001. The PMI approved Air Midwest's average weight program without validating that the program was viable. During the public hearing on this accident, the air safety investigator from the FAA's Air Carrier Operations Branch stated that air carriers were responsible for evaluating the program's impact on weight and balance.

The Air Midwest passenger and baggage weight procedures that were in effect at the time of the accident were detailed in the company's Flight Operations Procedures Manual, chapter 7, revision 02-02, dated January 18, 2002. The manual stated the following under the heading, "Passenger Weight Calculations":

> We are authorized to use average passenger weights in lieu of actual passenger weights to compute passenger loads over any route, except in those cases where nonstandard weight passenger groups are carried.

[99] The operators that participated in the average weight survey under Notice 8400.40 (see table 6) are exempt from this requirement.

[100] The first meeting of the Aviation Rulemaking Committee was held on August 26, 2003, in Washington, D.C. A second meeting was held on December 3 and 4, 2003, in Washington D.C. Four steering committee meetings have also been held.

Either method may be used interchangeably, provided only one method is used for any flight segment.

1) Actual weight

Actual weight may be determined by scale weighing of each passenger prior to boarding the aircraft, with such weight including minor articles carried on board by the passenger. If such articles are not weighed, account for the estimated weight. The actual passenger weight may also be determined by asking each passenger his weight, adding ten pounds per passenger during the calendar period from November 1 through April 30.

2) Average Passenger Weight

a. An average weight of 170 pounds (summer) may be used for adult passengers during the calendar period of May 1 through October 31.

b. An average weight of 175 pounds (winter) may be used for each adult passenger during the calendar period from November 1 through April 30.

c. An average of 80 pounds may be used for children between the ages of 2 and 12. Two children are counted as one passenger only for entering the Passenger Index Table and determining the index. When determining the passenger index, if there is an odd number (1, 3, 5, etc.) of children in a section, the last child is ignored if seated in the forward section and counted as an adult passenger if seated in the aft section. Children above 12 years of age are classified as adults for the purpose of weight and balance computations. Children less than 2 years old are considered "babes in arms".

NOTE: These passenger weights include minor items normally carried by a passenger and include ten pounds per passenger for carry-on luggage. These minor items may be stowed under the seats if they are the size and shape that fit under the seat, or may be stowed in the coat closet.

The articles stowed in the coat closet will be added as weight at 10 lbs. estimated weight or actual weight as deemed appropriate by the PIC. Carry-on luggage not fitting in the seat or in the coat closet will be put in the aft cargo bin and considered as 25 pounds for weight and balance purposes. Carry-on baggage/cargo that must be secured in a passenger seat, (musical instruments, television cameras, etc.) shall be secured forward of the most forward seated passenger. These items may be viewed as a child for the purpose of calculating index units.

The Flight Operations Procedures Manual stated the following under the heading, "Passenger and Baggage":

> The following average passenger baggage weights may be used in lieu of actual weights:
>
> 1) For each piece of checked baggage, an average of not less than 25 pounds, and
>
> 2) For each military duffle, average weight of 50 pounds.
>
> 3) Carry-on baggage is assumed at ten pounds per item.
>
> **NOTE:** Carry-on baggage weight is included in the average passenger weights shown in Paragraph (c) [in the "Passenger Weight Calculation" section].

The Flight Operations Procedures Manual detailed the method to establish the CG for a Beech 1900D airplane with a 19-seat configuration. The method required that index units for the airplane's basic operating weight, passengers, AFT1 and AFT2 cargo compartments, coat closet, and fuel be computed and added together. The index unit total was to be cross-referenced with the gross takeoff weight on a weight and CG envelope graph, and a mark was to be made on the graph to indicate where the gross takeoff weight and the index unit total intersected. This point of intersection was required to fall within the forward and aft limits of the CG envelope.

Also, the gross takeoff weight was required to be cross-referenced with the gross takeoff weight index on the weight and CG envelope graph, and the point of intersection was to fall within the forward and aft limits for both takeoff and landing. In addition, the zero fuel weight and the corresponding zero fuel weight index were required to be cross-referenced, and the point of intersection was to fall within the forward and aft limits of the CG envelope. If the point of intersection fell within a forward shaded area on the graph, passengers were to be seated fully aft within the forward and aft sections of the airplane; if the point fell within an aft shaded area, passengers were to be seated fully forward in both sections.[101]

The Flight Operations Procedures Manual also discussed Air Midwest's Beechcraft 1900D Load Manifest (form F-0001E). In normal operations, the flight crew is responsible for filling out most of the information on the form.[102] One copy of the form is left at the station, and one copy remains aboard the airplane. The manual stated that, before takeoff, both flight crewmembers were responsible for reviewing the manifest for errors and omissions.

1.18.1.2.1 Postaccident Weight and Balance Revisions

After the accident, Air Midwest implemented new average adult passenger and baggage weights, as shown in table 8, based on the results of the FAA-required survey (see section 1.18.1.1.1). According to Air Midwest, the new average weights became effective

[101] Rows 1 through 5 are in the airplane's forward section; rows 6 through 9 are in the airplane's aft section.

[102] Station operations personnel fill out the basic information in the upper right-hand corner of the form, but flight crewmembers are not precluded from filling out the entire form.

on May 11, 2003, and effectively reduced the Beech 1900D airplane capacity to a maximum of 17 passengers. The average weight for adult passengers increased from 175 pounds (November through April) and 170 pounds (May through October) to 200 pounds all year.[103] These passenger weights still include 10 pounds for items that are normally carried on board by passengers, such as handbags, briefcases, and laptop computers. Articles that are stored in the coat closet are counted as 10 pounds per bag or item. The average weight for checked baggage increased from 25 to 30 pounds, and the average weight for carry-on baggage stowed in the AFT1 cargo compartment decreased from 25 to 20 pounds. These weight and baggage revisions were incorporated into the Flight Operations Procedures Manual on June 12, 2003.

Table 8. Air Midwest revised weights compared with previous weights.

Category	Revised weight (pounds)	Former weight (pounds)
Adult passenger	190 (all year)	165 (winter), 160 (summer)
Carry-on baggage and personal items in cabin	0 for carry-on baggage, 10 for personal items	10 for both carry-on baggage and personal items
Total	200	175 (winter), 170 (summer)
Checked baggage in AFT1 cargo compartment	30	25
Carry-on baggage checked at airplane and stored in AFT1 cargo compartment	20	25

Air Midwest also revised its Beech 1900D load manifest form. The revised form showed the new passenger and checked baggage average weights and added the carry-on baggage weights. The revised form also included a table to calculate the total weight and CG index number for the flight crew, which was previously calculated as part of the airplane's basic operating weight, and an updated passenger index table. The revised load manifest form and instructions were incorporated into the Flight Operations Procedures Manual on April 25, 2003.

1.18.1.3 US Airways Express

Because Air Midwest flight 5481 was operating under a code-share agreement with US Airways Express, the flight was subject to US Airways Express' procedures for passenger, baggage, and cargo loading. Gate and ramp agents use the US Airways Express Load Report, form OF-11E, to account for all passengers, baggage, and cargo loaded on a US Airways Express flight. The OF-11E must be given to the flight crew on all flights except for ferry flights. The flight crew uses this information to complete the load manifest form.

The Air Midwest Flight Operations Procedures Manual and the US Airways Express Ground Operations Manual, Section 5, "Baggage & Cargo Loading," dated September 1, 2002, cited the specific items that needed to be completed on the OF-11E.

[103] The average weight for a child passenger between 2 and 12 years of age remained at 80 pounds.

These items included the total number of passengers, including children; the total number of pieces of checked, carry-on, and crew baggage; and the combined weight of all cargo in each bin. One copy of the OF-11E is left at the station, and the other copy is given to the flight crew. The US Airways Express manual indicated that the flight crew must be notified if passengers or bags were added after the OF-11E was completed and given to the crew. Any changes had to be noted in the "remarks" section of the station copy.

In a postaccident interview, the Director of US Airways Express Training stated that any bag weighing up to 70 pounds was accounted for under the average baggage weight program. She also stated that a bag weighing between 70 and 100 pounds was considered to be an overweight bag. Ticket agents are responsible for putting a "heavy bag" tag on such bags at check-in but are not required to list the weight of the bags on the heavy bag tags. Ramp agents are required to indicate "heavy bag" in the remarks section of the OF-11E for those bags with heavy bag tags. At the time of the accident, no formal procedures existed for reporting overweight bags in the weight and balance paperwork (except for military duffle bags, which were considered to have an average weight of 50 pounds).[104] The Director of US Airways Express Training further stated that bags that weigh more than 100 pounds were considered air freight. Procedures were in place for reporting air freight in the weight and balance paperwork.

According to the US Airways Express Ground Operations Manual, carry-on items that are too large to fit in the cabin of aircraft operated by US Airways Express must be tagged with a carry-on tag and placed in the cargo compartment of the aircraft. The items are to be loaded in the cargo compartment last, off-loaded first, and returned to the customer upon deplaning.

The US Airways Express Ramp Lesson Plan and Student Workbook states that the Beech 1900D AFT1 cargo compartment has a maximum weight allowance of 1,000 pounds and that the AFT2 cargo compartment has a maximum weight allowance of 630 pounds. The workbook cautions that "the rear section of the cargo compartment is only to be used at the instruction of the crew. The netting must stay in place at all other times."

1.18.2 Federal Aviation Administration Emergency Airworthiness Directive 2003-03-18

FAA Emergency AD 2003-03-18, dated January 27, 2003, was sent to all owners and operators of Beech 1900, 1900C, and 1900D airplanes. The AD indicated that recent ground testing and a review of the rigging procedures of a 1900D airplane revealed that the elevator control system could be misrigged to restrict elevator travel if current maintenance procedures were not properly followed. Such restricted travel might not be detected until the airplane was operating in a loading condition that required full elevator authority to control the pitch. The 1900 and 1900C models were included in this AD because their elevator control system design is similar to that of the 1900D model.

[104] The revised Air Midwest average baggage weight guidance states that, in the absence of an actual weight, an average weight of 60 pounds can be used for each heavy or oversized bag.

The FAA determined, among other things, that inspections and verifications should be accomplished on all affected airplanes to ensure that the elevator surfaces had full travel. Specifically, Emergency AD 2003-03-18 required owners and operators of Beech 1900 series airplanes, by January 31, 2003, to perform a control column sweep inspection to verify full elevator travel to the primary up and down stops and a stop bolt inspection to verify that the stop bolt length was not excessive. For those airplanes that did not pass the initial control column sweep and stop bolt inspections, the AD required another rig of the elevator control system and/or a more detailed inspection of the system. For those airplanes that did pass the initial control column sweep and stop bolt inspections, the AD required a more detailed inspection of the elevator control system within 100 hours time in service. In addition, the AD required that owners and operators of Beech 1900 series airplanes report the results of the initial inspections and the 100-hour time-in-service inspection (if applicable).

Air Midwest complied with Emergency AD 2003-03-18 and found that, of the 42 Beech 1900D airplanes in its inventory, 5 airplanes had maximum elevator deflections that were less than 20° or greater than 21° ANU (design range is between 20° and 21° ANU) or less than 14° AND (design range is between 14° and 15° AND).[105] In addition, one airplane's elevator control horn did not contact the left and right AND stop bolts, and another airplane's elevator control horn did not contact the left AND stop bolt.

According to the FAA, Raytheon Aircraft Company received 296 reports from the initial control column sweep and stop bolt inspection. The reports showed that 40 airplanes failed this initial check and thus required another rig. The FAA also indicated that Raytheon Aircraft received 227 reports from the 100-hour time-in-service inspection. According to the reports, 39 airplanes failed the 100-hour inspection, 18 of which failed by more than 1° in either the ANU or AND direction. Both the left and the right elevators on 9 of these 18 airplanes had insufficient AND travel. Specifically, the AND travel for these nine airplanes were as follows: four airplanes had left and right elevator deflections that were limited to 12° AND; one airplane had left and right elevator deflections limited to 13° and 11.3° AND, respectively; one airplane had left and right elevator deflections limited to 12.5° and 10.5° AND, respectively; one airplane had left and right elevator deflections limited to 12° and 13° AND, respectively; one airplane had left and right elevator deflections limited to 11.5° and 12.5° AND, respectively, and the airplane with the worst AND travel had left and right elevator deflections limited to 16.5° AND. The discrepancies in ANU travel ranged from 16.5° to 26° for the left elevator and from 17.5° to 26° for the right elevator.

[105] The first of the five airplanes had a maximum left elevator deflection of 19° ANU. The second airplane had a maximum right elevator deflection of 19° ANU. The third airplane had a maximum left elevator deflection of 21.5° ANU and a maximum right elevator deflection of 22.5° ANU. The fourth airplane had maximum left and right elevator deflections of 13° AND. The fifth airplane had a maximum left elevator deflection of 12.5° AND.

1.18.3 Federal Aviation Administration Guidance for On-the-Job Training

The FAA's *Human Factors Guide for Aviation Maintenance and Inspection*[106] described OJT as follows:

> On-the-job training (OJT) is the generic name describing a variety of training methods in which trainees work while they learn job skills. On-the-job training follows the apprenticeship model of education where a new employee is mentored by a seasoned employee thought to be an expert in the field. This is sometimes called the "buddy" system. Demonstration and supervised practice with equipment and procedures within the work environment is what is normally considered OJT.
>
> OJT has several positive aspects: trainees perform many job tasks while becoming more proficient; trainees observe highly skilled technicians perform the tasks they are learning; and the trainees have an opportunity to build one-to-one relationships with mentors.
>
> Improperly used however, OJT can be inefficient from both the points-of-view of learning and cost. The results of OJT are highly dependent on the trainer's teaching and interpersonal skills. In most OJT situations, the trainer is an AMT [aviation maintenance technician] whose primary job is maintenance, not training. At its worst, OJT is idiosyncratic, incomplete, haphazard, and time-consuming.

The *Human Factors Guide for Aviation Maintenance and Inspection* also explained the following:

> Certain aviation maintenance training practices have been frequently criticized. Recurrent training tends to receive less emphasis than the constant technological changes in the industry demand. Mechanics sent to school for training on a specific aircraft may not receive formal training again on that aircraft type for 10 years or more. Training related to technological changes tends to be done on the job, instead of in formal, structured settings. There is ample evidence that OJT is not the best training method for a variety of skills needed by today's AMT.
>
> Even when using OJT is appropriate, the current system has been criticized for its lax OJT training practices, which tend to be unstructured. Younger mechanics turn to more senior employees for ad hoc OJT, although there is no systematic way to ensure that the senior AMTs work or teaching skills are adequate to ensure the efficient transfer of skills and knowledge.

The *Human Factors Guide for Aviation Maintenance and Inspection* included voluntary guidelines for air carriers that wanted to develop OJT programs. These guidelines recommended that structured OJT be

[106] Maddox, M. (Ed.) *Human Factors Guide for Aviation Maintenance and Inspection, Version 3.0* (Atlanta: Galaxy Scientific Corporation, 1998).

- based on measurable performance standards;
- designed and delivered in a systems framework that includes information presentation, demonstration, practice, and evaluation;
- designed to provide initial, recurrent, and remedial training;
- used to standardize procedures and to provide consistent training among workers;
- conducted by experienced employees trained in structured OJT techniques and adult learning principles;
- delivered in segments that are planned, scheduled, and frequent and include keeping complete, up-to-date trainee performance records; and
- audited annually to identify areas in need of improvement.

In addition, the guide recommended that OJT be conducted in the following sequence: orientation, demonstration, practice, and evaluation and closure.

1.18.4 Other Related Accidents

1.18.4.1 Ryan Air Service Flight 103, Homer, Alaska

On November 23, 1987, Ryan Air Service flight 103, a Beech 1900C,[107] N401RA, crashed short of the runway during arrival at the Homer, Alaska, airport. Flight 103 was a scheduled 14 CFR Part 135 flight operating from Kodiak, Alaska, to Anchorage, Alaska, with intermediate stops in Homer and Kenai, Alaska. The 2 flight crewmembers and 16 passengers were killed, and 3 passengers were seriously injured.

The accident investigation revealed that the airplane was loaded with about 600 pounds more cargo than the first officer had requested. The airplane was 400 to 500 pounds over the airplane's maximum takeoff weight and 100 to 200 pounds over its maximum landing weight. In addition, the CG position was 12 to 16 percent MAC aft of the allowable aft limit, and the flight crew did not comply with company and FAA procedures in computing the CG position. Even with an extreme aft CG, the airplane was able to take off and establish cruise flight. Evidence indicated that the flight crew lost control of the airplane as its flaps were lowered for landing.

The Safety Board determined that the probable cause of this accident was the failure of the flight crew to properly supervise the loading of the airplane, which resulted in the CG being displaced to such an aft location that airplane control was lost when the flaps were lowered for landing.[108]

[107] The Beech 1900C is generally similar in size and capacity to the 1900D. The airplanes have numerous similar components and share a common FAA type certificate.

[108] For more information, see National Transportation Safety Board, *Ryan Air Service, Inc., Flight 103, Beech 1900C, N401RA, Homer, Alaska, November 23, 1987*, Aircraft Accident Report NTSB/AAR-88/11 (Washington, DC: NTSB, 1988).

Figure 11 shows flight 5481's weight and CG information compared with that for the flight 103 accident airplane. Two data points in the figure show the CG range for the flight 103 airplane.

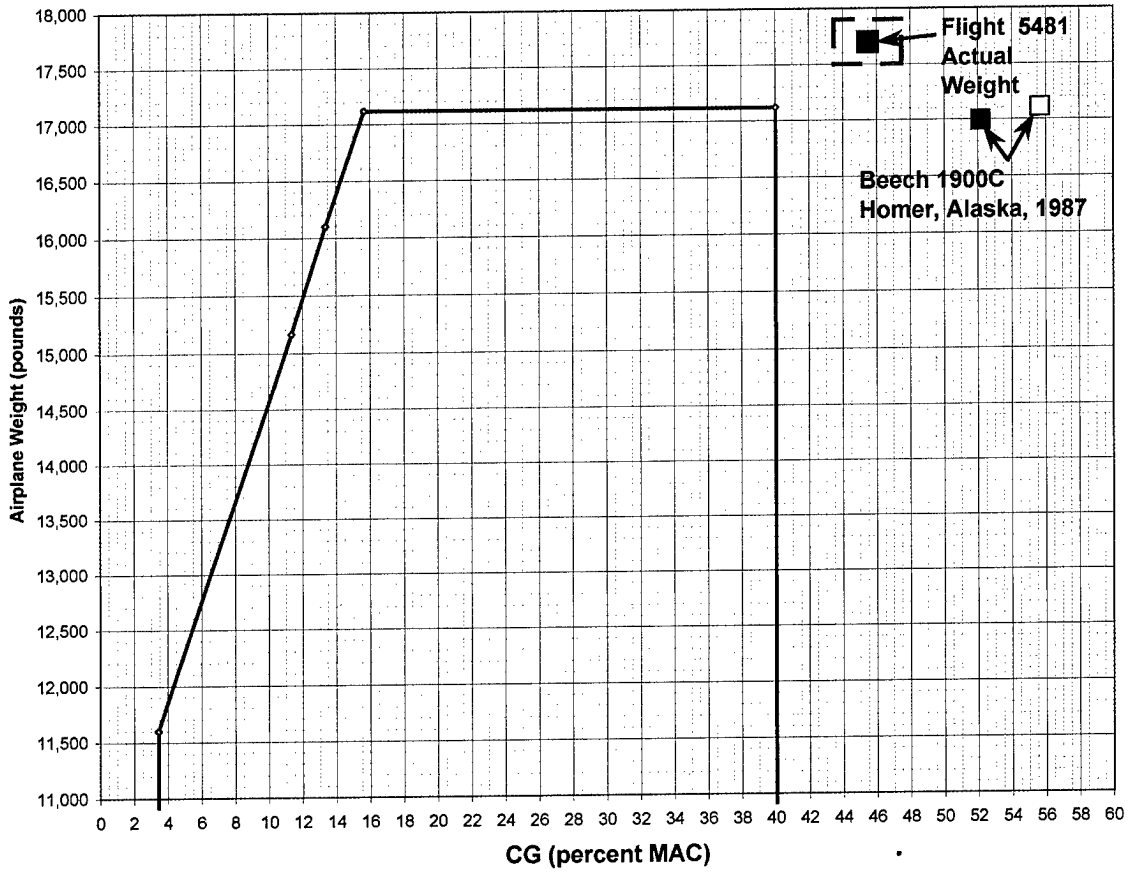

Figure 11. Flight 5481 weight and center of gravity information compared with flight 103 weight and center of gravity information.

1.18.4.2 ValuJet Airlines Flight 592, Everglades, Near Miami, Florida

On May 11, 1996, ValuJet Airlines flight 592, a Douglas DC-9-32, N904VJ, crashed into the Everglades, near Miami, Florida, about 10 minutes after takeoff from Miami International Airport. The 2 pilots, 3 flight attendants, and all 105 passengers were killed. Flight 592 was operating under 14 CFR 121 with a scheduled destination of the William B. Hartsfield International Airport, Atlanta, Georgia.

A fire erupted in the airplane's class D cargo compartment. The fire was initiated by the actuation of one or more oxygen generators being improperly carried as cargo. The oxygen generators were prepared and packaged for carriage aboard flight 592 by SabreTech, a 14 CFR Part 145 repair station in Miami that performed heavy maintenance for ValuJet Airlines.

The Safety Board's investigation of the FAA's oversight of ValuJet Airlines revealed that inspectors from the Aircraft Maintenance Division within the Office of Flight Standards had recommended recertification of the airline 3 months before the accident. Specifically, in a February 14, 1996, summary report, the inspectors indicated, "consideration should be given to an immediate FAR 121 recertification of this airline" because of safety-related issues, such as the absence of adequate policies and procedures for maintenance personnel. The inspectors also indicated that the overall surveillance of ValuJet Airlines should be increased with special attention directed toward "manuals and procedures, structural inspections, the adequacy of the maintenance program, and shops and facilities."

The Safety Board determined that the probable causes of this accident were (1) the failure of SabreTech to properly prepare, package, and identify unexpended chemical oxygen generators before presenting them to ValuJet for carriage; (2) the failure of ValuJet to oversee its contract maintenance program to ensure compliance with maintenance, maintenance training, and hazardous materials requirements and practices; and (3) the failure of the FAA to require smoke detection and fire suppression systems in class D cargo compartments.

Contributing to the accident was the failure of the FAA to adequately monitor ValuJet's heavy maintenance programs and responsibilities, including ValuJet's oversight of its contractors, and SabreTech's repair station certificate; the failure of the FAA to adequately respond to prior chemical oxygen generator fires with programs to address the potential hazards; and ValuJet's failure to ensure that both ValuJet and contract maintenance facility employees were aware of the carrier's "no-carry" hazardous materials policy and had received appropriate hazardous materials training.[109]

1.18.4.2.1 Safety Recommendation A-97-70

During its investigation of the ValuJet Airlines flight 592 accident, the Safety Board determined that the SabreTech mechanics had many shortcomings, including their failure to install safety caps, their improper maintenance entries, their use of improper tags, and their inadequate communications between the maintenance shop floor and stores department. In its final report on the accident, the Board indicated that these shortcomings resulted from human failures that might have been avoided if more attention were given to human factors issues in the maintenance environment. As a result, the Board issued Safety Recommendation A-97-70 on September 9, 1997. Safety Recommendation A-97-70 asked the FAA to

> Include, in its development and approval of air carrier maintenance procedures and programs, explicit consideration of human factors issues, including training, procedures development, redundancy, supervision, and the work environment, to improve the performance of personnel and their adherence to procedures.

[109] For more information, see National Transportation Safety Board, *In-flight Fire and Impact With Terrain, ValuJet Airlines Flight 592, DC-9-32, N904VJ, Everglades, Near Miami, Florida, May 11, 1996,* Aircraft Accident Report NTSB/AAR-97/06 (Washington, DC: NTSB, 1997).

On October 2, 2000, the FAA stated that it had reviewed the information contained in its report, *Human Factors in Aviation Maintenance and Inspection, Strategic Program Plan*, and that it was amending AC 120-16C, "Continuous Airworthiness Maintenance Programs," to include information from the report. The FAA indicated that the revisions to the AC would also expand on CASS programs. On April 24, 2001, the Safety Board stated that it was difficult to determine whether the revisions to AC 120-16C would address the issues in this recommendation. On July 21, 2003, the FAA stated that chapter 10 of AC 120-16D included human factors as part of initial training.

On February 23, 2004, the Safety Board stated that, although AC 120-16D addressed many of the human factors issues related to training, procedures development, redundancy, supervision, and work environment, the AC would be significantly strengthened if the FAA added specific references to its available human factors information related to aviation maintenance operations, such as the *Human Factors Guide for Aviation Maintenance and Inspection*. The Board also stated that it continued to investigate major accidents in which incorrect maintenance led to a loss of control of the airplane and that human factors in aviation maintenance was an important safety issue. Pending the inclusion in AC 120-16D of references to FAA-published guidance on human factors in aviation maintenance, Safety Recommendation A-97-70 was classified "Open—Acceptable Response."

1.18.4.2.2 Safety Recommendation A-97-74

In its final report on the ValuJet Airlines flight 592 accident, the Safety Board determined that the FAA's surveillance of ValuJet before the accident did not include any significant oversight of the air carrier's heavy maintenance contractors, including SabreTech. The Board further determined that the FAA's limited oversight of ValuJet's maintenance contractors was not sufficient to detect potential problems. The ValuJet PMI was not required to conduct surveillance of the air carrier's contract maintenance facilities. Thus, the Board concluded that the lack of an explicit requirement for a PMI of a 14 CFR Part 121 air carrier to regularly inspect repair stations that are performing heavy maintenance for the carrier is a significant deficiency in the FAA's oversight of the carrier's total maintenance program. As a result, the Board issued Safety Recommendation A-97-74 on September 9, 1997. Safety Recommendation A-97-74 asked the FAA to

> Ensure that Part 121 air carriers' maintenance functions receive the same level of FAA surveillance, regardless of whether those functions are performed in house or by a contract maintenance facility.

On April 22, 1998, the FAA stated that it issued Flight Standards Handbook Bulletin for Airworthiness 96-05C, "Air Carrier Operations Specifications Authorization to Make Arrangements With Other Organizations to Perform Substantial Maintenance," on December 15, 1997. The FAA indicated that the bulletin described

> detailed procedures to ensure that surveillance of each 14 CFR Part 121 air carrier's maintenance function entails the performance of the maintenance, the adequacy of the maintenance organization, the competency of maintenance personnel, and the adequacy of maintenance facilities and equipment, regardless of whether those functions are performed in-house or by a contract maintenance facility.

On July 23, 1999, the Safety Board stated that the FAA's actions met the intent of Safety Recommendation A-97-74 and classified it "Closed—Acceptable Action."

1.18.4.3 Fine Airlines Flight 101, Miami, Florida

On August 7, 1997, Fine Airlines flight 101, a Douglas DC-8-61, N27UA, crashed after takeoff from Miami International Airport. The three flight crewmembers and one passenger on board the airplane were killed, one person on the ground was killed, and the airplane was destroyed by impact forces and a postcrash fire. The cargo flight, which had a scheduled destination of Santo Domingo, Dominican Republic, was operated under 14 CFR Part 121 as a supplemental air carrier.

The accident airplane was loaded incorrectly, which resulted in an aft CG. Also, an incorrect stabilizer trim setting precipitated an extreme pitchup at rotation.

The Safety Board determined that the probable cause of this accident was the failure of Fine Air to exercise operational control over the cargo loading process and the failure of Aeromar (a cargo shipper) to load the airplane as specified by Fine Air. Contributing to the accident was the failure of the FAA to adequately monitor Fine Air's operational control responsibilities for cargo loading and to ensure that known cargo-related deficiencies were corrected at Fine Air.[110]

1.18.4.3.1 Safety Recommendation A-98-49

In its final report on the Fine Airlines accident, the Safety Board discussed the Sum Total Aft and Nose (STAN) system, which is an electronic system installed on some cargo airplanes that allows flight crews to verify an airplane's weight and balance before departure. According to the report, the STAN system uses pressure transducers to convert main gear and nose gear shock strut air pressure to an electronic signal. The system then provides flight crews with a digital readout in the cockpit (on the flight engineer's instrument panel) of the airplane's gross weight and CG values.

The Safety Board's final report on the Fine Airlines accident concluded that, if the flight crew had an independent method in the cockpit for verifying the airplane's actual weight and balance and gross weight, it might have alerted them to loading anomalies and prevented the accident. As a result, on July 10, 1998, the Safety Board issued Safety Recommendation A-98-49 to the FAA. Safety Recommendation A-98-49 asked the FAA to

[110] For more information, see National Transportation Safety Board, *Uncontrolled Impact With Terrain, Fine Airlines Flight 101, Douglas DC-8-61, N27UA, Miami, Florida, August 7, 1997*, Aircraft Accident Report NTSB/AAR-98/02 (Washington, DC: NTSB, 1998).

> Evaluate the benefit of the STAN (Sum Total Aft and Nose) and similar systems and require, if warranted, the installation of a system that displays airplane weight and balance and gross weight in the cockpit of transport-category cargo airplanes.

On December 30, 1998, the FAA stated that it had completed an evaluation of the reliability of onboard weight and balance systems. The FAA found that some operators had reliability and accuracy concerns with such systems because of factors such as wind, ramp slope, oleo stiction, low hydraulic pressure, and asymmetrical gear loads. The FAA stated that the results of its evaluation did not support imposing a requirement to install a system that displays airplane weight and balance and gross weight in the cockpit of transport-category cargo airplanes. On January 11, 2000, the Safety Board stated that, on the basis of the FAA's evaluation and subsequent determination that onboard weight and balance systems do not yet meet the quality standards for a mandatory system, Safety Recommendation A-98-49 was classified "Closed—Acceptable Action."

1.18.4.4 Emery Airlines Flight 17, Rancho Cordova, California

On February 16, 2000, Emery Airlines flight 17, a McDonnell Douglas DC-8-71F, N8079U, crashed in an automobile salvage yard shortly after takeoff while attempting to return to Sacramento Mather Airport, Rancho Cordova, California, for an emergency landing. Flight 17 was a scheduled 14 CFR Part 121 cargo flight from Sacramento to James M. Cox Dayton International Airport, Dayton, Ohio. The two pilots and the flight engineer were killed, and the airplane was destroyed.

The Safety Board's investigation of this accident determined that the bolt attaching the accident airplane's right elevator control tab crank fitting to the pushrod was improperly secured and inspected during either the airplane's most recent D inspection (heavy maintenance accomplished every 12 years) or subsequent maintenance. Tennessee Technical Services (TTS), an Emery Airlines maintenance contractor, performed the accident airplane's last D inspection between August 27 and November 17, 1999. Eight days after the D inspection was completed, a pilot reported increased control column forces. Emery maintenance personnel found that the left and the right elevator dampers were reversed, and the maintenance logbook indicated that the maintenance personnel moved the dampers to their correct positions. Emery maintenance personnel could have come in contact with the bolt at the control tab crank fitting while troubleshooting the reported problem.

The Safety Board determined that the probable cause of the accident was a loss of pitch control resulting from the disconnection of the right elevator control tab. The disconnection was caused by the failure to properly secure and inspect the attachment bolt.[111]

---

[111] For more information, see National Transportation Safety Board, *Loss of Pitch Control on Takeoff, Emery Worldwide Airlines, Inc., Flight 17, McDonnell Douglas DC-8-71F, N8079U, Rancho Cordova, California, February 16, 2000,* Aircraft Accident Report NTSB/AAR-03/02 (Washington, DC: NTSB, 2003).

1.18.4.4.1 Safety Recommendation A-03-31

In its final report on the Emery Airlines flight 17 accident, the Safety Board discussed the accident airplane's last B-2 maintenance inspection (the second of four segmented inspections generally accomplished at 136-hour intervals) on January 21 and 22, 2000. The B-2 inspection includes a visual check of the elevators and tabs for general condition, corrosion, leakage, and security of attachment. The DC-8 elevator assembly design requires the elevator control tab inboard fairing to be removed for maintenance personnel to inspect the inboard hinge fitting and the control tab crank fitting to pushrod attachment.

During postaccident interviews, Emery Airlines maintenance personnel stated that, when performing the accident airplane's last B-2 maintenance, they did not remove the elevator control tab inboard fairing or inspect the crank fitting to pushrod attachment. During public hearing testimony, witnesses from Emery Airlines indicated that its B-2 inspection was intended to be a general visual inspection that was to be accomplished without removing access or inspection panels or fairings. However, witnesses from TTS stated that removal of the control tab fairing was necessary to satisfactorily perform the tasks described on the Emery Airlines B-2 work card, even though that step was not specifically listed on the work card.

The Safety Board noted that several air carriers have tried to clarify the intended scope of maintenance tasks by including, on their work cards, an enumeration of the actions that are necessary for the proper accomplishment of the associated work task. The Board stated that the inclusion of this additional detail on work cards, although not required by the FAA, should result in more consistent accomplishment of maintenance tasks. As a result, the Board issued Safety Recommendation A-03-31 on August 18, 2003. Safety Recommendation A-03-31 asked the FAA to

> Require all 14 CFR Part 121 air carrier operators to revise their task documents and/or work cards to describe explicitly the process to be followed in accomplishing maintenance tasks.

On January 12, 2004, the FAA stated that Safety Recommendation A-03-31 was limited to DC-8 operators only. The FAA also stated that the Boeing Company issued temporary revisions to the DC-8 AMM on May 8, 2002, and that these revisions explicitly described the maintenance task process to be followed. On January 23, 2004, the Safety Board classified Safety Recommendation A-03-31 "Open—Response Received."

1.18.4.5 Colgan Air Flight 9446, Yarmouth, Massachusetts

On August 26, 2003, Colgan Air (doing business as US Airways Express) flight 9446, a Beech 1900D, N240CJ, crashed into water near Yarmouth, Massachusetts. The two flight crewmembers were killed, and the airplane was substantially damaged. The repositioning flight, which was conducted under 14 CFR Part 91, departed Barnstable Municipal Airport, Hyannis, Massachusetts, for Albany International Airport (ALB), Albany, New York.

Shortly after takeoff, the flight crewmembers declared an emergency and reported a trim problem. The airplane had reached an altitude of about 1,100 feet msl. The flight crew requested to land on a specific runway, and the controller cleared the flight to land on any runway. No further transmissions were received from the flight crew. FDR data indicated that the airplane's airspeed continued to increase to about 250 knots and that the airplane's last recorded altitude was about 300 feet msl.

The accident airplane's FDR pitch trim control position parameter had been placed on the minimum equipment list (deferred maintenance) for the flight because the parameter was not calibrated. The Safety Board's airplane performance study for this accident determined that the recorded pitch trim control positions did not reflect the actual pitch trim control positions. The difference between the recorded and actual pitch trim control positions was about 2.1° ANU.

According to the airplane performance study, the airplane began the flight with a pitch trim control position of about 0.5° ANU. Shortly after takeoff, the pitch trim control position moved to about 0.8° AND and remained there for about 10 seconds. The pitch trim control position then moved to about 5° AND and remained there for the rest of the flight. Calculations showed that the airplane would have required about 200 pounds of aft (pulling) control force to maintain level flight in the out-of-trim condition.

The accident flight was the first flight after maintenance had been performed on the airplane. The maintenance work included replacement of both elevator trim tab actuators (because of a failed freeplay check) in accordance with Beech 1900D AMM section 27-30-06, "Elevator Trim Tab Actuator, Removal and Installation and the Actuator Cable Replacement." The procedure required that the elevator be removed before the actuators were replaced. The Safety Board's investigation of this accident determined that the mechanics skipped this procedural step and replaced the actuators with the elevators installed.

The mechanics thought that the forward elevator trim tab cable had become jammed or kinked during the replacement of the trim tab actuator. The mechanics then tried to replace the cable according to the procedure in Beech 1900D AMM section 27-30-04, "Elevator Trim Tab Cables, Removal and Installation." A postaccident examination of a section of the forward elevator trim cable revealed evidence consistent with a misrouted cable. The Beech 1900D AMM and Colgan Air work cards did not include a trim system check at the end of the elevator trim tab cable procedure. Although the mechanics stated that they checked the trim system, evidence was consistent with the trim system operating in a direction opposite from the command of the trim wheel.[112]

The Safety Board's investigation of this accident revealed that the illustration of the forward elevator trim tab cable drum appeared backward in section 27-30-04 in the Beech 1900D AMM. On October 22, 2003, Raytheon Aircraft Company revised its Beech 1900D AMM elevator trim tab cable rigging procedure to show the correct illustration for the forward elevator trim tab cable drum.

[112] Additional information about this accident, NYC03MA183, can be found on the Safety Board's Web site.

1.18.4.5.1 Federal Aviation Administration Airworthiness Directive 2003-20-10

On October 15, 2003, the FAA issued AD 2003-20-10, which applied to all Beech model 1900, 1900C, and 1900D airplanes. The FAA reviewed Raytheon Aircraft's current maintenance procedures for the elevator trim system and determined that the figures in the applicable maintenance manuals depicted the elevator trim cable drum at 180° from the installed position and showed the open, keyed side of the drum instead of the flat side of the drum.[113] The FAA's review of the maintenance procedure also identified the need to add a step to visually confirm that the trim wheel position and the trim tab position were consistent. According to the FAA, such a check would detect and correct any problems with the elevator trim system installation before problems occur during operation.

AD 2003-20-10 warned that an incorrectly installed elevator trim system component, if not detected and corrected, could result in difficulties in controlling the airplane or a total loss of pitch control. As a result, the AD required operators of Beech 1900 series airplanes to replace the incorrect figure in the elevator trim system maintenance procedures with the corrected figure, incorporate a temporary revision to the applicable maintenance manual that describes the elevator trim operational check, and perform an elevator trim operational check each time maintenance is accomplished on the elevator trim system.[114]

1.18.4.6 CommutAir Flight 8718, Albany, New York

On October 16, 2003, CommutAir (doing business as Continental Connection) flight 8718, a Beech 1900D, N850CA, aborted takeoff from ALB because of an elevator control system discrepancy. The pilot stated that, during the takeoff roll, the control column would not move aft when the airspeed reached V_1.[115] The intended destination for the positioning flight, which was conducted under 14 CFR Part 91, was Westchester County Airport, White Plains, New York. The two flight crewmembers were not injured, and the airplane was not damaged.

Maintenance was performed on the airplane 1 day before the incident, and the incident flight was the first postmaintenance flight. Maintenance records showed that a worn detent pin was replaced on the right thrust lever assembly. The mechanic who replaced the detent pin stated that he looked in the Beech 1900D AMM for a procedure to replace the pin or a procedure to access the thrust lever assembly. The mechanic indicated

[113] The FAA indicated that, although the figures in the manuals were incorrectly depicted, the step-by-step instructions in the procedure, if followed correctly, would result in the proper installation and action of the elevator trim system. If only the figures were used, a reversing of the action of the elevator manual trim system could result.

[114] Raytheon Aircraft Company addressed these issues in its Safety Communiqué number 234, dated September 2003.

[115] According to 14 CFR Part 1, "V_1 means the maximum speed in the takeoff at which the pilot must take the first action (e.g., apply brakes, reduce thrust, deploy speed brakes) to stop the airplane within the accelerate-stop distance. V_1 also means the minimum speed in the takeoff, following a failure of the critical engine at V_{EF} [the speed at which the critical engine is assumed to fail during takeoff], at which the pilot can continue the takeoff and achieve the required height above the takeoff surface within the takeoff distance."

that the Beech 1900D AMM did not contain either procedure, so he looked in a CommutAir manual that contained a list of the manufacturer's field service kits, found a reference to a field service kit for "thrust lever, replaceable detent pin," and obtained the kit.

The field service kit installation instructions included a step to remove the thrust control assembly from the center pedestal, but the instructions did not provide information about how to access the thrust lever assembly so that it could be removed from the pedestal. The instructions also did not provide any reference to technical documents that contained instructions for the removal and installation of the thrust lever assembly.

The mechanic stated that he accessed the thrust lever assembly by removing the elevator trim wheel and an access panel from the left side of the cockpit pedestal. No writeup was generated for the trim wheel removal, and no markings or tags were placed on the trim wheel to ensure proper reinstallation. The investigation of this incident determined that, when the elevator trim wheel was reinstalled, the mechanic did not properly align the elevator trim tab position indicator with the elevator trim tab position.[116] As a result, the trim wheel was reinstalled incorrectly. The mechanic did not perform a functional test of the elevator trim control system, as required by AD 2003-20-10 (see section 1.18.4.5.1).[117]

The Safety Board and Raytheon Aircraft Company performed a functional check of the elevator trim control system. The check verified that the elevator trim tab position indicator did not accurately reflect the elevator trim tab position. Specifically, when the elevator trim tab position indicator was set at 3 units of ANU trim, the elevator trim tab was deflected 4.6° AND from its neutral position. (The elevator trim tab's full AND position is 5.5° from neutral.) The functional check determined that the elevator trim tab position indicator pointer was off by about 6 units, which equates to about 8.8° of elevator trim tab, or about 37 percent of the trim tab's full range of travel.

After the cause of the elevator trim control system discrepancy was determined, a CommutAir mechanic properly aligned the elevator trim tab position indicator to the elevator trim tab position. Elevator and elevator trim control system functional tests were accomplished to verify that the systems were operating according to the requirements described in the Beech 1900D AMM. A high-speed taxi test and a flight test were accomplished to verify the functionality of the elevator and elevator trim control systems.[118]

---

[116] When the elevator trim tab position indicator is at 0°, the elevator trim tab position should also be at 0°.

[117] The quality assurance inspector also did not perform a functional test of the elevator trim control system. The inspector stated that he did not know that the mechanic's work involved the trim system.

[118] Additional information about this incident, NYC04IA010, can be found on the Safety Board's Web site.

1.18.5 Human Factors Research

Since 1989, the FAA has sponsored a research program on human factors in aviation maintenance and produced guidance on countermeasures to mitigate human factors problems in aviation maintenance. For example, the FAA's *Guide to Human Factors in Maintenance and Inspection* provides information on work shift scheduling programs, workplace design, and procedural guidance design. The guide also addresses developing and implementing structured OJT programs, maintenance error reporting programs, and maintenance resource management training.[119]

The European Joint Aviation Authorities (JAA)[120] association has also sponsored initiatives addressing human factors problems in aviation maintenance. The JAA focused its efforts on revising the regulatory framework under which aviation maintenance is performed. In its May 2001 *Human Factors in Maintenance Working Group Report*,[121] the JAA proposed revisions to its *Joint Aviation Regulations* (JARs). These proposed revisions included the following requirements for maintenance organizations:

- communicate information about deficiencies in maintenance procedures to aircraft certificate holders,
- publish an organizational safety policy,
- consider human factors principles when writing maintenance procedures,
- develop appropriate shift turnover procedures,
- consider human fatigue limitations in the organization's planning,
- consider performing duplicate maintenance inspections,
- plan maintenance work better,
- ensure thorough inspection of maintenance work before inspector signoff, and
- require initial and recurrent training of maintenance personnel to ensure that human factors principles are effectively applied within maintenance organizations.

In September 2003, the JAA revised JAR Part 145, "Approved Maintenance Organizations," to include this information.

---

[119] AC 120-72, "Maintenance Resource Management Training," which provides guidelines for specialized voluntary training programs for improving communication, effectiveness, and safety in maintenance organizations, is an example of the FAA's efforts to encourage voluntary human factors programs in the aviation industry.

[120] The JAA is an associated body of the European Civil Aviation Conference, which represents the civil aviation regulatory authorities of those European States that have agreed to cooperate in developing and implementing common regulatory safety standards and procedures.

[121] Joint Aviation Authorities Maintenance Human Factors Working Group, *Human Factors in Maintenance Working Group Report* (Hoofddorp, the Netherlands: JAA, 2001).

1.18.6 Other Passenger and Baggage Weight Information

1.18.6.1 Civil Aviation Authority Report

The Civil Aviation Authority (CAA), the FAA's counterpart in the United Kingdom, conducted a survey between November 1981 and January 1982 to determine the distribution of passengers and their carry-on baggage aboard scheduled air carrier flights. The survey was conducted 18 times at Heathrow Airport because of its high turnover during the day and its wide variety of international and domestic flights. Departing international and domestic passengers and their carry-on baggage were weighed on a scale with a digital readout; testing at the beginning and the end of the survey found that the scale was accurate to within 0.5 percent.

International passengers were asked about where they were traveling, whether they were traveling for business or leisure, and whether they had checked any baggage. The international passengers and their carry-on baggage were then weighed. Domestic passengers were asked whether they had checked any baggage, and then the passengers and their carry-on baggage were weighed. The CAA's survey results appear in table 9.[122]

Table 9. Results of the Civil Aviation Authority's weight and carry-on baggage survey.

Category	Number surveyed	Average weights (in pounds)[a]	
		International	Domestic
Male passenger	1,928[b]	178	181
Female passenger	769[c]	141	140
Child passenger	72[d]	56	56
Infant passenger	6[d]	25	25
Carry-on baggage	2,775[e]	12	12

[a] For this report, the average weights were converted from kilograms to pounds and then were rounded to the nearest whole number.

[b] Of the 1,928 male passengers surveyed, 1,632 were international passengers, and 296 were domestic passengers.

[c] Of the 769 female passengers surveyed, 692 were international passengers, and 77 were domestic passengers.

[d] The child and infant passengers surveyed were not categorized according to whether they were international or domestic passengers. A child was considered to be between 2 and 11 years of age, and an infant was considered to be under 2 years of age.

[e] The carry-on baggage was not categorized according to whether the bags belonged to international or domestic passengers.

According to the CAA's report, the average weight for male passengers was between 13 and 16 pounds more than the CAA's male passenger weight at the time of the survey (about 165 pounds). The average weight for female passengers was between 2 and

[122] For more information, see Civil Aviation Authority, *Passenger and Hand Baggage Weight Survey, Heathrow Airport – Winter 1981/1982*, CAA Paper 83003 (London: CAA, 1983).

3 pounds less than the CAA's female passenger weight at the time (about 143 pounds). The average weight for carry-on baggage was 5 pounds more than the CAA's carry-on baggage weight at the time (about 7 pounds).

1.18.6.2 Australian Department of Transport and Communications Report

The Flight Standards Division of the Australian Department of Transport and Communications conducted a project to investigate the methodology of standard weights and weight surveys. The Flight Standards Division was concerned about the use of 170 pounds (converted from kilograms) as the standard adult passenger weight in aircraft of all passenger capacities. The 170-pound figure, which was derived from a survey conducted in 1946, made no distinction between male and female passengers and included carry-on baggage.

The Flight Standards Division found that the adult standard weight of 170 pounds was based on inaccurate and outdated passenger weight data. The 1988 report on this project[123] included a discussion of the following issues:

- the need for new weight surveys,
- the basic statistics theory applicable to standard weights,
- the errors in the criteria used to determine the then-current standard weights,
- the maximum probability of overload and its relation to safety,
- the effect on the maximum probability of overload when the standard passenger weight was constant,
- the effect on standard passenger weight when the maximum probability of overload was constant,
- a proposed method for calculating future standard passenger weights (a sliding-scale formula that based passenger weight on the maximum seating capacity of the airplane), and
- interim standard weights based on then-current data from the Australian National Heart Foundation for adult males and females and the Australian National Health and Medical Research Council for infants (under 3 years of age), children (4 to 12 years of age), and adolescent males and females (13 to 16 years of age).

The Flight Standards Division concluded that the use of one adult standard weight for all aircraft capacities was no longer acceptable because smaller aircraft had a significant risk of being overloaded and larger aircraft were being unnecessarily penalized. The Flight Standards Division further concluded that all aircraft should have a similar level of safety with respect to the uncertainty of passenger load and that a

[123] For more information, see Airworthiness Branch, Flight Standards Division, Department of Transport and Communications, *Standard Weights for Passenger and Baggage in Australian Aircraft*, Airworthiness Report AF 51 (Canberra: Department of Transport and Communications, 1988).

sliding-scale method of calculating standard weights particular to the aircraft capacity should be adopted.

The Flight Standards Division proposed passenger standard weights to be used when actual passenger weights are not used. The proposed standard weights for adult males and females, infants, children, and adolescent males and females decreased as the maximum seating capacity of the airplane increased. The standard weights for an airplane with a maximum seating capacity of 15 to 19 passengers and crewmembers are shown in table 10. (The Beech 1900D has a maximum seating capacity of 19 seats.)

Table 10. Australian Department of Transport and Communications proposed standard passenger weights for airplanes with a maximum seating capacity of 15 to 19 seats.

Category	Standard weight (in pounds)[a]
Adult male	187
Adult female	152
Infant	35
Child	95
Adolescent male	139
Adolescent female	126

[a] For this report, the average weights were converted from kilograms to pounds and then were rounded to the nearest whole number.

1.18.6.3 Civil Aviation Authority of New Zealand Survey

In 2003, the CAA of New Zealand commissioned a survey to identify the current average weight of domestic passengers traveling aboard large airplanes with more than 30 passenger seats, medium-sized airplanes with 10 to 30 passenger seats, and helicopters and airplanes with 9 or fewer passenger seats. Previous passenger weight surveys by the CAA of New Zealand showed that the current standard weight at the time—equivalent to about 170 pounds—was out of date. A 1999 study showed that the average weight for passengers traveling aboard airplanes with more than 30 passenger seats was equivalent to about 187 pounds. Also in 1999, the New Zealand Ministry of Health found that the average weight of New Zealanders was increasing by 3 kilograms (6.6 pounds) per decade.

During October and November 2003, 15,414 domestic passengers who were 13 years of age and older were weighed, first with their carry-on baggage and then without the baggage. Most of the passengers were weighed at three major airports—Auckland, Wellington, and Christchurch—and a small number of passengers were weighed at the Queenstown airport. Of the 15,414 survey participants, 8,491, or 55 percent, were male, and 6,923, or 45 percent, were female. The results of the survey are shown in table 11.

Table 11. Results of the Civil Aviation Authority of New Zealand's weight and carry-on baggage survey.

Category	Average weight (in pounds)[a]
Male passenger	195
Female passenger	159
Male passenger with carry-on baggage	207
Female passenger with carry-on baggage	169

[a] For this report, the average weights were converted from kilograms to pounds and were then rounded to the nearest whole number.

The 2003 average weight for male passengers with their carry-on baggage increased from the 1999 figure by about 3 pounds. The 2003 average weight for female passengers with their carry-on baggage increased from the 1999 figure by about 7 pounds.

According to the survey report,[124] the results of the survey will be incorporated into proposed rule amendments that are expected to become effective in the second quarter of 2004.

[124] *2003 Survey of Passenger Weights Market Research Report* (Lower Hutt, New Zealand: CAA, 2003).

2. Analysis

2.1 General

The captain and the first officer were properly certificated and qualified under Federal regulations. No evidence indicated any preexisting medical or behavioral conditions that might have adversely affected their performance during the accident flight. Flight crew fatigue was not a factor in this accident.

The accident airplane was properly certified and equipped in accordance with Federal regulations. Except for the elevator control system (which is discussed in section 2.3), no evidence indicated that the airplane was improperly maintained. The recovered components showed no evidence of any preexisting structural, engine, or systems failures.

Weather was not a factor in this accident. The air traffic controllers that handled the accident flight were properly trained and provided appropriate air traffic control services. The emergency response for this accident was timely and effective. The accident was not survivable for the airplane occupants because they were subjected to impact forces that exceeded the limits of human tolerance.

This analysis discusses why the flight crew lost control of the airplane during its takeoff rotation and initial climb and what effect the airplane's elevator and center of gravity (CG) had on this accident. The analysis also examines organizational and management issues that played a role in the circumstances of this accident and provides information about an ongoing problem with cockpit voice recorders (CVR) installed on Beech 1900 series airplanes.

2.2 Loading and Preflight Activities

On the day of the accident, the accident first officer was seen conducting a walk-around inspection of the airplane. He did not report anything unusual about the airplane, including its elevator control system.[125]

The accident flight crew filled out the Air Midwest Beechcraft 1900D Load Manifest form for the flight using the average weight values for passengers and baggage in Air Midwest's weight and balance program at the time of the accident.[126] The load

[125] The three previous flight crews who flew the accident airplane also did not report anything unusual about the elevator control system. In fact, the first officer of the flight from Huntington, West Virginia (HTS), to Charlotte, North Carolina, on January 7, 2003, stated that "everything was normal" and "it was a good flying airplane."

[126] The flight crew made a 10-pound addition error when summing the weights that comprise the zero fuel weight. This addition error was not a factor in the accident.

manifest indicated a taxi fuel burn of 220 pounds, even though Air Midwest assumes a taxi fuel burn of 110 pounds. These figures resulted in a calculated airplane weight of 17,028 pounds and a CG position of 37.8 percent mean aerodynamic chord (MAC), which were within the Beech 1900D certified weight and CG limits of 17,120 pounds and 40 percent MAC, respectively.

The two ramp agents assigned to the accident flight handled the baggage according to company procedures and interacted appropriately with the flight crew. In a postaccident interview, one of the ramp agents reported that he told the captain that 2 of the 31 bags aboard the airplane had an estimated weight of between 70 and 80 pounds. However, the bags did not have a heavy bag tag attached to them. (Gate agents use these tags to indicate an overweight bag, that is, a bag that weighs between 70 and 100 pounds.) Also, the bags were not identified as overweight on the OF-11E form (the US Airways Express Load Report that is used to account for all passengers, baggage, and cargo loaded on a US Airways Express flight). As a result, the flight crew was not required to account for the extra weight of the reportedly heavy bags on the load manifest form.

Even if the flight crew had (1) accounted for the two reportedly heavy bags or (2) accounted for the two heavy bags, estimated an additional 110 pounds of fuel at takeoff,[127] and recorded the 12-year-old passenger's weight as 80 pounds rather than 175 pounds,[128] the Air Midwest weight and balance program would still have indicated that flight 5481 was within the Beech 1900D certified weight and CG limits, as shown in table 12. However, for the second scenario, flight 5481's calculated weight would have exceeded the Beech 1900D weight limit if the 12-year-old passenger's weight had remained 175 pounds.

Table 12. Calculations for Air Midwest flight 5481 using the weight and balance program in effect at the time of the accident.

Load manifest		Load manifest plus two bags		Load manifest plus two bags and 110 pounds of fuel but with 80 pounds for the child passenger	
Weight (pounds)	CG (percent MAC)	Weight (pounds)	CG (percent MAC)	Weight (pounds)	CG (percent MAC)
17,028	37.8	17,078	38.8	17,093	38.8

[127] According to the flight 5481 dispatch release, the airplane was loaded with 2,420 pounds of fuel before takeoff. Given Air Midwest's taxi fuel burn assumption of 110 pounds, the airplane would have had 2,310 pounds of fuel at takeoff. The load manifest indicated that the airplane had 2,200 pounds of fuel at takeoff.

[128] The Air Midwest Flight Operations Procedures Manual at the time of the accident (see section 1.18.1.2) stated that an average weight of 175 pounds could be used for each adult passenger during the winter and that an average of 80 pounds could be used for children between the ages of 2 and 12 years.

2.3 Restricted Downward Elevator Travel

Flight data recorder (FDR) and CVR data from the accident flight showed that the airplane was rotating airplane nose up (ANU) after takeoff, even though the flight crew was pushing the control column fully forward and trimming the airplane in the airplane-nose-down (AND) direction. Neither of these actions allowed the flight crew to control the airplane's pitch attitude.

FDR data, ground test results, and the airplane performance study for this accident showed that, before the accident airplane's detail six (D6) maintenance check on January 6, 2003, at Air Midwest's HTS maintenance station, the airplane's full range of downward elevator travel was available. FDR data, ground test results, and the airplane performance study also showed that, after the D6 maintenance check, the airplane's downward elevator travel was limited to about 7° rather than the 14° to 15° specified in the Beech 1900D Airliner Maintenance Manual (AMM).

Before the D6 maintenance check, the accident airplane's actual elevator position (derived from Beech 1900D aerodynamic characteristics and performance data from the FDR) was consistent with the pitch control position recorded on the FDR. Specifically, before maintenance, the actual elevator position during a typical cruise flight was 4° AND, and the pitch control position recorded on the FDR was also 4° AND.

After the D6 maintenance check, the accident airplane's actual elevator position (derived from Beech 1900D aerodynamic characteristics and performance data from the FDR) was not consistent with the pitch control position recorded on the FDR. Specifically, the actual elevator position during a typical cruise flight was again determined to be 4° AND, but the pitch control position recorded on the FDR was 13° AND. Thus, the FDR pitch control position sensor (which is attached to structure located to the left of the base of the control column) indicated a 9° AND shift, even though the actual elevator position remained at 4° AND. Further, when the maximum elevator available was achieved or commanded during postmaintenance ground operations and during the accident flight, the actual elevator position was 7° AND; however, as a result of the 9° AND shift, the FDR recorded a pitch control position of 16° AND.

The Safety Board examined the maintenance work performed at HTS during the accident airplane's D6 maintenance check to determine whether any of the work resulted in the airplane's restricted downward elevator movement. Part of the D6 check involved checking the tension of the elevator control system cables and adjusting the tension if necessary. The Structural Modification and Repair Technicians (SMART) mechanic who performed this work had not previously performed it on a Beech 1900D. As a result, the mechanic was receiving on-the-job training (OJT) from a Raytheon Aerospace, LLC (RALLC), quality assurance inspector for the tasks associated with that part of the D6 check. (The OJT provided to the mechanic is discussed in section 2.3.2.)

The SMART mechanic determined that the accident airplane's cables needed to be adjusted because their average tension was too low. He stated that he adjusted the cables

and performed some, but not all, of the steps of the elevator control system rigging procedure (section 27-30-02) in the Beech 1900D AMM. However, whenever cable tension adjustments are made, the entire elevator control system rigging procedure needs to be performed and not just those steps that apply to cable tensioning. (The issue of skipped procedural steps is discussed in section 2.3.3.)

Examination of the accident airplane's pitch control cable turnbuckles as found in the wreckage revealed that the AND turnbuckle, which measured 7.30 inches in length, was extended 1.76 inches more than the ANU turnbuckle, which measured 5.54 inches in length. However, according to data from Air Midwest's postaccident survey of its entire fleet of 42 Beech 1900D airplanes, the AND turnbuckle was extended, on average, only 0.04 inch less than the ANU turnbuckle. Further, ground tests showed that turnbuckles adjusted to the lengths of those found in the wreckage would result in limited downward elevator travel, although the FDR would indicate that full downward travel was available.

The Safety Board could not determine the exact measurements of the accident airplane's ANU and AND cable turnbuckles and other adjustable components[129] when the airplane entered the D6 maintenance check. However, it is clear that the adjustments to the cable turnbuckles (and possibly other adjustable components) during maintenance resulted in FDR pitch control measurements that showed a 9° AND loss of travel, which restricted the accident airplane's elevator travel to 7° AND.

The Safety Board could not precisely determine the changes that were made to the elevator control system during the D6 maintenance check to restrict the accident airplane's elevator travel to 7° AND. However, during the ground tests, the Board discovered one scenario that provided results that were reasonably consistent with FDR data from the accident airplane. Specifically, when the rig pin for the aft bellcrank was not removed from the test airplane and the cable tension was released and then the rig pin for the forward bellcrank was installed aft of the bellcrank arm, adjustments to the turnbuckles resulted in an ANU turnbuckle length of 5.12 inches and an AND turnbuckle length of 7.70 inches. After the aft rig pin was removed, the test airplane's elevator moved to 7.7° AND.

The Safety Board concludes that the accident airplane entered the D6 maintenance check with an elevator control system that was rigged to achieve full elevator travel in the downward direction. The Safety Board further concludes that the accident airplane's elevator control system was incorrectly rigged during the D6 maintenance check and that the incorrect rigging restricted the airplane's elevator travel to 7° AND, or about one-half of the downward travel specified by the airplane manufacturer.

2.3.1 Conspicuity of the Elevator Control System Misrig

The only visible sign of the misrig during the first officer's external preflight inspection would have been a change in the elevator resting position. The normal elevator

[129] The other adjustable components are the forward push-pull tube; the left and right aft pushrods; and the primary, secondary, and tertiary control stops.

resting position is between 14° and 15° AND; after the misrig, the elevator resting position was about 7° AND. Because the horizontal stabilizer on a parked Beech 1900D is located about 15 feet above the ground, it would be difficult to detect the change in the elevator resting position from the ground. In fact, during ground tests, Safety Board investigators, while on the ground, observed the test airplane's elevator before and after the elevator control system was misrigged. The investigators did not observe a conspicuous change in the elevator resting position. The ground tests also showed that, in both rigging positions, the control column was fully forward. When the control column was pulled fully aft, the range of total control column travel for the misrigged position was 1 inch less than for the properly rigged position. However, the 1-inch reduction in the range of travel was not noticeable to Board investigators.

The ground tests further showed that the only evidence during flight of the misrig would have been a forward shift of the control column's neutral (0°) position by about 0.72 inch. No control column markings or other visual indications would have alerted the flight crew that the control column position corresponding to the elevator's neutral position had changed. In addition, three Beech 1900D type-rated pilots conducted control sweeps (full forward and full aft movement of the control column) on a test airplane with the elevator control system rigged according to the Beech 1900 AMM and then with the system rigged to match the accident airplane. The pilots did not report any noticeable change in the feel or position of the control wheel between the two sets of control sweeps.

The Safety Board concludes that the changes in the elevator control system resulting from the incorrect rigging were not conspicuous to the flight crew.

2.3.2 Adequacy of On-the-Job Training Provided to the Mechanic

Five of the six SMART mechanics who were on duty on the night of January 6, 2003, had worked at HTS for less than 8 weeks. None of these mechanics had completed training for the D6 maintenance check. The mechanic assigned by the foreman (the other SMART mechanic on duty at HTS on January 6th) to perform the elevator control cable check was selected for the task because he had previously accomplished flight control rigging work on DHC-8 airplanes. The RALLC quality assurance inspector, who was providing the mechanic's OJT, stated that he did not think he needed to closely supervise the mechanic because of his previous flight control rigging experience.

The mechanic stated that, before he inspected the elevator control system, the foreman helped him locate the access panel for the forward bellcrank rig pin and the elevator cable turnbuckles. The mechanic also stated that he and the quality assurance inspector discussed the low cable tensions, the need to adjust the tensions, and the steps that could be skipped. The mechanic indicated that the quality assurance inspector then left to attend to other duties. The mechanic further stated that another mechanic held the turnbuckles while he adjusted them and that the quality assurance inspector returned after the rigging work was completed to observe the final check of the elevator control system.

The quality assurance inspector stated that, after he verified that the forward bellcrank rig pin had been inserted (he did not actually observe the rig pin being inserted), he left the mechanic unsupervised during the elevator control cable inspections and turnbuckle adjustments. The quality assurance inspector indicated that he had to conduct other duties, which included providing OJT to another mechanic and performing a borescope inspection on an engine. The inspector also indicated that he returned to inspect the elevator control system after the mechanic had completed his work. (Section 2.3.4 provides information about the inspector's inspection.)

Even though the mechanic possessed previous flight control rigging experience, he had never performed rigging work on the Beech 1900D airplane. As a result, the mechanic needed more training and supervision than the quality assurance inspector had provided. It would have been prudent for the quality assurance inspector to have described the components of the elevator control system; explained the steps in the rigging procedure, demonstrated the critical steps, and insisted that all steps needed to be accomplished; and observed the mechanic while he examined the elevator control cable tensions and performed the rigging work.

The insufficient training and supervision resulted in the mechanic making mistakes that led to the incorrect rigging and the restricted downward elevator travel. If the quality assurance inspector had provided better training and supervision, the likelihood of such errors would have been minimized. The Safety Board concludes that the RALLC quality assurance inspector did not provide adequate OJT and supervision to the SMART mechanic who examined and incorrectly adjusted the elevator control system on the accident airplane.

2.3.3 Skipped Steps in the Elevator Control System Rigging Procedure

The Beech 1900D elevator control system rigging procedure (section 27-30-02) does not include provisions for adjusting cable tension as an isolated task. However, the mechanic decided to adjust the cables as an isolated task and, as a result, did not follow each step included in the rigging procedure. The quality assurance inspector was aware that the mechanic was selectively performing steps from the rigging procedure and that he was only adjusting cable tension. In fact, the inspector stated, during a postaccident interview, that he did not think the manufacturer intended for mechanics to follow the entire rigging procedure and that the entire procedure had not been followed when past cable tension adjustments were made.

The mechanic skipped nine applicable steps in the Beech 1900D elevator control system rigging procedure (see section 1.6.3.2).[130] One of these steps indicated that, for airplanes equipped with an F-1000 FDR, the pitch position potentiometer needed to be calibrated (step u). The mechanic was required to perform this step because the accident airplane had an F-1000 FDR installed. Step u indicated that, to calibrate the pitch position potentiometer, the mechanic needed to perform the FDR pitch adjustment procedure described in another section of the Beech 1900D AMM. This procedure referred the mechanic to a table that specified eight different elevator settings, ranging from 14° AND to 20° ANU (including 0°), and instructed the mechanic to record the FDR readout for these settings. The mechanic, however, would not have been able to move the elevator to the first setting, 14° AND, because elevator travel was restricted to about 7° AND.

The performance of step u would have likely alerted the mechanic or the quality assurance inspector that the elevator control system was not properly rigged. However, the mechanic indicated that he skipped step u because he thought the calibration did not need to be done. The quality assurance inspector stated that he did not think that an FDR was installed on the airplane, but the inspector should have known that the airplane was equipped with an FDR because most, if not all, Beech 1900D airplanes were outfitted with an FDR. Also, the inspector could have easily determined that the airplane was equipped with an FDR. Specifically, the wiring and the sensor for the FDR were in the same area of the airplane where maintenance was being performed. Also, the FDR unit is mounted in the forward (AFT1) cargo compartment and is readily visible. In addition, a circuit breaker for the FDR is located in the cockpit.

Title 14 *Code of Federal Regulations* (CFR) 121.367 states that aircraft maintenance, preventive maintenance, and alterations are to be performed in accordance with operators' maintenance manuals. Thus, maintenance personnel are expected to follow all procedural steps unless authorization has been granted. The SMART mechanic and RALLC quality assurance inspector were not authorized to decide whether a specific step of the maintenance manual could be skipped. Air carriers have procedures in place for making such determinations on a one-time or short-term basis. These determinations are made by managers and engineers in accordance with the air carrier's maintenance manual.[131]

For long-term changes, the Continuing Analysis and Surveillance System (CASS) is used to change an air carrier's maintenance procedure if it is deficient or needs correction. Title 14 CFR 121.373(a), "Continuing Analysis and Surveillance," requires operators to establish and maintain a system for the continuing analysis and surveillance

[130] The Safety Board is aware of another recent instance in which mechanics skipped a step of a Beech 1900D AMM procedure. Specifically, the investigation into the August 26, 2003, Colgan Air flight 9446 accident determined that the mechanics had to replace both elevator trim tab actuators because of excessive freeplay. Beech 1900D AMM section 27-30-06 required the mechanics to remove the elevators before the actuators were replaced. However, the mechanics skipped that procedural step and replaced the actuators with the elevators installed.

[131] The Air Midwest General Maintenance Manual required that deviations to maintenance procedures be approved by the Federal Aviation Administration (FAA), but the HTS maintenance station did not have the necessary support during the night shift to receive such approval.

of the performance and effectiveness of their maintenance and inspection programs and for the correction of any deficiency found in those programs. Also, FAA Advisory Circular (AC) 120-16D, "Continuous Airworthiness Maintenance Programs," states that CASS programs must ensure that all elements of an air carrier's maintenance program are being accomplished in accordance with its maintenance manual and that any deficiencies in an air carrier's manual are identified and corrected. (Sections 2.5.1.3 and 2.5.2.2 provide details about Air Midwest's CASS program and the FAA's oversight of CASS programs, respectively.) The findings of the flight 5481 investigation suggest that air carriers may not have adequate CASS programs despite the requirements of 14 CFR 121.373.

The Safety Board concludes that, because the RALLC quality assurance inspector and the SMART mechanic did not diligently follow the elevator control system rigging procedure as written, they missed a critical step that would have likely detected the misrig and thus prevented the accident. Therefore, the Safety Board believes that the FAA should adopt a program for performing targeted surveillance and increased oversight of maintenance practices at 14 CFR Part 121 air carriers to ensure that maintenance instructions are being followed as written and that maintenance personnel (including, but not limited to, management, quality assurance, tooling, and training personnel, as well as mechanics) are following all steps in the instructions unless authorization has been granted in accordance with the air carrier's maintenance program. In addition, the Safety Board believes that the FAA should verify that 14 CFR Part 121 air carriers have procedures in their CASS program for identifying deficiencies and incorporating changes to the carrier's maintenance program and that maintenance personnel for these air carriers (including, but not limited to, management, quality assurance, tooling, and training personnel, as well as mechanics) use these procedures.

2.3.4 Lack of an Effective Postmaintenance Check

The mechanic indicated that he conducted control sweeps from the cockpit after the cable tension had been adjusted. He stated that he "ran the elevator full travel a few times" and then checked the cable tensions to make sure that they had not changed. However, the mechanic also stated that no one was at the tail of the airplane observing the elevator travel when he conducted the control sweeps.

The quality assurance inspector stated that he observed the elevator at a neutral position on the travel board with the rig pin installed at the forward bellcrank. The inspector also stated that, after the rig pin was removed, he grasped the elevator with the travel board still attached and moved the elevator throughout the available travel. The inspector thought that the elevator could be fully deflected with the forward bellcrank rig pin removed and stated that elevator travel was "within limits." However, results from the Safety Board's investigation, including simulations, ground tests, and FDR data, indicated that elevator travel could not have been within the limits specified in Beech 1900D AMM section 27-30-02. The quality assurance inspector further stated that he was present when the mechanic verified cable tension by attaching a tensiometer on both cables and checking the tensions.

The postmaintenance checks performed by the quality assurance inspector and the mechanic were not adequate to detect the elevator control system misrig. As stated in section 2.3.3, if step u of the rigging procedure (the calibration of the pitch position potentiometer) had been performed on the accident airplane, it is likely that the quality assurance inspector and the mechanic would have caught the misrigging problem. Also, if a functional check had been included at the end of the procedure, the quality assurance inspector and the mechanic would have had another opportunity to detect the misrigging problem. A functional check at the end of the procedure would have provided a more comprehensive, systematic, and direct method to ensure that any misrigging problem was caught before an airplane was returned to service.[132] Such a functional check would consist of a mechanic in the cockpit pushing the control wheel full forward and then pulling the wheel full aft while another mechanic, who was at eye level with the horizontal stabilizer, measured the position of the elevator using a travel board. This process would determine whether the elevator achieved the correct deflection for the full forward and full aft movement of the control column.

The Safety Board recognizes that Raytheon Aircraft Company added a postmaintenance functional check to its revised elevator control system rigging procedure issued on February 12, 2003. Specifically, step aa indicates that the mechanic is to move the control wheel aft and forward and verify that the elevator moves up 20° +1°/-0° and down 14° +1°/-0°, respectively, and that the control stops make contact.

The lack of a functional check at the end of a maintenance procedure is also an issue with the Colgan Air flight 9446 accident. During the replacement of the elevator trim tab actuators, the mechanics thought that the forward elevator trim tab cable had become jammed or kinked and thus needed to be replaced. The mechanics tried to replace the cable in accordance with Beech 1900D AMM section 27-30-04. This procedure does not describe in detail how to manipulate the electric and manual trim systems in each direction and verify that the full range of motion in the commanded direction is observed at the trim tabs. The mechanics stated, during a postaccident interview, that they moved the trim tabs through a full range of motion using the electric and manual systems and observed no anomalies. However, without a detailed procedure to ensure that the trim tabs are moving in the proper direction, it is possible that the trim tabs could move in a reversed direction and remain unnoticed.

In addition, the investigation of the October 16, 2003, CommutAir flight 8718 incident determined that the mechanic did not perform a functional test of the elevator trim control system, as required by FAA Airworthiness Directive (AD) 2003-20-10. A functional check of the system would have indicated that the elevator trim wheel had been reinstalled incorrectly.

The Safety Board concludes that a complete functional check at the end of maintenance for critical flight systems or their components[133] would help to ensure their

[132] The Safety Board notes that some elevator control system maintenance procedures do not include an FDR check and that FDRs can be placed on an air carrier's minimum equipment list, as was the case with Colgan Air flight 9446.

safe operation, but no such check is currently required. Therefore, the Safety Board believes that the FAA should modify (1) appendix G of 14 CFR Part 23 and appendix H of 14 CFR Part 25 and (2) 14 CFR 121.369 to require that the Instructions for Continued Airworthiness and air carrier maintenance manuals, respectively, include a complete functional check at the end of maintenance for each critical flight system. The Safety Board also believes that the FAA should require manufacturers of aircraft operated under 14 CFR Part 121 to identify appropriate procedures for a complete functional check of each critical flight system; determine which maintenance procedures should be followed by such functional checks; and modify their existing maintenance manuals, if necessary, so that they contain procedures at the end of maintenance for a complete functional check of each critical flight system. The Safety Board further believes that the FAA should require 14 CFR Part 121 air carriers to modify their existing maintenance manuals, if necessary, so that they contain procedures at the end of maintenance for a complete functional check of each critical flight system.

2.4 Aft Center of Gravity and Its Effect on the Restricted Elevator Travel

The airplane performance study for flight 5481 determined that the accident airplane's actual weight was about 17,700 pounds and that its actual CG position was about 45.5 percent MAC. As a result, flight 5481 had exceeded the Beech 1900D certified weight limit of 17,120 pounds and the certified aft CG limit of 40 percent MAC.

Of the accident airplane's 10 flights after the D6 maintenance check, the accident flight was by far the most aft loaded.[134] When an airplane is loaded so that the CG is aft of the aft limit, greater-than-normal AND pitch control is required.

The Safety Board made several calculations to determine the conditions under which the accident airplane would have been flyable during different flight segments. The calculations showed that, with full elevator travel (14° to 15° AND) and the accident airplane loaded to the weight and balance of the accident flight, the airplane should have been able to maintain flight during the takeoff and climb (requiring 9° to 10° AND elevator), cruise and descent (requiring 5° to 6° AND elevator), and approach and land (requiring 8° to 9° AND elevator) segments. The calculations also showed that, with reduced elevator travel (7° to 8° AND) and the accident airplane loaded to, but not exceeding, the Beech 1900D weight and CG limits, the airplane might have been able to fly during the takeoff and climb (requiring 7° to 8° AND elevator), cruise and descent (requiring 4° to 5° AND elevator), and approach and land (requiring 7° to 8° AND elevator) segments. Even if the required AND elevator slightly exceeded the available AND elevator, the airplane would have been controllable. The airplane would have

[133] A flight system or component is considered critical if its failure can be catastrophic.

[134] Although the other nine flights after the D6 maintenance check had a CG position that was farther forward, the airplane was still being operated in a potentially dangerous situation as a result of the restricted downward elevator travel.

entered a climb before achieving cruise speed, but takeoff and climb, cruise and descent, and approach and land could have been controllable with the available elevator and changes in engine power.

The restricted elevator travel alone and the aft CG alone would not have been sufficient to cause the uncontrolled pitchup that led to the flight 5481 accident. The Safety Board concludes that flight 5481 had an excessive aft CG, which, combined with the reduced downward elevator travel resulting from the incorrect elevator rigging, rendered the airplane uncontrollable in the pitch axis.

2.4.1 Air Midwest's Weight and Balance Programs

If Air Midwest's revised (May 2003) weight and balance program had been in effect for flight 5481, the flight crew would have had to take some action to bring the airplane within the Beech 1900D certified weight and balance envelope (17,120 pounds and 40 percent MAC, respectively). If the flight crew had, for example, off-loaded two passengers seated in the last row of the airplane and three bags from the AFT1 cargo compartment, a calculated weight of 17,106 pounds and CG position of 35.9 percent MAC would have resulted. Even though this calculated weight and CG position would have indicated that the airplane was within the Beech 1900D weight and CG envelope, the actual weight would have been almost 100 pounds more than the weight limit (17,233 pounds), and the actual CG position would have been slightly under the aft CG limit (39.9 percent MAC).

Under this scenario, Air Midwest's revised weight and balance program would have produced a much safer condition than the weight and balance program that was in effect at the time of the accident: the revised actual takeoff weight (17,233 pounds) would have been about 500 pounds less than the accident flight's actual takeoff weight (17,700 pounds), and the revised actual CG position (39.9 percent MAC) would have been about 5 percent MAC closer to the aft CG limit than the accident airplane's actual CG position (45.5 percent MAC). However, the revised weight and balance program would have underestimated the actual CG position by about 4 percent MAC by producing a calculated CG position of 35.9 percent MAC instead of an actual CG position of 39.9 percent MAC.

The Safety Board considered another hypothetical scenario that showed unacceptable results when using Air Midwest's revised weight and balance program. If the accident airplane had 50 fewer gallons of fuel at the time of departure and eight checked bags were off-loaded to meet the airplane's weight limit, the calculated airplane weight and CG position, based on Air Midwest's revised weight and balance program, would be 17,016 pounds and 36.7 percent MAC, respectively. Thus, the calculated weight and CG position for this scenario indicated that the airplane would be within the Beech 1900D weight and CG envelope. However, the airplane's actual weight and CG position for this scenario would be 17,129 pounds and 42.1 percent MAC. As a result, the calculated CG position would be in error by more than 5 percent MAC, and, more importantly, the CG position would be aft of the aft limit by more than 2 percent MAC. This calculation shows that Air Midwest's current weight and balance program is still susceptible to unacceptable errors in determining an airplane's actual CG position.

Table 13 compares the weight and CG position for flight 5481 using Air Midwest's weight and balance program that was in effect at the time of the accident and Air Midwest's revised weight and balance program with the actual weights and CG positions that would have been present at takeoff.

Table 13. Weight and center of gravity calculations for flight 5481.

Weight and balance method	Calculated weight (pounds)	Actual weight (pounds)	Calculated CG (percent MAC)	Actual CG (percent MAC)
Air Midwest's weight and balance program at the time of the accident	17,028	17,700	37.8	45.5
Air Midwest's revised weight and balance program[a]	17,106	17,233	35.9	39.9
Air Midwest's revised weight and balance program off-load scenario[b]	17,016	17,129	36.7	42.1

[a] These calculations assume that two passengers seated in the last row of the airplane and three bags from the AFT1 cargo compartment were off-loaded.

[b] These calculations are based on a scenario in which the airplane had 50 fewer gallons of fuel at the time of departure and eight checked bags were off-loaded.

The Safety Board concludes that Air Midwest's weight and balance program at the time of the accident was not correct and resulted in a substantially inaccurate weight and balance calculation for flight 5481. The Safety Board further concludes that Air Midwest's revised weight and balance program is also unacceptable because it may result in an inaccurate calculation of an airplane's CG position. Section 2.5.2.4 discusses the FAA's oversight of air carrier average weight and balance programs and other sources of error in weight and balance calculations.

2.5 Organizational and Management Factors

2.5.1 Air Midwest

As previously stated, Air Midwest contracted with RALLC for maintenance work at HTS, and RALLC contracted with SMART to provide mechanics for this work. According to AC 120-16D, air carriers can use contractors to accomplish maintenance as long as the air carrier retains the responsibility for the performance and approval of that maintenance. Thus, Air Midwest was responsible for all of the maintenance that was performed on its airplanes. However, none of the seven maintenance personnel who were on duty at HTS on the night of January 6, 2003, were Air Midwest employees. In fact, Air Midwest's sole representative at the HTS maintenance station, the regional site manager,

worked the day shift at the time, so he was not present when the maintenance work was actually being performed.

As stated in section 2.3.3, 14 CFR 121.367 requires aircraft maintenance, preventive maintenance, and alterations to be performed in accordance with an air carrier's maintenance manual. Also, AC 120-16D indicates that it is the air carrier's responsibility to make sure that a contractor is performing maintenance according to the air carrier's maintenance program and maintenance manual. Thus, although the SMART mechanic decided to skip several steps in the elevator control system rigging procedure and the RALLC quality assurance inspector concurred with the mechanic's decision to skip steps, it was still Air Midwest's responsibility to ensure that its maintenance manual was being followed.

In its final report on the ValuJet Airlines flight 592 accident, the Safety Board recognized that air carriers could successfully subcontract maintenance. However, the Board noted that air carriers engaging in subcontracting had to properly oversee their contractors to ensure the airworthiness of their airplanes. The Board stated that, although subcontractors bear independent responsibility for their activities, an air carrier cannot delegate its responsibility for the safety of its operations and maintenance to its subcontractors. The Board concluded that ValuJet failed to adequately oversee SabreTech (a heavy maintenance contractor) and that this failure was causal to the accident.

The Air Midwest flight 5481 accident presents another example of an air carrier that did not adequately oversee airplane maintenance being performed by contractors. Title 14 CFR 121.363 states that an air carrier is responsible for ensuring the airworthiness of the aircraft it operates and that an air carrier is not relieved of this responsibility when maintenance is contracted to another party. Also, 14 CFR 121.367 states that an air carrier is responsible for determining that each aircraft released to service is airworthy and has been properly maintained. Thus, although the SMART mechanic incorrectly rigged the accident airplane's elevator control system and the RALLC quality assurance inspector failed to detect the problem, Air Midwest was ultimately responsible for returning the airplane to service in an airworthy condition.

The Safety Board concludes that Air Midwest did not adequately oversee the work performed by RALLC and SMART personnel at its HTS maintenance station and did not ensure that the accident airplane was returned to service in an airworthy condition.

2.5.1.1 Required Inspection Item Maintenance Tasks and Inspections

Air Midwest's Maintenance Procedures Manual states that elevator control system rigging is a required inspection item (RII), which means that maintenance work performed on the system must be inspected before the airplane can be returned to service. Title 14 CFR 121.371(c) states, "no person may perform a required inspection if [that person] performed the item of work required to be inspected." The aircraft maintenance record of nonroutine items for January 6, 2003, at HTS showed, in a discrepancy block about the airplane's low elevator cable tension, an RII stamp and the quality assurance inspector's stamp (see figure 2 in section 1.1.1).

RII maintenance tasks that are not performed properly could result in a failure, malfunction, or defect that would endanger the safe operation of the airplane. Thus, it is imperative to have an independent inspection of RII maintenance tasks by a second, fully qualified mechanic to ensure that the work has been properly completed. Current regulations do not explicitly prohibit inspectors from training a mechanic on a task and then inspecting that same task.[135] However, the inspectors cannot properly fulfill their RII responsibilities in such a situation. The purpose of an RII inspection is to provide "a second set of eyes" to ensure that any error made in performing maintenance work is detected and corrected before an airplane is returned to service. The Safety Board concludes that, when an inspector provides OJT for an RII maintenance task and then inspects that same task, the independent nature of the RII inspection is compromised. Therefore, the Safety Board believes that the FAA should prohibit inspectors from performing RII inspections on any maintenance task for which the inspector provided OJT to the mechanic who accomplished the task.

According to AC 120-16D, Air Midwest was responsible for overseeing the performance of RII inspections. In fact, Air Midwest acknowledged in its contract with RALLC that Air Midwest would be responsible for quality control and quality assurance inspections. However, oversight of the quality assurance function at HTS went through two different levels of management at RALLC (the Regional Airline Maintenance Service [RAMS] quality assurance manager in Panama City, Florida, and the RAMS Executive Program Manager for Airline Support in Madison, Mississippi) before becoming the responsibility of the Air Midwest Chief Inspector/Director of Quality Assurance in Wichita, Kansas (see figure 10). In addition, the only Air Midwest employee at HTS (the regional site manager) normally worked the day shift, and he was only sporadically present when the maintenance work and inspections were being accomplished. As a result, Air Midwest was not sufficiently overseeing the RII inspections at HTS, which is especially troublesome considering the importance of these inspections.

Sufficient oversight of RII maintenance tasks and inspections requires air carrier personnel to maintain an on-site presence and to be thoroughly involved in, and familiar with, all aspects of a maintenance facility's operations relating to RII tasks and inspections. Such oversight requires, at a minimum, that air carrier personnel be physically present when a substantial amount of the RII planning, tasking, maintenance work, and inspections are performed and that air carrier personnel be readily available when they are not physically present. In addition, air carriers need to ensure that the processes and procedures used by contractors to perform RII maintenance tasks and inspections are the same as those used by air carrier maintenance personnel.

[135] On March 26, 2003, the quality assurance inspector at HTS on the night of January 6, 2003, was advised that the FAA would be investigating the inspector's actions in "giving on-the-job training after work was assigned." On September 30, 2003, the FAA notified the inspector that the investigation "did not establish a violation of the Federal Aviation Regulations [FAR]." (The FAA also investigated the mechanic's actions "involving work being accomplished" and the foreman's actions "involving work being assigned," and the investigation found that their actions did not violate the FARs.)

The Safety Board concludes that air carriers that use contractors to perform RII maintenance tasks and inspections need to provide substantial and direct oversight during each work shift to ensure that this work is being properly conducted. Therefore, the Safety Board believes that the FAA should require 14 CFR Part 121 air carriers that use contractors to perform RII maintenance tasks and inspections to have air carrier personnel who are physically present when a substantial amount of the RII planning, tasking, maintenance work, and inspections are performed and are readily available when they are not physically present and who ensure that the processes and procedures used by contractors to perform RII maintenance tasks and inspections are the same as those used by air carrier maintenance personnel.

2.5.1.2 Maintenance Training Program

2.5.1.2.1 Maintenance Training Guidelines

Air Midwest required mechanics to complete OJT for a procedure before they could perform that procedure unsupervised. However, Air Midwest had little guidance on how to effectively provide OJT.

The only guidance in Air Midwest's Maintenance Training Manual about OJT as a training method stated that (1) OJT would teach knowledge and practical skills of normal job-related duties and would include practical situations found every day on the job and (2) OJT would be performed under the guidance of a qualified technician or staff member who has documentation of previously received OJT. The Maintenance Training Manual did not include other issues related to the delivery of OJT, including how many students should be permitted per instructor, how tasks should be demonstrated before being performed, how the learning environment should be controlled, and how to ensure that the skills learned through OJT would be retained.

Because Air Midwest lacked specific OJT guidance, the OJT provided to new mechanics at the HTS maintenance station varied based on the instructors' teaching style. For example, the quality assurance inspector on the night of January 6, 2003, stated, during a postaccident interview, that it was not necessary to "hold [a mechanic's] hand" if he thought the mechanic knew what he was doing based on past experience. Also, the mechanic who performed the elevator cable inspection and adjustments on the accident airplane indicated that it was routine for mechanics to work independently during OJT and receive little supervision. However, a mechanic who assisted the quality assurance inspector with the engine borescope inspection on the night of January 6th stated that, when he last received OJT, the instructor (who was at HTS from the Panama City maintenance station) walked him through the task "step by step."

The Safety Board concludes that Air Midwest did not have maintenance training policies and procedures in place to ensure that each of its maintenance stations had an effective OJT program.

Air carriers are required by 14 CFR 121.367(b) to ensure the competence of their maintenance personnel for the proper performance of maintenance, preventive

maintenance, and alterations. However, according to AC 120-16D, FAA regulations contain the flexibility necessary to allow each air carrier to develop a training program that fits its particular needs. Many air carriers have provided, and will continue to provide, airplane-specific maintenance training through OJT programs.

During a 1993 Safety Board public hearing on commuter airline safety, representatives from the commuter airline industry indicated that the quality of air carrier maintenance training varied throughout the industry, with some airlines doing an excellent job of training mechanics and other airlines providing mechanics with only minimal training.[136][37] Also, a 1998 FAA study of personnel training and qualifications at aviation maintenance facilities[137][38] found that, although airline mechanics reported that they were generally satisfied with the maintenance training provided by their companies, one area of concern involved informal OJT. Specifically, a significant number of mechanics indicated that they would prefer OJT that was more formal, with task objectives, checklists, and specific task signoffs. In addition, the FAA's 1998 *Guide for Human Factors in Aviation Maintenance and Inspection* (see section 1.18.3) stated that OJT had several positive aspects but that OJT practices were lax and tended to be unstructured.

The FAA's *Guide for Human Factors in Aviation Maintenance and Inspection* contained voluntary guidelines for developing structured OJT programs. However, air carriers are not currently required to follow these guidelines when developing OJT programs. The Safety Board concludes that it is important that air carrier OJT programs are developed in accordance with detailed guidance that emphasizes effective training practices. Therefore, the Safety Board believes that the FAA should develop detailed OJT requirements for 14 CFR Part 121 air carriers that rely on OJT as a maintenance training method. These requirements should include, but not be limited to, best practices, procedures, and methods for accomplishment and administration of this training. The Safety Board also believes that the FAA should ensure that these OJT requirements are incorporated into 14 CFR Part 121 air carrier maintenance training programs.

2.5.1.2.2 Maintenance Training Oversight

The Safety Board identified deficiencies in Air Midwest's oversight of its maintenance training program. First, because only one RALLC quality assurance inspector and one RALLC foreman (the backup quality assurance inspector) worked at HTS at the time of the accident, a SMART mechanic was appointed as foreman 4 nights per week (when the quality assurance inspector was not on duty and the foreman assumed the inspector's responsibilities). One of the foreman's responsibilities was to follow the progress of the mechanics in accomplishing the assigned maintenance work. However, the SMART mechanic who was the foreman on the night of January 6, 2003, had not completed OJT for the Beech 1900D.

[136] For more information, see National Transportation Safety Board, *Commuter Airline Safety*, Special Study NTSB/SS-94/02 (Washington, DC: NTSB, 1994).

[137] R.P. Goldsby and J. Watson, *Comparative Study of Personnel Training and Qualifications at Aviation Maintenance Facilities* (Washington, DC: Office of Aviation Medicine, FAA, 1998).

Second, according to Air Midwest's Maintenance Procedures Manual, the foreman was responsible for ensuring that OJT was provided to mechanics by someone other than the quality assurance inspector. However, the quality assurance inspector routinely provided OJT. In fact, the quality assurance inspector on duty on the night of January 6th stated that he had received most of his training at Mesa Airlines, Arctic Slope, and Air Midwest from inspectors and that he believed it was standard practice for inspectors to provide OJT. Also, the foreman stated that a quality assurance inspector had been providing OJT to mechanics since he began working for RALLC in December 2001.

The Air Midwest regional site manager was aware that inspectors were providing most of the OJT because he reviewed maintenance training records on a daily basis. However, the regional site manager should have been aware that this situation increased the inspector's workload (providing OJT and performing RII inspections) and did not separate maintenance and inspection tasks. The quality assurance inspector stated that the regional site manager never mentioned to him that inspectors should not provide OJT.

Last, according to Air Midwest's Maintenance Training Manual and Maintenance Procedures Manual, the regional site manager was responsible for maintaining training records and ensuring that the training was properly documented. As previously stated, the regional site manager reviewed maintenance training records daily, and he indicated that he attempted to have discrepancies corrected quickly. The regional site manager forwarded the training records to Air Midwest's Maintenance Training Coordinator in Wichita, who reviewed the records for completeness and accuracy. However, an FAA inspection conducted by geographic inspectors from the Charleston, West Virginia, Flight Standards District Office (FSDO) 2 days after the accident found that maintenance training records for employees at HTS were "not complete or current." Also, the Safety Board discovered numerous discrepancies in the training records of HTS maintenance personnel, including the following:

- The mechanic who performed the elevator control cable work had his training records signed as complete for the D6 aft fuselage/empennage inspection procedure and for "rudder, aileron, or elevator cable tension adjustment" by the quality assurance inspector. However, the mechanic had not been trained on the rudder and aileron rigging procedures. Air Midwest's maintenance training program considered mechanics to be fully trained on all three major control cable rigging procedures after the mechanics had received training on only one of the procedures, despite significant differences among the procedures.
- Another SMART mechanic and the primary quality assurance inspector incorrectly indicated on that mechanic's OJT record that he had completed training on the D6 aft fuselage/empennage inspection procedure on January 6th. The mechanic inspected and checked the engines but did not perform the entire D6 procedure, including the elevator check.
- The mechanics that were on duty on the night of January 6th had numerous items (dating as far back as December 14, 2002) signed as complete in their training records, but these items did not have the required instructor signature stamps.

- The foreman's training records indicated that he had received OJT for the detail 2 through detail 5 checks all on the same day. It is unrealistic for any mechanic to have completed OJT for all those tasks on a single day because one detail check generally takes an entire shift to complete.

Further, the Air Midwest principal maintenance inspector (PMI) stated that the FAA has had longstanding concerns with Air Midwest's management of its maintenance training program. These concerns included that mechanics received no formal (classroom) training, OJT records were not being properly maintained, no one was adequately monitoring the quality of the OJT provided, and the training was not consistent with guidelines set forth in Air Midwest's Maintenance Training Manual. Letters from the FAA to Air Midwest showed that, during a 2-year period beginning in October 2000, the FAA had encouraged Air Midwest to improve its maintenance training program (see section 2.5.2.1 for more information). However, evidence discovered during the investigation of the flight 5481 accident showed that deficiencies still existed in Air Midwest's maintenance training program.

The Safety Board concludes that Air Midwest did not ensure that its maintenance training was conducted and documented in accordance with the company's maintenance training program, which degraded the quality of training and inspection activities at the HTS maintenance station. Because of the numerous discrepancies in the training records of HTS maintenance personnel, the Safety Board believes that the FAA should audit training records for personnel who are currently performing maintenance on Air Midwest airplanes to verify that the training was properly accomplished in accordance with the company's Maintenance Procedures Manual and Maintenance Training Manual.

2.5.1.3 Continuing Analysis and Surveillance System Program

The Safety Board identified numerous deficiencies in Air Midwest's maintenance program during the investigation of the flight 5481 accident. These deficiencies included inadequate oversight of maintenance at the HTS maintenance station, poorly designed maintenance procedures, lack of adherence to maintenance procedures, inadequate inspection of accomplished maintenance, and poorly developed policies and procedures for training maintenance personnel. During the public hearing on this accident, the FAA's Technical Advisor for Aircraft Maintenance stated that Air Midwest's primary tool for detecting and correcting such deficiencies should have been its CASS program. However, FAA and Air Midwest documents indicated that deficiencies existed in Air Midwest's CASS program, which prevented it from fulfilling its intended purpose.

The FAA notified Air Midwest about CASS deficiencies several times, including the following:

- In a November 9, 2000, letter, the Air Midwest PMI stated that Air Midwest's CASS program did not include a reliable way of charting operational data at specified intervals to reveal trend-related information.
- A Regional Aviation Safety Inspection Program (RASIP) inspection, conducted between March 12 and 29, 2001, found that Air Midwest was not performing the biannual audits required by the company's CASS procedures.
- In a February 19, 2002, letter, the Air Midwest principal avionics inspector communicated his concern that Air Midwest's CASS program lacked an auditor training curriculum.
- In an April 26, 2002, letter, the Wichita FSDO manager and the Air Midwest PMI stated that Air Midwest had a written audit program but no dedicated program manager.
- In an August 19, 2002, letter, the Air Midwest PMI told Air Midwest that action was needed to ensure that the audit procedures contained in the company's audit manual were being followed.

Air Midwest's CASS program did not identify some maintenance training program deficiencies. For example, Air Midwest performed its first audit of the HTS maintenance station on November 5, 2002. One item on the Air Midwest maintenance station audit guide checklist was to determine whether proper training was being provided for new hires, training records were being kept up to date, and proper recurrent training was being provided. An Air Midwest auditor found that those areas were satisfactory; however, letters from the FAA to Air Midwest (described in sections 1.17.4.2 and 2.5.2.2) indicated that deficiencies in those areas existed and were well known to Air Midwest officials. Further, postaccident interviews, training records, public hearing testimony, and findings from an Air Midwest audit conducted 6 days after the accident indicated that maintenance training program deficiencies existed at HTS in the months before the accident.

Air Midwest's CASS program also did not correct deficiencies that were identified through company audits. For example, the November 2002 audit of HTS found that supervisory staffing was inadequate; specifically, HTS was only staffed with one quality assurance inspector and one foreman but should have been staffed with two quality assurance inspectors and two foremen. In a January 3, 2003, letter to the Air Midwest quality assurance auditor, the RALLC site manager indicated that staffing at HTS had increased 20 percent during the last month. During the public hearing on this accident, however, the RALLC site manager stated that no new quality assurance inspectors or foremen were hired during that period but that one mechanic was authorized to work as a foreman.

As stated in section 2.3.3, 14 CFR 121.373 required Air Midwest to have a CASS program and to correct deficiencies in its maintenance program identified through the CASS program, including deficiencies in its maintenance manuals. Air Midwest's Maintenance Procedures Manual stated that the company's Vice President/Director of Maintenance was responsible for ensuring compliance with requirements of the CASS

program and for ensuring that appropriate corrective actions were taken on issues identified through the CASS program. However, the Safety Board further questioned the effectiveness of Air Midwest's CASS program after the Board received a February 12, 2003, letter from the Air Midwest Vice President/Director of Maintenance. This letter stated, "a review of the Raytheon Aircraft Beech 1900D Maintenance Manual revealed a lack of explicit instructions, which if included, could have avoided the elevator mis-rigging." The letter also described numerous deficiencies in the elevator control system rigging procedure, including the following:

- Step d, which requires the removal of passenger seats, carpet, and floorboards on the right side of the passenger compartment to access the elevator control cable turnbuckles, was not required because the turnbuckles on the Beech 1900D model are located in the tail of the airplane.
- Steps f, g, h, i, and l did not include procedures for making adjustments to the push-pull tube, elevator control horn stop bolts, bob weight stop bolt, forward bellcrank stop bolts, and aft pushrods, respectively.
- Step q refers the mechanic to the elevator cable tension graph (figure 203) in section 27-30-02 for performing cable tensioning, but no instructions were given regarding whether the airframe, outside air, or cable temperature was to be taken when determining the amount of cable tension; whether the flight compartment cabin temperature gauge or an outside air temperature gauge was to be used in determining the temperature; and what type of device was to be used to measure cable tension.

Air Midwest and its predecessor companies had been operating Beech 1900D airplanes since the 1990s; as a result, it is highly unlikely that the maintenance manual deficiencies that Air Midwest identified in its February 2003 letter first came to light after the flight 5481 accident. Each of the deficiencies raised in the letter would have been apparent every time the elevator control system rigging procedure was accomplished. Thus, Air Midwest's CASS program was ineffective.

The Safety Board notes that the flight 5481 accident investigation is not the first time that problems have been found with an air carrier's CASS program. The Board's investigation of the January 31, 2000, Alaska Airlines flight 261 accident found that a postaccident FAA special inspection of the air carrier revealed deficiencies in its CASS program,[138] and the Board's final report on the accident concluded that "at the time of the flight 261 accident, Alaska Airlines' maintenance program had widespread systemic

[138] These deficiencies included that Alaska Airlines' manuals did not contain facsimiles of audit checklists to be used in administering its CASS program, data-gathering was periodic rather than continuous, and audit checklists did not address compliance with regulatory safety standards checklists but instead were modeled after a generic audit program that was not specifically designed for Alaska Airlines.

deficiencies."[139] (Section 2.5.2.2 discusses the results of an investigation conducted by the Department of Transportation Office of Inspector General in response to these findings.)

The Safety Board concludes that Air Midwest's CASS program was not being effectively implemented because it did not adequately identify deficiencies in the air carrier's maintenance program, including some that were found by the FAA before the flight 5481 accident.

2.5.1.4 Detail 6 Inspection Procedures Checklist

The Air Midwest D6 inspection procedures checklist (also known as the D6 work card) was the document that mechanics used for inspecting and adjusting elevator control cables. The work card referred the mechanics to the Beech 1900D AMM for additional details regarding the cable inspection and adjustments. The work card and the AMM contained general instructions to guide the mechanics in performing these tasks.

The D6 work card instructed mechanics to check cable tension according to Beech 1900D AMM chapter 27.[140] However, the D6 work card did not specifically refer the mechanics to section 27-30-02 of the AMM, which contained the only reference—an elevator cable tension graph—in chapter 27 for determining cable tension. Further, to use the graph, the mechanic was first required to determine cable temperature, but neither the D6 work card nor the elevator cable tension graph described how to prepare the airplane for temperature measurement or how and where to obtain temperature readings. The Safety Board's January 2003 ground tests showed that temperature readings varied depending on the method used by individual mechanics for measuring cable temperature and that the method used for measuring temperature could affect cable tension.

Interviews with Air Midwest and Raytheon Aircraft Company officials revealed that, when cable tension was found to be outside of acceptable parameters, mechanics were expected to perform the entire elevator control system rigging procedure. Neither the D6 work card nor the Beech 1900D AMM explicitly stated that the entire rigging procedure needed to be performed or that the elevator cable tension adjustment could not be accomplished as an isolated task.

---

[139] For more information, see National Transportation Safety Board, *Loss of Control and Impact With Pacific Ocean, Alaska Airlines Flight 261, McDonnell Douglas MD-83, N963AS, About 2.7 Miles North of Anacapa Island, California, January 31, 2000*, Aircraft Accident Report NTSB/AAR-02/01 (Washington, DC: NTSB, 2002).

[140] The only other details provided on the work card regarding elevator cable tensioning were blank lines on which a mechanic recorded the cable temperature and the number of pounds of tension for the ANU and AND cables (see figure 1 in section 1.1.1).

Maintenance procedures are developed and are expected to be followed to ensure that maintenance work is properly performed. When a maintenance procedure contains multiple steps that are not applicable to the airplane on which a mechanic is working,[141] a mechanic may decide to skip applicable steps. Although well-trained mechanics may be more capable of distinguishing between steps that are and are not applicable to a particular aircraft than mechanics with less training, maintenance procedures should be written so they minimize the possibility that any mechanic would need to make such distinctions. Errors can be made if applicable steps are skipped along with inapplicable steps, as demonstrated by the elevator control system maintenance on the accident airplane. Mechanics would be less likely to skip applicable steps and more likely to follow a maintenance procedure in its entirety if the procedure were well written.

The FAA has sponsored human factors research regarding the quality of maintenance procedures and instructions, and this research has found a link between the usability of maintenance procedures and the likelihood that mechanics will follow the procedures. For example, a 2002 survey[142] found that only 18 percent of mechanics thought that their organization's maintenance manual described the best way to perform a maintenance procedure. The survey also found that 62 percent of the mechanics had performed maintenance using methods that they considered to be better than those detailed in their organization's written procedures. The results of the survey suggest that the usability of work cards may be a factor affecting whether mechanics will adhere to their organization's accepted procedures when performing maintenance.

In its final report on the Emery Airlines flight 17 accident, the Safety Board determined that unclear maintenance work card instructions might have contributed to maintenance errors involved in that accident. The Board concluded that all air carriers should provide maintenance personnel with more detailed information regarding the steps or actions that are necessary to satisfactorily accomplish a maintenance task. Also, the Board issued Safety Recommendation A-03-31, which asked the FAA to "require all 14 CFR Part 121 air carrier operators to revise their task documents and/or work cards to describe explicitly the process to be followed in accomplishing maintenance tasks."

The mechanics' failure to follow the general guidance provided on Air Midwest's D6 work card and in the Beech 1900D AMM supports the need for the actions recommended in Safety Recommendation A-03-31. However, Safety Recommendation A-03-31 focused only on the role of the air carrier in revising work cards and did not consider the safety benefit of involving the aircraft manufacturer in the process of reviewing and revising maintenance procedures. Placing this responsibility solely on air carriers raises the possibility that individual carriers could identify deficiencies in flight-critical

[141] Three steps in section 27-30-02 were not applicable to the accident airplane. Two steps pertained to the autopilot, but the airplane was not equipped with an autopilot. One step pertained to the removal of passenger seats and passenger cabin floorboards, but the airplane's elevator cable turnbuckles were not located beneath those components.

[142] A. Chaparro, and L.S. Groff, "Human Factors Survey of Aviation Maintenance Technical Manuals," *Proceedings of the 16th Human Factors in Aviation Maintenance Symposium* (Washington, DC: FAA, 2002).

maintenance procedures but fail to share this information with other air carriers that operate the same airplane. If aircraft manufacturers were involved in the process of reviewing and revising maintenance procedures, safety information would more likely be shared among air carriers.

In addition, the flight 5481 accident demonstrated that the usability of aircraft maintenance manuals is as important to safety as the usability of work cards, but Safety Recommendation A-03-31 did not address the added safety benefit of revising procedures contained in aircraft maintenance manuals. As a result, the Safety Board classifies Safety Recommendation A-03-31 "Closed—Superseded."

The Safety Board concludes that accurate and usable work cards developed jointly by air carriers and aircraft manufacturers would improve the performance of maintenance for critical flight systems. Therefore, the Safety Board believes that the FAA should require 14 CFR Part 121 air carriers to implement a program in which carriers and aircraft manufacturers review all work card and maintenance manual instructions for critical flight systems and ensure the accuracy and usability of these instructions so that they are appropriate to the level of training of the mechanics performing the work.

2.5.2 Federal Aviation Administration

2.5.2.1 Oversight of Air Midwest

The Air Midwest PMI had identified several deficiencies in the air carrier's maintenance training program during the 2 years before the accident. These deficiencies included inadequate oversight of training, inadequate record-keeping, inadequate training procedures, and lack of adherence to company training procedures. In letters to Air Midwest, the FAA expressed its concerns and urged the air carrier to improve. For example, in an October 16, 2000, letter, the Air Midwest PMI stated that a recent FAA inspection conducted at Air Midwest headquarters could not be completed because the air carrier lacked adequate records to determine whether it was in compliance with 14 CFR 121.371 and 121.375.[143] Specifically, the PMI noted that required maintenance training records were either not at company headquarters or were not up to date and complete. A followup inspection of Air Midwest's training files was conducted on December 4, 2000. This inspection revealed evidence of continuing deficiencies in the air carrier's training records as well as deficiencies in its training manual. The PMI gave Air Midwest a deadline of February 1, 2001, to remedy these deficiencies.

The FAA's March 2001 RASIP inspection found that deficiencies still existed in the maintenance training manual and that training was not being conducted in accordance with company procedures. Specifically, the inspection found that Air Midwest did not have adequate procedures for verifying the experience of new hires,[144] information in the

[143] Title 14 CFR 121.371 requires, among other things, that air carriers use only properly trained personnel for performing required inspections. Title 14 CFR 121.375 requires air carriers to have a training program that ensures that each person is fully informed about procedures, techniques, and new equipment and is competent to perform applicable duties.

maintenance training manual was inconsistent and obsolete, mechanics were not completing OJT within the company's 2-year time limit,[145] and training was not being properly documented.

During the next year, discussions between the FAA and Air Midwest continued regarding the adequacy of the air carrier's training manuals and the completion of required training for its maintenance personnel. In an April 26, 2002, letter, the Wichita FSDO manager and the Air Midwest PMI notified Air Midwest that the FAA intended to delay the air carrier's planned expansion to its route structure because of unresolved concerns, including the air carrier's CASS and maintenance training programs. The planned route expansion related to a 2-year contract awarded in July 2002 by the Department of Transportation to Mesa Air Group (Air Midwest's parent company) for seven new essential air service markets in Arkansas, Oklahoma, and Texas. The new markets included Enid and Ponca City, Oklahoma; Brownwood, Texas; and Harrison, Hot Springs, El Dorado/Camden, and Jonesboro, Arkansas. The air service was to be provided beginning in the fall of 2002 by Air Midwest doing business as Mesa Airlines, and four Beech 1900D airplanes were dedicated to the new routes. Mesa Air Group would receive a federally guaranteed subsidy of $13.4 million for providing air service during the 2-year term of the contract.

As of August 2002, the Air Midwest PMI and principal operations inspector had still planned to delay the expansion; however, an FAA operations supervisor advised them against the delay. The Safety Board is concerned that, even though deficiencies in Air Midwest's maintenance training program were clearly documented by the FAA in its letters to the air carrier, the FAA did not use Air Midwest's subsidized route expansion as leverage to effect improvements in the carrier's maintenance training program.

The FAA could also have insisted that Air Midwest improve its maintenance training program before allowing the air carrier to open the HTS maintenance station in July 2002. The Safety Board's investigation into the flight 5481 accident found that HTS had the same persistent problems that had been identified at other Air Midwest maintenance stations, including the poor quality of OJT. This problem is especially evident in the training records of the HTS mechanic who examined and adjusted the elevator control system on the accident airplane. Specifically, on January 7, 2003, the mechanic was signed off on the entire D6 aft fuselage/empennage inspection procedure, even though he clearly received none of the orientation, demonstration, practice, evaluation, and closure that FAA's guidelines for OJT recommended. In addition, the mechanic performed the elevator control system adjustment incorrectly, and he did not perform any of the other tasks associated with the D6 maintenance check.

The Safety Board notes that the flight 5481 accident investigation is the not first time that the FAA was unable or unwilling to follow the judgment of its aviation safety inspectors. In its final report on the ValuJet Airlines flight 592 accident, the Board

[144] This finding was the only one cited by the RASIP inspection team as a FAR violation.

[145] This requirement was replaced in the February 2002 revision of Air Midwest's maintenance training manual with a requirement stating that a mechanic would not be assigned work until OJT was accomplished.

criticized the FAA for its failure to act on its inspectors' concerns about that air carrier and found that the FAA's inability to provide adequate oversight of ValuJet and its maintenance contractors contributed to the cause to the accident.

It is critical that proper FAA oversight is provided for every air carrier maintenance training program to ensure that any program deficiencies are identified. It is even more critical for the FAA to forcefully pursue maintenance training program improvements when deficiencies have been identified. The Safety Board concludes that the FAA's failure to aggressively pursue the serious deficiencies in Air Midwest's maintenance training program that were previously and consistently identified permitted the practices that prevailed at the HTS maintenance station and during the accident airplane's D6 maintenance check.

2.5.2.2 Oversight of Continuing Analysis and Surveillance System Programs

The FAA developed the requirement for air carrier CASS programs so that the carriers would have internal quality control systems to reduce safety hazards and improve operational performance. However, the regulation requiring air carrier CASS programs—14 CFR 121.373—did not describe program requirements in detail. The primary CASS program guidance that was in effect at the time of the flight 5481 accident was contained in FAA AC 120-16C, "Continuing Airworthiness Maintenance Programs," and was less than 1 page in length.

After the Alaska Airlines flight 261 accident and the FAA's postaccident inspection of the air carrier, the Department of Transportation Office of Inspector General conducted an investigation of the FAA's oversight of CASS programs. The office's December 12, 2001, report on the investigation stated that the findings of the FAA's postaccident inspection raised questions regarding why the FAA's routine surveillance had not identified deficiencies in Alaska Airlines' CASS program and ensured that they were corrected. The report also stated that the FAA "placed limited emphasis on CASS in its oversight" and recommended that the FAA improve CASS program oversight and expand existing program guidance to better describe what an effective CASS program should include.[146] In its comments on a draft of the report (dated October 4, 2001), the FAA agreed, among other things, to revise existing guidance for CASS development and implementation, conduct annual CASS inspections, develop CASS training for inspectors, and require that all inspectors be trained by January 2004.

In March 2003, the FAA revised AC 120-16C. The revised AC (AC 120-16D) presented expanded CASS guidance in a dedicated chapter that was several pages in length. The guidance indicated that an air carrier's CASS program should detect and correct air carrier maintenance program deficiencies through a closed-loop, continuous cycle of surveillance and investigations, data collection and analysis, corrective actions, and monitoring and feedback.

---

[146] U.S. Department of Transportation, Office of the Secretary of Transportation, Office of Inspector General, *Oversight of Aircraft Maintenance, Continuing Analysis and Surveillance Systems, Federal Aviation Administration* (Washington, DC: Department of Transportation, 2001).

AC 120-16D stated that an air carrier's CASS program should monitor nine elements of the carrier's continuous airworthiness maintenance program, including its maintenance manual. The guidance also stated that a CASS program should include "detailed policy and procedures" for determining whether an air carrier needed to amend its maintenance program or manual and for making such amendments. In addition, the guidance stated, "proactive surveillance and analysis forecasts faults in your [the air carrier's] maintenance program or manual through the collection and analysis of a wide variety of data. It corrects those faults, including human factors issues, in advance of any specific event, accident, or incident." Further, the guidance stated that an air carrier's "CASS audit schedule should include...all manuals, publications, and forms [to ensure that they] are useable, current, accurate, and readily available to the user."

In April 2003, the FAA published AC 120-79, "Developing and Implementing a Continuing Analysis Surveillance System," which was a comprehensive guide for the development of CASS programs. The AC provided information on many CASS-related topics and described model CASS programs for air carriers in three different size ranges.

The Safety Board commends the FAA for issuing improved, detailed guidance for the development and implementation of CASS programs. However, the FAA has not yet included this guidance in FAA Order 8300.10, *Airworthiness Inspector's Handbook.*[147] Also, the FAA has not completed the development of CASS training for aviation safety inspectors. The Board notes that, on January 26, 2004, the FAA provided the Board with the draft lesson plan for the CASS portion of an air carrier indoctrination course that is to be taught to all new inspectors.[148] The Board hopes that the FAA will complete the development of CASS training and begin training aviation safety inspectors as soon as possible.

The Safety Board concludes that updated CASS guidance would help FAA aviation safety inspectors ensure that CASS programs are being effectively implemented at 14 CFR Part 121 air carriers. Therefore, the Safety Board believes that the FAA should include the CASS guidance from AC 120-16D, "Continuing Airworthiness Maintenance Programs," and AC 120-79, "Developing and Implementing a Continuing Analysis Surveillance System," in FAA Order 8300.10, *Airworthiness Inspector's Handbook.*

2.5.2.3 Oversight of Maintenance Training Programs

The Safety Board notes that, in contrast to other air carrier training programs, such as those for pilots, flight attendants, dispatchers, flight instructors, check airmen, and personnel handling hazardous materials,[149] maintenance training programs do not require formal approval by the FAA. For those training programs that require formal approval, the air carrier submits its program plans to the FAA, which reviews those plans and either

[147] Inspector guidance on the CASS program is currently found in volume 2, chapter 65, and volume 3, chapter 37, of the handbook. These handbook sections were developed in 1992 and 1993, respectively.

[148] The FAA reported that the initial indoctrination course was taught during the week of January 12, 2004.

[149] See 14 CFR 121.401, "Training Program: General."

approves them in writing or sends them back to the carrier for revision and resubmission. FAA staff indicated that managing the content of, and ensuring compliance with, air carrier training programs that are not approved (such as maintenance training programs) can be more difficult than for programs that are approved. As a result, the FAA's oversight of maintenance training programs may not be as effective as its oversight of air carrier training programs that are required to be approved.

The Safety Board concludes that, because proper aircraft maintenance is crucial to safety, air carrier maintenance training programs should be subject to the same standard that exists for other air carrier training programs (that is, FAA approval). Therefore, the Safety Board believes that the FAA should require that all 14 CFR Part 121 air carrier maintenance training programs be approved.

2.5.2.3.1 Programs to Reduce Human Error in Aircraft Maintenance

The FAA's research program on human factors in aviation maintenance has primarily resulted in the publication of guidance material and the promotion of voluntary human factors programs for the aviation industry. The Safety Board commends the FAA for its efforts to address issues related to human factors in aviation maintenance. However, major maintenance-related airplane accidents in the United States during the past decade (see section 1.18.4) suggest that the guidance for voluntary human factors programs may be insufficient to prevent accidents resulting from human error in aviation maintenance.

The Safety Board concludes that the lessons learned by the FAA through its human factors research program need to be used to develop mandatory programs to prevent human error in aviation maintenance. Therefore, the Safety Board believes that the FAA should require that 14 CFR Part 121 air carriers implement comprehensive human factors programs to reduce the likelihood of human error in aviation maintenance.

2.5.2.4 Oversight of Weight and Balance Programs

As stated in section 2.4.1, flight 5481 clearly exceeded the Beech 1900D certified weight limit of 17,120 pounds and aft CG limit of 40 percent MAC, even though the flight crew adhered to Air Midwest's weight and balance program in effect at the time of the accident. In addition, even Air Midwest's revised weight and balance program could result, in certain conditions, in an airplane operating with an unacceptably aft CG position.

The Air Midwest weight and balance procedures used by the flight crew were based on the use of average weights for the flight crewmembers, crew baggage, passengers, personal items, carry-on baggage stored in the cabin, checked baggage, and carry-on baggage checked at the airplane and stored in the AFT1 cargo compartment. The Air Midwest average passenger and checked baggage weight values were consistent with the FAA guidance detailed in AC 120-27C, "Aircraft Weight and Balance Control," and Flight Standards Handbook Bulletin for Airworthiness 95-14 and Flight Standards Handbook Bulletin for Air Transportation 95-15, "Adherence to Advisory Circular 120-27C, 'Aircraft Weight and Balance Control.'" However, as demonstrated by the flight 5481 accident, these values did not ensure that the airplane would be operating within its certified weight and CG envelope.

Wreckage evidence indicated that 4 of the 31 bags aboard flight 5481 weighed more than 50 pounds. None of these bags were formally recorded on any of the flight's paperwork. The heaviest of the four bags weighed 69 pounds, 44 pounds more than the 25-pound average weight value attributed to it for weight and balance purposes. Although the Director of US Airways Express Training stated, in a postaccident interview, that any bag weighing up to 70 pounds was accounted for under the average baggage weight program, the program underestimated the average weight of each of the 31 bags by 4 pounds and, thus, the total baggage weight by at least 124 pounds.

AC 120-27C permits air carriers to assign the FAA's standard weight value (25 pounds) for each checked bag. The AC, however, does not provide guidance to air carriers regarding what weight cutoff should be used to avoid weight and balance errors resulting from heavy bags. In addition, flight crews, gate agents, and baggage handlers have only minimal guidance on how to recognize situations that necessitate the use of actual rather than average baggage weights.

The average weight of passengers aboard flight 5481 was 185 pounds, 10 pounds more than the 175-pound average weight value attributed to each passenger. Of the 19 passengers aboard the accident flight, 16 (about 84 percent) were male, and 3 (about 16 percent) were female. AC 120-27C stated that the standard average passenger weights "cannot be arbitrarily adopted for operations with passenger groups that appreciably differ from the basis or where the mix of male and female passengers is known to be different than a 60 percent male/40 percent female operation." However, neither the FAA's guidance nor Air Midwest's weight and balance program identified specific nonstandard passenger weight cues or thresholds to indicate when to use actual rather than average passenger weights.

The Safety Board concludes that the use of average weights does not necessarily ensure that an aircraft will be loaded within its weight and CG envelope. Therefore, the Safety Board believes that the FAA should identify those situations that would require the use of actual instead of average weights in weight and balance computations and should incorporate this information into AC 120-27, "Aircraft Weight and Balance Control."

2.5.2.4.1 Approval of Air Midwest's Weight and Balance Program

On April 9, 2001, the Air Midwest PMI approved the weight and balance procedures contained in the air carrier's operations specifications at the time of the accident. However, the PMI approved Air Midwest's weight and balance program without first validating the program. During the public hearing for this accident, an FAA air safety investigator from the Air Carrier Operations Branch stated that air carriers were responsible for evaluating the program's impact on weight and balance. The air safety investigator also stated that the air carrier was responsible for ensuring that its weight and balance program complied with the manufacturer's limitations and that the FAA was responsible for promoting safety and providing oversight.

According to the Air Midwest PMI, oversight of the air carrier's weight and balance program occurred only during en route inspections, when an inspector would

check the cargo bin, count the number of bags, and look at the size of the bags and then compare the findings with the information on the load manifest. If the FAA had provided effective oversight by performing a survey to determine the average passenger and baggage weights, it would have realized that these weights were significantly different from the average passenger and baggage weights in Air Midwest's program and in AC 120-27C. For example, FAA Notice 8400.40, which was issued less than 3 weeks after the flight 5481 accident, required 14 CFR Part 121 air carriers with 10- to 19-passenger seat airplanes and average weight programs (including Air Midwest) to survey passenger and baggage weights. The survey results showed that the average adult passenger, average carry-on baggage, and average checked baggage weights were greater than the average weights included in AC 120-27C by almost 21, 6, and 4 pounds, respectively. As a result, all 15 operators that were required to participate in the survey had to adjust the weights in one or more categories of their average weight program by 5 to 25 percent.[150]

It is very likely that, if the FAA had conducted such a survey in 2001 before approving Air Midwest's weight and balance program, the FAA could have easily discovered that the average weight assumptions in its weight and balance program guidance were flawed. Thus, the Safety Board concludes that the FAA's average weight assumptions in AC 120-27C, "Aircraft Weight and Balance Control," were not correct.

As demonstrated by the results of the FAA Notice 8400.40 survey, periodic sampling can easily identify and track changing trends in passenger or baggage weights. Periodic sampling of passenger and baggage weights can also identify and track regional, seasonal, or passenger demographic variances that may result in loadings that are significantly different from those based on average weights. In addition, periodic sampling can identify and track those aircraft or routes that carry passengers or baggage with weights that are significantly different from the average weights. Analysis of the survey results would provide a sound basis for future adjustments to average weights so that they would more closely reflect actual passenger and baggage loads.

The Safety Board concludes that periodic sampling of passenger and baggage weights would determine whether air carrier average weight programs were accurately representing passenger and baggage loads. Therefore, the Safety Board believes that, unless an actual weight program is developed and implemented, the FAA should establish a weight and balance program that requires 14 CFR Part 121 air carriers to periodically sample passenger and baggage weights and determine appropriate statistical distribution characteristics for regional, seasonal, demographic, aircraft, and route variances. In addition, the Safety Board believes that the FAA should establish a program to periodically review 14 CFR Part 121 air carrier weight and balance data to ensure that regional, seasonal, demographic, aircraft, and route trends among carriers are valid. Further, the Safety Board believes that the FAA should require 14 CFR Part 121 air carriers to retain all survey data and products, as well as documentation of the methodology used to justify their average weight programs, and should audit these data as necessary.

[150] Recent international survey data (see section 1.18.6.3) substantiate the trend of increasing passenger and carry-on baggage weights.

2.5.2.4.2 Use of Average Weights

The Safety Board is concerned that air carrier average weight programs do not generally account for variances in passenger and baggage weights and weight distribution.[151] As a result, it is possible for a flight crew to mistakenly determine that an airplane is within its certified weight and CG envelope when the airplane is actually outside the envelope. The use of a predetermined average weight assumes that, although an individual passenger or bag may weigh more or less than the average weight, the variance will be appropriately distributed throughout an aircraft. However, deviations from the average weight value and average weight distribution can negatively affect an aircraft's CG if the heavier passengers and baggage are not appropriately distributed. Further, it is possible that some airplane types may be more susceptible than others to errors in CG loading. Specifically, the FAA air safety investigator from the Air Carrier Operations Branch stated, during public hearing testimony, "aircraft that have a larger seating capacity have the ability to spread the deviation from standard across a larger population. So...aircraft with...a smaller seating capacity could have...a greater chance for error than a larger aircraft."

Several factors besides aircraft type (including region of travel, season, passenger mix, number of bags, and amount of personal items) can influence the accuracy of average weight assumptions, and no current method of calculating passenger and baggage weights can ensure, with 100-percent certainty, that an airplane's loading will not exceed its certified weight and CG limits. An airplane's susceptibility of operating outside its weight and CG limits could be minimized if additional safety margins were determined and factored into weight and balance calculations.

The Safety Board concludes that the current safety margins in air carrier average weight and balance programs do not ensure that aircraft will be loaded within their manufacturer-certified and FAA-approved weight and CG envelope. Therefore, the Safety Board believes that the FAA should require 14 CFR Part 121 air carriers that use average weight and balance programs to develop and implement weight and CG safety margins to account for individual passenger and baggage variances.

2.5.2.4.3 Technological Advances

As a result of its findings from the August 7, 1997, Fine Airlines flight 101 accident (see section 1.18.4.3), the Safety Board issued Safety Recommendation A-98-49 in July 1998. Safety Recommendation A-98-49 asked the FAA to evaluate and, if warranted, require the installation of a system that provides a cockpit display of weight and balance information for transport-category cargo airplanes. One such system at the time was the Sum Total Aft and Nose system (commonly referred to as the "STAN" system), which derived weight and balance information from pressure transducers on the main gear and nose gear shock struts. The FAA evaluated onboard weight and balance systems and found that the existing systems could not meet the reliability and accuracy standards for a mandatory system (because of unresolved operational challenges such as

[151] The average passenger, checked baggage, and carry-on baggage weights suggested by the FAA in AC 120-27C also do not consider weight variances and weight distribution variances.

wind, ramp slope, oleo stiction, low hydraulic pressure, and asymmetrical gear loads). Thus, the Safety Board classified Safety Recommendation A-98-49 "Closed—Acceptable Action."

The Safety Board is aware of current efforts in private industry to develop aircraft onboard weight and balance systems. In fact, the FAA's Aircraft Weight and Balance Control Program Aviation Rulemaking Committee is considering adding onboard weight and balance system certification specifications to the guidance in the next version of AC 120-27 (AC 120-27D). The Board is also aware of efforts to develop systems to rapidly weigh and automatically track passenger and baggage weight and location data as passengers board aircraft. Technological advances in hand-held computing devices, wireless bar code scanners, inventory tracking algorithms, and overnight package shipping logistics suggest that it may be feasible to compile actual weight data and account for the weight location, enabling a rapid and reliable calculation of actual aircraft weight and balance.

The Safety Board concludes that technology may enable air carriers to accurately determine weight and effectively control balance while maintaining operational efficiency. Therefore, the Safety Board believes that FAA should conduct or sponsor research to develop systems that are capable of delivering actual aircraft weight and balance data before flight dispatch. These systems should rapidly provide accurate and reliable weight and balance data. The Safety Board further believes that FAA should promote the use of systems that deliver accurate weight and balance data as a preferred alternative to the use of average weight and balance programs.

2.5.3 Raytheon Aircraft Company

During its investigation into the Air Midwest and Colgan Air accidents and the CommutAir incident, the Safety Board identified several areas in the Beech 1900D AMM (which each operator used as the basis for its maintenance work) that could be improved to help mechanics follow each step completely and accomplish procedures correctly.

Regarding the Air Midwest accident, the elevator cable tension graph (figure 203) in the elevator control system rigging procedure did not contain instructions on how to take a temperature reading, which was needed to determine the tension values at which the cables should be set. Regarding the Colgan Air accident, the elevator trim system rigging procedure showed an incorrect illustration of the forward elevator trim cable drum. This error could have resulted in the incorrect installation of the elevator trim cable and elevator tab operation in the direction opposite of that commanded by the trim wheel. Regarding the CommutAir incident, the Beech 1900D AMM did not contain a procedure for replacing a thrust lever detent pin.[152]

[152] Because the AMM did not contain this procedure, the mechanic used the installation instructions in a Beech 1900D field service kit for "thrust lever, replaceable detent pin." However, the installation instructions did not describe how to remove the thrust lever control assembly from the center pedestal, which is required to replace a thrust lever detent pin. Also, the installation instructions did not provide any references to specific maintenance manual sections or procedures for removing the thrust lever control assembly from the center pedestal.

The Safety Board notes that Beech 1900 series airplanes have been in service since 1984 and have accumulated about 11 million flight hours without significant problems with the AMMs.[153] However, the three recent events involving Beech 1900D airplanes raise concerns that the Beech 1900 series AMMs may no longer be adequate in the current air carrier maintenance environment (less experienced mechanics, an increased prevalence of contracting out maintenance work, and an increased number of startup operations).

On December 10, 2003, the President of Raytheon Airline Aviation Services met with the Safety Board to discuss Beech 1900 maintenance initiatives. On December 16, 2003, the Raytheon official sent the Board a facsimile detailing the initiatives the company would be taking to help Beech 1900 operators "achieve the best possible maintenance and safety practices." The facsimile stated, among other things, that Raytheon Airline Aviation Services would be "developing easy-to-follow text and illustrations designed to improve the explanation of certain procedures, including flight control rigging and functional testing, which are then subject to 'validation and verification.'" The facsimile also stated that Raytheon would issue these changes as temporary revisions to its Beech 1900 series AMMs.

Because the three recent events involving Beech 1900D airplanes demonstrated that mechanics for the three operators did not adequately perform their duties, the Safety Board concludes that Beech 1900 mechanics would benefit from using AMMs with more specific instructions for critical flight system procedures. Therefore, the Safety Board believes that the FAA should ensure that Raytheon Aircraft Company revises the maintenance procedures for critical flight systems in its Beech 1900, 1900C, and 1900D AMMs to ensure that the procedures can be completely and correctly accomplished.

2.6 Cockpit Voice Recorders Installed in Beech 1900 Series Airplanes

Before the flight 5481 accident, Beech 1900 series airplanes had experienced problems with the low signal volume of very high frequency (VHF) radio messages that were recorded by CVRs installed on the airplanes. As a result, the Safety Board issued Safety Recommendation A-97-36 on May 22, 1997. Safety Recommendation A-97-36 asked the FAA to require the inspection of CVRs aboard Beech 1900 airplanes and ensure that the operator take corrective actions so that the intelligibility of recorded communications was as high as practicable.

Raytheon Aircraft Company issued Service Bulletin (SB) 23-3094, which recommended the incorporation of an improved CVR amplifier and new circuitry for the wiring. Subsequently, the FAA issued AD 2000-20-07, which required that all applicable Beech 1900 airplanes comply with Raytheon Aircraft's SB. On January 30, 2001, the Safety Board classified Safety Recommendation A-97-36 "Closed—Acceptable Action."

[153] The Safety Board's accident and incident database included two Beech 1900 events in which inadequate maintenance manual procedures were part of the probable cause. For information about these events, see MIA00IA266 and NYC00IA150 on the Safety Board's Web site.

The accident airplane's maintenance records indicated that the actions required by the AD were accomplished on March 3, 2001. However, the volume of the incoming VHF radio messages during the accident flight was extremely low compared with the volume of the audio captured by the flight crew's hot microphones. Because the audio from the captain's, or first officer's, hot microphone was recorded on the same channel as the audio from the VHF radio, the two audio signals could not be isolated from each other on the recording.

On August 29, 2002, the Safety Board issued Safety Recommendation A-02-25 as a result of its longstanding concerns about the availability of CVR information after reportable accidents or incidents. Safety Recommendation A-02-25 asked the FAA to

> Require that all operators of airplanes equipped with a cockpit voice recorder (CVR) test the functionality of the CVR system prior to the first flight of each day, as part of an approved aircraft checklist. This test must be conducted according to procedures provided by the CVR manufacturer and shall include, at a minimum, listening to the recorded signals on each channel to verify that the audio is being recorded properly, is intelligible, and is free from electrical noise or other interference.

On December 12, 2002, the FAA stated current regulations (14 CFR 23.1457 and 25.1457) require CVR equipment to have "an aural or visual means for preflight checking of the recorder for proper operation." The FAA also stated that it would survey current maintenance practices of air carrier and general aviation aircraft to determine if corrections to the operators' maintenance programs were necessary to ensure expected recorder reliability. On January 16, 2003, the Safety Board stated its concern that that the FAA's maintenance survey would address only one part of the CVR reliability problem. The Board's safety recommendation letter stressed that it was the flight crew's responsibility to check the CVR for proper operation each day before the first flight; consequently, the Board encouraged the FAA to include maintenance procedures and crew checklist operational procedures in its survey.

The Safety Board was concerned that the FAA might have misunderstood the portion of the recommendation concerning a daily test of the equipment. Even though the FAA stated that 14 CFR 23.1457 and 25.1457 required CVR equipment to have "an aural or visual means for preflight checking of the recorder for proper operation," the Board stated that it was unaware of any CVR installations that did not have the ability to monitor the audio using a headphone jack in the cockpit. The Board indicated that the intended minimum for the daily test outlined in the safety recommendation would be similar to the procedures outlined in FAA Order 8300.10, Chapter 143, "Monitor Cockpit Voice Recorders." This chapter states, among other things, to "check all channels to ensure that the quality of the reproduction has not deteriorated below an optimal audible level."[154] The Board urged the FAA to ensure that a similar check is required before the first flight of the day in all aircraft equipped with a CVR. Pending full implementation of this

[154] The Safety Board's letter also cited an example of a required daily check in the FAA's Flight Standards Information Bulletin for Airworthiness 99-04. The bulletin indicated that the Beech 1900C Airplane Flight Manual contained a preflight inspection by the flight crew, which included monitoring the area microphone.

requirement, Safety Recommendation A-02-25 was classified "Open—Acceptable Response."

Because the captain and the first officer's audio panel information was fair to poor quality with respect to the audio captured from the airplane's VHF radio systems, it is possible that important CVR information from flight 5481 might not have been transcribed if the audio information from the captain's and the first officer's hot microphones had not been excellent to good quality. The Safety Board concludes that, because the CVR can be one of the most valuable tools used for accident investigation, reliable daily test procedures are needed to safeguard CVR data. Therefore, the Safety Board reiterates Safety Recommendation A-02-25.

3. Conclusions

3.1 Findings

1. The captain and the first officer were properly certificated and qualified under Federal regulations. No evidence indicated any preexisting medical or behavioral conditions that might have adversely affected their performance during the accident flight. Flight crew fatigue was not a factor in this accident.

2. The accident airplane was properly certified and equipped in accordance with Federal regulations. Except for the elevator control system, no evidence indicated that the airplane was improperly maintained. The recovered components showed no evidence of any preexisting structural, engine, or systems failures.

3. Weather was not a factor in this accident. The air traffic controllers that handled the accident flight were properly trained and provided appropriate air traffic control services. The emergency response for this accident was timely and effective. The accident was not survivable for the airplane occupants because they were subjected to impact forces that exceeded the limits of human tolerance.

4. The accident airplane entered the detail six maintenance check with an elevator control system that was rigged to achieve full elevator travel in the downward direction.

5. The accident airplane's elevator control system was incorrectly rigged during the detail six maintenance check, and the incorrect rigging restricted the airplane's elevator travel to 7° airplane nose down, or about one-half of the downward travel specified by the airplane manufacturer.

6. The changes in the elevator control system resulting from the incorrect rigging were not conspicuous to the flight crew.

7. The Raytheon Aerospace quality assurance inspector did not provide adequate on-the-job training and supervision to the Structural Modifications and Repair Technicians mechanic who examined and incorrectly adjusted the elevator control system on the accident airplane.

8. Because the Raytheon Aerospace quality assurance inspector and the Structural Modifications and Repair Technicians mechanic did not diligently follow the elevator control system rigging procedure as written, they missed a critical step that would have likely detected the misrig and thus prevented the accident.

9. A complete functional check at the end of maintenance for critical flight systems or their components would help to ensure their safe operation, but no such check is currently required.

10. Flight 5481 had an excessive aft center of gravity, which, combined with the reduced downward elevator travel resulting from the incorrect elevator rigging, rendered the airplane uncontrollable in the pitch axis.

11. Air Midwest's weight and balance program at the time of the accident was not correct and resulted in substantially inaccurate weight and balance calculations for flight 5481.

12. Air Midwest's revised weight and balance program is also unacceptable because it may result in an inaccurate calculation of an airplane's center of gravity position.

13. Air Midwest did not adequately oversee the work performed by Raytheon Aerospace and Structural Modifications and Repair Technicians personnel at its Huntington, West Virginia, maintenance station and did not ensure that the accident airplane was returned to service in an airworthy condition.

14. When an inspector provides on-the-job training for a required inspection item (RII) maintenance task and then inspects that same task, the independent nature of the RII inspection is compromised.

15. Air carriers that use contractors to perform required inspection item maintenance tasks and inspections need to provide substantial and direct oversight during each work shift to ensure that this work is being properly conducted.

16. Air Midwest did not have maintenance training policies and procedures in place to ensure that each of its maintenance stations had an effective on-the-job training program.

17. It is important that air carrier on-the-job training programs are developed in accordance with detailed guidance that emphasizes effective training practices.

18. Air Midwest did not ensure that its maintenance training was conducted and documented in accordance with the company's maintenance training program, which degraded the quality of training and inspection activities at the Huntington, West Virginia, maintenance station.

19. Air Midwest's Continuing Analysis and Surveillance System program was not being effectively implemented because it did not adequately identify deficiencies in the air carrier's maintenance program, including some that were found by the Federal Aviation Administration before the flight 5481 accident.

20. Accurate and usable work cards developed jointly by air carriers and aircraft manufacturers would improve the performance of maintenance for critical flight systems.

21. The Federal Aviation Administration's failure to aggressively pursue the serious deficiencies in Air Midwest's maintenance training program that were previously and consistently identified permitted the practices that prevailed at the Huntington, West Virginia, maintenance station and during the accident airplane's detail six maintenance check.

22. Updated Continuing Analysis and Surveillance System (CASS) guidance would help Federal Aviation Administration aviation safety inspectors ensure that CASS programs are being effectively implemented at 14 *Code of Federal Regulations* Part 121 air carriers.

23. Because proper aircraft maintenance is crucial to safety, air carrier maintenance training programs should be subject to the same standard that exists for other air carrier training programs (that is, Federal Aviation Administration approval).

24. The lessons learned by the Federal Aviation Administration through its human factors research program need to be used to develop mandatory programs to prevent human error in aviation maintenance.

25. The use of average weights does not necessarily ensure that an aircraft will be loaded within its weight and center of gravity envelope.

26. The Federal Aviation Administration's average weight assumptions in Advisory Circular 120-27C, "Aircraft Weight and Balance Control," were not correct.

27. Periodic sampling of passenger and baggage weights would determine whether air carrier average weight programs were accurately representing passenger and baggage loads.

28. Current safety margins in air carrier average weight and balance programs do not ensure that aircraft will be loaded within their manufacturer-certified and Federal Aviation Administration-approved weight and center of gravity envelope.

29. Technology may enable air carriers to accurately determine weight and effectively control balance while maintaining operational efficiency.

30. Beech 1900 mechanics would benefit from using Airliner Maintenance Manuals with more specific instructions for critical flight system procedures.

31. Because the cockpit voice recorder (CVR) can be one of the most valuable tools used for accident investigation, reliable daily test procedures are needed to safeguard CVR data.

3.2 Probable Cause

The National Transportation Safety Board determines that the probable cause of this accident was the airplane's loss of pitch control during takeoff. The loss of pitch control resulted from the incorrect rigging of the elevator control system compounded by the airplane's aft center of gravity, which was substantially aft of the certified aft limit.

Contributing to the cause of the accident were (1) Air Midwest's lack of oversight of the work being performed at the Huntington, West Virginia, maintenance station; (2) Air Midwest's maintenance procedures and documentation; (3) Air Midwest's weight and balance program at the time of the accident; (4) the Raytheon Aerospace quality assurance inspector's failure to detect the incorrect rigging of the elevator control system; (5) the Federal Aviation Administration's (FAA) average weight assumptions in its weight and balance program guidance at the time of the accident; and (6) the FAA's lack of oversight of Air Midwest's maintenance program and its weight and balance program.

4. Recommendations

4.1 New Recommendations

As a result of the investigation of this accident, the National Transportation Safety Board makes the following recommendations to the Federal Aviation Administration:

Adopt a program for performing targeted surveillance and increased oversight of maintenance practices at 14 *Code of Federal Regulations* Part 121 air carriers to ensure that maintenance instructions are being followed as written and that maintenance personnel (including, but not limited to, management, quality assurance, tooling, and training personnel, as well as mechanics) are following all steps in the instructions unless authorization has been granted in accordance with the air carrier's maintenance program. (A-04-4)

Verify that 14 *Code of Federal Regulations* Part 121 air carriers have procedures in their Continuing Analysis and Surveillance System program for identifying deficiencies and incorporating changes to the carrier's maintenance program and that maintenance personnel for these air carriers (including, but not limited to, management, quality assurance, tooling, and training personnel, as well as mechanics) use these procedures. (A-04-5)

Modify (1) appendix G of 14 *Code of Federal Regulations* (CFR) Part 23 and appendix H of 14 CFR Part 25 and (2) 14 CFR 121.369 to require that the Instructions for Continued Airworthiness and air carrier maintenance manuals, respectively, include a complete functional check at the end of maintenance for each critical flight system. (A-04-6)

Require manufacturers of aircraft operated under 14 *Code of Federal Regulations* Part 121 to identify appropriate procedures for a complete functional check of each critical flight system; determine which maintenance procedures should be followed by such functional checks; and modify their existing maintenance manuals, if necessary, so that they contain procedures at the end of maintenance for a complete functional check of each critical flight system. (A-04-7)

Require 14 *Code of Federal Regulations* Part 121 air carriers to modify their existing maintenance manuals, if necessary, so that they contain procedures at the end of maintenance for a complete functional check of each critical flight system. (A-04-8)

Prohibit inspectors from performing required inspection item inspections on any maintenance task for which the inspector provided on-the-job training to the mechanic who accomplished the task. (A-04-9)

Require 14 *Code of Federal Regulations* Part 121 air carriers that use contractors to perform required inspection item (RII) maintenance tasks and inspections to have air carrier personnel who are physically present when a substantial amount of the RII planning, tasking, maintenance work, and inspections are performed and are readily available when they are not physically present and who ensure that the processes and procedures used by contractors to perform RII maintenance tasks and inspections are the same as those used by air carrier maintenance personnel. (A-04-10)

Develop detailed on-the-job (OJT) training requirements for 14 *Code of Federal Regulations* (CFR) Part 121 air carriers that rely on OJT as a maintenance training method. These requirements should include, but not be limited to, best practices, procedures, and methods for accomplishment and administration of this training. Ensure that these OJT requirements are incorporated into 14 CFR Part 121 air carrier maintenance training programs. (A-04-11)

Audit training records for personnel who are currently performing maintenance on Air Midwest airplanes to verify that the training was properly accomplished in accordance with the company's Maintenance Procedures Manual and Maintenance Training Manual. (A-04-12)

Require 14 *Code of Federal Regulations* Part 121 air carriers to implement a program in which carriers and aircraft manufacturers review all work card and maintenance manual instructions for critical flight systems and ensure the accuracy and usability of these instructions so that they are appropriate to the level of training of the mechanics performing the work. (A-04-13)

Include the Continuing Analysis and Surveillance System guidance from Advisory Circular (AC) 120-16D, "Continuing Airworthiness Maintenance Programs," and AC 120-79, "Developing and Implementing a Continuing Analysis Surveillance System," in Federal Aviation Administration Order 8300.10, *Airworthiness Inspector's Handbook.* (A-04-14)

Require that all 14 *Code of Federal Regulations* Part 121 air carrier maintenance training programs be approved. (A-04-15)

Require that 14 *Code of Federal Regulations* Part 121 air carriers implement comprehensive human factors programs to reduce the likelihood of human error in aviation maintenance. (A-04-16)

Identify those situations that would require the use of actual instead of average weights in weight and balance computations and incorporate this information into Advisory Circular 120-27, "Aircraft Weight and Balance Control." (A-04-17)

Unless an actual weight program is developed and implemented, establish a weight and balance program that requires 14 *Code of Federal Regulations* Part 121 air carriers to periodically sample passenger and baggage weights and determine appropriate statistical distribution characteristics for regional, seasonal, demographic, aircraft, and route variances. (A-04-18)

Establish a program to periodically review 14 *Code of Federal Regulations* Part 121 air carrier weight and balance data to ensure that regional, seasonal, demographic, aircraft, and route trends among carriers are valid. (A-04-19)

Require 14 *Code of Federal Regulations* Part 121 air carriers to retain all survey data and products, as well as documentation of the methodology used to justify their average weight programs, and audit these data as necessary. (A-04-20)

Require 14 *Code of Federal Regulations* Part 121 air carriers that use average weight and balance programs to develop and implement weight and center of gravity safety margins to account for individual passenger and baggage variances. (A-04-21)

Conduct or sponsor research to develop systems that are capable of delivering actual aircraft weight and balance data before flight dispatch. These systems should rapidly provide accurate and reliable weight and balance data. (A-04-22)

Promote the use of systems that deliver accurate weight and balance data as a preferred alternative to the use of average weight and balance programs. (A-04-23)

Ensure that Raytheon Aircraft Company revises the maintenance procedures for critical flight systems in its Beech 1900, 1900C, and 1900D Airliner Maintenance Manuals to ensure that the procedures can be completely and correctly accomplished. (A-04-24)

4.2 Previously Issued Recommendation Reiterated in This Report

The Safety Board reiterates the following recommendation to the Federal Aviation Administration:

> Require that all operators of airplanes equipped with a cockpit voice recorder (CVR) test the functionality of the CVR system prior to the first flight of each day, as part of an approved aircraft checklist. This test must be conducted according to procedures provided by the CVR manufacturer and shall include, at a minimum, listening to the recorded signals on each channel to verify that the audio is being recorded properly, is intelligible, and is free from electrical noise or other interference. (A-02-25)

4.3 Previously Issued Recommendation Resulting From This Accident Investigation

As a result of the investigation of this accident, the Safety Board issued the following recommendation to the Federal Aviation Administration on January 2, 2004:

> Identify all airplanes equipped with unguarded flight crewmember rotary seatbelt buckles and require replacement with guarded buckles that cannot be inadvertently unlatched. (A-03-57)

For additional information about this recommendation, see section 1.12.2 of this report.

4.4 Previously Issued Recommendation Classified in This Report

Safety Recommendation A-03-31 (previously classified "Open—Response Received") is classified "Closed—Superseded" in section 2.5.1.4 of this report.

For more information about this recommendation, see sections 1.18.4.4.1 and 2.5.1.4 of this report.

BY THE NATIONAL TRANSPORTATION SAFETY BOARD

ELLEN ENGLEMAN CONNERS
Chairman

MARK V. ROSENKER
Vice Chairman

JOHN J. GOGLIA
Member

CAROL J. CARMODY
Member

RICHARD F. HEALING
Member

Adopted: February 26, 2004

5. Appendixes

Appendix A
Investigation and Hearing

Investigation

The National Transportation Safety Board was initially notified of this accident on January 8, 2003, about 0900. A full go-team was assembled and departed at 1300 from Ronald Reagan National Airport, Washington, D.C., for Charlotte, North Carolina. The team arrived on scene about 1500. Accompanying the team to Charlotte was Board Member John Goglia.

The following investigative teams were formed: Aircraft Operations and Human Performance, Aircraft Structures, Aircraft Systems, Powerplants, Aircraft Maintenance and Records, Air Traffic Control, Meteorology, Aircraft Performance, Survival Factors, and Airport and Emergency Response. Specialists were also assigned to conduct the readout of the flight data recorder and transcribe the cockpit voice recorder at the Safety Board's laboratory in Washington, D.C.

Parties to the investigation were the Federal Aviation Administration (FAA); Raytheon Aircraft Company; Raytheon Aerospace, LLC; Structural Modification and Repair Technicians, Inc. (SMART); International Association of Machinists; Air Midwest, Inc.; Air Line Pilots Association; National Air Traffic Controllers Association; and Hartzell Propeller. Also, in accordance with the provisions of Annex 13 to the Convention on International Civil Aviation, the Transportation Safety Board of Canada participated in the investigation as the representative of the State of Design and Manufacture of the Engines.

Public Hearing

A public hearing was held on May 20 and 21, 2003, in Washington, D.C. Chairman Ellen Engleman Conners presided over the hearing; Vice Chairman Mark Rosenker and Members John Goglia, Carol Carmody, and Richard Healing also participated in the hearing.

The issues presented at the public hearing were average versus actual passenger and baggage weights; contractor maintenance work practices, oversight, and quality assurance; maintenance training; and FAA oversight. Parties to the public hearing were the FAA, Raytheon Aircraft, Raytheon Aerospace, International Association of Machinists, Air Midwest, Air Line Pilots Association, and SMART.

Appendix B
Cockpit Voice Recorder Transcript

The following is the transcript of the Fairchild A-100A cockpit voice recorder, serial number 61979, installed on Air Midwest flight 5481, a Raytheon (Beechcraft) 1900D, N233YV, which experienced a loss of pitch control during takeoff from Charlotte, North Carolina, on January 8, 2003.

LEGEND

RDO	Radio transmission from accident aircraft, Air Midwest 5481
CAM	Cockpit area microphone voice or sound source
PA	Voice or sound heard on the public address system channel
HOT	Hot microphone voice or sound source[1]
	For RDO, CAM, HOT, and PA comments: **-1** Voice identified as the Captain **-2** Voice identified as the First Officer **-3** unidentified male voice – Ramp employee **-4** unidentified female voice – Ramp employee **-5** recorded human voice – Auto Briefer **-?** Voice unidentified
RMP1	Radio transmission from north ramp control at Charlotte
RMP2	Radio transmission from outbound ramp control at Charlotte
GND	Radio transmission from ground control at Charlotte
TWR	Radio transmission from the Air Traffic Control Tower at Charlotte
*	Unintelligible word
@	Non-Pertinent word
&	Third party personal name (see note 5 below)
#	Expletive

[1] This recording contained audio from Hot microphones used by the flightcrew. The voices or sounds on these channels were also, at times, heard by the CVR group on the CAM channel and vice versa. In these cases, comments are generally annotated as coming from the source (either HOT or CAM) from which the comment was easiest to hear and discern.

-, - - -	Break in continuity or interruption in comment
( )	Questionable insertion
[ ]	Editorial insertion
...	Pause

Note 1: Times are expressed in Eastern Standard Time (EST).

Note 2: Generally, only radio transmissions to and from the accident aircraft were transcribed.

Note 3: Words shown with excess vowels, letters, or drawn out syllables are a phonetic representation of the words as spoken.

Note 4: A non-pertinent word, where noted, refers to a word not directly related to the operation, control or condition of the aircraft.

Note 5: Personal names of 3rd parties not involved in the conversation are generally not transcribed.

INTRA-COCKPIT COMMUNICATION		AIR-GROUND COMMUNICATION	
TIME and SOURCE	CONTENT	TIME and SOURCE	CONTENT
0815:41.3 CAM	[start of recording]		
0816:20 CAM-?	sorry.		
0816:36 CAM-2	*.		
0816:54 CAM-1	release look good to you?		
0816:55 CAM-2	yeah.		
0816:56 CAM-1	excellent.		
0816:56 CAM-1	oh * I didn't unpack my bag.		
0816:58 CAM-2	uh oh... [sound of laughter].		
0817:00 CAM-1	* did it again.		
0817:01 CAM-2	(already, already) covered.		
0817:04 CAM-2	you want me to go out there, and you -		
0817:05 CAM-1	no no no, I got it.		

INTRA-COCKPIT COMMUNICATION		AIR-GROUND COMMUNICATION	
TIME and SOURCE	CONTENT	TIME and SOURCE	CONTENT
0817:05 CAM-2	-can do it.		
0817:06 CAM-2	all right-.		
0817:06 CAM-1	I'll just load people and do it at the same time.		
0817:07 CAM-2	okay.		
0817:08 CAM-1	morning.		
0817:09 CAM-?	hi *.		
0817:10 CAM-1	if you put your bag(s) here, I can put it up here, or you can put it underneath you seat, whatever you like I just gotta get to my bag here, so.		
0817:15 CAM-?	* okay.		
0817:19 CAM-1	here I'll put it up here and then we'll * it.		
0817:22 CAM-?	* that little uh compartment there, good.		
0817:26 CAM-1	thanks.		

INTRA-COCKPIT COMMUNICATION		AIR-GROUND COMMUNICATION	
TIME and SOURCE	CONTENT	TIME and SOURCE	CONTENT
0817:27 CAM-?	(great.)		
0817:29 CAM-1	yeah, we'll just put it up here right now, so I can unload all these to get to the bottom.		
0817:34 CAM-1	what a mess. [sound of laughter]		
0817:35 CAM-2	[sound of laughter]		
0817:35 CAM-?	[sound of laughter]		
0818:00 CAM	[unidentified sound similar to bell]		
0818:09 CAM-1	come on I have new batteries in here too so-		
0818:11 CAM-2	oh, score.		
0818:12 CAM-?	can I throw this one in here also, when you're *?		
0818:13 CAM-1	yeah just set it on the ground, (I) got to grab my stuff * * (last one on).		
0818:27 CAM-2	full house back there?		

INTRA-COCKPIT COMMUNICATION		AIR-GROUND COMMUNICATION	
TIME and SOURCE	CONTENT	TIME and SOURCE	CONTENT
0818:29 CAM-1	that's what they told me... might be sss- one still-		
0818:32 CAM-2	yeah okay.		
0818:33 CAM-1	looks like there's nineteen.		
0818:41 CAM-1	[sound of grunt]		
0818:46 CAM-2	[sound of chuckle]		
0819:08 CAM-2	how'd you sleep last night?		
0819:10 CAM-1	okay.		
0819:11 CAM-2	I was just like, I had one of those aviation nights. I was just like flyin all night long.		
0819:16 CAM-1	really?		
0819:16 CAM-2	(stuck in) I was just like.		
0819:18 CAM-1	I had a dream that I was in Miami all night partying [sound of laughter].		

INTRA-COCKPIT COMMUNICATION		AIR-GROUND COMMUNICATION	
TIME and SOURCE	**CONTENT**	**TIME and SOURCE**	**CONTENT**
0819:23 CAM-1	oh, can I put that up here?		
0819:25 CAM-1	thanks.		
0819:30 CAM-2	in Miami huh?		
0819:33 CAM-2	maybe you're destined to go to the Dash.		
0819:34 CAM-2	[sound of laughter]		
0819:35 CAM-1	[sound of laughter]		
0819:36 CAM-1	that's what I was thinkin.		
0819:36 CAM-2	[sound of laughter]		
0819:50 CAM	[sound similar to oxygen mask check]		
0820:00 CAM-2	we full?		
0820:01 CAM-1	you might want to put the fuel * * low * you know.		
0820:04 CAM-1	* * (it's) twenty four, you can count it twenty two or twenty three.		

INTRA-COCKPIT COMMUNICATION		AIR-GROUND COMMUNICATION	
TIME and SOURCE	CONTENT	TIME and SOURCE	CONTENT
0820:07 CAM-2	okay.		
0820:12 CAM-?	* * ramp people *		
0820:12 CAM-1	oh okay.		
0820:13 CAM-?	* (door) *		
0820:15 CAM-1	thanks.		
0820:19 CAM-1	you can count nineteen people in the back, I don't know the bags yet.		
0820:22 CAM-2	okay.		
0820:23 CAM-1	I just know it's a lot of them, so.		
0820:24 CAM-2	all right.		
0820:25 CAM-1	* fuel whatever you *		
0820:26 CAM-2	I'll put it at twenty three... I think that's good enough.		

INTRA-COCKPIT COMMUNICATION		AIR-GROUND COMMUNICATION	
TIME and SOURCE	**CONTENT**	**TIME and SOURCE**	**CONTENT**
0820:28 CAM-1	good morning, welcome aboard USAirways Express service to Greenville-Spartanburg. it's... a very short flight, maybe thirty minutes gate to gate. uh we ask you to keep your seatbelts buckled till (we're at the) gate. (so) anything you brought with you needs to be stowed underneath your seat for takeoff and landing. we have two (emergency exits) on left, one on the right to open those doors... pull the handle down, turn the door sideways, throw the door out and run out... this is your uh emergency briefing card, it's in the seat in front of you we're gonna play a briefing please pay attention as we taxi out... this door can also be used as emergency exit. push the button in the box lift the handle and the door will come out. please don't hang on to that door if you do it'll pull you out... sit back relax enjoy the flight and we'll... have you there in a few minutes.		
0821:19 CAM-1	*		
0821:19 CAM-3	* carry on.		
0821:20 CAM-2	*		
0821:22 CAM-4	tire back there?		
0821:22 CAM-(3)	yeah.		
0821:25 CAM-1	how many total bags?		

INTRA-COCKPIT COMMUNICATION		AIR-GROUND COMMUNICATION	
TIME and SOURCE	**CONTENT**	**TIME and SOURCE**	**CONTENT**
0821:27 CAM-3	uh... thirty one.		
0821:29 CAM-1	thirty one and -		
0821:30 CAM-3	that's-		
0821:30 CAM-1	-a tire.		
0821:30 CAM-3	-including carry ons.		
0821:31 CAM-1	okay thank you.		
0821:32 CAM-3	iszat, is that cool?		
0821:33 CAM-1	we'll figure it out, yeah.		
0821:35 CAM-3	plus ("the" or "uh") tire(s).		
0821:37 CAM-2	thirty one bags.		
0821:38 CAM-1	yeah.		
0821:38 CAM-2	I saw a box back there, are they counting it as-		

INTRA-COCKPIT COMMUNICATION		AIR-GROUND COMMUNICATION	
TIME and SOURCE	CONTENT	TIME and SOURCE	CONTENT
0821:40 CAM-1	do you have any comail? [company mail]		
0821:43 CAM-4	no.		
0821:43 CAM-2	or PDQ? [courier service packages]		
0821:44 CAM-1	*.		
0821:44 CAM-2	no PDQ. all right.		
0821:45 CAM-1	it's probably a checked bag.		
0821:47 CAM-2	so.		
0821:47 CAM-1	hold off, on this... and add it up in your head -		
0821:50 CAM-4	here you go.		
0821:50 CAM-2	all right.		
0821:51 CAM-1	-and then if you need the index number... to bring it in you know.		
0822:00 CAM-2	(let's see) [sound of mumbling]		

INTRA-COCKPIT COMMUNICATION		AIR-GROUND COMMUNICATION	
TIME and SOURCE	**CONTENT**	**TIME and SOURCE**	**CONTENT**
0822:06 CAM-2	oh on the... closet you meant?		
0822:07 CAM-1	yeah that way-		
0822:08 CAM-2	-yeah-		
0822:09 CAM-1	-you could.		
0822:09 CAM-2	gotcha.		
0822:11 CAM-1	you know.		
0822:11 CAM-2	yeah... adjust the index, exactly.		
0822:14 CAM-2	umm, lets see * (seventy), seventy five.		
0822:18 CAM-1	should be fine.		
0822:19 CAM-2	yeah * (five).		
0822:26 CAM-1	and if it doesn't fit then we'll move our seats forward, and put all that * [sound of laughter] behind our seats.		

INTRA-COCKPIT COMMUNICATION		AIR-GROUND COMMUNICATION	
TIME and SOURCE	CONTENT	TIME and SOURCE	CONTENT
0822:56 CAM-2	[sound of laughter] all right... *teen, eight ten six (thir)teen and (four) is * eight eleven * *teen and three is... ten six (twenty)*... fifteen (and)		
0822:58 CAM-1	*.		
0822:58 CAM-2	wait a minute, is this right?		
0823:02 CAM-1	where's the other part of the release?		
0823:05 CAM-2	oh I got it right here-		
0823:05 CAM-1	oh okay-		
0823:06 CAM-2	-I'm * * (on it).		
0823:06 CAM-1	-nevermind, perfect.		
0823:08 CAM-2	let's see... fifteen, eighteen, eight nine ten seventeen, twenty four... * ... twenty one... * * eleven * nineteen * * * five six seven * (we're)-		
0823:35 CAM-1	is it gonna work? we're close?		
0823:37 CAM-2	that's without anything in the closet... let me make-.		

INTRA-COCKPIT COMMUNICATION		AIR-GROUND COMMUNICATION	
TIME and SOURCE	CONTENT	TIME and SOURCE	CONTENT
0823:39 CAM-1	seventeen... aren't-		
0823:40 CAM-2	*.		
0823:41 CAM-1	-we seventeen one twenty?		
0823:41 CAM-2	yeah... that only allows me two pounds in the closet * (twenty)		
0823:45 CAM-1	you can bring this down to twenty two-		
0823:46 CAM-2	yeah, I'll (just) start over.		
0823:47 CAM-1	-put ten pounds in the closet * * *.		
0823:52 CAM-2	umm.		
0823:52 CAM-1	here start * * that way.		
0823:53 CAM-2	yeah.		
0823:55 CAM-1	* * * but we're gonna be okay, right?		

INTRA-COCKPIT COMMUNICATION		AIR-GROUND COMMUNICATION	
TIME and SOURCE	CONTENT	TIME and SOURCE	CONTENT
0823:58 CAM-2	uh yeah-		
0823:59 CAM-1	okay.		
0823:59 CAM-2	-I think so.		
0824:00 CAM-1	finish for me, I don't wanna *		
0824:00 CAM-2	* * bring it to twenty two that's fine.		
0824:02 CAM-1	* * battery is on * * checked annunciator checked EFIS power's off NAV and beacons on and ground * * and * * * capped-		
0824:08 CAM-2	fuel caps and prop *-		
0824:08 CAM-1	-and clear over there?		
0824:09 CAM-2	-capped and clear on the right.		
0824:10 CAM-2	before start checks-		
0824:11 CAM-3	*.		

INTRA-COCKPIT COMMUNICATION		AIR-GROUND COMMUNICATION	
TIME and SOURCE	CONTENT	TIME and SOURCE	CONTENT
0824:11 CAM-2	-complete.		
0824:12 CAM-1	what?		
0824:12 CAM-3	how many we gotta take off?		
0824:14 CAM-1	we're figuring it out. we don't think we have to take anything.		
0824:18 CAM	[sound similar to engine starting]		
0824:26 CAM	[sound of unidentified chime]		
0824:51 CAM	[sound similar to altitude alerter]		
0825:36 CAM-2	*.		
0825:38 HOT-1	eighty one should fit, doesn't it?...yeah.		
0825:40 CAM-2	yeah.		
0825:41 CAM-1	okay.		
0826:17 CAM-2	*.		

INTRA-COCKPIT COMMUNICATION		AIR-GROUND COMMUNICATION	
TIME and SOURCE	CONTENT	TIME and SOURCE	CONTENT
0826:25 CAM-1	*.		
0826:26 HOT-2	I'm sorry I'm operating really slow-		
0826:27 HOT-1	no no no-		
0826:27 HOT-2	-this morning.		
0826:27 HOT-2	eight-		
0826:27 HOT-1	-that's fine. I'm * I'm just it-		
0826:28 HOT-2	-and three is eleven and uh-		
0826:29 HOT-1	-it's I don't care, we're still on time-		
0826:31 HOT-2	all righty.		
0826:31 HOT-1	and take your time.		
0826:32 HOT-2	all righty, eight and three is eleven... seven is uh-		

INTRA-COCKPIT COMMUNICATION		AIR-GROUND COMMUNICATION	
TIME and SOURCE	**CONTENT**	**TIME and SOURCE**	**CONTENT**
0826:33 HOT-1	I didn't know we were gonna be nineteen and overloaded or I wouldn't have * let you uh I mean not let you but I * not make you do all this-		
0826:37 HOT-2	[sound of chuckle] no I got ya.		
0826:39 HOT-1	-I don't really care-		
0826:40 HOT-2	eighteen-		
0826:41 HOT-1	how fast or slow you go.		
0826:43 HOT-2	-four... eight... one... zero... seven.		
0826:50 HOT-2	cool... seventeen oh eighteen.		
0826:55 HOT-1	seventeen one twenty is our weight huh?		
0826:56 HOT-2	yeah is our max-		
0826:57 HOT-1	so we're cool.		
0826:58 HOT-2	-so yeah.		

INTRA-COCKPIT COMMUNICATION		AIR-GROUND COMMUNICATION	
TIME and SOURCE	CONTENT	TIME and SOURCE	CONTENT
0827:07 HOT-1	&'s lookin over there like what am I doin he knows that I * I'm supposed to be doin the paperwork.		
0827:12 HOT-2	who is that?		
0827:13 HOT-1	&.		
0827:14 HOT-2	oh.		
0827:19 HOT-2	they show nineteen adult, uh-		
0827:21 HOT-1	yeah, nineteen.		
0827:22 HOT-2	oh.		
0827:23 HOT-1	that's ok you're-you got it don't worry about it.		
0827:24 HOT-2	one child though?		
0827:26 HOT-1	but, yeah you can put eighteen and one, you can still count them all as adult it's your liberty to do that.		
0827:31 HOT-2	oh really-		

INTRA-COCKPIT COMMUNICATION		AIR-GROUND COMMUNICATION	
TIME and SOURCE	CONTENT	TIME and SOURCE	CONTENT
0827:31 HOT-1	yeah.		
0827:31 HOT-2	-I heard other people say if it says children on there you got to do child weights.		
0827:35 HOT-1	you just gotta put the child here-		
0827:36 HOT-2	yeah yeah.		
0827:36 HOT-1	-you don't have to.		
0827:37 HOT-2	that's what I thought, that's what I always thought, but.		
0827:39 HOT-1	you know it-it's basically Captain's discrection. I mean you're being conservative doing it that way, so I don't know why-		
0827:44 HOT-2	yeah.... *.		
0827:54 HOT-1	yeah you've got Greenville/Spart-yeah you got charts up here for Greenville/Spartanburg *.		
0827:57 HOT-2	yeah.		
0828:04 HOT-2	we're due out at thirty, you wanna call it...		

INTRA-COCKPIT COMMUNICATION		AIR-GROUND COMMUNICATION	
TIME and SOURCE	CONTENT	TIME and SOURCE	CONTENT
0828:05 HOT-1	yeah.		
0828:07 HOT-2	thirty?		
0828:07 HOT-1	perfect yeah.		
0828:12 HOT-1	nice job.		
0828:13 HOT-2	I gotta just plot this index here and then- thank you - uh seventeen oh eighteen, and eighty one should be in here somewhere.		
0828:21 HOT-1	yeah, just put a circle there don't even put a dot. just make sure it doesn't fall out of the... box.		
0828:25 HOT-2	the box, yeah.		
0828:28 HOT-2	(wait a minute), oh... oh that's right. that's in the box.		
0828:34 HOT-1	[sound of chuckle]		
0828:35 HOT-2	[sound of chuckle]... you wanna check it really quick?... I think it's right.		

INTRA-COCKPIT COMMUNICATION		AIR-GROUND COMMUNICATION	
TIME and SOURCE	**CONTENT**	**TIME and SOURCE**	**CONTENT**
0828:38 HOT-1	ten sixty seven... (twenty) three ten, uh thirty.		
0828:55 HOT-1	that's nine... plus eight... seven, carry the one * * seven.		
0829:02 HOT-1	perfect. nice job.		
0829:03 HOT-2	thank you... sorry it took me so long.		
0829:05 HOT-1	no, it would have taken me just as long. It just seems longer because it's awkward to you-		
0829:09 HOT-2	yeah.		
0829:09 HOT-1	-that I'm sitting here doing nothing.		
0829:10 HOT-2	yeah that's true. good point.		
0829:15 HOT-1	[sound of laughter]		
0829:18 HOT-2	[sound of laughter] * is & out there?		
0829:19 HOT-1	[sound of laughter] *.		
0829:22 HOT-2	&'s in a funny mood today.		

INTRA-COCKPIT COMMUNICATION		AIR-GROUND COMMUNICATION	
TIME and SOURCE	CONTENT	TIME and SOURCE	CONTENT
0829:28 HOT-1	I wonder if I've done something wrong that-... is she down there yanking on the chocks?... yeah.		
0829:34 HOT-2	yeah... she just pulled 'em.		
0829:39 HOT-2	[sound of laughter]		
0829:44 HOT-1	[sound of laughter]...&.		
0829:41 HOT-2	[sound of laughter]		
0829:47 HOT-2	* *. he's probably lookin at our... tail like 'bout ready to hit the ground right now, with all the bags back there... [sound of laughter]		
0829:53 HOT-1	yeah.		
0829:53 HOT-2	laughin at us.		
0830:04 CAM/HOT	[sound of click]		
0830:08 CAM/HOT	[sound of two clicks in rapid succession]		
0830:09 CAM/HOT	[sound of click]		

INTRA-COCKPIT COMMUNICATION		AIR-GROUND COMMUNICATION	
TIME and SOURCE	CONTENT	TIME and SOURCE	CONTENT
0830:09 CAM	[sound similar to altitude alterter]		
0830:12 CAM	[sound of several clicks]		
0830:18 CAM	[several clicking sounds similar to seatbelt]		
0830:23 HOT-2	and the uh, after start checklist avionics master?		
0830:25 HOT-1	on.		
0830:26 HOT-2	engine anti-ice?		
0830:26 HOT-1	on.		
0830:27 HOT-2	AC buses?		
0830:27 HOT-1	on.		
0830:28 HOT-2	EFIS aux power?		
0830:28 HOT-1	on.		
0830:29 HOT-2	EFIS power?		

INTRA-COCKPIT COMMUNICATION		AIR-GROUND COMMUNICATION	
TIME and SOURCE	**CONTENT**	**TIME and SOURCE**	**CONTENT**
0830:29 HOT-1	on.		
0830:30 HOT-2	Load and volt meters are checked standby attitude indicator is on and uncaged environmental set PAX briefing... is sent. and the brakes?		
0830:33 PA-5	welcome aboard. the flight crew is making final preparation for departure. as they do, please note that the Beechcraft nineteen hundred airliner has many features for your comfort and safety. as these features are presented, please follow along with a passenger information card which can be found in a seat pocket near you. the aircraft is equipped with four emergency exits, two located over the right wing and one over the left wing, which may be opened by pulling down on the red handles. also, the main cabin door through which you entered may be opened by first pressing the button, then raising the handle and pushing the door open. for those passengers seated in the over-wing emergency exit seats, please note that the passenger briefing card lists selection criteria and functions which passengers seated in these seats must be willing and able to perform in the event of an emergency evacuation. at this time please identify yourself to a flight crewmember if you are seated in an exit row and feel that you can not meet the selection criteria, or [continued next page]		

INTRA-COCKPIT COMMUNICATION		AIR-GROUND COMMUNICATION	
TIME and SOURCE	**CONTENT**	**TIME and SOURCE**	**CONTENT**
PA-5	have a non-discernible condition that will prevent you from performing the required functions, or may suffer bodily harm from performing the required functions, or do not wish to perform these functions for any reason. your safety belt should be fastened now and should remain fastened during the entire flight. insert the flat metal end into the buckle until it clicks. pull the loose strap away from the buckle to tighten it. to release the safety belt, simply lift up on the buckle. federal aviation regulations require passenger compliance with lighted passenger information signs, posted placards and crewmember instructions concerning the use of safety belts. in addition, federal aviation regulations prohibit smoking on board at any time. in the unlikely event of a water landing, your seat cushion can be used as a flotation device. remove the cushion from the seat, pull it to your chest, and place your arms through the straps, as depicted on the passenger information card. your seatback must be in the upright position and your tray table must be stowed before each takeoff and landing. oxygen masks are located in mask containers in the wall near the ceiling or overhead if you are seated in the rear center seat. the possibility of needing additional oxygen is remote, but in case it is, the mask container doors will open. take your mask from the container and pull the cord to start the flow of oxygen. place the mask over your nose and mouth as indicated on the passenger information card. if you are traveling with a child, put your mask on first then assist the child. there are two fire extinguishers aboard. one is located in the cockpit under the right pilot seat. the other is located on the backside of the coat closet just forward of the right front passenger seat. to operate the extinguisher, pull the pin, aim at the base of any fire and squeeze the handle. the use of portable electronic devices of any kind is prohibited during takeoff and landing. the use of cellular telephones while on board is prohibited at all times. carry on baggage must be kept out of the aisle at all times and must be stowed underneath the seat in front of you during each takeoff and landing. once again, welcome aboard. we ask now that you sit back relax and enjoy the flight.[duration approximately 03:30]		

INTRA-COCKPIT COMMUNICATION		AIR-GROUND COMMUNICATION	
TIME and SOURCE	CONTENT	TIME and SOURCE	CONTENT
0830:36 HOT-1	released and checked.		
0830:37 HOT-2	checked right-		
0830:37 HOT-1	cleared over there?		
0830:38 HOT-2	-after start checklist complete.		
0830:38 HOT-2	clear over here.		
		0830:39.2 RDO-2	north ramp Air Midwest fifty four eighty one's ready to taxi out the sewer four charlie.
		0830:45 RMP1	and fifty four eighty one, north ramp uh proceed to the north ramp hold line contacting outbound ramp one thirty one point six, be advised there is a pushback top of the concourse.
		0830:54 RDO-2	to the north hold line * -
		0830:56 RDO-2	talk to them and we'll look for the pushback at the top, Air Midwest fifty four eighty one.
0831:02 HOT-2	clear on the right.		

INTRA-COCKPIT COMMUNICATION		AIR-GROUND COMMUNICATION	
TIME and SOURCE	**CONTENT**	**TIME and SOURCE**	**CONTENT**
0831:10 HOT-2	I still don't trust these center-these taxiway *-I guess... they're painted with enough room to-for our right- we got plenty of room over here.		
0831:19 HOT-2	(but it) never looks like it when you're getting... ready to go.		
0831:30 HOT-1	I wish we got to fly back from Raleigh to here.		
0831:33 HOT-2	yeah, wouldn't that be great... clear on the right.		
0831:40 HOT-2	we could uh... tell the... crew from the seven thirty seven crew that we're just gonna go ahead and fly 'em.		
0831:47 HOT-1	[sound of laughter] yeah, good call.		
0831:48 HOT-2	[sound of laughter]		
0832:14 HOT-2	so that's what I always thought Katie that as long as you listed at the bottom like you know on the manifest that you have this many- * I always thought like... you only use child weights if you absolutely needed to and and only then the listing of how many... you know adults, children and infants you had was just in case you ever crashed or something- they're looking for bodies kinda thing.		
0832:34 HOT-1	well that's what I was under the- I mean-		

INTRA-COCKPIT COMMUNICATION		AIR-GROUND COMMUNICATION	
TIME and SOURCE	**CONTENT**	**TIME and SOURCE**	**CONTENT**
0832:42 HOT-1	(you know) I think really it is whatever anybod- well-whoever is the Captain is most-		
0832:46 HOT-2	yeah.		
0832:46 HOT-1	-comfortable with.		
0832:47 HOT-2	yeah... I think you're right.		
0832:50 HOT-2	that CRJ sure is a good lookin plane isn't it?		
0832:53 HOT-1	yeah, wish I was flyin it. [sound of laughter] I would love to be Captain on that because... you decide you hate the air-lines then you got that Challenger rating already.		
0833:03 HOT-2	oh yeah... yeah wouldn't that be cool?		
0833:06 HOT-1	yeah.		
0833:13 HOT-1	we're cleared to the hold line just-		
0833:14 HOT-2	cleared to the hold line-		
0833:15 HOT-1	-okay.		

INTRA-COCKPIT COMMUNICATION		AIR-GROUND COMMUNICATION	
TIME and SOURCE	CONTENT	TIME and SOURCE	CONTENT
0833:15 HOT-2	- I agree yeah.		
0833:16 HOT-2	not to mention... you're flyin a sweet piece of equipment.		
0833:21 HOT-1	yeah.		
0833:22 HOT-2	yeah and then-and like flyin a Challenger would probably seem like a walk in the park after flyin that thing... you know like, it's so little. [sound of laughter]		
0833:29 HOT-1	yeah... I mean I might have to, you know... you know deal with dinners in Paris or somethin, you know-		
0833:37 HOT-2	yeah.		
0833:38 HOT-1	-or overnights in Cancun-		
0833:39 HOT-2	you might *-		
0833:40 HOT-1	-you know, but.		
0833:41 HOT-2	-you might suffer through it. [sound of laughter]		
0833:43 HOT-1	learn another foreign language-		

INTRA-COCKPIT COMMUNICATION		AIR-GROUND COMMUNICATION	
TIME and SOURCE	CONTENT	TIME and SOURCE	CONTENT
0833:45 HOT-2	[sound of laughter]		
0833:46 HOT-1	-but you know heck.		
0833:52 HOT-2	it's just such a better lookin plane than the ERJs. after not seeing a CRJ back here for a long time I was starting to think oh, the ERJ is an ok looking plane, but they're really kinda ugly when you park a CRJ next to 'em.		
0834:02 HOT-1	[sound of laughter]		
0834:03 HOT-2	they are.		
0834:04 HOT-1	hey they all make the paycheck *-		
0834:06 HOT-2	yeah.		
0834:06 HOT-1	-look nice. [sound of laughter]		
0834:07 HOT-2	[sound of laughter] yeah.		
0834:08 HOT-1	who is this?		
0834:10 HOT-2	I don't know... looks like an Airbus three hundred maybe? I think?		

INTRA-COCKPIT COMMUNICATION		AIR-GROUND COMMUNICATION	
TIME and SOURCE	CONTENT	TIME and SOURCE	CONTENT
0834:14 HOT-1	well they don't have the-		
0834:15 HOT-2	freighter?		
0834:16 HOT-1	-winglets on it.		
0834:17 HOT-2	I know but... I always thought they did too-that all Airbuses had the winglets but like the FedEx those planes they have over there, those are all three hundreds and they don't have-		
0834:24 HOT-1	oh-		
0834:25 HOT-2	-winglets either. I think they-		
0834:25 HOT-1	-Express Net, whats that?		
0834:27 HOT-2	I have no idea.		
0834:28 HOT-1	that a cargo company?		
0834:29 HOT-2	it's gotta be cargo they got no-		
0834:29 HOT-1	it's humongous.		

INTRA-COCKPIT COMMUNICATION		AIR-GROUND COMMUNICATION	
TIME and SOURCE	**CONTENT**	**TIME and SOURCE**	**CONTENT**
0834:30 HOT-2	-no uh.		
0834:32 HOT-1	windows yeah-		
0834:32 HOT-2	windows yeah.		
0834:33 HOT-1	good call.		
0834:34 HOT-1	[sound of laughter]		
0834:35 HOT-2	[sound of laughter]		
0834:36 HOT-2	I'm like stumblin though it-yeah I'm pretty sure that's Airbus.		
		0834:39.2 RDO-2	ramp good * morning Air Midwest fifty four eighty one, north line taxi please.
		0834:46 RMP2	Air Shuttle fifty four eighty er....Air Midwest fifty four eighty one proceed spot two ground one twenty one point eight please.
		0834:52.9 RDO-2	spot two and we'll talk to 'em point eight, Air Midwest fifty four eighty one.

INTRA-COCKPIT COMMUNICATION		AIR-GROUND COMMUNICATION	
TIME and SOURCE	**CONTENT**	**TIME and SOURCE**	**CONTENT**
0834:59 HOT-2	there goes a CRJ right now as... as we speak... off one eight uh, right.		
0835:15 HOT-2	[sound of chuckle] I called up & cause last night when I was walking home you know like-er walking-		
0835:19 HOT-1	uh huh.		
0835:20 HOT-2	-to the bus.		
0835:21 HOT-2	I was like you know... & told me that m- she's givin me the shift but it might change before... all was said and done-		
0835:29 HOT-1	uh huh.		
0835:29 HOT-2	-you know like I just wanna make sure that I'm not on re-serve tomorrow, and that I'm assigned this shift and she's like just acted I could see her on the other side of the phone lookin at me like I had two heads. like you know like what the heck is your problem, like hey just makin sure... she's like no, that's right... you're... doin the shift like okay.		
0835:48 HOT-1	well as far as I'm concerned if they don't get us in uh... Greenville/Spartanburg... we're through.		
0835:53 HOT-2	yeah... totally.		

INTRA-COCKPIT COMMUNICATION		AIR-GROUND COMMUNICATION	
TIME and SOURCE	CONTENT	TIME and SOURCE	CONTENT
0835:55 HOT-2	ahhhh the uh taxi checklist. flight controls free and correct, trims are set, pressurization is set... flight instruments... two niner seven five set and cross checked.		
0836:05 HOT-1	seven five. set and cross checked.		
0836:07 HOT-1	we're goin to spot two, correct?		
0836:08 HOT-2	yeah I agree.		
0836:09 HOT-2	aux pumps?		
0836:09 HOT-1	off.		
0836:10 HOT-2	auto-feather?		
0836:10 HOT-1	armed.		
0836:10 HOT-2	ice protection?		
0836:11 HOT-1	standard six.		
0836:11 HOT-2	clearance radio takeoff landing data are cleared to uh Greenville/Spartanburg... HUGO five departure... radar vectors to Spartanburg.		

INTRA-COCKPIT COMMUNICATION		AIR-GROUND COMMUNICATION	
TIME and SOURCE	CONTENT	TIME and SOURCE	CONTENT
0836:19 HOT-2	up to four thousand feet fifty two twenty four is a good squawk... speeds are four four... twelve and twenty three.		
0836:26 HOT-2	that's reviewed.		
0836:26 HOT-1	hundred four hundred four-		
0836:27 HOT-2	crew briefing.		
0836:27 HOT-1	-(hundred)one twelve one twenty three. I'll take us out to Greenville/Spartanburg standard brief-		
0836:30 HOT-2	all right.		
0836:30 HOT-1	for the day-		
0836:31 HOT-2	*.		

INTRA-COCKPIT COMMUNICATION		AIR-GROUND COMMUNICATION	
TIME and SOURCE	**CONTENT**	**TIME and SOURCE**	**CONTENT**
0836:31 HOT-1	be an engine fire prior to be- V1 the noting pilot call abort abort the flying port-pilot abort takeoff... any (other) malfunction * my attention I'll (state) abort abort or continue. Any emergen- we will continue run the approprit memr items checkl fifteen hundred feet we'll make... right traffic one eight right... if we have any problems... we're at max weight... no alternate needed into Greenville/Spartanburg. one MEL it's due, it's written up on the sixth, due on the seventeenth checklist in the box, you have any questions? [phonetic spelling used for some words to indicate how they sound as heard by the group]		
0836:57 HOT-2	no questions... briefs complete, taxi checks complete.		
0837:06 CAM/HOT	[sound of clinking]		
0837:10 HOT-2	I thought my TOLD [take off/landing data] card was headed towards TOLD card heaven.		
0837:13 HOT-1	oh yeah.		
0837:14 HOT-2	[sound of chuckle]		
0837:14 HOT-1	what up there in the pedals?		
0837:15 HOT-2	yeah underneath yeah way down in the hole.		

INTRA-COCKPIT COMMUNICATION		AIR-GROUND COMMUNICATION	
TIME and SOURCE	**CONTENT**	**TIME and SOURCE**	**CONTENT**
		0837:20.0 RDO-2	Charlotte ground very good morning Air Midwest fifty four eighty one, approachin spot two with Lima.
		0837:30 GND	spot two Air Midwest uh, fifty four eighty one?
		0837:32.7 RDO-2	yes sir.
		0837:35 GND	Air Midwest uh-
0837:36 HOT-2	[sound of chuckle]		
		0837:36 GND	fifty four eighty one Charlotte ground roger... standby just a moment.
		0837:40.2 RDO-2	standing by.
0837:47 HOT-1	uhhh. Gulfstream.		
0837:50 HOT-2	you just wanna fly a jet. [sound of laughter]... I don't blame ya.		
		0838:01.6 GND	Air Midwest fifty four eighty one Charlotte ground taxi to runway one eight right.

INTRA-COCKPIT COMMUNICATION		AIR-GROUND COMMUNICATION	
TIME and SOURCE	**CONTENT**	**TIME and SOURCE**	**CONTENT**
		0838:05.8 RDO-2	to one eight right Air Midwest fifty four eighty one good day.
0838:09 HOT-1	that guy doesn't have his fancy voice on today.		
0838:14 HOT-2	see I thought it was I thought... that this was the guy with the fancy voice too and I so one morning I said like how you doing A.D.? cause * the guy with the fancy voice told me his name was A.D. or I think that's his first and last name initials.		
0838:25 HOT-1	uh huh.		
0838:25 HOT-2	clear on the right.		
0838:26 HOT-2	anyway so so one morning I'm talking to this guy and * how you doing A.D.? he goes this isn't A.D. this is T.K.... and so I'm like oh, sorry about that. It'll never happen again he's like it's okay a lot of people confuse us.		
0838:51 HOT-2	I got the ratchet down seat.		
0838:53 HOT-1	oh I hate that seat.		
0838:55 HOT-2	[sound of chuckle]		

INTRA-COCKPIT COMMUNICATION		AIR-GROUND COMMUNICATION	
TIME and SOURCE	CONTENT	TIME and SOURCE	CONTENT
0838:59 HOT-2	I still haven't had it - I've heard those-all those stories about how like... you'd be flyin along and the Captain will have the rachet down seat and be flyin an ILS or something and all of a sudden it'd go clunk clunk clunk and it be like-		
0839:08 HOT-1	ah you never had that?		
0839:09 HOT-2	-stuck nu-no. [sound of laughter]		
0839:10 HOT-1	# when you're in the flare (or something - you're like) #... wham.		
0839:12 HOT-2	[sound of laughter] I that's what... I think I'd die laughing cause I heard like you know the Captains just start cussin up a storm (because) they're so pissed off you know like right when you you know need the seat to be like good and * solid you go like click click click [sound of chuckle] I've had it when we're taxiing around like (we'll) just be sitting here all a sudden it'll go three notches down.		
0840:16 HOT-2	I think you're right I think they didn't get squat done at the... at the... negotiation session yesterday... I got no email.		
0840:24 HOT-1	you didn't?		
0840:25 HOT-2	nah.		

INTRA-COCKPIT COMMUNICATION		AIR-GROUND COMMUNICATION	
TIME and SOURCE	**CONTENT**	**TIME and SOURCE**	**CONTENT**
0840:27 HOT-1	I... * * I don't even know if I checked my uh * .		
0840:37 HOT-2	have you every seen cad-the movie Caddyshack?		
0840:39 HOT-1	yeah. [sound of chuckle]		
0840:40 HOT-2	have you seen it very recently at all?		
0840:41 HOT-1	huh uh.		
0840:42 HOT-2	I don't know if you remember or not but Rodney Dangerfield drives this like Bently or Rolls Royce or somethin that's got this really obnoxious horn that goes like (doo da da doo da) *.		
0840:51 HOT-1	ah uh-huh.		
0840:52 HOT-2	I can't make I can't make the sound... anyway like when every time he shows up somewhere he hits the horn and it plays this whole long thing [sound of chuckle]. and * I'se I'se lookin for... the other day I was bored * I went on the inter-net and I was lookin for um... sound files like for alert sounds you know how like if you do something wrong your computer beeps at you?		
0841:10 HOT-1	yeah.		

INTRA-COCKPIT COMMUNICATION		AIR-GROUND COMMUNICATION	
TIME and SOURCE	CONTENT	TIME and SOURCE	CONTENT
0841:11 HOT-2	instead of just like the stupid beep I was lookin for somethin a little more fun... so so I found this I don't know how I came across it but I found... a sound clip of that just that car horn going off-		
0841:21 HOT-1	really.		
0841:22 HOT-2	[sound of laughter] and so... and so I uh... I changed the alert for when I have incoming email on my email program to that car horn-		
0841:31 HOT-1	uh oh, god.		
0841:32 HOT-2	cracks (me)... I start laughing every time 'cause like you couldn't possibly miss the um email cause it plays * this long obnoxious car horn sound... it's great.		
0841:42 HOT-1	I have that jungle uh... screensaver on my computer.		
0841:46 HOT-2	oh cool.		
0841:47 HOT-1	you know if you leave it playin after a while yuh * if you leave the sound on you'll start to hear the birds squawkin and the monkeys yellin and the-		
0841:54 HOT-2	nice.		

INTRA-COCKPIT COMMUNICATION		AIR-GROUND COMMUNICATION	
TIME and SOURCE	**CONTENT**	**TIME and SOURCE**	**CONTENT**
0841:55 HOT-1	[sound of laughter] it's pretty annoying when you're tryin to sleep and you're too lazy to go turn your computer off.		
0841:59 HOT-2	[sound of laughter]		
0842:02 HOT-1	the thing is, is I-		
0842:02 HOT-2	I * know * happenin.		
0842:04 HOT-2	[sound of laughter] that's awesome. I would do like the same thing it's like ahh make it go away. [sound of laughter] and I'd be like totally too lazy to get up...* do anything about it.		
0842:18 HOT-2	this is peachy look at the split here. [sound of chuckle]		
0842:21 HOT-1	yeah.		
0842:23 HOT-2	[sound of laughter]		
0842:31 HOT-1	before takeoff to the line please.		
0842:31 HOT-2	before takeoff to the line flaps set and indicating seventeen, Props?		

INTRA-COCKPIT COMMUNICATION		AIR-GROUND COMMUNICATION	
TIME and SOURCE	CONTENT	TIME and SOURCE	CONTENT
0842:33 HOT-1	high.		
0842:33 HOT-2	auto-ignition?		
0842:34 HOT-1	armed.		
0842:34 HOT-2	engine anti-ice?		
0842:34 HOT-1	off.		
0842:35 HOT-2	parking brake?		
0842:35 HOT-1	is released.		
0842:36 HOT-2	'nunciators are considered.		
0842:38 HOT-2	that's before takeoff to the line.		
0842:42 HOT-2	two fifty at fourteen... (a) l'il breezy... must be a front blowin through or something.		
0842:56 HOT-2	I wonder what comes out of the very smallest whole in the center of the... of the... um power section there... see that there's-		

INTRA-COCKPIT COMMUNICATION		AIR-GROUND COMMUNICATION	
TIME and SOURCE	CONTENT	TIME and SOURCE	CONTENT
0843:03 HOT-1	well *.		
0843:03 HOT-2	-just like a really * you think that's all compressor air?		
0843:07 HOT-1	yeah I think that uh well no no no I think it's uh the air that actually comes out of the... well I'm not sure.		
0843:17 HOT-2	see which one I mean?		
0843:18 HOT-1	yeah.		
0843:19 HOT-2	or maybe that's not even maybe that's not even ah hole maybe that's just like... part of the assembly that all the compressor-		
0843:23 HOT-1	yeah I bet it's uh-		
0843:24 HOT-2	-blades turn on.		
0843:25 HOT-1	it's like uh shaft or something.		
0843:27 HOT-2	yeah exactly. exactly.		
0843:28 HOT-1	or screwed in *.		

TIME and SOURCE	INTRA-COCKPIT COMMUNICATION CONTENT	TIME and SOURCE	AIR-GROUND COMMUNICATION CONTENT
0843:29 HOT-2	yeah.		
0843:29 HOT-1	because... I was gonna say maybe that's where they route the air... that has been uh... actually compressed but that's - I mean not compressed but that's actually hit the burner.		
0843:39 HOT-2	oh yeah uh huh.		
0843:49 HOT-2	although it might be if you ever look at like uh... Airbus or those kinda engines see they they come to a really small point at the very end... the very back end.		
0843:56 HOT-1	oh yeah.		
0843:59 HOT-1	but I'm not sure if that has-actually does anything.		
0844:02 HOT-2	yeah, I'm not either... I be I'd be kinda interested to... go through the systems in the CRJ that'd be sweet.		
0844:10 HOT-1	thirty... how bout thirty fifty and uh... twenty two... when you call the times.		
0844:17 HOT-2	sounds good... oh my clock's still set back from last night. [sound of laughter]		

INTRA-COCKPIT COMMUNICATION		AIR-GROUND COMMUNICATION	
TIME and SOURCE	**CONTENT**	**TIME and SOURCE**	**CONTENT**
0844:49 HOT-2	gosh that sure is a nice looking plane... awe. it's killin me to see those pla-those CRJs back here now. it's probably I should I should shutup you're I'm I'm doing to you right now what you were doing to me with the Krispy Kremes yesterday.		
0845:01 HOT-1	[sound of laughter]		
0845:02 HOT-2	[sound of laughter]		
0845:05 HOT-1	at least I got & to eat one.		
0845:07 HOT-2	[sound of laughter] didja? nice.		
0845:10 HOT-2	& was probably lookin for any excuse he could find to eat one.		
0845:18 HOT-1	sometimes I secretly go get them at the grocery store.		
0845:21 HOT-2	oh yeah? yeah. I've been known to do that from time to time.		
0845:25 HOT-2	awe.		
		0845:25.5 TWR	Air Midwest fifty four eighty one, runway one eight right, taxi into position and hold.

INTRA-COCKPIT COMMUNICATION		AIR-GROUND COMMUNICATION	
TIME and SOURCE	**CONTENT**	**TIME and SOURCE**	**CONTENT**
		0845:28.9 RDO-2	position and hold runway one eight right Air Midwest fifty four eighty one.
0845:33 HOT-2	uh... below the line, transponder's ALT mode and bleeds are set. and exterior lights?		
0845:37 HOT-1	are set.		
0845:38 HOT-2	before takeoff checklist is complete... clear on the right.		
0845:43 HOT-1	*.		
0845:44 HOT-2	position and hold.		
0845:45 HOT-1	clear on the left... this guy's * goin away.		
0845:46 HOT-2	uhh they're gonna blast us... with his... jet blast.		
0845:50 HOT-1	I love those Krispy Kreme doughnuts with the uh... the icing filling on the inside.		
0845:55 HOT-2	awe... you know * I was just sayin * I started to say awe right before he told us to taxi in position and hold-you need to get a box of those and wrap them up in wedding gift wrap paper and take them to &'s wedding [sound of laughter]		

INTRA-COCKPIT COMMUNICATION		AIR-GROUND COMMUNICATION	
TIME and SOURCE	**CONTENT**	**TIME and SOURCE**	**CONTENT**
0846:05 HOT-1	[sound of laughter] that's a good call.		
0846:06 HOT-2	[sound of laughter]		
0846:07 HOT-1	I'm gonna do that.		
0846:08 HOT-2	like a huge box... you know like the size box last * that was in the crew room yesterday.		
0846:13 HOT-1	that is awesome idea.		
0846:14 HOT-2	[sound of laughter]		
0846:16 HOT-2	wouldn't that be great?		
0846:17 HOT-1	yeah.		
		0846:18.2 TWR	Air Midwest fifty four eighty... one turn right heading two three zero, cleared for takeoff.
		0846:22.0 RDO-2	two three zero cleared for takeoff *Air Midwest fifty four eighty one.
0846:26 HOT-2	two thirty, cleared to go.		

INTRA-COCKPIT COMMUNICATION		AIR-GROUND COMMUNICATION	
TIME and SOURCE	**CONTENT**	**TIME and SOURCE**	**CONTENT**
0846:28 CAM	[sound similar to engine power increasing]		
0846:35 HOT-1	set takeoff power please.		
0846:35 HOT-2	power is set.		
0846:40 HOT-2	* * * push.		
0846:43.9 HOT-2	eighty knots, cross checked.		
0846:49.6 HOT-2	V-one V-R.		
0846:52.8 HOT-2	V-two.		
0846:55.2 HOT-2	positive rate.		
0846:55.8 HOT-1	gear up.		
0846:58.5 CAM	[sound similar to landing gear hydraulic motor operating begins]		
0847:02.1 HOT-2	wuh.		

INTRA-COCKPIT COMMUNICATION		AIR-GROUND COMMUNICATION	
TIME and SOURCE	**CONTENT**	**TIME and SOURCE**	**CONTENT**
0847:02.2 CAM	[sound similar to landing gear hydraulic motor operating ends]		
0847:02.2 HOT-1	oh.		
0847:03 HOT-1	help me.		
0847:03 HOT-2	* *.		
0847:03.5 CAM	[sound of click]		
0847:04 HOT-1	you got it?		
0847:05 HOT-2	oh #.		
0847:05 HOT-1	[sound of grunt/exhale]		
0847:05 HOT-2	push down.		
0847:06 HOT-2	[sound of breath]		
0847:07 HOT-2	oh #.		

INTRA-COCKPIT COMMUNICATION		AIR-GROUND COMMUNICATION	
TIME and SOURCE	CONTENT	TIME and SOURCE	CONTENT
0847:08 CAM/HOT	[sound similar to single landing gear warning horn - duration approximately 0.4 sec.]		
0847:08 HOT-2	[sound of grunt/exhale]		
0847:09 HOT-1	[sound of grunt/exhale]		
0847:09 CAM	[sounds similar to change in engine/propeller noise].		
0847:09 HOT-1	[sound of grunt/exhale]		
0847:10 HOT-1	you uh.		
0847:10.8 CAM	[sound similar to stall warning horn begins]		
0847:11 HOT-1	[sound of grunt/exhale]		
0847:12 HOT-1	[sound of grunt/exhale]		
0847:11.8 HOT-1	push the nose down. [loud voice]		
0847:13 HOT-2	[sound of grunt/exhale - loud voice]		
0847:13 HOT-1	ahh. [loud voice]		

INTRA-COCKPIT COMMUNICATION		AIR-GROUND COMMUNICATION	
TIME and SOURCE	**CONTENT**	**TIME and SOURCE**	**CONTENT**
0847:14 HOT-1	oh my god.		
0847:16 HOT-1	[sound of grunt/exhale]		
		0847:16.4 RDO-1	we have an emergency for Air-mwest fifty four eighty one.
0847:16.6 CAM	[sound similar to stall warning horn ends]		
0847:18 CAM/HOT	(daddy) [unidentified voice other than crewmember - at a reduced volume]		
0847:18.2 CAM/HOT	[sound of several clicks or clunks]		
0847:20.4 CAM/HOT	[sound similar to landing gear warning horn begins]		
0847:20.6 CAM	[sound similar to decrease in engine/propeller noise]		
0847:20.7 HOT-1	pull the power back.		
0847:21.7 CAM/HOT	[sound similar to stall warning horn begins and continues to end of recording]		
0847:23.6 CAM	[sound similar to landing gear warning horn ends]		

INTRA-COCKPIT COMMUNICATION		AIR-GROUND COMMUNICATION	
TIME and SOURCE	CONTENT	TIME and SOURCE	CONTENT
0847:24 CAM	[sound similar to increase in engine/propeller noise]		
0847:26 HOT-1	oh my god ahh.		
0847:26 HOT-2	(uh uh god ahh #)		
0847:26.3 CAM	[sound similar to landing gear warning horn begins and continues to end of recording]		
0847:28.1 CAM	[end of recording]		

Appendix C
Air Midwest's Elevator Control System Rigging Procedure at the Time of the Accident

Raytheon Aircraft

BEECH 1900D AIRLINER MAINTENANCE MANAUL

ELEVATOR CONTROL RIGGING - MAINTENANCE PRACTICES

ELEVATOR CONTROL SYSTEM RIGGING

CAUTION

If a FA2100 Flight Data Recorder System is installed on this aircraft, perform the LINK removal portion of the ELEVATOR SURFACE POSITION SYNCHRO TRANSMITTER (SENSOR) REMOVAL procedure. Refer to Chapter 31-31-12 in the BEECH 1900D AIRLINER FLIGHT DATA RECORDER (FA2100) MAINTENANCE MANUAL SUPPLEMENT, P/N 129-590000-109.

CAUTION

Where the cables pass through structure, the areas of possible contact between the control cables and adjacent structure must be protected with grommets, rub strips, block or guide fairings. Where contact of control cables does occur with the protective elements, a force no greater than eight (8) ounces shall be required to move the cable to a position of no contact. At no time should flight control cables contact metal structure.

a. Disconnect the autopilot servo cables. Refer to Chapter 22.

b. Locate and remove all access panels from the vertical and horizontal stabilizers to gain access to the aft elevator bellcrank and the elevator cables. Refer to Chapter 6.

c. Locate and remove the flight compartment seats, carpet, and floorboards to gain access to the forward elevator bellcrank. Refer to Chapters 6 and 25.

d. Locate and remove the passenger seats, carpet, and floorboards on the right side of the passenger compartment to gain access to the elevator cable turnbuckles. Refer to Chapters 6 and 25.

e. Install an elevator travel board (5, Chart 1, 27-00-00) on each elevator at station 50.00.

f. Adjust the center-to-center length of the push-pull tube assembly between the control column and the forward elevator bellcrank to a dimension of 15.12 ± 0.06 inch.

g. Adjust the surface stop bolts on the elevator control horn support for up-travel of 20° + 1° - 0° and down-trave of 14° + 1° - 0°. Refer to Figure 201.

h. Verify the bob weight stop bolt clearance is 0.5 ± 0.06 inch. Adjust if necessary. Refer to Chapter 27-30-01, Figure 201.

i. Adjust the forward bellcrank stops for 0.37 ± 0.06 inch clearance from the stop bolts. Refer to Figure 202.

j. Verify the forward bellcrank stop bolts make contact before the bob weight stop bolts make contact with the weight.

k. Install a rig pin in the aft elevator bellcrank. Refer to Chapter 27-30-01, Figure 201.

NOTE

Verify threads are visible through the inspection holes at the ends of the pushrods after adjustments are made.

l. Adjust the pushrods between the aft elevator bellcrank and the elevator to position the elevator at neutral (0° deflection).

m. Remove the rig pin from the aft elevator bellcrank.

n. Remove the safety clips from the turnbuckles and release cable tension.

o. Move the control yoke to install the rig pin in the forward elevator bellcrank.

p. Tighten the elevator-up cable until the elevator rises to neutral (0° on the travel board).

q. Tighten the elevator-down cable until the average tension of the up- and down-cables is 66 ± 8 pounds (the sum of up-cable and down-cable tensions, divided by two). Refer to Figure 203.

r. Continue to balance the adjustment of the two cables until the average tension is 66 ± 8 pounds while maintaining 0° deflection of the elevator.

s. Perform the CONTROL COLUMN SUPPORT ROLLER INSPECTION procedure of this Chapter.

t. Install safety clips on the turnbuckles.

u. On aircraft equipped with the F1000 Flight Data Recorder, calibrate the Pitch Position Potentiometer. Perform the FLIGHT DATA RECORDER (FDR) - PITCH ADJUSTMENT procedure. Refer to Chapter 31-30-00.

v. Remove the travel boards from the horizontal stabilizers.

w. Connect the autopilot servo cables to the elevator primary control cables. Refer to Chapter 22.

x. Install the seats, carpet and floorboards. Refer to Chapters 6 and 25.

y. Replace all access panels.

ELEVATOR CONTROL SYSTEM FRICTION TEST

NOTE

Take all force readings with the elevator control system completely installed: downsprings attached, cables rigged with tension applied, bob weight mounted on control yoke, and autopilot servo cables attached.

a. Use a hand-held force gage attached and centered between inboard grips of the pilot's and copilot's control wheels.

b. Take five force-measurements by pulling the control wheels straight in line with the column from the fully forward (elevator down) position, through neutral, to the fully aft (elevator up) position. Read the force gage as the control wheels pass through neutral.

c. Average the five readings and record this value as F up.

d. Take five force-measurements by pushing the control wheels straight in line with the column from the fully aft (elevator up) position, through neutral, to the fully forward (elevator down) position. Read the force gauge as the control wheels pass through neutral.

e. Average the five readings and record this value as F down.

f. To determine the maximum allowable system friction, Fs(max), measure the tension of both elevator cables,

take the higher of the two readings, and multiply it by a factor of 0.106. For example:

Fs(max) = 0.106 X Highest Cable Tension

Example:

Highest Cable Tension = 98 lbs.

Fs(max) = 0.106 X 98 lbs.

Fs(max) = 10.4 lbs.

g. With the maximum allowable system friction established, use the force measurements to calculate the actual system friction. System friction value is obtained by dividing the difference of the up and down force values by 2, or:

Fs = (F up - F down) ÷ 2

Example:

F up = 48 lbs., F down = 32 lbs.

Fs = (F up - F down) ÷ 2

Fs = (48 - 32) ÷ 2 = 16 ÷ 2 = 8 = acceptable.

h. Combined downspring and bob-weight-force range (Fc) is 40.0 ± 1.5 lbs.

i. Combined downspring and bob weight force is obtained by adding the up and down values then dividing by 2, or:

Fc = (up + down) ÷ 2

Example:

F up = 48 lbs., F down = 32 lbs.

Fc = (F up + F down) ÷ 2

Fc = (48 + 32) ÷ 2 = 80 ÷ 2 = 40 = acceptable

j. If Fc is above the range of 40.0 ± 1.5 lbs., decrease the downspring tension by moving it further out on the adjustment link. If Fc is below the proper range, increase tension by moving it further in on the adjustment link.

NOTE

If system friction-force cannot be brought under the limit, check cable installation, pulley bearings, bellcrank bearings, push-pull rod ends, the control yoke, control column support rollers and all linkages associated with the elevator control.

k. Verify that the elevator installation is within the following limitations:

1. With the elevator deflected fully up or down, the distance at the closest point between the trailing edge of the horizontal stabilizer and the elevator skin shall be 0.187 +0.1/ -0.05 inch.

2. The minimum gap between the inboard edge of the elevator and the vertical stabilizer shall be 0.12 inch.

NOTE

It is permissible to trim the edge of the elevator by up to 0.06 inch in order to achieve the required distance. If trimming is required, the elevator should be checked for balance.

NOTE

If a FA2100 Flight Data Recorder System is installed on this aircraft, perform the LINK installation portion of the ELEVATOR SURFACE POSITION SYNCHRO TRANSMITTTER (SENSOR) INSTALLATION procedure in Chapter 31-31-12 of the BEECH 1900D AIRLINER FLIGHT DATA RECORDER (FA2100) MAINTENANCE MANUAL SUPPLEMENT, P/N 129-590000-109.

CONTROL COLUMN SUPPORT ROLLER INSPECTION

a. Remove the four screws (9) in each cover (10) that secure the covers over the control column support rollers where the control column passes through the instrument subpanel. Refer to Figure 204.

b. Inspect rollers (3 and 8), eccentric bolts (1) and nuts (5) for condition. Replace rollers with flat spots and replace damaged parts as required. If a nut is removed, it must be replaced with a new self-locking nut.

WARNING

Be sure the self-locking nuts (5) at the lower end of the eccentric bolts are properly torqued. When the adjustment is complete, the eccentric bolts must not turn or change position.

c. The upper two rollers are mounted on eccentric shaped bolts (1) that allow adjustment. The lower roller (8) is mounted on a screw and is not adjustable. Adjust the two eccentric bolts on each crew station around the control column as necessary to provide a minimum of .010 inch of play between the columns and the rollers. Torque the self-locking nuts to 15 -19 inch pounds.

d. If applicable, remove the rig pin from the forward elevator bellcrank.

e. Move the control columns all the way in and out to verify they are not too tight and that they do not bind in the rollers at any position.

f. Install the covers over the control column support rollers.

Raytheon Aircraft

BEECH 1900D AIRLINER MAINTENANCE MANAUL

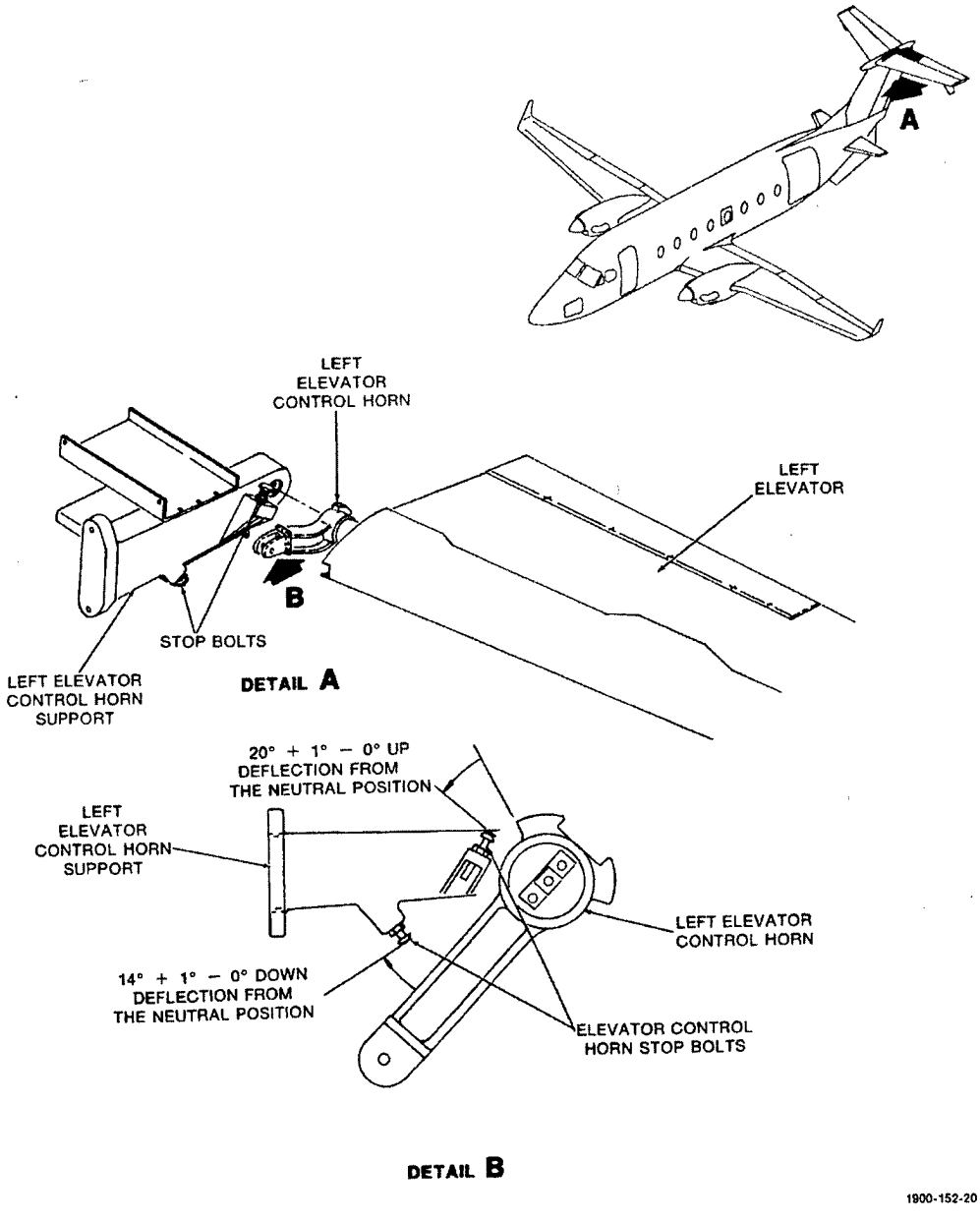

Figure 201 - Elevator Control Horn Stop Bolts

Raytheon Aircraft

BEECH 1900D AIRLINER MAINTENANCE MANAUL

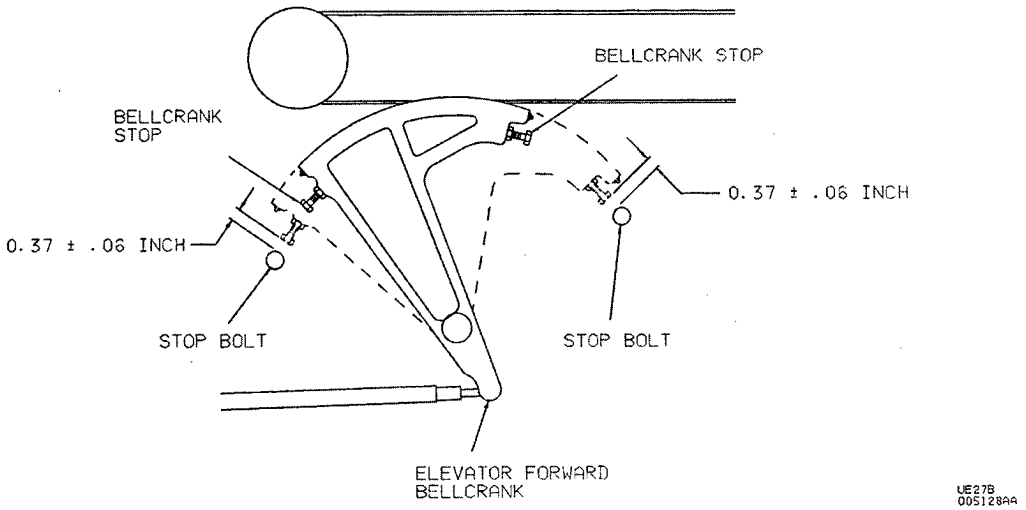

Figure 202 - Elevator Forward Bellcrank Stops

Raytheon Aircraft

BEECH 1900D AIRLINER MAINTENANCE MANAUL

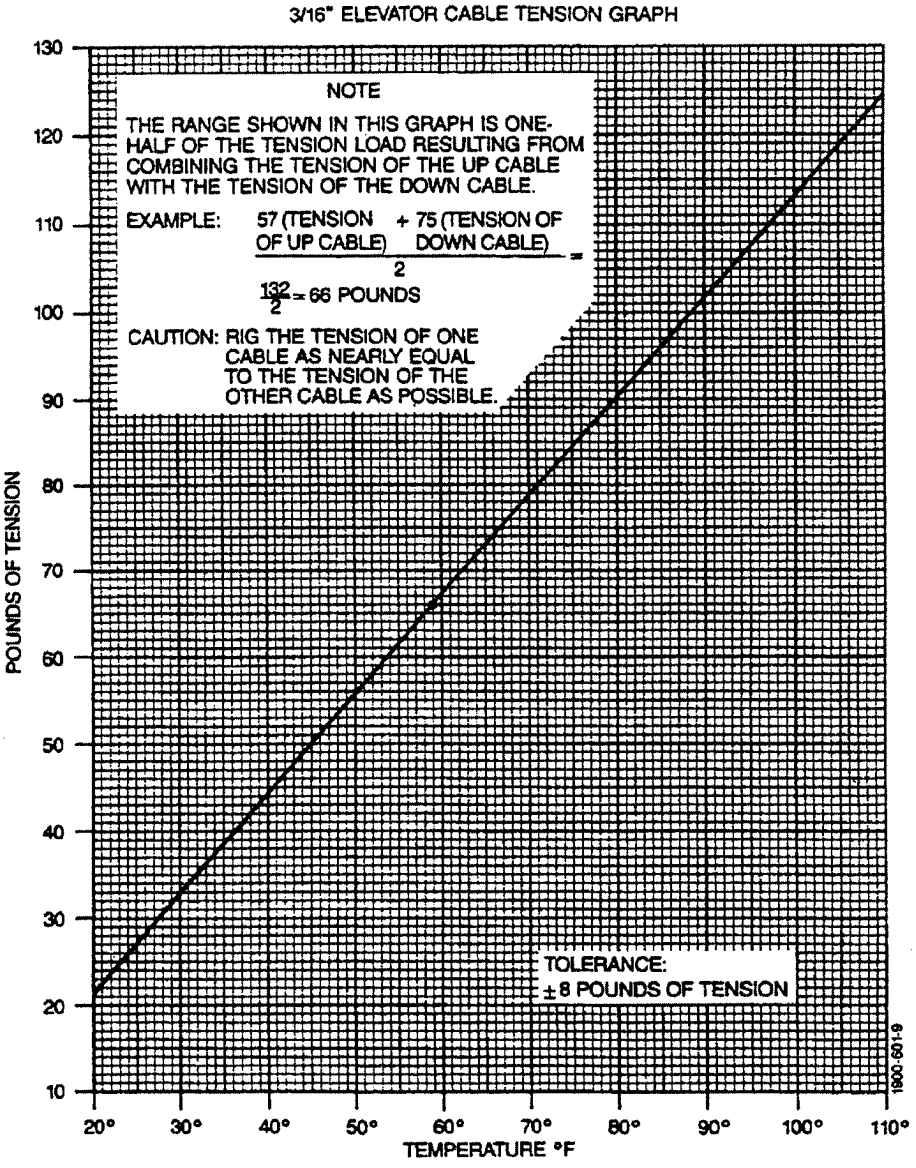

Figure 203 - Elevator Cable Tension Graph

Raytheon Aircraft

BEECH 1900D AIRLINER MAINTENANCE MANAUL

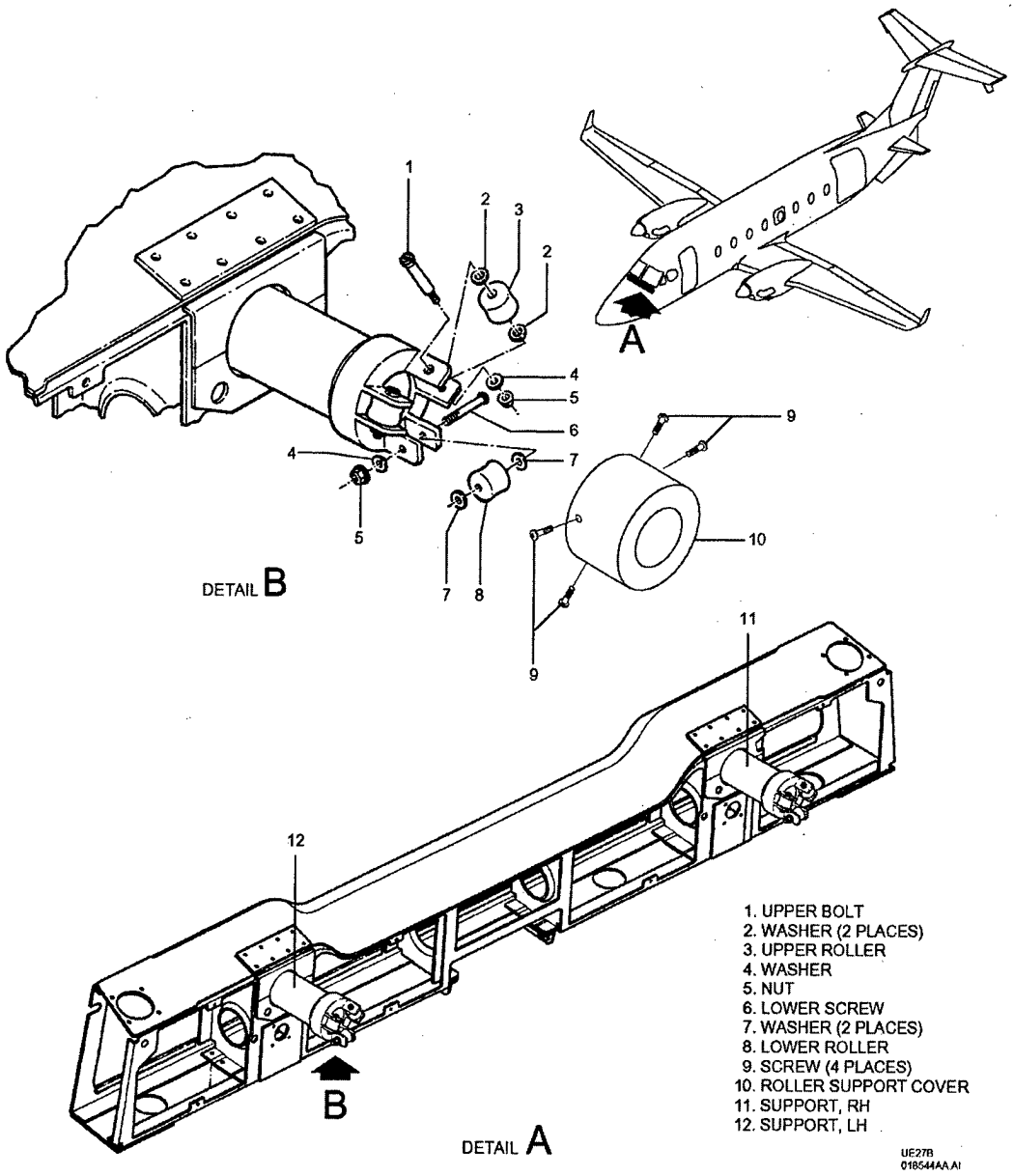

Figure 204 - Control Column Rollers

Appendix D
Air Midwest's Revised Elevator Control System Rigging Procedure

Raytheon Aircraft

BEECH 1900D AIRLINER MAINTENANCE MANUAL

Manual Affected: Beech 1900D Airliner Maintenance Manual (129-590000-15A)

Instructions: Insert pages 5 through 8 prior to page 201, Chapter 27-30-02.

Reason: The ELEVATOR CONTROL SYSTEM RIGGING procedure is replaced by the data in this Temporary Revision.

ELEVATOR CONTROL SYSTEM RIGGING

WARNING

THE GUST LOCK PIN MUST NOT BE USED FOR RIGGING THE ELEVATOR CONTROL SYSTEM EXCEPT WHEN PERFORMING THE GUST LOCK PIN CHECK PORTION OF THIS PROCEDURE.

CAUTION

If a FA2100 Flight Data Recorder System is installed on this aircraft, perform the LINK removal portion of the ELEVATOR SURFACE POSITION SYNCHRO TRANSMITTER (SENSOR) REMOVAL procedure. Refer to Chapter 31-31-12 in the BEECH 1900D AIRLINER FLIGHT DATA RECORDER (FA2100) MAINTENANCE MANUAL SUPPLEMENT, P/N 129-590000-109.

CAUTION

Where the cables pass through structure, the areas of possible contact between the control cables and adjacent structure must be protected with grommets, rub strips, block or guide fairings. Where contact of control cables does occur with the protective elements, a force no greater than eight (8) ounces shall be required to move the cable to a position of no contact. At no time should flight control cables contact metal structure.

NOTE

DISCONNECT THE AUTOPILOT SERVO CABLES TO THE ELEVATOR PRIMARY CONTROL CABLES. REFER TO CHAPTER 22.

a. Locate and remove all access panels from the vertical and horizontal stabilizers to gain access to the aft elevator bellcrank and the elevator cables. Refer to Chapter 6.

b. Install a rig pin in the aft elevator bellcrank. Refer to Chapter 27-30-01, Figure 201.

c. Remove lock clips from turnbuckles. Release cable tension.

d. Locate and remove the copilot's seat, carpet, and floorboards to gain access to the forward elevator bellcrank. Refer to Chapters 6 and 25.

e. Adjust the center-to-center length of the push-pull tube assembly between the control column and the forward elevator bellcrank to a dimension of 15.17 + 0.19/-0.06 inch. This push-pull tube is to be adjusted if needed to meet the bob weight stop clearance requirement or to meet the gust lock pin check.

f. Install the rig pin in the forward elevator bellcrank (located below the floorboard forward of the copilot's seat tracks (Floorboard Panel 122BT in Chapter 6-50-00)). Move the control column as required to align the rig pin holes.

NOTE

CHECK ELEVATOR TRAVEL WITH TRAVEL BOARDS (5, CHART 1, 27-00-00). ONE TRAVEL BOARD SHOULD BE MOUNTED ON EAC H HORIZONTAL STABILIZER AT HSS 50.00.

g. Disconnect the elevator pushrods from the aft bellcrank.

h. Adjust the surface stops on the control horn support for up travel of 20° + 1°/ - 0°; and down travel of 14° + 1° / - 0°. Refer to Figure 201.

NOTE

INSURE THAT THREADS ARE VISIBLE THROUGH THE INSPECTION HOLE AT THE END OF THE PUSHROD, AFTER ADJUSTMENTS ARE MADE.

i. Adjust the elevator bellcrank pushrod ends as required to obtain 0 readings on the travel boards for both elevators. Tighten the locknuts.

j. Connect pushrods to the aft elevator bellcrank.

k. Use a cable tensiometer to measure control cable tension

l. Tighten elevator control cables uniformly to the center of the maximum and minimum tensions. Refer to Figure 203.

m. Slowly adjust the elevator cable(s) as required until the rig pin in the forward bellcrank will fit with minimum insertion force.

n. Remove the rig pin from the forward bellcrank.

o. Read the cable tension of both cables. Record the values as T up and T down. The allowable limit for combined cable tension is 66 ± 8.0 lbs. Compute the combined tension load (Tc) by adding the up and down values together and dividing by 2, or:

Tc = (T up + T down) / 2
Example:
T up = 57 lbs., T down = 75 lbs.
Tc = (T up + T down) / 2
$Tc = \frac{57 + 75}{2} = \frac{132}{2}$ = 66 lbs. = acceptable

p. Compare the combined tension load to cable tension graph. Refer to Figure 203.

q. If the combined tension load is above the maximum range, start the procedures over and set cable tension at the minimum, or shorten the pushrod of the forward elevator bellcrank and repeat Steps l through p.

r. Install lock clips on turnbuckles.

s. Remove the rig pin from the aft elevator bellcrank.

t. Set the forward elevator bellcrank stop bolts for a clearance of 0.37 ± 0.06 inch. Refer to Figure 202.

u. Verify the bob weight stop bolt clearance is 0.5 ± 0.06 inch. Adjust the stop bolt, if necessary. Refer to Chapter 27-30-01, Figure 201. The push-pull tube assembly between the control column and the forward elevator bellcrank may need to be adjusted to achieve the required clearance (refer to Step e).

v. The forward elevator bellcrank stop bolt is to make contact before the bob weight stop bolt makes contact with the bob weight. In order to verify that the forward bellcrank bolt makes contact before the bob weight stop bolt makes contact with the bob weight it may be necessary to disconnect the pushrods at the elevator horns in order to allow enough travel to verify this action. Reconnect the pushrods after this contact has been verified.

w. **Gust Lock Pin Check** - Install the gust lock pin. Verify the elevator is 7° to 15° down (the elevator does not need to be on the down stop with the gust lock pin installed). However, if the elevator is full down and resting on the primary stops, the force required to push on the pilot's control wheel while inserting the gust lock pin must be a maximum of ten pounds. If the force is too high, adjust (shorten) the push-pull tube per Step e, then repeat Step u to check the bob weight clearance. Remove the gust lock pin.

x. Connect the autopilot servo cables to the elevator primary control cables. Refer to Chapter 22.

y. Perform the CONTROL COLUMN SUPPORT ROLLER INSPECTION procedure of this Chapter.

z. On aircraft equipped with the F1000 Flight Data Recorder, calibrate the Pitch Position Potentiometer. Perform the FLIGHT DATA RECORDER (FDR) - PITCH ADJUSTMENT procedure. Refer to Chapter 31-30-00.

NOTE

IF A FA2100 FLIGHT DATA RECORDER SYSTEM IS INSTALLED ON THIS AIRCRAFT, PERFORM THE LINK INSTALLATION PORTION OF THE ELEVATOR SURFACE POSITION SYNCHRO TRANSMITTER (SENSOR) REMOVAL PROCEDURE. REFER TO CHAPTER 31-31-12 IN THE BEECH 1900D AIRLINER FLIGHT DATA RECORDER (FA2100) MAINTENANCE MANUAL SUPPLEMENT, P/N 129-590000-109.

aa. Move the control wheel aft and verify the elevator moves up 20° +1°/-0° and that the surface stops make contact. Move the control wheel forward and verify the elevator moves down 14° +1°/-0° and that the surface stops make contact. If these requirements are not met, repeat this rigging procedure in its entirety.

ab. Remove the travel boards from the horizontal stabilizers, install floorboards, copilot's seat, and replace access panels.