AFRL-HE-WP-TR-2004-0007

# United States Air Force Research Laboratory

## A Novel In Vitro System for Exposures of Cell Cultures to Volatile Chemicals


**Kevin Geiss**

OPERATIONAL TOXICOLOGY BRANCH
HUMAN EFFECTIVENESS DIRECTORATE
AIR FORCE RESEARCH LABORATORY
WRIGHT-PATTERSON AFB, OH 45433-7400



20040706 102


**February 2004**

**FINAL REPORT FOR THE PERIOD JANUARY 1998 TO FEBRUARY 2001**

*Approved for public release; distribution is unlimited*

**Human Effectiveness Directorate**
**Biosciences and Protection Division**
**Applied Toxicology Branch**
**Wright-Patterson AFB OH 45433-7400**

## NOTICES

When US Government drawings, specifications or other data are used for any purpose other than a definitely related Government procurement operation, the Government thereby incurs no responsibility nor any obligation whatsoever, and the fact that the Government may have formulated, furnished, or in any way supplied the said drawings, specifications, or other data is not to be regarded by implication or otherwise, as in any manner licensing the holder or any other person or corporation, or conveying any rights or permission to manufacture, use, or sell any patented invention that may in any way be related thereto.

Please do not request copies of this report from the Air Force Research Laboratory. Additional copies may be purchased from:

National Technical Information Service
5285 Port Royal Road
Springfield, Virginia 22161

Federal Government agencies and their contractors registered with the Defense Technical Information Center should direct requests for copies of this report to:

Defense Technical Information Service
8725 John J. Kingman Rd., Ste 0944
Ft. Belvoir, Virginia 22060-6218

## DISCLAIMER

This Technical Report is published as received and has not
been edited by the Technical Editing Staff of the Air Force Research Laboratory.

## TECHNICAL REVIEW AND APPROVAL

**AFRL-HE-WP-TR-2004-0007**

The animal use described in this study was conducted in accordance with the principles stated in the "Guide for the Care and Use of Laboratory Animals", National Research Council, 1996, and the Animal Welfare Act of 1966, as amended.

This report has been reviewed by the Office of Public Affairs (PA) and is releasable to the National Technical Information Service (NTIS). At NTIS, it will be available to the general public, including foreign nations.

This technical report has been reviewed and is approved for publication.

**FOR THE DIRECTOR**

//SIGNED//

**MARK M. HOFFMAN**
Deputy Chief, Biosciences and Protection Division
Air Force Research Laboratory

# REPORT DOCUMENTATION PAGE

*Form Approved*
*OMB No. 0704-0188*

Public reporting burden for this collection of information is estimated to average 1 hour per response, including the time for reviewing instructions, searching existing data sources, gathering and maintaining the data needed, and completing and reviewing the collection of information. Send comments regarding this burden estimate or any other aspect of this collection of information, including suggestions for reducing this burden, to Washington Headquarters Services, Directorate for Information Operations and Reports, 1215 Jefferson Davis Highway, Suite 1204, Arlington, VA 22202-4302, and to the Office of Management and Budget, Paperwork Reduction Project (0704-0188), Washington, DC 20503.

**1. AGENCY USE ONLY** *(Leave blank)*

**2. REPORT DATE**
February 2004

**3. REPORT TYPE AND DATES COVERED**
Final Report- January 1998 - February 2004

**4. TITLE AND SUBTITLE**
A Novel In Vitro System for Exposures of Cell Cultures to Volatile Chemicals

**5. FUNDING NUMBERS**
Contract F41624-96-C-9010
PE 61102F
PR 2312
TA 2312A2
WU 2312A208

**6. AUTHOR(S)**
Geiss, Kevin

**7. PERFORMING ORGANIZATION NAME(S) AND ADDRESS(ES)**

**8. PERFORMING ORGANIZATION REPORT NUMBER**

**9. SPONSORING/MONITORING AGENCY NAME(S) AND ADDRESS(ES)**
Air Force Research Laboratory, Human Effectiveness Directorate
Biosciences and Protection Division
Counterproloferatiom Branch
Wright Patterson AFB, OH 45433-5707

**10. SPONSORING/MONITORING AGENCY REPORT NUMBER**
AFRL-HE-WP-TR-2004-0007

**11. SUPPLEMENTARY NOTES**

**12a. DISTRIBUTION AVAILABILITY STATEMENT**
Approved for public release; distribuition is unlimited

**12b. DISTRIBUTION CODE**

**13. ABSTRACT** *(Maximum 200 words)*

The potential toxic effects of chromophore powder in primary hepatocytes were investigated. Initially, a solubility assessment was conducted in aqueous and organic solutions. The solubility test showed that the chromophore powder is soluble in DMSO at 0.001 mg/ml, while not in water or ethyl alcohol. Therefore, DMSO was selected as the solvent for the dose range finding study. For initial toxicity evaluations, mitochondrial function (MTT assay), lactate dehydrogenase release (LDH assay) and the morphology of cells were assessed for primary hepatocytes under control or exposed conditions (2 hour treatment followed by 24 h of incubation in fresh media). The microscopic studies demonstrated that chromophore-exposed cells at the doses of 0.5 and 1 mg/ml became abnormal in size displaying shrinkage and irregular shape. The results showed that chromophore powder had no measurable effect on mitochondrial function. However, LDH assay showed a significant increase in LDH release at 0.1mg/ml, while there was no change at 0.5 and 1.0 mg/ml. The dose range finding study indicates that chromophore powder displayed limited toxicity *in vitro* at increasing dose.

**14. SUBJECT TERMS**
chromophore powder primary hepatocytes

**15. NUMBER OF PAGES**
29

**16. PRICE CODE**

| 17. SECURITY CLASSIFICATION OF REPORT | 18. SECURITY CLASSIFICATION OF THIS PAGE | 19. SECURITY CLASSIFICATION OF ABSTRACT | 20. LIMITATION OF ABSTRACT |
|---|---|---|---|
| UNCLASSIFIED | UNCLASSIFIED | UNCLASSIFIED | UL |

Standard Form 298 (Rev. 2-89) (EG)
Prescribed by ANSI Std. 239.18
Designed using Perform Pro, WHS/DIOR, Oct 94

THIS PAGE INTENTIONALLY LEFT BLANK.

## PREFACE

This is a final technical report describing results from the Predictive Toxicology Program conducted at AFRL/HEST. Predictive Toxicology research (JON# 2312A208) was supported by the Air Force Office of Scientific Research (AFOSR) under the direction of Dr. Walt Kozumbo (AFOSR). This report describes experiments concerning the development of a novel application of an *in vitro* exposure system for cell culturing. The research described in this report began January 1998 and was completed in February 2001 under U.S. Air Force Contract No. F41624-96-C-9010 (ManTech/Geo-Centers Joint Venture). Dr. Richard Stotts was the Contract Technical Monitor for the U.S. Air Force, Operational Toxicology Branch, Air Force Research Laboratory. The animal use described in this study was conducted in accordance with the principles stated in the "Guide for the Care and Use of Laboratory Animals", National Research Council, 1996, and the Animal Welfare Act of 1966, as amended.

THIS PAGE INTENTIONALLY LEFT BLANK.

## TABLE OF CONTENTS


| Section | Page |
|---|---|
| Table of Contents | i |
| List of Figures | ii |
| Preface | iii |
| I. INTRODUCTION | 1 |
| II. MATERIALS AND METHODS | 3 |
| III. RESULTS AND DISCUSSION | 14 |
| IV CONCLUSIONS | 19 |
| V. ACKNOWLEDGEMENTS | 20 |
| V. REFERENCES | 21 |

THIS PAGE INTENTIONALLY LEFT BLANK.

## LIST OF FIGURES

Figure Page

FIGURE 1 - Exposure Chamber - Early Design .....5
FIGURE 2 - The VITROBOX™.....6
FIGURE 3 - The First Two VITROBOX™ Chambers.....7
FIGURE 4 - System Set-up for Dosing the VITROBOX™.....9
FIGURE 5 - Example of Culturing Formats in the VITROBOX™.....11
FIGURE 6 - GC/MS Analysis of $CCl_4$ from VITROBOX™ Headspace.....15
FIGURE 7 - Headspace Concentration of $CCl_4$ over 16 h Incubation.....16
FIGURE 8 - MTT Assay Results Comparing Control Cells in Either VITROBOX™ or Standard Cell Culture Incubator for 4 h.....17
FIGURE 9 - MTT Assay Results Comparing Cell Cultures Exposed to $H_2O_2$ in Either the VITROBOX™ or Standard Incubator for 4 h.....17
FIGURE 10 - TBARS Assay Results for Cell Cultures Exposed to $CCl_4$ in the VITROBOX™ for 4 h.....18
FIGURE 11 - Catalase Enzyme Activity Results for Cell Cultures Exposed to $CCl_4$ in the VITROBOX™ for 4 h.....18

THIS PAGE INTENTIONALLY LEFT BLANK.

# I. INTRODUCTION

One major challenge for *in vitro* experiments with volatile chemicals is maintaining a consistent concentration of the chemical in the cell culturing media. Various engineering solutions have been developed to address this issue. However, the limitations and costs of those systems make them impractical for many research applications (Mückter et al., 1998; Suzuki et al., 1994; Steel-Goodwin et al., 1996; Thomas et al., 1992). Previously, researchers studying volatile organics have generally taken one of two approaches. The more common approach was to use a sealable culture vessel, such as a flask, into which the chemical was added to the media and then the vessel was sealed for the duration of the exposure (Suzuki et al., 1994; Thomas et al, 1992). One drawback for this system was the significant potential for inter-sample variation. Another drawback was the inability to work with cell culture plates that had lids which were not readily sealable. A second approach was to use a larger-sized incubator, which had a flow through or static renewal system to maintain a specific vapor concentration of the test article (Steel-Goodwin et al, 1996). One issue with this system was that the chemical and headspace volumes far exceeded what was necessary to perform a reasonably sized experiment (e.g. 5 plates per dose and generally containing less than 25 mL total volume). In addition, specific engineering controls were lacking to address the release of the test chemicals into the laboratory workspace. A third and more complex system involved a system of culture vessels connected by plastic tubing. The exposure atmosphere was pumped into each of the individual vessels (Mückter et al., 1998). Unfortunately, volatile organics can readily partition through adsorption and adherence into the plastic tubing used in the construction of such systems. Results of these studies showed significant loss of test chemical from the dosing atmosphere during the exposure period.

Loss of chemical from cell culture media due to volatilization can confound experimental results, especially when trying to compare a number of chemicals having different vapor pressures at ambient and experimental conditions. We recently performed experiments that monitored the change in chemical concentration over time as a test chemical (2,5-dimethyl-[1,3]-dioxane) volatilized from a cell culture plate during exposure (Geiss et al, 1999). That chemical, 2,5-dimethyl-[1,3]-dioxane, had a vapor pressure of 39 mm Hg at 37°C. The half-life ($t_{1/2}$) for the volatilization of that chemical from the plate was

approximately 4.5 h under experimental conditions. In the present study, chemical exposures were performed for 4 h. Given the performance of chemicals such as dioxanes, significant volatilization (e.g. a loss of 50%) would be a concern for chemicals, such as $CCl_4$, which have vapor pressures of > 100 mm Hg at 37°C.

In response to these challenges, we developed a novel system, the VITROBOX™. This system is a rectangular, glass chamber. On one end of the chamber is a removable face plate. The face plate has three holes, roughly evenly spaced and centered. Two of the holes are inlet and outlet ports; the third is a sampling port. Thus we have an isolated system into which vapor of a specific concentration can be maintained. By having a closed system, loss of chemical due to volatilization is inhibited. This system allows for static or flow-through dosing methodologies, with a sample port for monitoring both the headspace and media.

Here, we present the results of our initial experiments using the VITROBOX™ for exposing cultures of primary rat hepatocytes to both a volatile ($CCl_4$) and a non-volatile chemical ($H_2O_2$). We performed assays for cytotoxicity (MTT) and oxidative stress (TBARS and catalase). We have evaluated the efficacy of the chamber by comparing the responses of cells in the chamber to those cultured in a standard incubator. The results here show no difference between the VITROBOX™ and incubator treatments, as indicated by the responses of a standard cellular viability marker (MTT). Further experiments focused solely on $CCl_4$.

## II. MATERIALS AND METHODS

*Chemicals*

Chemicals and biological reagents used in this work were purchased from Sigma Chemical Co. (St. Louis, MO) unless otherwise stated. Chemicals were used as provided by the manufacturer, without further purification. Ketamine (Injectable, U.S.P. grade) was purchased from Parke-Davis (Moris Plains, NJ). Xylazine (Injectable, U.S.P. grade) was purchased from Mobay Corporation (Shawnee, KS). Collagenase (Type D) and Protein Assay ESL reagents were purchased from Roche Biochemicals (Indianapolis, IN). Type I rat tail collagen was purchased from Upstate Biotechnology (Lake Placid, NY). Chee's modified Eagle Medium (Formula No. 88-5046EA) and Hank's balanced salt solution (HBSS) were purchased from GibcoBRL/Life Technologies (Rockville, MD).

*Animals*

Male Fischer 344 rats (225-300 g; Charles River Breeding Laboratories) were anesthetized with 1 mL/kg of a mixture of ketamine (70 mg/mL; Parke-Davis, Moris Plains, NJ) and xylazine (6 mg/mL; Mobay Corp., Shawnee, KS) prior to undergoing the *in situ* liver perfusion.

*Hepatocyte Isolation and Culture*

Rat livers were digested by perfusion using the two-step method of Seglan (1976), with minor modifications, as previously described (DelRaso and Frazier, 1999). In the first perfusion step, the liver was perfused via the hepatic portal vein with perfusion buffer (37°C) consisting of Hank's balanced salt solution (HBSS; pH 7.2) lacking calcium and magnesium and supplemented with 15 mM 4-(2-hydroxyethyl)-1-piperazineethane-sulfonic acid (HEPES), heparin (2.0 U/mL) and ethylene-bis(oxyethylenenitrilo)-tetraacetic acid (EGTA; 0.5 mM). For cell isolation, following complete removal of blood from the liver, digestion buffer (37°C) consisting of complete HBSS (pH 7.2) supplemented with collagenase (0.26 Wunsche Units/mL) was continuously perfused through the liver to digest interstitial connective tissue. Viable primary rat hepatocytes

were washed (37°C) with complete HBSS (pH 7.2) and isolated three times by low speed centrifugation at 50 g for 3 min for enrichment of viable cells. Typical viabilities of isolated hepatocytes ranged from 80 to 95% with yields of 250 to 400 million cells as determined by trypan blue dye exclusion. For cell culture studies, freshly isolated hepatocytes in suspension were adjusted to a cell density of $1.0 \times 10^6$ cell/mL in cell attachment medium consisting of CHEEs modified culture medium (pH 7.2) supplemented with HEPES (10 mM), insulin/transferrin/sodium selenite solution (final concentrations of 5 μg/mL, 5 μg/mL and 5 ng/mL, respectively), gentamycin (0.1 mg/mL), and dexamethasone (0.4 mg/mL). Cells were seeded in 6-well ($1.0 \times 10^6$ cells/well) culture plates. Plates were previously coated with Type I rat tail collagen (25.0 μg/mL stock) at 2.6 $\mu g/cm^2$. After 4 h of incubation in a 95% air/5% $CO_2$ incubator at 37°C, cell attachment medium was removed and rat hepatocytes were incubated in fresh CHEEs culture medium lacking dexamethasone. Hepatocytes were incubated for an additional 20 h in order to recover from the stress incurred during the isolation procedure. Exposures to halogenated chemicals were initiated at this point.

*Chamber Design and Construction - Predecessor design*

The early design of an exposure chamber is shown in Figure 1. The body of the chamber was made out of a Kimble-Kontes thin layer chromatography (TLC) developing tank (Fisher Scientific, Pittsburgh, PA; Cat#K46180-0000). Three holes (3/8" diameter) were drilled into the faceplate with a diamond core drill (Wale Apparatus, Hellertown, PA). Fused glass/stainless steel flexible tubing fixtures (Cat# G321-4-GX-2 by Swagelok; Cajon Vacuum Products, Macedonia, OH) were epoxy sealed (HYSOL epoxy, #EPK-0151, Rudolph Bros. & Co.) into each hole in the face plate, such that one side of the face plate had the full stainless steel extension of each port extended. Faceplate braces, threaded rods, aluminum back plate and wing nuts were taken from surplus parts. This chamber fabrication was performed with assistance from the Instrumentation Laboratory, Miami University.

*The VITROBOX™*

The only similarities with the initial design are the use of the Kimble-Kontes TLC chambers and the three holes in the faceplate. Figure 2 shows the current embodiment

of the VITROBOX™ as it was used in this study. Specially fabricated stainless steel supports were epoxied to the box, front and back, top and bottom (Figure 2). These supports were located for interlocking when chambers were stacked on top of one another (Figure 3). Individual specially fabricated stainless steel braces (3 per face plate) were epoxy sealed onto the outside of the faceplate. They were angled and offset, to prevent interference with the braces of another chamber stacked on top. The faceplate used 1/2" stainless steel bulkhead vacuum fittings (Swagelok) epoxied into each of three holes (9/16"). Quarter-turn paddle-head screws were used to secure the faceplate through the braces into the chamber supports. These chambers were designed and manufactured in conjunction with from the Model Shop of Geo-Centers, Inc. (Pittsburgh, PA).

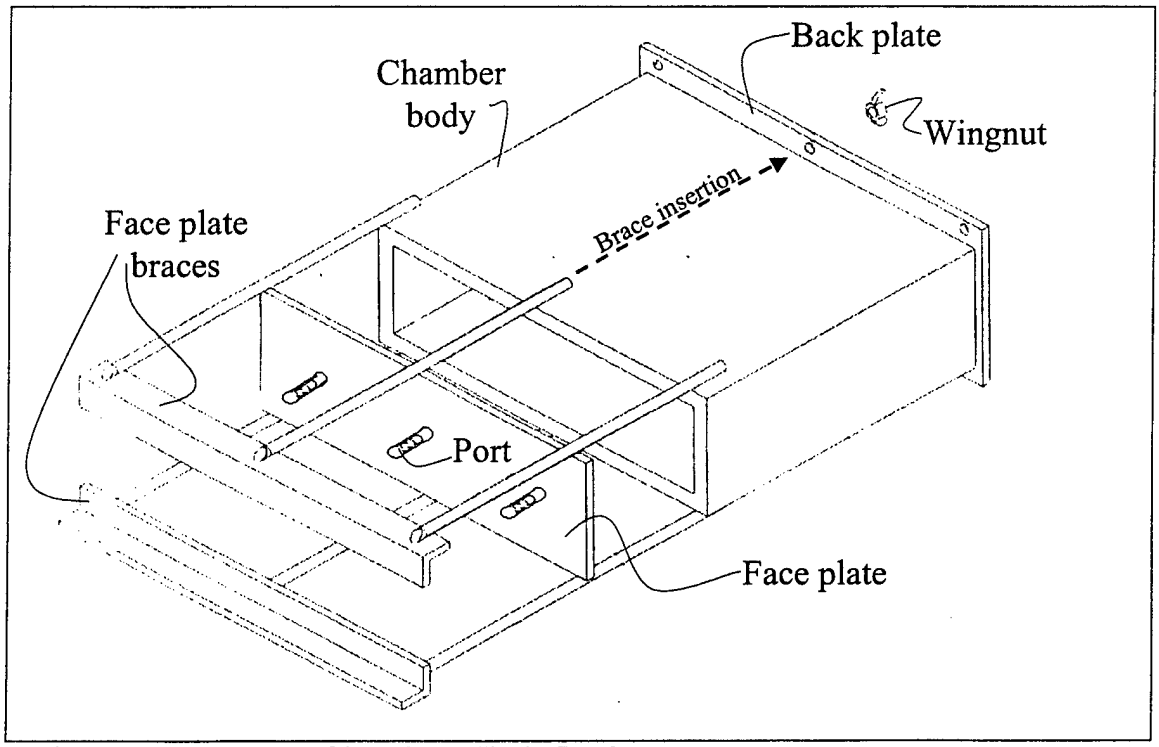


**FIGURE 1. Exposure Chamber - Early Design**

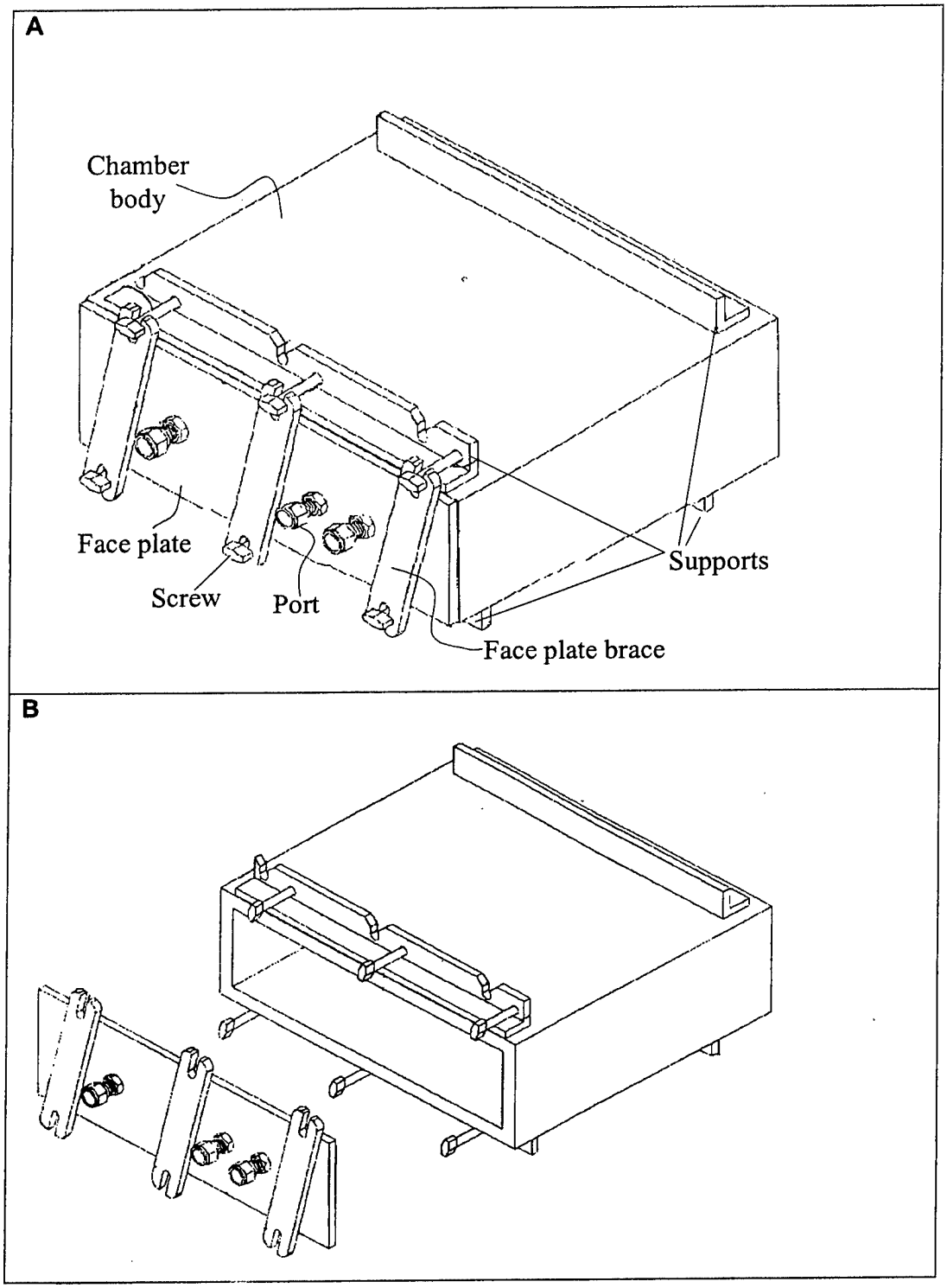


**FIGURE 2. The VITROBOX™.**

Panel A, chamber assembled, major features are identified; Panel B, faceplate removed

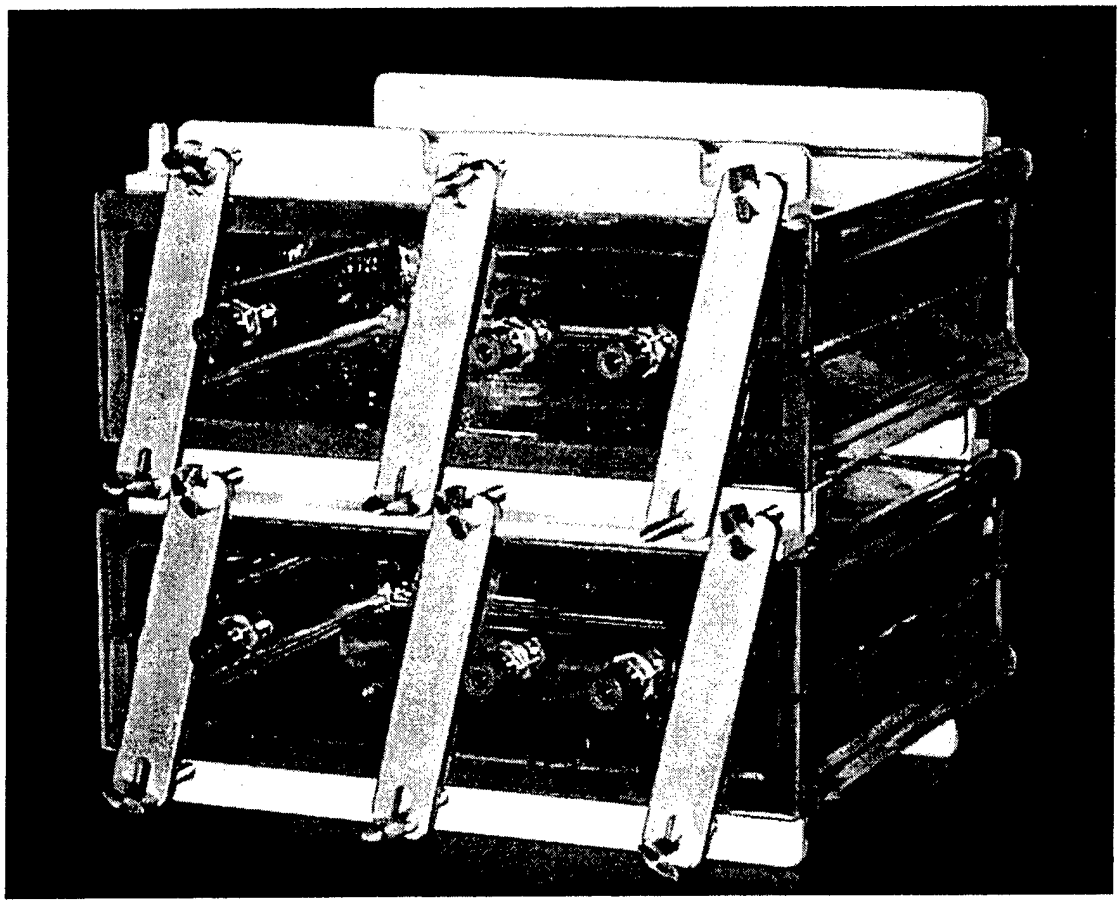

**FIGURE 3. The VITROBOX™ Chambers.**
Shown stacked, as they would be in an incubator

*Chemical Dosing and Use of the VITROBOX™*

On the day prior to volatile chemical exposures, two primary tasks are accomplished. First, VITROBOX™ chambers are placed into a 37°C incubator overnight, to pre-heat them to 37°C. Second 10 L Tedlar (Teflon) bags (one per dose) are loaded with 7.2 L of air, 0.8 L $CO_2$, and 1.5 mL of water. This bag preparation provides a final composition of 95% air/5% $CO_2$ and ~80% relative humidity for the VITROBOX™ following dosing.

One hour before chemical exposures are to take place, the appropriate amount of test chemical was placed into the Tedlar bag and the bag was placed back into the 37°C incubator. Given a 2-fold dilution of the bag chemical concentration when 8 L of the bag is dosed into the VITROBOX™, the amount of chemical (by volume) to be added to the bag was calculated by the following equation:

$$V_{Bag} = \frac{C_{\text{Media}} \times W_{Chem} \times H_{Chem}}{D_{Chem}} \times 8 \times 2 \qquad \text{(Eqn.1)}$$

$V_{Bag}$ = Volume (μL) of chemical to be added to dosing bag

$C_{Media}$ = Desired chemical concentration (mM) in media

$W_{Chem}$ = Molar mass of the chemical (mg/mmol)

$H_{Chem}$ = Henry's Law Constant (air:water partition coefficient) for the chemical at 37°C

$D_{Chem}$ = Density of the chemical

8 = Volume (L) of dosing bag

2 = Dilution factor

Immediately prior to chamber loading, the test chemicals are diluted in Chee's medium. The dosing process is begun by replacing the existing cell culture media with chemical dosing media. One VITROBOX™ is then removed from the incubator. Culture plates are placed into the VITROBOX™ without their culture plate lids. For each chemical exposure concentration, there is a separate VITROBOX™. At this point the VITROBOX™ is closed. Following the schematic presented in Figure 4, the dosing system is prepared.

The chemical dosing bag is attached by flexible tubing to the dosing port on the faceplate of the chamber. Next, tubing connected to the empty capture bag is attached to the chamber faceplate.

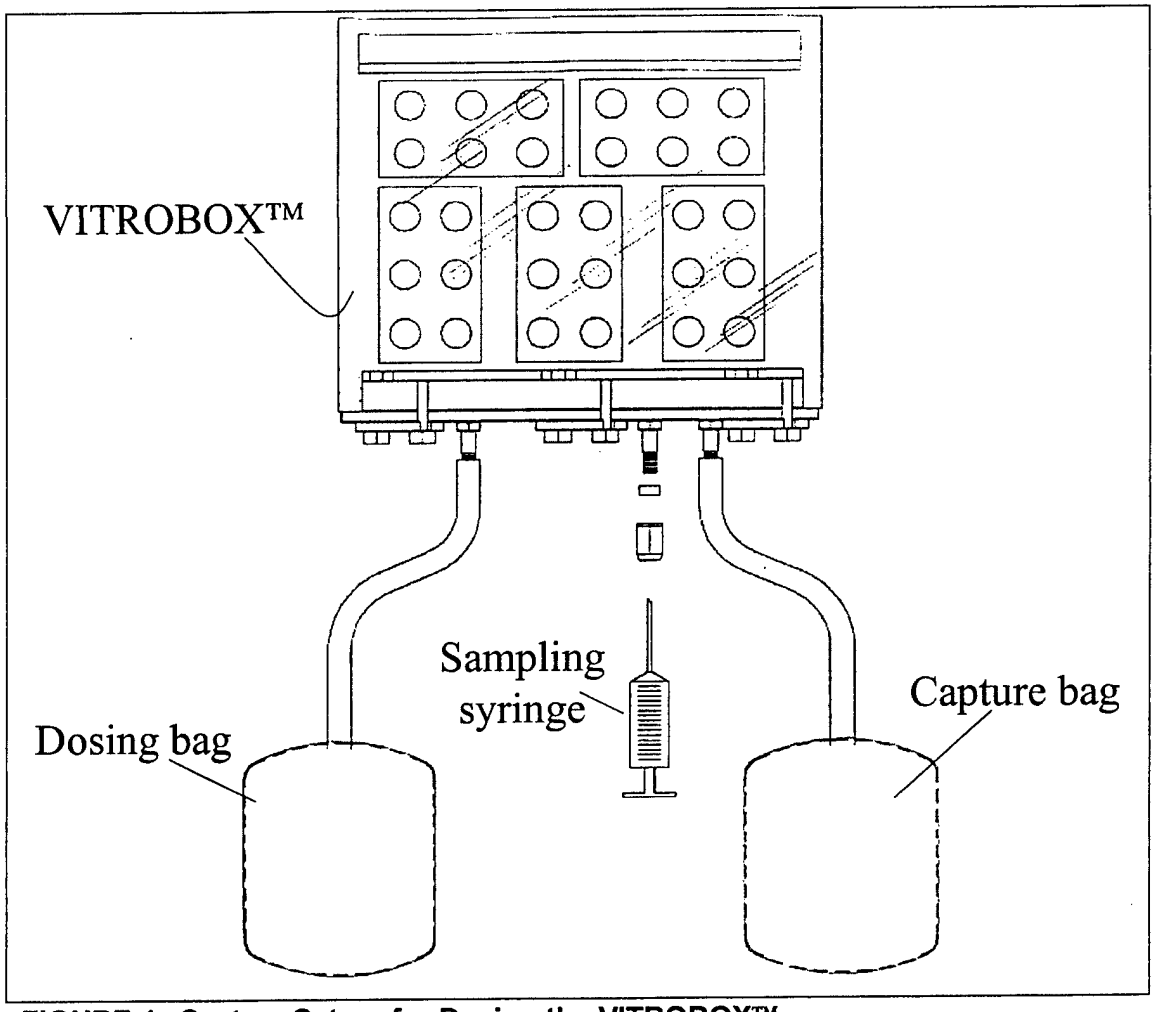


**FIGURE 4. System Set-up for Dosing the VITROBOX™.**

For each dose, a separate Tedlar bag was prepared with the desired chemical concentration. Once the bags are in place, 8 L of the dosing atmosphere is infused into the chamber by applying manual pressure to the dosing bag. Following atmosphere infusion, the bags are detached from each port and the ports are sealed with fittings containing Teflon septa. The use of standard vacuum fittings on the faceplate allows the user to attach additional instruments or equipment to the VITROBOX™. For example, a flow-through dosing protocol could be employed, instead of the static dosing put forth in this study. If desired, the headspace can be sampled for gas chromatographic analysis by using a gas-tight syringe.

For all experiments, the cells were exposed to the chemicals for four hours, then removed from the chambers and prepared for analysis. The design of the VITROBOX™ allows up to four chambers to be stacked in a standard-sized laboratory cell culture incubator. Since the chambers are small enough, they are placed into a chemical fume hood when the faceplates are removed at the end of the experiment, to access the cell culture plates. This arrangement helps to prevent the exposure of laboratory personnel to toxic chemicals.

Each VITROBOX™ chamber is designed such that it can hold up to 5 standard-sized microwell plates (i.e. 6-, 24-, 48- or 96-well format). As an alternative, flat-bottomed culture flasks, petri dishes, chambered microscope slides, or any of a variety of other vessels can be used (See Figure 5).

*MTT Cytotoxicity Assay*

Cell viability in plated primary rat hepatocyte cultures was determined spectrophotometrically by measuring the degree of mitochondrial reduction of the tetrazolium salt 3-(4,5-dimethylthiazol-2-yl)-2,5-diphenyltetrazolium bromide (MTT) to MTT formazan as initially described by Mossman (1983). This colorimetric assay was performed as follows. At the conclusion of cell culture exposures to the test chemicals media was aspirated from the wells. A 1 mL aliquot of the MTT working solution (0.5 mg MTT/mL culture medium) was added to each well and plates were incubated for 20 min at 37°C in a standard incubator. The MTT working solution was removed by aspiration and 1 mL acidified isopropanol (60% isoproponal/40% 0.N HCl) solution was added to each well. The plates were then shaken for 15 min using a vortex shaker with a culture plate platform attachment to obtain homogeneous extraction. A 200 μL aliquot of MTT extract from each well was added to another 96-well culture plate.

Optical density of samples was measured spectrophotometrically in samples on a microplate reader (SPECTRAmax190, Molecular Devices, Sunnyvale, CA, USA) at 570 nm and corrected for the absorbance at 630 nm. MTT dye reduction was computed as a percent of that present in the control cultures incubated under identical conditions, but without added test chemicals.

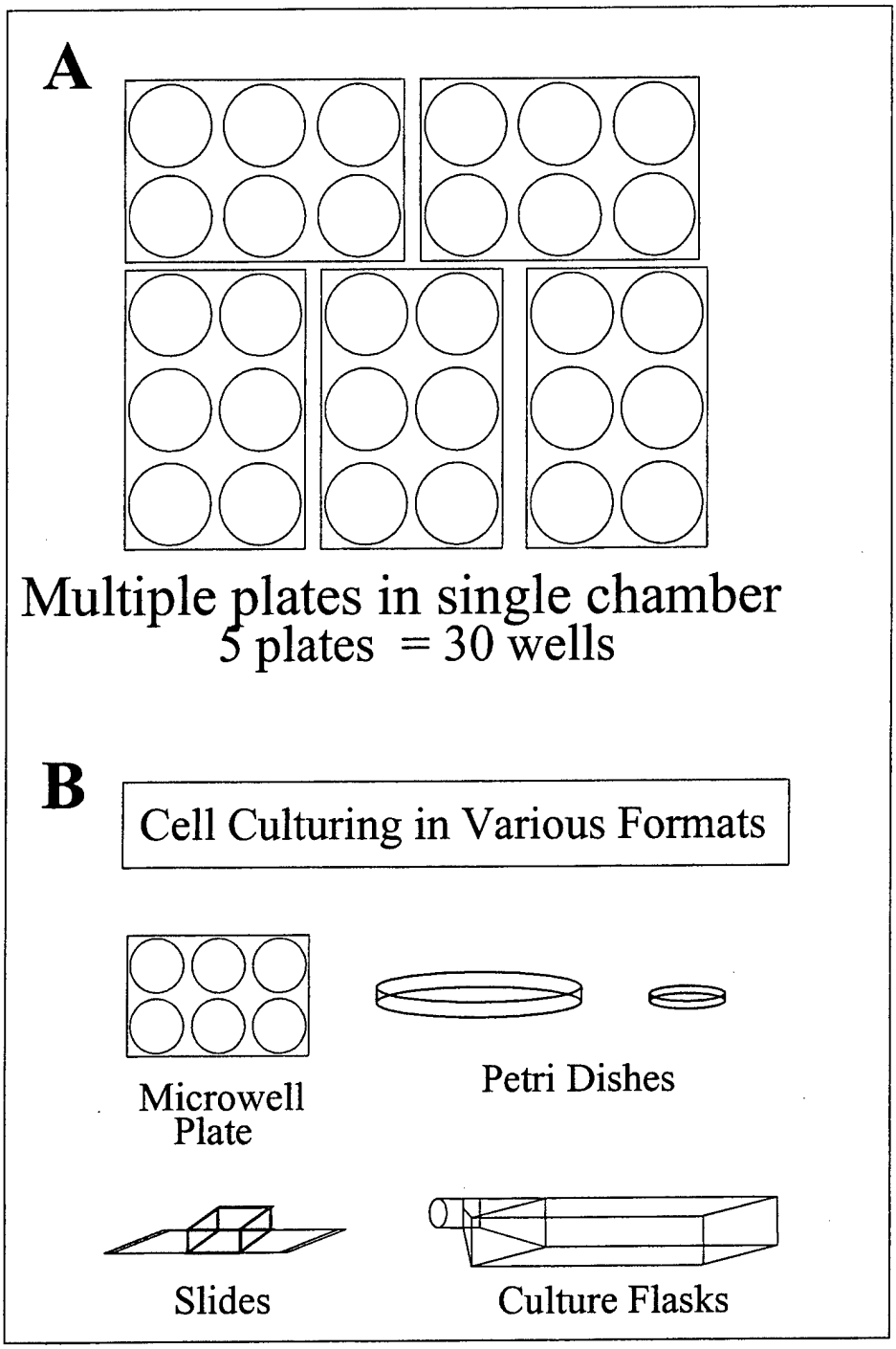


**FIGURE 5. Example of Culturing Formats in the VITROBOX™.**

Panel A, the layout of 5 cell culture plates (6-well format) as they would be in the VITROBOX™

Panel B, Examples of culturing vessels that may be employed in the VITROBOX™

*Lipid Peroxidation: Thiobarbituric Acid Reactive Species (TBARS) Assay*

Lipid peroxidation in primary hepatocytes was assayed by measuring the thiobarbituric acid (TBA) reactive species (TBARS). This assay is based on adduct formation between TBA and malondialdehyde (MDA) equivalents (Yokoyama et al., 1995). At the time of sampling, a 1 mL aliquot of cell culture medium was placed into a 12 x 125 mm glass test tube and kept on ice until assayed. One mL of TBA reagent (29 mM TBA in 8.75 mM acetic acid) was added to each test tube containing either 1 mL of media sample (including a media blank) or 1 mL of 1,1,3,3-tetramethoxypropane (TMP) standard (concentration range of 1 μM to 3 mM). Standard TMP solutions were derived from serial dilutions of a 30 mM stock solution into fresh cell culture medium. All tubes were covered with lids and then incubated in boiling (95-100°C) water for 10 min. Following incubation, samples were removed from the water bath and allowed to cool for 10 min. Once cooled, 50 μL of 2.5 N HCl and then 1 mL *n*-butanol were added to each test tube. Test tubes were then vortexed twice for 3 seconds and were centrifuged for 10 min at 1500 g in a swinging-bucket centrifuge for phase separation. The amount of TBAR products were determined by pipetting 200 μL of the top butanol layer into the well of a 96-well cell culture plate and measuring the fluorescence with a spectrophotometric fluorescent microplate reader (GeminiXS, Molecular Devices Corp., Sunnyvale, CA). Samples and standards were read at an excitation wavelength of 529 nm and an emission wavelength of 555 nm. Sample concentrations were determined based on a log-linear standard curve computed from the TMP standards using the plate reader software (SoftMax v.3.0, Molecular Devices Corp., Sunnyvale, CA). Data were expressed as μmol MDA equivalents/mL of culture medium.

*Catalase Enzyme Activity*

Catalase is a primary enzyme in the antioxidant system of the cell, defending against oxidative stress by decomposing hydrogen peroxide ($H_2O_2$). Catalase enzyme activity was assayed here following the method of Aebi (1984) as modified for a microplate reader format. The disappearance of $H_2O_2$ in the presence of cell lysate was measured at 240 nm. Triton X-100 cell suspensions were stored on ice until the catalase assay was performed.

A 10 μL aliquot of each cell suspension was added to a well of a quartz microplate (Molecular Devices, Sunnyvale, CA). Immediately preceding measurement, 200 μL of reaction mixture (10mM $H_2O_2$ in 0.05 mM potassium phosphate buffer, pH 7.0) was added to the sample wells. This concentration of $H_2O_2$ will saturate catalase activity. Absorbance at 240 nm was measured in the kinetic mode for 2 min at 10 sec intervals on a UV spectrophotometric microplate reader (SpectraMax190, Molecular Devices, Sunnyvale, CA). The Vmax for the disappearance of $H_2O_2$ was calculated and data presented as units of catalase enzyme activity.

*Analytical Chemistry Methods*

The VITROBOX™ headspace and aqueous medium solutions of the $CCl_4$ exposure were analyzed by gas chromatography (GC) with mass spectrometry detection (MSD). Headspace and medium samples (1 μL) were injected manually into a 0.25 mm X 30 m SPB-1 column, with 0.25μm film thickness (Supelco, Bellefont, PA) in a Hewlett-Packard (HP, Palo Alto, CA) Series II 5890 gas chromatograph (GC) with a 5971 Series MSD. Initial pressure was 7.3 psi and carrier gas flow was 1 mL/min helium. Make-up gas flow was 23 mL/min helium. Prior to analysis, the autotune program was run for the MSD. The injector and detector temperatures were 220°C and 250°C, respectively. For the headspace analysis, the oven program was set at 180°C, isothermal for 11 min, with an initial solvent delay of 1 min. For the aqueous solution analysis, the oven program had an initial temperature of 35°C with a solvent delay of 7.5 min, then increase to 55°C at a rate of 4°C/min, then ramp to a final temperature of 250°C at a rate of 70°C/min and hold for 2 min. Sample concentrations were determined by measurement of peak areas, then calculated based on the standard curve results using the HP ChemStation software.

## III. RESULTS AND DISCUSSION

*The VITROBOX™*

The development of this box allows for the exposure of multiple culture vessels to the same dosing conditions. The construction of the box is appropriate for the utilization of different types of cell culturing vessels (Figures 2 and 5). Since the VITROBOX™ is of an appropriate size, multiple units can be stacked in a standard size incubator (Figure 3). The dosing atmosphere and media may be sampled while the cultures are sealed in the VITROBOX™ (Figure 4).

*Headspace Chemical Analysis and Leak Performance*

GC/MS analytical methods were developed and verified. Figure 6 shows the chromatogram and peak mass spectrum achieved during headspace analysis of a sample taken from a VITROBOX™ containing $CCl_4$. Figure 6 also shows the confirmation (by instrument library search) of the $CCl_4$ peak. Figure 7 shows the results of monitoring the VITROBOX™ headspace concentration following an initial 100 ppm dosing with $CCl_4$. The concentration was followed over 16 h. At the conclusion, < 10% of the chemical had disappeared from the headspace. There was no detected difference after 4 h, which is the standard period of exposure for the present cell culture studies.

A

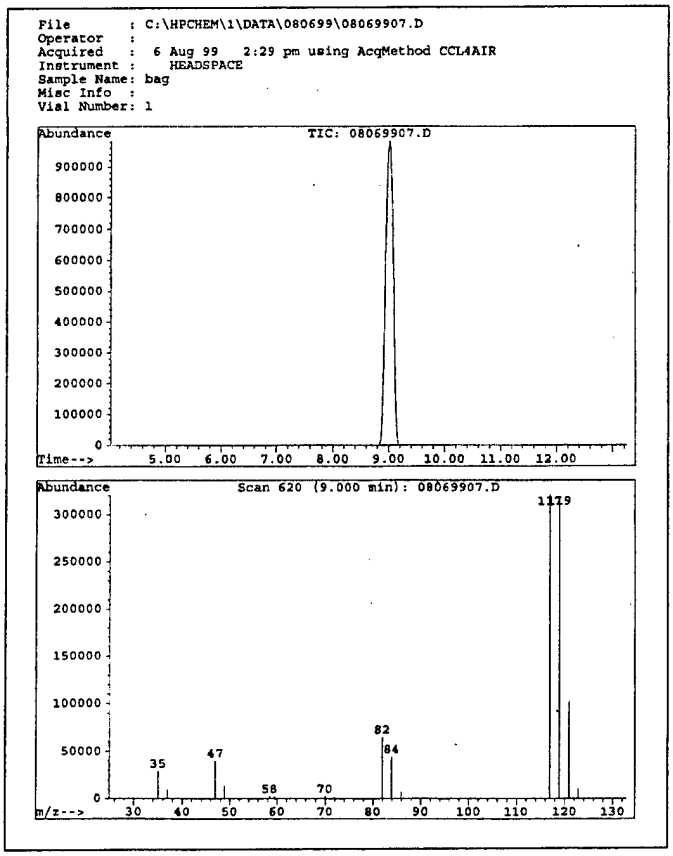


B

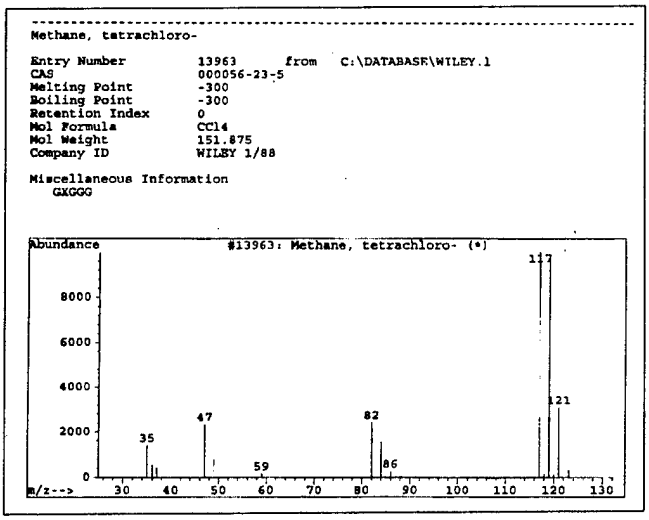


**FIGURE 6. GC/MS Analysis of $CCl_4$ from VITROBOX™ Headspace.**

Panel A, peak identification; Panel B, library identification of $CCl_4$ peak

*Evaluation of VITROBOX™ Effects with or without Chemical Dosing*

First, cells were placed either in the VITROBOX™ in an incubator, or simply placed in an incubator under standard conditions. The effect on MTT reduction from these treatments was assessed. As evidenced by the MTT results, there is no effect on the cells cultured in the VITROBOX™ as compared to cells cultured in a standard incubator (Figure 8). The next concern was whether conditions in the VITROBOX™ would affect the response after exposure to a chemical. Figure 9 shows that the response for the hepatocytes cultured in the VITROBOX™ paralleled that of the cells cultured in a standard incubator. We then exposed the cells to $CCl_4$ and evaluated other endpoints (TBARS and catalase). Figure 10 shows that hepatocytes exposed to $CCl_4$ resulted in a dose-related increase in the production of TBARS products. Cell culture exposures in the VITROBOX™ also produced a dose-related decrease in catalase activity (Figure 11).

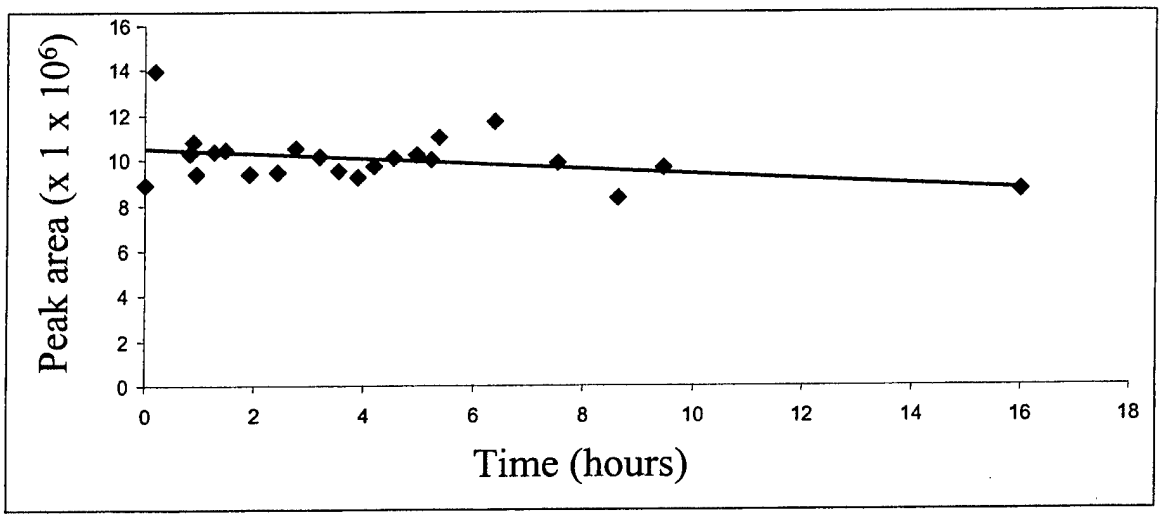


**FIGURE 7. Headspace Concentration of $CCl_4$ over 16 h Incubation.**

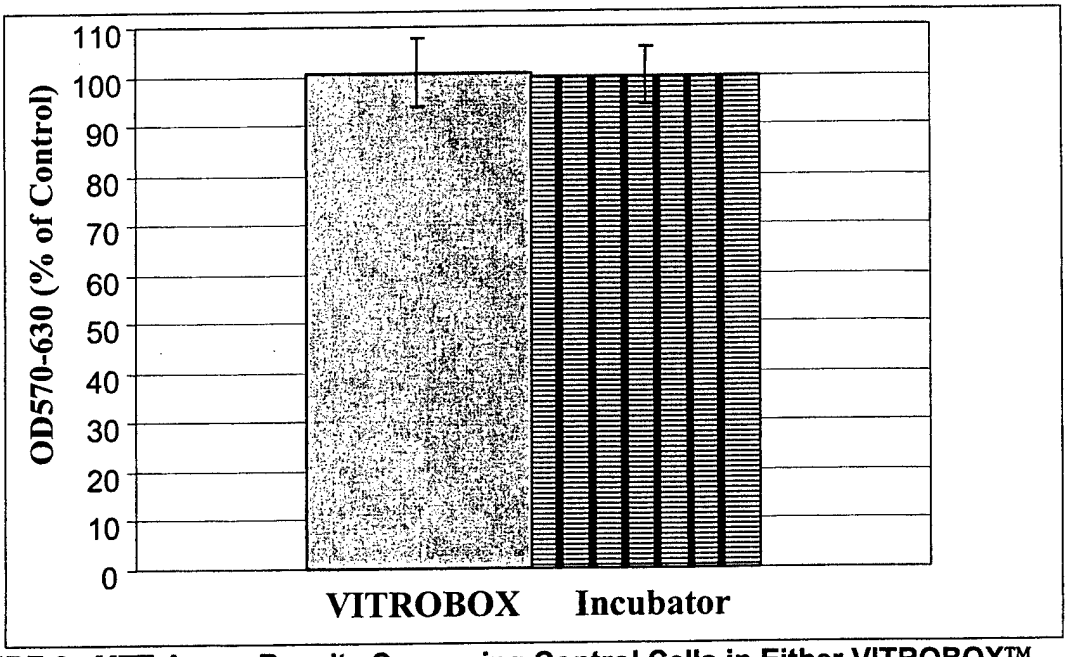


**FIGURE 8. MTT Assay Results Comparing Control Cells in Either VITROBOX™ or Standard Cell Culture Incubator for 4 h.**

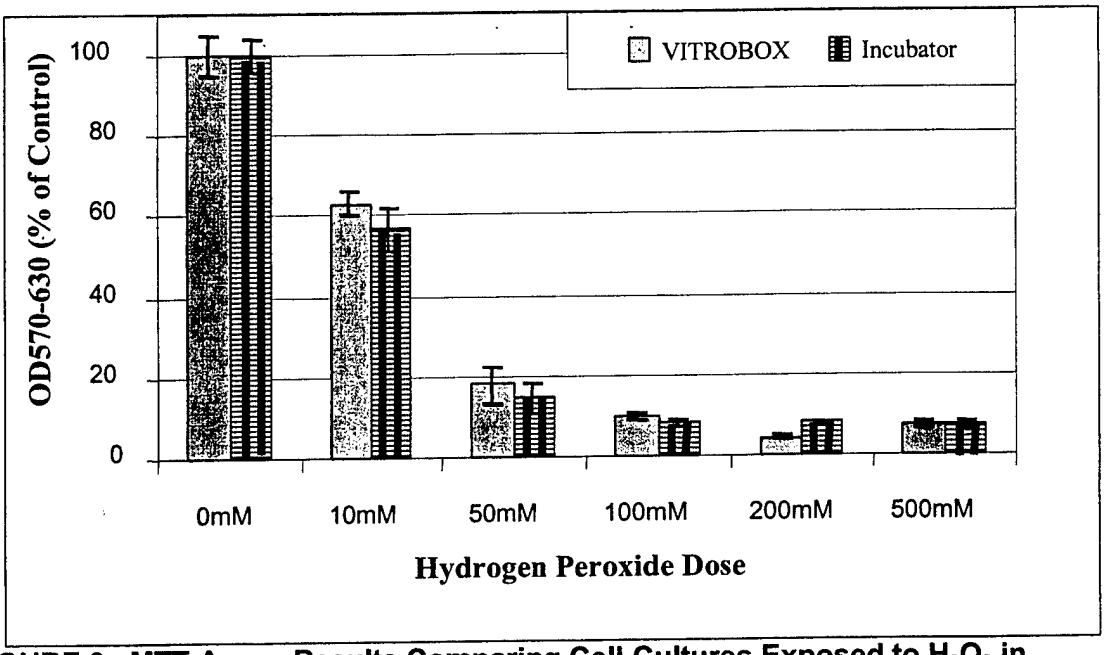


**FIGURE 9. MTT Assay Results Comparing Cell Cultures Exposed to $H_2O_2$ in Either the VITROBOX™ or Standard Incubator for 4 h.**

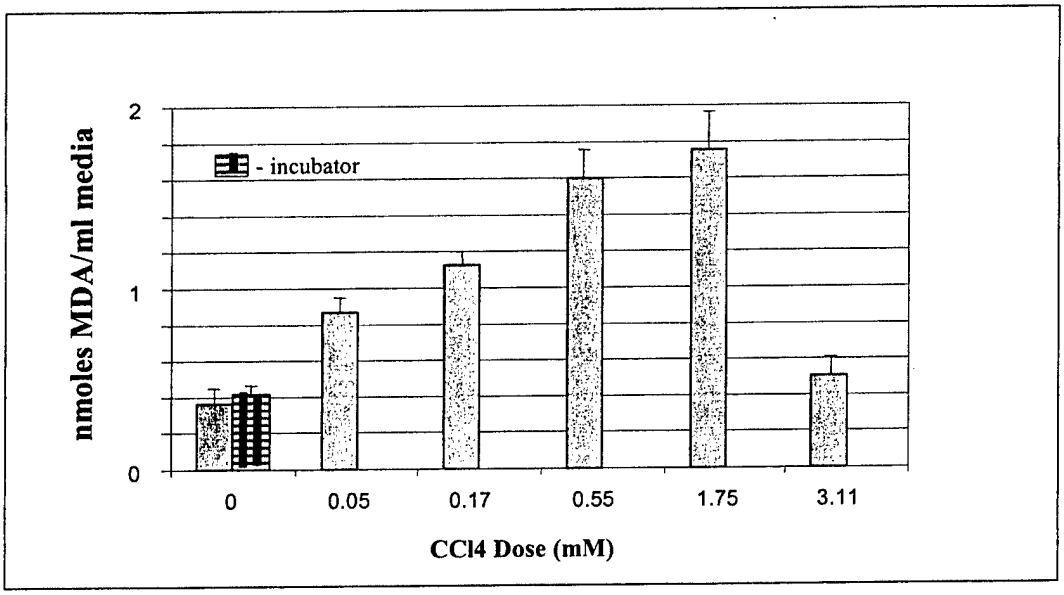


**FIGURE 10. TBARS Assay Results for Cell Cultures Exposed to $CCl_4$ in the VITROBOX™ for 4 h.** Incubator Control Shown for Comparison.

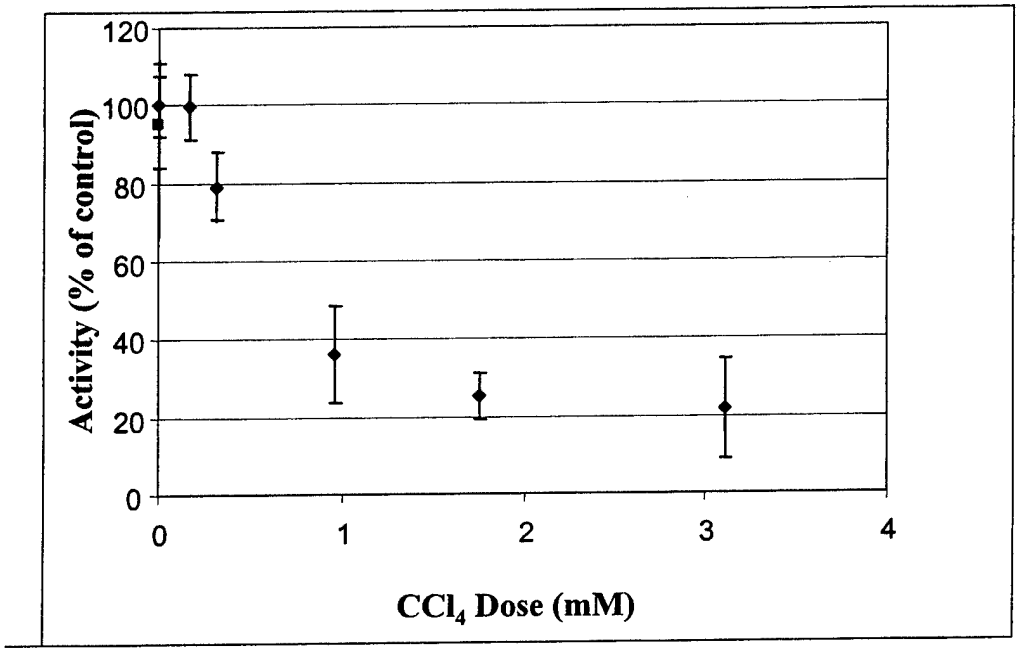


**FIGURE 11. Catalase Enzyme Activity Results for Cell Cultures Exposed to $CCl_4$ in the VITROBOX™ for 4 h.**

## IV. CONCLUSIONS

- The VITROBOX™ is an effective system for *in vitro* exposures using volatile chemicals
- Viability of hepatocytes as measured by MTT assay was sustained after 4 h while cultured in the VITROBOX™ as compared to the normal incubator
- Identical dose-response curves were obtained for cells exposed to $H_2O_2$ (a low-volatility chemical) and cultured in either the VITROBOX™ or a standard incubator. This indicated the basic suitability of the exposure system to culture cells, whether using volatile chemicals or not
- Dose-response curves were obtained for multiple endpoints following exposures to $CCl_4$ performed in the VITROBOX™

## ACKNOWLEDGEMENTS

Thanks to Michelle Curran for superior technical assistance. Thanks to Gerri Miller, Nick DelRaso, Saber Hussain, Dan Pollard, and David Tsui for scientific and technical support of the experimental studies. Special thanks to Mark Gaydos and Bob Shallenberger of Geo Centers, Inc. (Figures 2-5 are credited to them). Use of VITROBOX™ technology is covered by US Patent No. 6,593,136 (July 2003) assigned to Geo-Centers, Inc (Newton, MA).

## V. REFERENCES


Aebi, H. 1984. Catalase in vitro. *Meth Enzymol* **105**: 121-127.

DelRaso, N. and J. Frazier. 1999. Effect of zinc and albumin pretreatment on cadmium uptake in rat hepatocytes exposed under physiological conditions. *Toxicologist* **48**(1-S): 356.

DelRaso, N. and S. Channel. 1999. Novel in vitro method for rapid screening of volatile compounds using primary or immortalized rat hepatocytes. *Toxicol Meth* **9**: 137-152.

Geiss, K., D. Pollard, and J. Frazier. 1999. Toxicity of experimental jet fuel system ice-inhibiting agents: I. In Vitro Dosimetry. Air Force Technical Report AFRL/HE-WP-TR-1999-0247.

Mossmann, T. 1983. Rapid colorimetric assay for cellular growth and survival: application to proliferation and cytotoxicity assay *J Immunol Meth* **6**:55-63.

Mückter, H., M. Zwing, S. Bäder, T. Marx, E. Doklea, B. Liebl, B. Fichtl, and M. Georgieff. 1998. A novel apparatus for the exposure of cultured cells to volatile agents. Journal of Pharmacological and *Toxicol Meth* **40**: 63-69.

Seglen, P. 1976. Preparation of isolated rat liver cells. In: *Methods in Cell Biology*, Prescott, D. M (Ed.), New York: Academic Press, p. 29-83.

Steel-Goodwin, L., T. Pravacek, B. Hancock, W. Schmidt, S. Trivunovic, G. Miller, C. Bishop, D. Bartholemew, S. Channel, M. Ketcha, and A. Carmichael. 1996. Trichloroethylene: Free radical studies in B6C3F1 mouse liver slices. Air Force Technical Report AL/OE-TR-1996-0079.

Suzuki, T., K. Nezu, H. Sasaki, T. Miyazawa, and H. Isong. 1994. Cytotoxicity of chlorinated hydrocarbons and lipid peroxidation in isolated rat hepatocytes. *Biol Pharm Bull* **17**: 82-86.

Thomas, D., F. van Kuijk, and R. Stephens. 1992. Quantitative determination of hydroxy fatty acids as an indicator of in vivo lipid peroxidation: oxidation products of arachidonic and docosapentaenoic acids in rat liver after exposure to carbon tetrachloride. *Anal Biochem* **206**: 353-358.

Yokoyama, H., T. Horie, and S. Awazu. 1995. Oxidative stress in isolated rat hepatocytes during naproxen metabolism. *Biochem Pharmacol* **49**(7): 991-996.