Unexploded Ordnance (UXO): An Overview

October 1996

Report Documentation Page

Form Approved
OMB No. 0704-0188

Public reporting burden for the collection of information is estimated to average 1 hour per response, including the time for reviewing instructions, searching existing data sources, gathering and maintaining the data needed, and completing and reviewing the collection of information. Send comments regarding this burden estimate or any other aspect of this collection of information, including suggestions for reducing this burden, to Washington Headquarters Services, Directorate for Information Operations and Reports, 1215 Jefferson Davis Highway, Suite 1204, Arlington VA 22202-4302. Respondents should be aware that notwithstanding any other provision of law, no person shall be subject to a penalty for failing to comply with a collection of information if it does not display a currently valid OMB control number.

1. REPORT DATE	2. REPORT TYPE	3. DATES COVERED
OCT 1996	**N/A**	**-**

4. TITLE AND SUBTITLE **Unexploded Ordnance (UXO): An Overview**	5a. CONTRACT NUMBER
	5b. GRANT NUMBER
	5c. PROGRAM ELEMENT NUMBER
6. AUTHOR(S)	5d. PROJECT NUMBER
	5e. TASK NUMBER
	5f. WORK UNIT NUMBER
7. PERFORMING ORGANIZATION NAME(S) AND ADDRESS(ES) **US Army Environmental Center SFIM-AEC-PC 5179 Hoadley Road Aberdeen Proving Ground, MD 21010-5401**	8. PERFORMING ORGANIZATION REPORT NUMBER
9. SPONSORING/MONITORING AGENCY NAME(S) AND ADDRESS(ES)	10. SPONSOR/MONITOR'S ACRONYM(S)
	11. SPONSOR/MONITOR'S REPORT NUMBER(S)

12. DISTRIBUTION/AVAILABILITY STATEMENT
Approved for public release, distribution unlimited

13. SUPPLEMENTARY NOTES
The original document contains color images.

14. ABSTRACT

15. SUBJECT TERMS

16. SECURITY CLASSIFICATION OF:			17. LIMITATION OF ABSTRACT	18. NUMBER OF PAGES	19a. NAME OF RESPONSIBLE PERSON
a. REPORT	b. ABSTRACT	c. THIS PAGE			
unclassified	**unclassified**	**unclassified**	**UU**	**22**	

Standard Form 298 (Rev. 8-98)
Prescribed by ANSI Std Z39-18

CONTENTS

Section Title		Page
FOREWORD		ii
1.0	INTRODUCTION	1
2.0	OVERVIEW OF UXO	1
2.1	Types of UXO	1
2.2	Encountering UXO	4
3.0	UXO SAFETY AND REPORTING PROCEDURES	4
3.1	Safety Procedures	4
3.2	Reporting Procedures	5
4.0	UXO RISKS AND RISK ASSESSMENTS	5
4.1	Risk Factors	5
4.2	Risk Assessment Initiatives	6
5.0	UXO MANAGEMENT, CHARACTERIZATION, AND REMEDIATION	6
5.1	Management Options	6
5.2	Remediation Options	7
5.3	Characterization Technologies	7
5.4	Excavation Technologies	9
6.0	DECISION-MAKING FACTORS	9
REFERENCES		11
Appendices		
Appendix A	Glossary of UXO Terminology	A-1
Appendix B	Format for Reporting Unexploded Ordnance	B-1

FOREWORD

This document has been prepared for the Federal Advisory Committee for the Development of Innovative Technologies in cooperation with:

Department of Defense Explosives Safety Board
Naval Explosive Ordnance Disposal Technology Division
U.S. Army Environmental Center
Bureau of Land Management
PRC Environmental Management, Inc.

The Federal Advisory Committee for the Development of Innovative Technologies is comprised of representatives from the Western Governors' Association, Department of Defense, Environmental Protection Agency, and Department of Interior.

1.0 INTRODUCTION

Millions of acres of property in the United States contain unexploded ordnance (UXO), most of which is a result of weapons system testing and troop training activities conducted by the Department of Defense (DoD). This property includes active military, formerly used defense (FUD), and base realignment and closure (BRAC) sites. The risks posed by property containing UXO could be great depending on the types and amount of UXO present and how the property is or may be used.

Those who use and manage property with UXO, as well as those responsible for making decisions regarding the property, need information on the risks presented by UXO, options for eliminating or reducing the risks, and factors to be considered in the decision-making process. This document summarizes the characteristics of UXO, safety procedures to be used on property that contains UXO, UXO risks and risk assessments, options and technologies for reducing the risks, and factors that should be considered in the decision-making process. Points of contact and references are listed for additional information on UXO, risks, and remediation, and a glossary of terminology used in this document is provided as Appendix A.

2.0 OVERVIEW OF UXO

DoD defines “explosive ordnance” as any munition, weapon delivery system, or ordnance item that contains explosives, propellants, and chemical agents. UXO consists of these same items after they (1) are armed or otherwise prepared for action, (2) are launched, placed, fired, or released in a way that they cause hazards, and (3) remain unexploded either through malfunction or design.

A person's ability to recognize a UXO is the first and most important step in reducing the risk posed by a UXO hazard. This section presents information on the most common types of UXO and how it may be found in the field.

2.1 Types of UXO

In the past century, all shapes, sizes, and types of explosive ordnance have been used in the U.S. for weapons system testing and troop training activities. The following types of UXO are those most likely to be encountered on active DoD sites and FUD and BRAC sites:

- Small arms munitions
- Hand grenades
- Rockets
- Guided missiles
- Projectiles
- Mortars
- Projected grenades
- Rifle grenades
- Submunitions
- Bombs

Ordnance is color-coded during manufacturing for identification purposes. However, color markings cannot be relied upon to identify UXO — markings can be altered or removed by weather or exposure to the environment. Instead, other features should be used to identify UXO. The following sections describe the basic features and characteristics associated with each general type of UXO. Additional information can be found in *Unexploded Ordnance (UXO) Procedures* (U.S. Army 1994).

Small Arms Munitions

Small arms munitions contain projectiles that are 0.5 inches or less in caliber and no longer than approximately 4 inches. They are fired from various sizes of weapons, such as pistols, carbines, rifles, automatic rifles, shotguns, and machine guns. Generally, the shell casings of small arms munitions are made from brass or steel. Although the hazards associated with these UXO are much less than for other munitions, unexploded small arms munitions may explode if thrown into a fire or struck with a sharp object such as a nail. Figure 1 illustrates various small arms munitions.

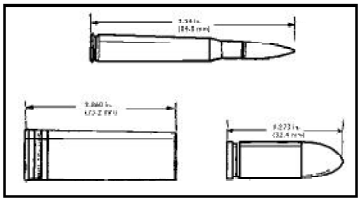

Figure 1. Small Arms Munitions.

Hand Grenades

Hand grenades are small explosive- or chemical-type munitions that are designed to be thrown at short range. Various classes of grenades may be encountered as UXO,

including fragmentation, smoke, and illumination grenades. All grenades have three main parts: a body, a fuze with a pull ring and safety clip assembly, and a filler. Figure 2 shows typical grenades.

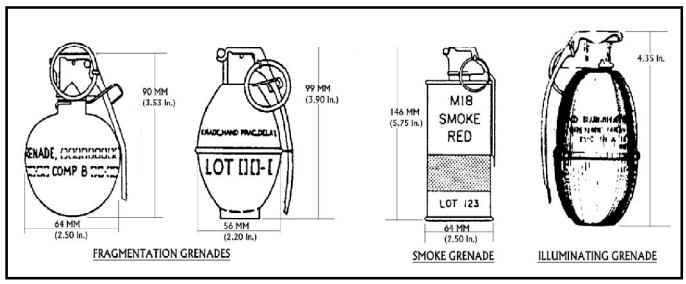

Figure 2. Typical Grenades.

Fragmentation grenades are the most common type of grenade used. They have a metal or plastic body filled with an explosive material. When the filler explodes, the body of the grenade or a metal fragmentation sleeve breaks into small, lethal, high velocity fragments. These grenades use a burning delay fuze that functions 3 to 5 seconds after the safety lever is released.

Other grenades may be made of metal, plastic, cardboard, or rubber and may contain explosives, white phosphorus, chemical agents, or illumination flares, depending on their intended use. Most use a burning delay fuze that functions 3 to 5 seconds after the safety lever is released, but some are activated instantly when the lever is released (smoke grenades).

Rockets

A rocket uses gas pressure from rapidly burning material (propellant) to transport a payload (warhead) to a desired location. Rockets can range from 1 1/2 to more than 15 inches in diameter, and they can vary from 1 foot to over 9 feet in length. All rockets consist of a warhead section, a motor section, and a fuze. They are unguided after launch and are stabilized during flight by canted nozzles at the base of the motor or fins attached to the motor. Figure 3 shows the typical components of a rocket.

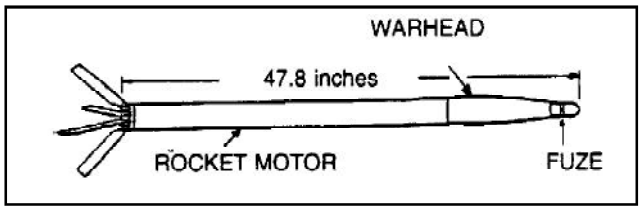

Figure 3. Parts of a Rocket.

The warhead section of the rocket is the portion that produces the intended effect; it can be filled with explosives, toxic chemicals, white phosphorus, submunitions, riot-control agent, or illumination flares. Fuzes may be located in the nose of the rocket or internally between the warhead and motor. The fuzing on rockets can be impact, time-delay, or proximity fuzing. Impact fuzes function when they hit the target. Delay fuzes contain an element that delays explosion for a fixed time after impact. Proximity fuzes are intended to function when the rockets reach a predetermined distance from the target. *Caution: Do not approach—proximity fuzing may activate, causing the rocket warhead to explode. Also, fired rockets may still contain residual propellant that could ignite and burn violently.*

Guided Missiles

Guided missiles are similar to rockets (see Figure 4); however, they are guided to their target by various systems. Some are wired-guided, and others are guided by internal or external radar or video. Guided missles are usually stabilized by fins controlled by internal electronics. Internal proximity fuzes are used in guided missles, which makes approaching them extremely dangerous. Also, fired guided missles may still contain residual propellant that could ignite and burn violently.

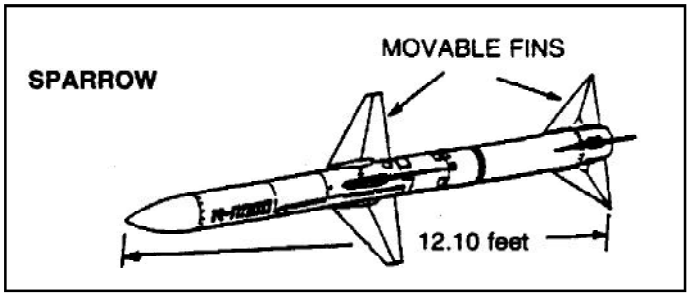

Figure 4. Guided Missile.

Projectiles

Projectiles can range from approximately1 inch to 16 inches in diameter and from 2 inches to 4 feet in length. Projectile fuzes can be located in the nose or in the base, as shown in Figure 5. Like rockets, projectiles may be stabilized during flight by fins or bands fixed around the circumference of the projectile.

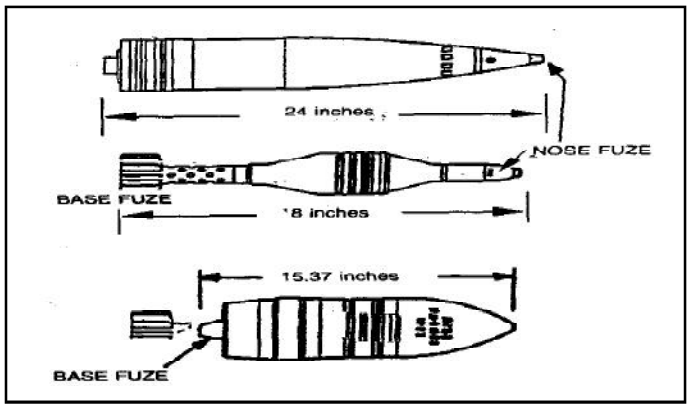

Figure 5. Typical Projectiles.

Mortars

Mortars range from approximately 1 inch to 11 inches in diameter and can be filled with explosives, toxic chemicals, white phosphorus, or illumination flares. Mortars generally have thinner metal casing than projectiles, but use the same types of fuzing and stabilization. Figure 6 shows various types of mortars.

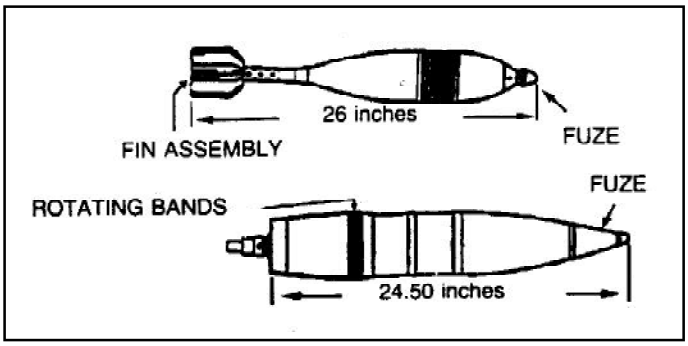

Figure 6. Typical Mortars.

Projected Grenades

The most commonly used projected grenade is the 40 millimeter (40mm) grenade. This grenade is also among the most commonly found UXO items. The 40mm grenade is about the same size and shape as a chicken egg, as shown in Figure 7. It contains high explosives and uses a variety of fuzes, including some of the most sensitive internal impact fuzing systems. Because of their relatively small size, 40mm grenades are easily concealed by vegetation. They are extremely dangerous and can explode if moved or handled.

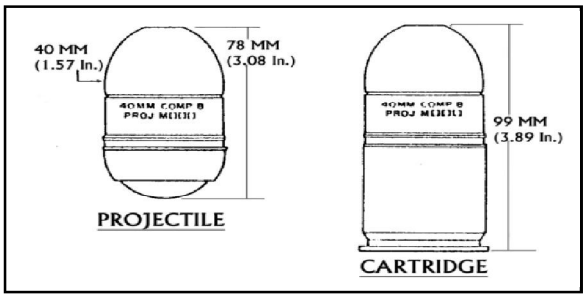

Figure 7. 40mm Grenades.

Rifle Grenades

Rifle grenades look like mortars and range from about 9 to 17 inches in length. They may be filled with high explosives, white phosphorus, riot-control agent, illumination flares, or chemicals that produce colored screening smoke. Rifle grenades are fired from standard infantry rifles. They have an opening at the far end of a tube near the fin assembly that allows the rifle grenade to be placed on the barrel of a rifle. Rifle grenades rely on impact fuzing, which is located on the nose or internally behind the warhead. Figure 8 shows various types of rifle grenades.

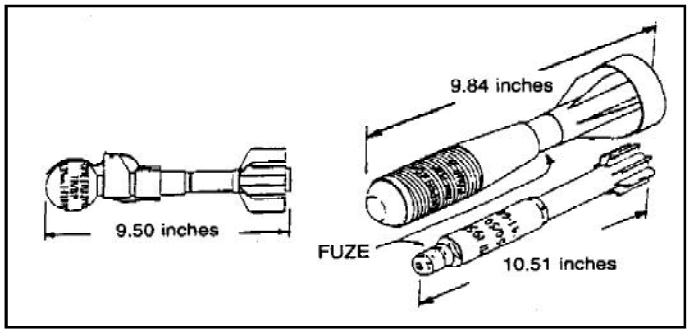

Figure 8. Rifle Grenades.

Submunitions

Submunitions include bomblets, grenades, and mines filled with explosives or chemical agents. They may be antipersonnel, antimateriel, antitank, dual-purpose, incendiary, or chemical submunitions. Submunitions are typically spread over a large area by dispensers, missiles, rockets, or projectiles. Each of these delivery systems disperses the submunitions while still in flight, scattering the submunitions over an area.

Submunitions are activated in a variety of ways, depending on their intended use. Some are activated by pressure, impact, or movement or disturbance. Others are activated in flight or when they come near metallic objects. Some submunitions contain a self-destruct fuze as a backup. The self-destruct time can vary from a couple of hours to several days. *Warning: Submunitions are extremely hazardous because even very slight disturbances can cause them to explode.*

Some types of submunitions require stabilization to hit the target straight on. Stabilization can be provided through an arming ribbon, parachute, or fin assembly. Figure 9 shows a variety of submunitions.

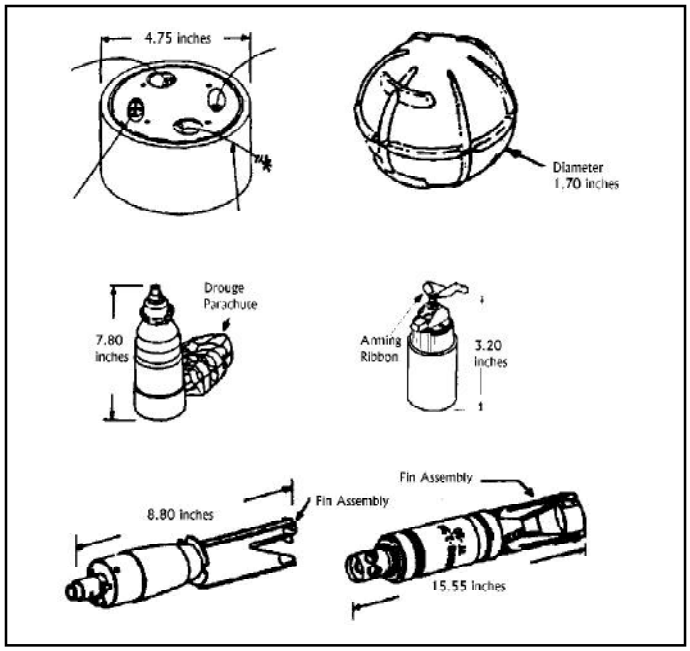

Figure 9. Typical Submunitions.

Bombs

Bombs range in weight from 1 to 3,000 pounds and in length from 3 to 10 feet. Generally, all bombs have the same components—a metal container, a fuze, and a stabilizing device (see Figure 10). The metal container, or bomb body, holds the explosive or chemical filler and may consist of one piece or multiple pieces.

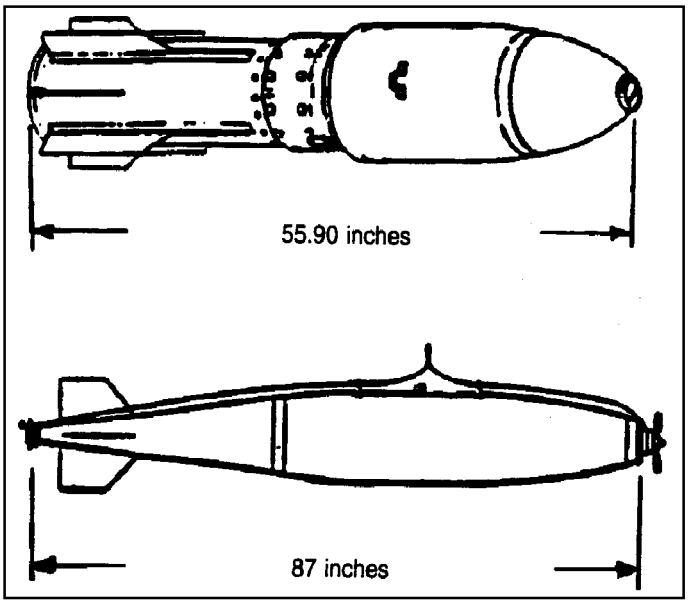

Figure 10. General Purpose Bombs.

Bombs use either mechanical or electrical fuzes, typically located in the nose or tail section, either internally or externally. Mechanical fuzes are generally armed by some type of arming vane. The arming vane operates like a propeller to line up all the fuze parts and thus arm the fuze. The fuzes may be configured as impact, proximity, or delay fuzes.

Bombs are stabilized during flight by fin or parachute assemblies attached to the rear section of the bomb. These assemblies often detach from the bomb after impact.

2.2 Encountering UXO

UXO is found in the environment in many different ways depending in part on the specific type of ordnance, when and where it was deployed, how it was deployed, and activities that may have taken place at the location since deployment. For example, UXO can be at the ground surface, can be partially buried, or can be fully buried. In fact, UXO may be found at depths in excess of 30 feet below the ground surface. Ordnance stabilized by parachute may be completely buried, but the parachute may appear at the surface.

UXO may also be found fully intact or in parts or fragments. All UXO, whether intact or in parts, presents a potential hazard and should be treated as such. In addition, the UXO casing may have deteriorated depending on the type of material used, the length of time since deployment, and the elements to which it was exposed. UXO that has deteriorated presents a particular hazard because it may contain chemical agents that could become exposed.

UXO may be encountered as an isolated munition or as one of many in a given area. The density and type of UXO in an area depends on the intensity and proximity of troop training and weapons testing activities, the degree of UXO cleanup already conducted, and the types of ordnance used. For example, UXO such as dispensers, missiles, rockets, or projectiles may still contain submunitions, or those submunitions may have been scattered across a large area. If any UXO is found, one should assume that other UXO is in the area.

3.0 UXO SAFETY AND REPORTING PROCEDURES

UXO, whether present in an area by design or by accident, poses the risk of injury or death to anyone in the vicinity. To lessen the danger of UXO hazards and to help prevent placing others at future risk, certain precautions and steps should be taken by anyone who encounters UXO.

"IF YOU DID NOT DROP IT, DO NOT PICK IT UP!"

3.1 Safety Procedures

A person can lessen the danger of UXO hazards by being able to recognize the hazard and by adhering to the following basic safety guidelines (NAVEODTECHDIV 1994):

1. After identifying potential UXO, do not move any closer to it. Some types of ordnance have magnetic or motion-sensitive proximity fuzing that may detonate when they sense a target. Others may have self-destruct timers built in.

2. Do not transmit any radio frequencies in the vicinity of a suspected UXO hazard. Signals transmitted from items such as walkie talkies, short-wave radios, citizens' band (CB) radios, or other communication and navigation devices may detonate the UXO.

3. Do not attempt to remove any object on, attached to, or near a UXO. Some fuzes are motion-sensitive, and the UXO may explode.

4. Do not move or disturb a UXO because the motion could activate the fuze, causing the UXO to explode.

5. If possible, mark the UXO hazard with a standard UXO marker or with other suitable materials, such as engineer tape, colored cloth, or colored ribbon. Attach the marker to an object so that it is about 3 feet off the ground and visible from all approaches. Place the marker no closer than the point where you first recognized the UXO hazard.

6. Leave the UXO hazard area.

7. Report the UXO to the proper authorities (see Section 2.2).

8. Stay away from areas of known or suspected UXO. This is the best way to prevent accidental injury or death.

UXO SAFETY WARNINGS

- When you see UXO, stop. Do not move closer.
- Never transmit radio frequencies (walkie talkies, citizens' band radios).
- Never attempt to remove anything near a UXO.
- Never attempt to touch, move, or disturb a UXO.
- Clearly mark the UXO area.
- Avoid any area where UXO is located.

3.2 Reporting Procedures

Any UXO discovered in the field should be immediately reported to site Explosive Ordnance Disposal (EOD) personnel. If EOD personnel are not present at the site, the military provost marshal or local law enforcement agency should be notified. The appropriate authority should initially be notified by telephone, with a written report submitted later to document the UXO hazard. Ideally, the exact location should be noted along with the type, condition, estimated size, and distinctive features of the ordnance. A sample reporting format is shown in Appendix B.

4.0 UXO RISKS AND RISK ASSESSMENTS

All sites that contain UXO present some degree of risk. Furthermore, many UXO sites are not marked or identified. *Use caution in all areas that are suspected of containing UXO. Do not rely on warning signs and physical barriers.*

UXO risks may be evaluated in terms of three main components or events: (1) UXO encounter, (2) UXO detonation, and (3) consequences of UXO detonation (PRC 1996b). The first component, UXO encounter, considers the likelihood that a person will come across a UXO and will influence the UXO through some level of force, energy, motion, or other means. The second component, UXO detonation, is the likelihood that a UXO will detonate once an encounter has occurred. Risk factors associated with these two components are discussed below in Section 4.1.

The third component, consequences of UXO detonation, encompasses a wide range of possible outcomes or results, including bodily injury or death, health risks associated with exposure to chemical agents, and environmental degradation caused by the actual explosion and dispersal of chemicals nuclear materials to air, soil, surface water, and groundwater. Generally, UXO risk evaluations take a conservative approach and assume that the consequences of UXO detonation are serious injury or death. Section 4.2 provides additional details on current risk assessment initiatives.

4.1 Risk Factors

The following factors influence the degree of acute risk associated with UXO, particularly in terms of the likelihood of an encounter and the likelihood of detonation:

Factors Affecting the Likelihood of an Encounter

- Amount or density of UXO on the property
- Depth of the UXO
- Size of the UXO
- Current and potential property use
- Accessibility of the property
- Topography
- Vegetation or ground cover
- Soil type
- Climate

Factors Affecting the Likelihood of Detonation

- UXO fuze type and sensitivity
- Activities of individuals frequenting the property

These factors are interrelated and cannot be evaluated singly to assess risk. Each of the factors is discussed below.

Density of UXO. The greater the number of UXO in a given area, the greater the possibility that a person will encounter UXO. Conversely, a low UXO density decreases the possibility that a person will encounter UXO. Density is mainly determined by the type and quantity of ordnance used in a particular area. For example, areas with submunitions may have a higher UXO density than areas with other types of UXO. Density can also be affected by soil type and climate, as discussed later.

Depth of UXO. Individuals are usually more likely to encounter UXO that is on the ground surface or is partially buried than UXO that is fully buried. For buried UXO, the likelihood of an encounter depends on the activities conducted at the site. Activities that could disturb the subsurface UXO include shallow digging, trenching, plowing, and construction, among others. Furthermore, UXO that is buried above the frost line may eventually migrate to the surface (see climate).

Size of the UXO. The size of a UXO influences whether it will be seen. Because large UXO is more visible than small UXO, a person would be more likely to see and avoid contact with large UXO.

Current and potential property use. Property use that increases the number of individuals on a property increases the likelihood of a UXO encounter. For example, UXO is more

likely to be encountered by a person on property used for recreational purposes (such as hiking, hunting, or camping) than on property used for grazing or as a wildlife preserve. In general, the larger and deeper the area disturbed by property use activities, and the greater the force associated with those activities, the greater the likelihood that a UXO will be encountered and detonated.

Accessibility of the property. The accessibility of an area will affect the number of people who would enter the property and encounter UXO. For example, an unfenced area near a road would be more accessible than a remote, fenced area, increasing the likelihood of an encounter with UXO.

Topography. Topography also influences the number of people likely to access a site, as well as the amount and type of property use. People are more likely to enter flat property near populated areas than remote property with a rugged terrain. In addition, topography influences where UXO may concentrate. UXO is more likely to migrate to valleys and depressions through surface water movement and soil erosion.

Vegetation and ground cover. Heavy vegetation and ground cover may conceal even large surface UXO; however, it may also limit access to an area, preventing potential UXO encounters.

Soil type. Soil type influences the depth to which UXO may penetrate as well as whether the fuze will activate. Some fuze types require a substantial impact before they will activate. If the munition lands in mud or fine soil, the fuze may not activate as designed. Site conditions such as these may in turn increase the likelihood and density of UXO. Some soils are also more easy to penetrate than others, and as a result, UXO in soft soils may be found at greater depths than expected.

Climate. Climate affects the surface migration of UXO, the visibility of UXO, and the migration of buried UXO to the surface. Climates with heavy precipitation and high winds are more likely to cause UXO to migrate through surface water movement and soil erosion, and snow cover may conceal surface UXO. Finally, climate affects the depth of the frost line and freeze-thaw cycles. In general, the colder the climate, the deeper the frost line and the greater number of UXO that may migrate to the surface. Similarly, the greater the number of freeze-thaw cycles over an extended period of time, the sooner UXO may migrate to the surface.

UXO fuze type and sensitivity. In very general terms, magnetic and proximity fuzes are considered the most sensitive, and pull-friction and pressure-type fuzes are considered the least sensitive (Lantzer and others, 1995). The fuze sensitivity, together with other factors such as whether the fuzes are armed and the fuze's location on the munition influence the likelihood of detonation.

Activities of individuals frequenting the area. The activities of individuals in areas containing UXO, combined with the fuze type, may increase the likelihood of detonation. For example, UXO with impact fuzes would more likely detonate in areas of heavy excavation than in wildlife areas.

4.2 Risk Assessment Initiatives

DoD is undertaking several initiatives to assess risks posed by UXO. These efforts include (1) conducting risk assessments at specific military bases, (2) developing a standardized methodology to assess occupational and residual risks in areas containing UXO (Mulvihill and others 1996), and (3) developing a methodology for ranking ordnance and explosive waste sites based on life cycle cost and public risks (QuantiTech 1994). The results of any site-specific risk assessment effort, however, are limited by the amount and reliability of data available about the site.

The first step in determining site-specific risks is to conduct a site assessment. Typical site assessments involve collecting existing information on such factors as soils and geology, terrain, vegetation, climate, and current and predicted land use. The assessment may also require a visual inspection or sampling of soil, water, or air. The results are used to determine whether risks can be readily managed or whether more detailed study and analysis is required.

If more detailed study and analysis is required, a site evaluation is conducted to assess the level of risk posed by the site and to make an informed risk management decision. Information is collected on the types of munitions used in the area, materials associated with those munitions, and the environmental setting. The information collected is more specific than that collected during a site assessment. The results of the site evaluation are used to estimate the overall risk, determine whether a site-specific response is required, and evaluate the effectiveness of response options for a specific risk.

5.0 UXO MANAGEMENT, CHARACTERIZATION, AND REMEDIATION

Several options and technologies are available to manage, characterize, and remediate property containing UXO so that the hazards and risks are reduced or eliminated. The applicability of the options and technologies depends on various factors such as type and density of UXO present, depth of UXO, topography, land use, and degree of risk posed by the UXO. In addition, existing technologies are being improved and new technologies are being developed to increase the effectiveness of UXO characterization and remediation. The following sections discuss management options and remediation options, and UXO characterization and excavation technologies.

5.1 Management Options

Management options provide a means of reducing immediate risks by controlling potential encounters with UXO. However, they do not eliminate the risk because the UXO remains in place. Management options include restricting property access, limiting property uses or activities that can occur on the property, conducting community education and awareness programs, and conducting surface sweeps for UXO. These options are typically used as a readily available, proven method of addressing risk when UXO charaterization and removal cannot be conducted in a safe, efficient, or cost-effective

manner. Two management options commonly used include restricting access to the property and limiting the activities that can occur on the property.

Restricting access. Access to areas containing UXO can be limited by installing fencing or barriers to reduce the number of people who may enter the property and encounter a UXO. This option might be applicable as a short-term measure, particularly for remote property that is not used or for property with extremely rugged terrain.

Limiting activities. Activities that can take place on property with UXO can be limited through deed restrictions or through other means. For example, a deed restriction may prohibit property development or may prohibit excavation and other earthmoving activities. In addition, notices of prohibited activities and UXO warning signs can be posted throughout the area. A typical warning sign may state "Danger--UXO. Do Not Enter." This option might be applicable for private property.

5.2 Remediation Options

Unlike management options, remediation options reduce risks from UXO by removing all or some of the UXO present in an area. DoD policies and procedures regarding remediation of property containing UXO are defined in *DoD Ammunition and Explosives Safety Standards* (DoD 1995). The standards specify procedures for UXO characterization and control at active installations, UXO remediation of property that is to be transferred or leased to another entity, and remediation of FUD sites.

DoD procedures for remediating property with UXO include the following steps:

- Determine the ultimate land use
- Determine the boundaries of the areas to be investigated and remediated
- Determine the type of known or suspected UXO
- Define the locations and depths of UXO
- Remove or neutralize the UXO
- Document the process
- Provide continued surveillance of areas where UXO is above the frost line but below the remediation depth

In cases when site-specific planning is not possible, DoD policies and procedures specify remediation depths based on land use. The remediation depths listed in Table 1 are to be used for interim planning. Although the table provides guidance on remediation depths, remediation to those depths does not assure that all UXO has been removed. Residual UXO may exist.

Planned End Use	Remediation Depth
Unrestricted: Commercial, residential, utility, subsurface recreational, and construction	10 feet*
Public Access: Farming, agricultural, surface recreational, vehicle parking, and surface supply storage	4 feet
Limited Public Access: Livestock grazing and wildlife preserve	1 foot
Not Yet Determined	Surface

Table 1

Note: * If construction will occur, the presence of UXO must be determined to a depth of 4 feet below the planned excavation depths. Any UXO should be remediated to those depths.

5.3 Characterization Technologies

Once a remediation depth is selected, the appropriate technologies can be implemented to characterize UXO. The technologies available to detect and characterize UXO vary in terms of the types and depths of UXO they can detect, the topography for which they can be used, and their overall effectiveness. The various technologies currently in use are discussed below.

Magnetometry. Magnetometry, which involves the use magnetometers and gradiometers, is designed to locate buried ordnance by detecting irregularities in the earth's magnetic field caused by ferrous (iron-based) materials in the ordnance. Gradiometers typically consist of two magnetometers configured to measure the spatial rate of change in the magnetic field. There are numerous types of magnetometers, many of which were developed to improve detection sensitivity under varying soil conditions. The components of a typical magnetometer include a detection sensor, a power supply, a computer data system, and a means to record the locations of detected anomalies. More advanced magnetometers incorporate a navigation system, such as a differential global positioning system (GPS), to determine location. Magnetometers can be hand-held, man-portable, towed by a vehicle, or mounted on aircraft. Figure 11 shows a man-portable system.

Figure 11. Typical Magnetometer System

The effectiveness of magnetometers depends on their sensitivity, the distance between the sensor and UXO, the amount of ferromagnetic material in the UXO, background magnetic noise, and site-specific soil properties. For optimal performance, magnetometers must be placed close to the ground surface. Recent technology demonstrations of commercially available magnetometry technology showed that hand-held and vehicle-towed magnetometers detected between 50 to 83 percent of the ordnance present (PRC 1996a). The number of false alarms generated for each UXO item detected (false alarm ratio) was 10 for the 50 percent detection rate and 4 for the 83 percent detection rate. Airborne magnetometers showed little or no capability to detect UXO.

Ground Penetrating Radar. Ground penetrating radar (GPR) has been used for many years as a remote sensing technology. The main elements of any GPR system are the transmitter unit, the receiving unit or antenna, the control unit, and the display and recorder unit. The transmitter produces short pulses of electromagnetic energy that are directed toward the ground. As the energy pulses travel into the ground, buried objects reflect the signals back to the receiving unit, where they are recorded and processed into an image. Figure 12 shows a typical GPR system.

Figure 12. Typical GPR System

Many environmental factors significantly affect the ability of GPR systems to produce accurate images. Important factors include the density and type of vegetative cover, water content of the vegetation and soil, and topography. For optimal performance, the antenna should be positioned perpendicular to the ground and the soil should be dry. In general, GPR is not effective in saturated soils and wet areas because water absorbs GPR energy. Of nine GPR systems evaluated during recent technology demonstrations, none of the systems could effectively detect UXO, primarily because of the wet clay soils at the test site. For the systems that detected ordnance, the detection rate ranged from 1 to 5 percent of the ordnance present. The false alarm ratio was 28 and 3, respectively (PRC 1996a).

Electromagnetic Induction. Electromagnetic (EM) induction can be used to detect both ferrous and nonferrous metallic UXO. EM induction systems transmit electric current into the soil to detect metallic objects. The systems measure either the secondary magnetic field induced in metal objects or the difference between the electrical conductivity of the soil and the electrical conductivity of buried objects such as UXO. Components of an EM induction system include transmitting and receiving units, a power supply, a computer data acquisition system, and a means of recording locations of anomalies. More advanced systems typically incorporate a navigation system such as GPS to determine locations. Most EM induction systems are man-portable units consisting of a small, wheeled cart to transport the transmitter and receiver, a backpack containing the system's electrical components, and a hand-held data recorder. Figure 13 shows a typical EM induction system.

Figure 13. Typical EM Induction System

EM induction systems are most effective in detecting metallic objects near the soil surface. The performance of EM induction systems depends on the distance between the transmitter-receiver assembly and the UXO and the size of the UXO. For optimal performance, the assembly must be positioned close to the ground. Like magnetometers, EM induction systems experience high background magnetic noise levels when they are used to survey areas with high concentrations of surface ordnance fragments. EM induction systems evaluated during recent technology demonstrations were capable of detecting between 11 and 85 percent of the ordnance present. The corresponding false alarm ratio for these EM systems were 13 and 5, respectively (PRC 1996a).

Infrared Sensors. Infrared (IR) sensor technologies can be used to identify objects by measuring their thermal energy signatures. UXO on or near the soil surface may have a different heat capacity or heat transfer properties than the surrounding soil; theoretically, this temperature difference can be detected and used to identify UXO. For optimal performance of IR sensor technologies, a sharp thermal contrast must exist between the UXO and its surroundings—usually the soil surface. IR sensor results also depend on the type and density of vegetative cover, weather conditions, time of day, and specific size and properties of the UXO. In practice, IR sensor technologies can be used to detect UXO located on an unvegetated soil surface. However, they have shown a minimal ability to characterize UXO.

Multiple Sensors. Combining two or more sensor technologies into a multisensor approach has been demonstrated to improve UXO detection and characterization. For example, during technology demonstrations of commercially available sensor technologies, magnetometers combined with an EM sensor were capable of detecting between 65 to 72 percent of the ordnance present. The false alarm ratios were 9 and 21, respectively.

Other Technologies. Other technologies are currently being developed for detecting UXO, but have not been successfully demonstrated. These include nuclear technology, acoustic sensors, and biological sensors. Nuclear technology is based on the premise that some chemicals in explosive compounds respond in a unique way, such as emitting gamma particles, when exposed to radiation. However, nuclear technology cannot penetrate soils well, and if the soils have been treated with fertilizers, the number of false alarms may be high (Heckelman 1995). Acoustic sensors transmit sound waves through the soil; the sound waves then bounce off or echo back from any object encountered in the soil. However, acoustic sensors cannot discriminate UXO from other objects, and the relatively long wave lengths used by the acoustic sensors cannot detect small UXO. Finally, dogs (biological sensors) are being trained to detect vapors given off by explosives in munitions, but they cannot detect UXO more than 6 inches below the ground surface. After 16 months the vapors from UXO lessen such that detection by smell is not an effective detection option (Heckelman 1995).

5.4 Excavation Technologies

Historically, the UXO excavation phase primarily involved manual methods that were very labor-intensive. Research and development efforts over the last 20 years have focused on increased mechanization to improve efficiency and enhance operator safety. The effectiveness of any excavation technology, however, depends on the effectiveness of the technology used to detect UXO. If a detection system generates a high number of false alarms over a large area, that area will require otherwise unnecessary excavation. This is further discussed in Section 6.0.

Available UXO excavation technologies are grouped into three categories—manual methods, mechanized systems, and remote-controlled systems.

Manual Methods. Manual UXO excavation methods are performed entirely without mechanized equipment. Standard manual excavation methods include using shovels and other digging tools to excavate soil and expose potential UXO targets. Manual excavation methods require that additional UXO detection activities be conducted to confirm target removals and increase the probability of removing all UXO present. Manual methods work best for near-surface and shallow subsurface UXO. They are also more effective in excavating small UXO (such as small arms munitions and grenades) than large munitions (such as bombs). Manual methods present significant safety risks to workers. In heavily vegetated areas, vegetation should be removed to increase worker safety.

In 1985, DoD estimated that the cost to manually excavate UXO to 0.5 meter below the surface may range from $140 to $315 per item cleared, based on an economic model for clearing 1,000 acres of hilly terrain with medium overgrowth (NAVEODTECHCEN 1985).

Mechanized Systems. Mechanized UXO excavation systems include the use of excavators, bulldozers, front-end loaders, and other heavy construction equipment. Historically, backhoe-type excavators have been the most commonly used mechanized system. extraction. Vacuum excavators use high-speed air to penetrate and dislodge the soil, a vacuum to extract the dislodged soil, and a conveyor belt to transport the soil away from the excavation. A vacuum excavator evaluated during recent demonstrations of commercially available excavation technologies was capable of excavating to 3 meters below ground surface in soft, silty soil.

The use of mechanized systems is generally faster and more efficient than the use of only manual systems. In addition, mechanized systems offer a higher degree of worker safety because the machine separates the UXO and the operator. Mechanized systems operate less efficiently in remote areas, in areas with muddy or saturated soils, or in areas with shallow water tables. Mechanized excavation methods may require that additional UXO detection activities be conducted to confirm target removals and increase the probability of removing the UXO.

In 1985, DoD estimated that the cost to mechanically excavate UXO to 0.5 meter below the surface may range from $35 to $450 per item cleared, based on an economic model for clearing 1,000 acres of hilly terrain with medium overgrowth (NAVEODTECHCEN 1985).

Remote-Controlled Systems. Remote-controlled UXO excavation systems include telerobotic and autonomous systems. In general, the capabilities, effectiveness, and implementability of remote-controlled systems are the same as those for mechanized systems. The primary difference is that the operator of a remote-controlled system remains outside the immediate hazard area. Of the three categories of UXO excavation methods, remote-controlled systems offer the highest degree of safety.

Remote-controlled systems typically include a navigation and positioning component—usually a GPS. However, GPS satellite signals can be obstructed by tall trees and dense vegetation, limiting the system's accuracy and applicability. GPS can be integrated with an inertial navigation system to increase the capability of the navigation system.

Remote-controlled excavation systems evaluated during recent technology demonstrations had difficulty exposing small targets in fine, silty soil. In some cases, the remote-controlled systems required the use of man-portable UXO detection systems to search the excavated soil for UXO targets. In addition, the process can be relatively slow. For example, one system demonstrated excavated only five ordnance items per day. The equipment operates best in relatively flat grassy or unvegetated areas where the equipment can be easily maneuvered (PRC 1994 and 1996a).

6.0 DECISION-MAKING FACTORS

Various parties are involved in decisions regarding the management, remediation, and use of property containing UXO. For active installations, DoD personnel make decisions based on specific guidance and policies. However, some property that contains UXO will be transferred or leased under the Base Realignment and Closure (BRAC) Act, and many FUD sites have already been transferred and converted to different uses.

For BRAC sites, Restoration Advisory Boards (RAB) provide input in the decision-making process. FUD sites, on the other hand, may have been transferred decades ago and may be managed, owned, or operated by a variety of entities, including other federal agencies such as the Department of Interior or Department of Agriculture, state or local government, commercial enterprises, and the private sector.

DoD is developing a Range Rule that identifies a process for appropriate response actions on military ranges that (1) have been taken out of service and put to new use, (2) are FUD sites, and (3) are slated for transfer outside of military control under the BRAC program. The process has six basic phases—range identification, range assessment, range evaluation, site-specific response, recurrent review, and final range close-out.

Two primary impediments to efficient and effective clearance of UXO are (1) cost and (2) the current lack of efficient and effective UXO characterization and excavation technologies. A 1993 BRAC report to Congress states, "With current technology, the cleanup of UXO and explosives residues is a labor intensive, dangerous, and expensive process" (DoD 1993). Although costs typically range from $3,000 to $7,000 per acre, they are significantly influenced by how the land will be used and the extent of contamination. For example, the estimated cost for cleaning up Kaho'olawe Island, a 28,800-acre former Navy ordnance impact range in Hawaii, is $400 million, or approximately $14,000 per acre (Heckelman 1995). The extent of contamination is great, and the island will be reused for cultural, historical, archeological, and educational purposes. Mobilization costs will also be high for any work conducted on the uninhabited island.

In 1994, the Army estimated that the cost to clean up about 53,650 acres at Jefferson Proving Ground (JPG) could range from $216 million for limited public access (or about $4,000 per acre) to $7.8 billion for unrestricted use (or about $1.4 million per acre). However, the estimated value of the land is $25 million for unrestricted use (Heckelman 1995). The value of the land for limited public access would be far less.

The cost to clean up property for use as wildlife habitat (limited access) is far less than for other uses, as demonstrated by the cost estimates for JPG ($4,000 per acre versus $1.4 million per acre). The ordnance impact range at Fort Meade in Maryland, which covers about 7,600 acres, has been transferred to the U.S. Fish and Wildlife Service for use as a wildlife refuge, and most of the impact range at Fort Ord, California, may be transferred to the Bureau of Land Management for use as wildlife habitat.

The effectiveness of characterization and excavation technologies is also a limiting factor. Although many characteriztion systems are capable of detecting and locating UXO, they are generally unable to discriminate between ordnance and nonordnance items. This inability to discriminate increases excavation due to false alarms. The effectiveness of excavation technologies is generally limited by (1) the excavation depth that can be achieved compared to the depth of the UXO present and (2) the time required to excavate one item compared to the number of items that must be excavated. Furthermore, the environmental impacts from UXO clearance could range from minimal to significant depending on the amount of vegetation that must be removed, the depth and areal extent of remediation, and the excavation method used. Results could include loss of wildlife habitat, soil erosion, and loss of flora and fauna species, among others. All of these factors, coupled with those discussed above, must be considered and balanced against potential risk and the degree of risk reduction that could be achieved. As UXO characterization and excavation technologies improve, the effectiveness of remediation should increase, and the time required for remediation, the cost of remediation, and the environmental impacts from remediation should decrease.

POINT OF CONTACT

Naval Explosive Ordnance Disposal Technology Division
UXO Countermeasures Department
Code 50B22
2008 Stump Neck Road
Indian Head, Maryland 20640-5070

REFERENCES

Department of Defense (DoD). 1993. "1993 Report to the President from the Defense Base Closure and Realignment Commission."

DoD. 1995. *DoD Ammunition and Explosives Safety Standards*. Chapter 12. "Real Property Contaminated with Ammunition, Explosives, or Chemical Agents." DoD 6055.9. March 1.

General Accounting Office (GAO). 1995a. "Military Bases: Environmental Impact at Closing Installations." GAO/NSIAD-95-70. February.

GAO. 1995b. "Unexploded Ordnance—A Coordinated Approach to Detection and Clearance is Needed." GAO/NSIAD-95-197. September.

Hanson, J.V., T.D. Evans, R.A. Hevenor, and J. Ehlen. 1992. "Mine Detection in Dry Soils Using Radar." U.S. Army Topographic Engineering Center Report No. R-163. March 17.

Heckelman, K. 1995. "Unexploded Ordnance and Explosive Residuals on Military Ranges—Is the Remediation Cure Worse than the Ailment?" May 12.

Lantzer, Major N., and others. 1995. "Risk Assessment: Unexploded Ordnance." Point paper prepared for NAVEODTECHDIV. August.

Institute for Defense Analyses (IDA). 1995. "Demonstrator Performance at the Unexploded Ordnance Advanced Technology Demonstration at Jefferson Proving Ground (Phase I) and Implications for UXO Clearance." Prepared for Deputy Under Secretary of Defense for Environmental Security. IDA Paper P-3114. October.

Mulvihill, R.J. and others. 1996. "Unexploded Ordnance Risk Assessment Framework." Presented at UXO Forum '96. April.

Naval Explosive Ordnance Disposal Technology Center (NAVEODTECHCEN). 1985. "Range Clearance - An Economic Model, Final Report." Indian Head, Maryland. May.

Naval Explosive Ordnance Disposal Technology Division (NAVEODTECHDIV). 1990. "Range Clearance Technology Assessment (Revision 1), Final Report." March.

NAVEODTECHDIV. 1994. *Explosive Ordnance Disposal Procedures*. Technical Manual 60A-1-1-15. April 4.

PRC Environmental Management, Inc. (PRC). 1994. "UXO Advanced Technology Program at Jefferson Proving Ground (Phase I)." U.S. Army Environmental Center Report No. SFIM-AEC-ET-CR-94120.

PRC. 1996a. "Draft Technical Report for Controlled Site Phase II at Jefferson Proving Ground." Prepared for NAVEODTECHDIV. June.

PRC. 1996b. "Unexploded Ordnance Assessment of U.S. Military Ranges in Panama: Empire, Balboa West, and Pina Ranges. Prepared for Panama Canal Treaty Implementation Plan Agency. April.

PRC Inc. 1995. "System/Design Trade Study for the Navigation of the Airborne, Ground Vehicular and Man-Portable Platforms in Support of the Buried Ordnance Detection, Identification, and RemediationTechnology." U.S. Army Environmental Center Report No. SFIM-AEC-ET-CR-9503. March.

QuantiTech, Inc. 1994. "OEW Site Mitigation Prioritization, Final Report, Version D." Prepared for U.S. Army Corps of Engineers, Huntsville Division. Technical Report 93R004vD

U.S. Department of the Army (U.S. Army). 1994. *Unexploded Ordnance (UXO) Procedures*. Field Manual No. 21-16. Fleet Marine Force Manual No. 13-8-1. August.

U.S. Army Corps of Engineers (USACE). 1995. *Sensor Technology Assessment for Ordnance and Explosive Waste Detection and Location*. March 1.

APPENDIX A

GLOSSARY OF UXO TERMINOLOGY

(2 pages)

APPENDIX A
GLOSSARY OF UXO TERMINOLOGY

antimateriel: Designed to cause deterioration of or damage to selected materiel.

antipersonnel: Designed to kill, wound, or obstruct personnel.

antitank: Designed to be used against tanks.

arming device: A device designed to perform the electrical and/or mechanical alignment necessary to initiate an explosive train.

caliber: The diameter of a projectile or the diameter of the bore of a gun or launching tube. Caliber is usually expressed in millimeters or inches.

casing: The fabricated outer part of ordnance designed to hold an explosive charge and the mechanism required to fire this charge.

dispenser: An item designed to be mounted, but not permanently fixed, on aircraft to carry and eject small ordnance.

electromagnetic induction: Transfer of electrical power from one circuit to another by varying the magnetic linkage.

explosive: A substance or mixture of substances that can undergo a rapid chemical change generating large quantities of energy generally accompanied by hot gases.

fragmentation: Term applied to ordnance indicating that it is primarily intended to produce a fragmentation effect.

fuze: 1. A device with explosive components designed to initiate a train of fire or detonation in ordnance. 2. A nonexplosive device designed to initiate an explosion in ordnance.

fuze, delay: Any impact fuze incorporating a means of delaying its action after contact with the target. Delay fuzes are classified by the length of time of the delay.

fuze, impact: A fuze in which detonation is initiated by the force of impact and that usually functions instantaneously or after a short delay.

fuze, proximity: A fuze wherein primary initiation occurs by remotely sensing the presence, distance, and/or direction of the target through the characteristics of the target itself or its environment.

fuze, self-destruct: A fuze designed to burst a projectile before the end of its flight.

gradiometer: Magnetometer for measuring the rate of change of a magnetic field.

ground penetrating radar: A system that uses pulsed radio waves to penetrate the ground and measure the distance and direction of subsurface targets through radio waves that are reflected back to the system.

illumination: Term applied to ordnance indicating that it is primarily intended to produce light of high intensity. Such ordnance usually contains a flare and may contain a parachute for suspension in the air.

incendiary: Any flammable material that is used as a filler in ordnance intended to destroy a target by fire.

magnetometer: An instrument for measuring the intensity and direction of magnetic fields.

materiel: All items necessary for the equipment, maintenance, operation, and support of military activities without distinction as to their application for administrative or combat purposes; excludes ships or naval aircraft.

munition: 1. Ordnance. 2. Any and all supplies and equipment required to conduct warfare.

ordnance: 1. Military weapons collectively, along with ammunition and the equipment to keep them in good repair. 2. Explosives, chemicals, pyrotechnics, and similar stores, e.g., bombs, guns and ammunition, flares, smoke, napalm.

projectile: An object projected by an applied force and continuing in motion by its own inertia, as a bullet, bomb, shell, or grenade. Also applied to rockets and to guided missiles.

propellant: An agent such as an explosive powder or fuel that can be made to provide the necessary energy for propelling ordnance.

smoke: 1. Filling for ordnance such as bombs, projectiles, and grenades. 2. Term applied to ordnance indicating that it is primarily intended to produce smoke of the types or colors specified.

unexploded ordnance (UXO): Explosive ordnance that has been primed, fuzed, armed, or otherwise prepared for action, and that has been fired, dropped, launched, projected, or placed in such a manner as to constitute a hazard, and that remains unexploded by malfunction, design, or any other cause.

warhead: That part of a missile, projectile, rocket, or other munition that contains the explosive system, chemical or biological agents, or inert materials intended to inflict damage.

white phosphorous: A chemical that when exposed to air, burns spontaneously, producing dense clouds of white smoke.

APPENDIX B

FORMAT FOR REPORTING UNEXPLODED ORDNANCE

(1 page)

APPENDIX B
FORMAT FOR REPORTING UNEXPLODED ORDNANCE

TO: (EOD Personnel or Other Appropriate Authority)

FROM: _____(Name, Organization)

RE: UXO Encounter

1. Time of Encounter: (Date and time)
2. Location of Encounter: (Global Positioning System coordinates, if known)
3. Individuals Present: (Names, organizations)
4. Condition of Ordnance: (Buried, partially buried, fully exposed)
5. Type of Ordnance: (Grenade, projectile, rocket)
6. Estimated Size of Ordnance: (Length, width, height)
7. Distinctive Features: (Shape, color, markings)
8. Nearby Structures: (Names, types, and distances from ordnance)

COMMENTS AND SUGGESTIONS

Comments, recommendations, and suggested changes are being solicited so that this document can be revised for future distribution. Please note your comments and recommendations below and send them to:

Naval Explosive Ordnance Disposal Technology Division
UXO Countermeasures Department
Code 30U
2008 Stump Neck Road
Indian Head, Maryland 20640-5070

For your convenience, the back of this page is self-addressed for mailing purposes.

Name: _____

Address: _____

_____

_____

_____

Daytime Phone: _____

Comments and Suggestions

(Fold)

Naval Explosive Ordnance Disposal Technology Division
UXO Countermeasures Department
Code 50B22
2008 Stump Neck Road
Indian Head, Maryland 20640-5070

BACK