ORNL-4905

Dr. E. Fletcher

B-1

BLAST TESTS OF EXPEDIENT SHELTERS

Cresson H. Kearny
Conrad V. Chester

DISTRIBUTION STATEMENT A
Approved for Public Release
Distribution Unlimited

OAK RIDGE NATIONAL LABORATORY
OPERATED BY UNION CARBIDE CORPORATION • FOR THE U.S. ATOMIC ENERGY COMMISSION

20010615 002

Printed in the United States of America. Available from
National Technical Information Service
U.S. Department of Commerce
5285 Port Royal Road, Springfield, Virginia 22151
Price: Printed Copy $5.45; Microfiche $1.45

This report was prepared as an account of work sponsored by the United States Government. Neither the United States nor the United States Atomic Energy Commission, nor any of their employees, nor any of their contractors, subcontractors, or their employees, makes any warranty, express or implied, or assumes any legal liability or responsibility for the accuracy, completeness or usefulness of any information, apparatus, product or process disclosed, or represents that its use would not infringe privately owned rights.

ORNL-4905
UC-41 — Health and Safety

HEALTH PHYSICS DIVISION
Civil Defense Research Project

BLAST TESTS OF EXPEDIENT SHELTERS

by

Cresson H. Kearny and Conrad V. Chester

POR No. 6749

MIDDLE NORTH SERIES

MIXED COMPANY EVENT

FINAL PROJECT OFFICERS REPORT - LN316

JANUARY 1974

OAK RIDGE NATIONAL LABORATORY
Oak Ridge, Tennessee 37830
Operated by
UNION CARBIDE CORPORATION
for the
U.S. ATOMIC ENERGY COMMISSION

TABLE OF CONTENTS

Page

ABSTRACT 1

1. INTRODUCTION 2

1.1 THE INCREASING NEED FOR EXPEDIENT SHELTERS AFFORDING IMPROVED BLAST PROTECTION 2

1.2 SOME PRIOR BLAST TESTS OF EXPEDIENT-TYPE SHELTERS . . . 3

1.3 OVERALL OBJECTIVES OF THE ORNL TESTS OF EXPEDIENT SHELTERS IN THE 500-TON SURFACE DETONATION OF OPERATION MIXED COMPANY EVENT 4

1.4 BACKGROUND OF THE ORNL EXPEDIENT SHELTERS TESTED IN OPERATION MIXED COMPANY EVENT 5

1.5 CORRELATIONS WITH DEFENSE NUCLEAR AGENCY REPORTS 6

2. TEST PROCEDURES IN THE 500-TON SURFACE DETONATION OF MIXED COMPANY 7

2.1 SHOT PARTICIPATION 7

2.2 INSTRUMENTATION 7

3. SMALL-POLE SHELTERS 10

3.1 PURPOSE 10

3.2 CONSTRUCTION 10

3.3 LOCATIONS AND TEST RESULTS 15

3.4 CONCLUSIONS AND RECOMMENDATIONS 16

4. EXPEDIENT QUICKLY CLOSABLE BLAST DOOR 19

4.1 PURPOSE 19

4.2 CONSTRUCTION 19

4.3 LOCATIONS AND TEST RESULTS 21

4.4 CONCLUSIONS AND RECOMMENDATIONS 21

Page

5. WIRE-CATENARY-ROOFED SHELTERS 23

5.1 PURPOSE 23

5.2 CONSTRUCTION 23

5.3 LOCATION AND TEST RESULTS 26

5.4 CONCLUSIONS AND RECOMMENDATIONS 29

6. SHORED-TRENCH STOOP-IN SHELTER 30

6.1 PURPOSE 30

6.2 CONSTRUCTION 30

6.3 LOCATION AND TEST RESULTS 32

6.4 CONCLUSIONS AND RECOMMENDATIONS 33

7. LOG-COVERED TRENCH SHELTER 34

7.1 PURPOSE 34

7.2 CONSTRUCTION 35

7.3 LOCATIONS AND TEST RESULTS 35

7.4 CONCLUSIONS AND RECOMMENDATIONS 37

8. A-FRAME POLE SHELTER 38

8.1 PURPOSE 38

8.2 CONSTRUCTION 38

8.3 LOCATION AND TEST RESULTS 40

8.4 CONCLUSIONS AND RECOMMENDATIONS 40

9. DOOR-COVERED TRENCH SHELTER 41

9.1 PURPOSE 41

9.2 CONSTRUCTION 41

9.3 LOCATIONS AND TEST RESULTS 42

9.4 CONCLUSIONS AND RECOMMENDATIONS 44

Page

10. EXPEDIENT BLAST VALVES 45

10.1 PURPOSE 45

10.2 CONSTRUCTION 46

10.3 LOCATION AND TEST RESULTS 47

10.4 CONCLUSIONS AND RECOMMENDATIONS 48

11. OVERALL CONCLUSIONS AND RECOMMENDATIONS 49

* * *

APPENDIX A: AVAILABILITY OF POLES AND LOGS FOR EXPEDIENT SHELTERS 50

APPENDIX B: CAGED-STRIPS BLAST VALVE 54

B.1 PURPOSE 54

B.2 CONSTRUCTION 54

B.3 LOCATIONS AND TEST RESULTS 59

B.4 CONCLUSIONS AND RECOMMENDATIONS 60

LIST OF FIGURES

		Page
2.1	Yielding Foil Membrane Gauges	8
2.2	Improvised Beam Deflection Gauge	8
3.1	Vertical Section through Half-Scale Small-Pole Shelters LN316-1A and LN316-1B	10
3.2	Frame and Side Walls of Half-Scale Small-Pole Shelter LN316-1A	11
3.3	Building Frame of the 6-foot-long Entryway of Half-Scale Small-Pole Shelter LN316-1A	11
3.4	Pictorial View of Small-Pole Shelter, Dimensioned to Meet the Threat of 100-Kiloton or Larger Weapons	12
3.5	Plan and Elevation of Small-Pole Shelter Built with Minimum Cover	13
3.6	Photographer Upside-down in Entryway of Half-Scale Small-Pole Shelter LN316-1A After the Blast	15
3.7	Looking down the Horizontal Part of the Entryway into Main Room of Half-Scale Small-Pole Shelter LN316-1A	16
3.8	Detail of Small-Pole Shelter LN316-1B	17
4.1	Expedient Quickly Closable Blast Door	20
5.1	Wire-Catenary-Roofed Shelter	23
5.2	Toe-Nailing a Strut-Post of a Wire-Catenary-Roofed Shelter	24
5.3	Stacking "Posts" to Hold Earth Cover in the End of Half-Scale Wire-Catenary-Roofed Shelter LN316-9	26
5.4	Shelter LN316-3A After Withstanding an Outside Overpressure of About 13 psi	27
6.1	Shored-Trench Stoop-In Shelter	31
6.2	Tamping the Sandy-Earth Backfill of the Shored-Trench Stoop-In Shelter	32

Page

6.3 Undamaged Shored-Trench Stoop-In Shelter After Withstanding Over 12 psi Overpressure 32

7.1 Log-Covered Trench Shelter LN316-9A 34

7.2 Undamaged Vertical and Sloped Earth Sides of Log-Covered Trench Shelter LN316-4B 36

8.1 Half-Scale A-Frame Pole Shelter 39

8.2 Half-Scale A-Frame Pole Shelter with the End Opposite Its Entryway Removed, After Withstanding about 16 psi Overpressure Effects 39

9.1 Door-Covered Trench Shelter 42

9.2 Badly Cracked Door Over Entryway Trench of Door-Covered Trench Shelter 43

10.1 Vertical Cross Section Through an Overlapping-Flaps Blast Valve 46

10.2 100 psi Overlapping-Flaps Blast Valve 47

A.1 Adequacy of Timber for Expedient Shelters 51

B.1 Partly Disassembled Caged-Strips Blast Valve After Testing at the Measured 65 psi Range 55

B.2 Caged-Strips Blast Valve LN316-11B 56

B.3 Construction Details of Caged-Strips Blast Valve 57

BLAST TESTS OF EXPEDIENT SHELTERS

Cresson H. Kearny and Conrad V. Chester

ABSTRACT

Oak Ridge National Laboratory field tests of expedient shelters during the past three years had resulted in the selection and development of six types of expedient shelters. These were demonstrated by construction exercises to be the most practical for average rural and small-town Americans to build in the principal environmental regions of the United States. Each type of shelter is designed to be built within 48 hours by average family groups of such Americans, using only widely available materials such as trees, to provide all members with high-protection-factor shelter. To evaluate the blast protection afforded by these six types of expedient shelters, they were blast tested as a part of Defense Nuclear Agency's Mixed Company Event, in the blast area of a 500-ton TNT detonation--equivalent in air blast effects to a 1.0–1.8 kiloton nuclear detonation.

A total of twelve shelters, representing six expedient types, were subjected to blast effects at surface overpressures ranging from 29 to 3 pounds per square inch (psi). All except the two Door-Covered Trench Shelters were tested as closed shelters. Only one shelter was damaged: the Door-Covered Trench Shelter that was tested as an open shelter at 5 psi.

The six types of shelters, tested at the following measured surface overpressures, were: (1) Two Small-Pole Shelters, at 29 psi; (2) Three Wire-Catenary-Roofed Shelters, at 29 psi and 13 psi; (3) One aboveground A-Frame Pole Shelter, at 17 psi; (4) One Shored-Trench Stoop-In Shelter, at 13 psi; (5) Two Log-Covered Trench Shelters, at 13 psi; (6) Two Door-Covered Trench Shelters, at 5 psi and 3 psi. Earth arching increased the strength of the shelters that had an adequate depth of earth cover relative to the roof span.

A new design of quickly closable, expedient blast door was tested at 29, 17 and 13 psi surface overpressure ranges. Only the blast door at 17 psi was damaged, and even it remained intact and securely closed.

Also tested were two new designs of blast valves, both of which can protect against 100 psi overpressures and are closed in 1 to 2 milliseconds. One of these valves, the Overlapping-Flaps Blast Valve, requires only widely available materials and can be made in a few hours with common tools.

1. INTRODUCTION

1.1 THE INCREASING NEED FOR EXPEDIENT SHELTERS AFFORDING IMPROVED BLAST PROTECTION

The United States and most of the other nations with democratic governments have made only weak or token civil defense preparations to enable their civilians or their military personnel to survive a nuclear attack, and thus to lessen the risks of nuclear blackmail or attack. Yet the numbers of nuclear warheads that may possibly strike the United States and her probable allies continue to increase, as do the numbers of Americans and other democratic peoples likely to be within blast areas if nuclear war befalls their countries. Furthermore, existing structures within the probable target areas of these countries would provide much less effective blast protection than would well designed, thoroughly tested expedient shelters of types that a large fraction of civilian populations and most military personnel could build for themselves in 48 hours or less*--provided they were given the necessary leadership and building instructions during an escalating crisis.

National leaders are likely to have at least 48 hours' warning before the outbreak of nuclear war, since the steadily improving Soviet civil defense preparations** are based on the planned evacuation and dispersal of urban Russians during an escalating crisis. Soviet authorities estimate this evacuation and dispersal would reduce Russian fatalities in a nuclear war to a smaller number than the USSR suffered in World War II.** In the foreseeable future, no nation appears at all likely to launch an "out-of-the-blue" nuclear attack.

---

*See "Hasty Shelter Construction Studies," (U), by C. H. Kearny: Chapter 21 of Annual Progress Report, Civil Defense Research Project, March 1970-March 1971, ORNL-4679. (Such "hasty shelters" are now termed "expedient shelters.")

**See the ORNL translations of the most authoritative Soviet civil defense handbooks: Civil Defense, (Moscow, 1969), ORNL-tr-2306, (U), 1972, and Civil Defense, (Moscow, 1970), ORNL-tr-2656, (U), 1973.

Therefore, as part of even minimum-cost, low-profile civil defense preparations, improved designs of blast-protective expedient shelters should be developed and tested, and then practical shelter building instructions should be prepared and kept ready to distribute during a crisis.

1.2 SOME PRIOR BLAST TESTS OF EXPEDIENT-TYPE SHELTERS

We are aware of no previous testing of expedient shelters which involved closed-entrance shelters. However, information on the quite extensive blast testing of open-entrance expedient-type shelters is available. Small, open-entrance, earth-covered backyard shelters with wooden frames survived the Hiroshima and Nagasaki blasts and fire effects that destroyed all surrounding buildings. One such shelter at Nagasaki survived only 100 yards from ground zero.* At this close range the calculated overpressure was about 65 psi--too high an overpressure for occupants of an open-entrance small shelter to survive, and probably too high for this shelter to have survived if it had been closed with a blast door good for at least 65 psi.**

---

*See "Adequate Shelters and Quick Reaction to Warning: A Key to Civil Defense," (U), by Francis S. Lynch, in Science, index to Vol. 1 and 2, October-December, 1963.

**Shock tube tests and analyses at ORNL of small-scale models of small expedient shelters showed that an open small shelter made of green hardwood poles (tested yield stress about 8000 psi) "will survive some 50% more overpressure (22 psi) from 200-kiloton weapons than the same shelter with closed doors (15 psi)"--without including the blast protection provided by earth arching. Also ORNL studies demonstrated that up to 2 feet of earth cover is required over some small open shelters to eliminate the possibility, during the decay of external overpressure, of the greater overpressure inside such an open small shelter lifting the earth-covered shelter roof. See "Analysis of Effects of Nuclear Weapons Overpressures on Hasty Pole Shelter," by C. V. Chester and R. O. Chester, Chapter 13, Annual Progress Report, Civil Defense Research Project, ORNL-4784.

Open shelters of several types that could be built in less than 48 hours by average citizens having the necessary lumber and other common materials were subjected to nuclear blast effects in Nevada.* These tests demonstrated that most of these shelters can survive 10 to 15 psi overpressures. Consequential damage was confined to the entrance structures, and, in some cases, to the mounded dry earth cover, most of which was removed. The disadvantages of open shelters were recognized; A. P. Flynn* included as one of his final recommendations: "Future tests should include devices for reducing or keeping out the blast pressures."

Since entrance structures were damaged even in these Nevada tests in open desert, such structures would suffer more serious damage if shelters were located in wooded or urban areas where the blast winds would hurl many heavy objects against entrance structures and earth mounds. Furthermore, no shelters were built of green poles or logs--the most abundant material** with which many millions of unprepared Americans could build expedient shelters during an escalating crisis. Nor were these tested expedient shelters designed to take advantage of the blast protection that can be obtained from earth arching over and around shelters.

1.3 OVERALL OBJECTIVES OF THE ORNL TEST OF EXPEDIENT SHELTERS IN THE 500-TON TNT SURFACE DETONATION OF OPERATION MIXED COMPANY EVENT

1.3.1 To proof test in blast environments (ranging from predicted 30 psi down to 3 psi), six types of expedient shelters that were designed to afford good to excellent protection against radiation, blast, and

---

*See Operation Upshot-Knothole, (U), by J. B. Byrnes, WT-801, March-June 1953, Federal Civil Defense Administration; and Operation Buster, (U), WT-359 (Project 9.1a, F.C.D.A. Family Shelter Evaluation, by A. P. Flynn).

**See Appendix A for facts on the availability in all parts of the 48 states of growing trees as material for expedient shelters. Appendix A is an excerpt from a report by George A. Cristy, Expedient Shelters Survey, Final Report, July 1973, ORNL-4860.

fire and that can be made in two days or less by average rural Americans and/or military personnel using only widely available materials and hand tools, while guided only by illustrated, detailed written instructions.

1.3.2 To estimate the resistance to blast stresses provided by earth arching over below-ground expedient shelters, by comparing pairs of three types of these six expedient shelters. One shelter of each paired type was covered with a sufficient depth of earth estimated to result in effective earth arching, and the second shelter (at the same psi range) was covered with an estimated insufficient thickness of earth cover.

1.3.3 To prooftest a design of an expedient blast door that utilizes a quick tie-down against the negative pressure phase and enables shelter occupants to close and secure this blast door within about 4 seconds after seeing the very bright light from a large nuclear detonation.

1.3.4 To prooftest two new types of expedient blast valves at predicted 100 psi and 50 psi ranges.

1.3.5 To prooftest Yielding Foil Membrane Blast Gauges. (This gauge is a new type of nonelectrical, inexpensive, overpressure-measuring instrument designed to record fast-rising peak overpressures over a wide range.)

1.4 BACKGROUND OF THE ORNL EXPEDIENT SHELTERS TESTED IN OPERATION MIXED COMPANY EVENT

The six types of expedient shelters blast tested by ORNL in the Mixed Company Event are the six that we believe are the most practical to satisfy the objectives outlined in Subsection 1.3.1. One or more of these shelters are designed for use in each of the principal shelter environments of the United States: wooded areas, plains areas, areas with unstable soils, areas with very shallow soils or high water tables, and areas where no shelter roofing materials are available except those

that urban evacuees could bring with them. Only the Door-Covered Trench Shelter was tested as an open-structure. All the other shelters were tested as closed structures.

As part of civil defense research funded by the U.S. Atomic Energy Commission and conducted by the Civil Defense Research Project of the Oak Ridge National Laboratory (ORNL), prototypes of all these shelters had been designed, built, and partially evaluated prior to the Mixed Company blast effects testing. These six shelters are designed primarily to afford protection against the very heavy fallout likely to result from a massive attack on the United States and against the blast and initial radiation effects, over extensive areas, that would result from such an attack. Most of these shelters are improved versions of expedient shelters of the Soviet Union or of Israel--nations that make realistic and thorough preparations for the assured survival of most of their citizens. (See footnote on page 2 for Soviet civil defense sources.)

1.5 CORRELATIONS WITH DEFENSE NUCLEAR AGENCY REPORTS

This report (ORNL-4905) is being issued to serve as the Oak Ridge National Laboratory project officers' report to Defense Nuclear Agency: POR No. 6749, covering Project LN 316, Expedient Shelter Test, of Operation Mixed Company Event. Distribution of ORNL-4905 will be made to all facilities on the Mixed Company Distribution List, as well as to the usual recipients of ORNL civil defense publications.

2. TEST PROCEDURES IN THE 500-TON SURFACE DETONATION OF MIXED COMPANY

2.1 SHOT PARTICIPATION

ORNL was assigned an area extending from 420 feet (100 psi predicted overpressure) to 1900 feet (3 psi predicted) from ground zero (GZ), and lying between azimuth 99° and azimuth 113° from GZ.

A private contractor supplied all shelter materials and built the shelters. Each of the ORNL shelters was positioned with its length perpendicular to its azimuth from ground zero. Construction began on October 9, 1973. The 500-ton detonation took place near Grand Junction, Colorado, on November 13, and examination of all ORNL structures and restoration of sites was completed on November 21, 1973.

2.2 INSTRUMENTATION

2.2.1 Yielding Foil Membrane Blast Gauge. Because of insufficient funds to measure blast overpressures with conventional instruments, we developed and used a new type of nonelectrical, passive blast gauge designed to measure fast-rising peak overpressures. The details covering the design, calibration, accuracy (± 10%), and successful use of this inexpensive new blast gauge have been published in a separate ORNL report.* See Figure 2.1. Government facilities and defense contractors can obtain a copy of this report by writing to Civil Defense Research, Oak Ridge National Laboratory, P. O. Box X, Oak Ridge, Tennessee 37830.

2.2.2 Improvised Beam Deflection Gauge. Gauges like the one sketched in Figure 2.2 were used to measure the maximum and the permanent deflections of shelter roofs and of a blast door. The base that held the five fixed nails was nailed to the roof member, and the

---

*R. W. Manweiler, C. V. Chester and C. H. Kearny, Measurement of Shock Overpressures in Air by a Yielding Foil Membrane Blast Gauge, (U), ORNL-4868, September 1973, Oak Ridge National Laboratory, Oak Ridge, Tennessee.

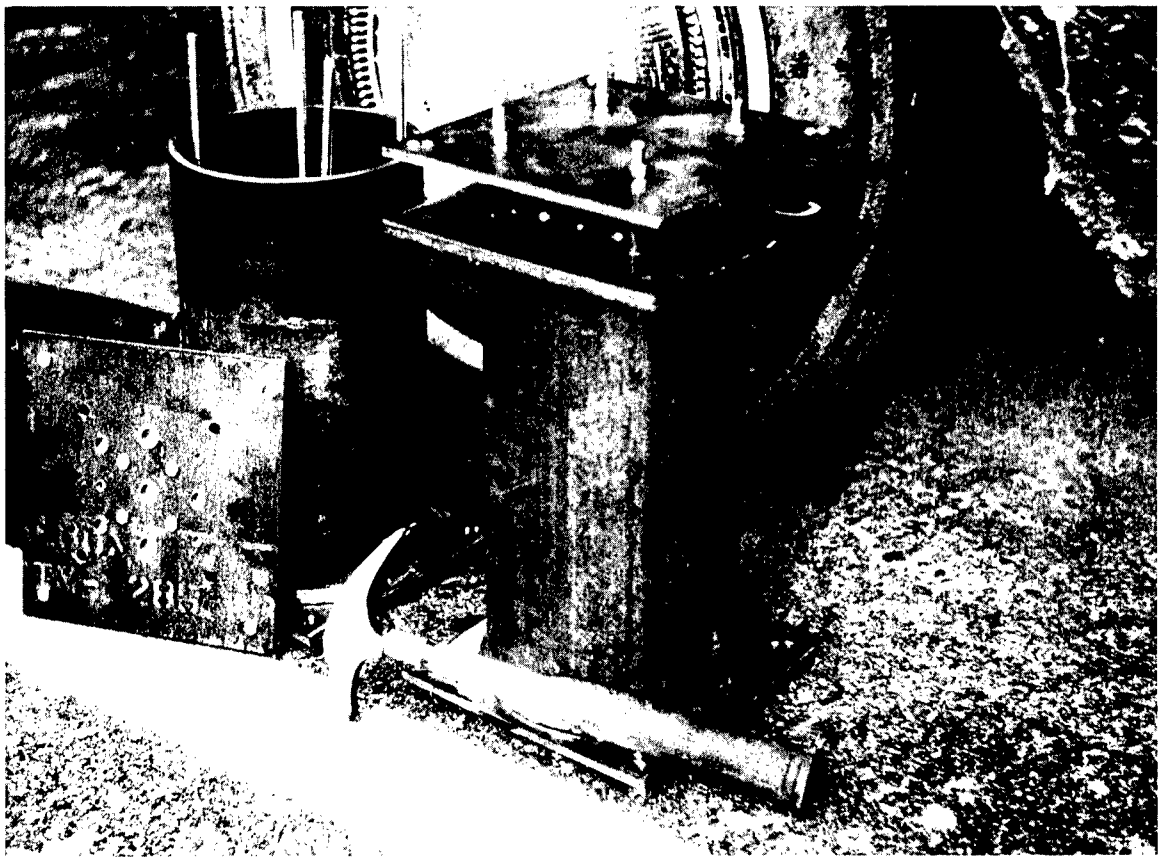

Figure 2.1 Yielding Foil Membrane Blast Gauges. An assembled and a partially dissembled gauge. Most gauges were set in the ground so that the middle rectangular plate was about one inch above ground level.

separate, 4-inch diameter can (with the strip of 0.005-inch-thick aluminum foil epoxied over a slot in its closed end) was positioned with its open end over the upper part of a vertical post. This post was fixed in the ground directly below the nails. The base of this rested on quite hard rock at the bottom of its hole. The can was nailed to the upper part of the post, at such a height that before the shot the longest fixed nail was almost touching the aluminum foil.

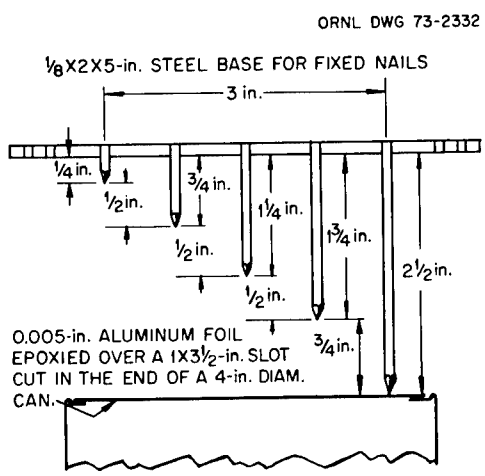

Figure 2.2 Improvised Beam Deflection Gauge.

After blast loading of the structural member has caused the nails to be forced downward and to puncture the foil, the maximum deflection and the permanent deflection can be readily obtained. To calculate the maximum deflection, one first notes the number of nail holes punched in the aluminum foil, and the diameter of the hole punched by the shortest nail. (When using this deflection gauge, we were able to determine maximum deflections with an accuracy ranging from 1/16 inch to 3/8 inch.) The permanent deflection can easily be observed (to an accuracy of 1/16 inch) by noting the depth of final penetration of the nails into the foil.

When this gauge is used to measure the deflections under severe blast loading of wooden shelters, typically most of its nails that puncture the foil make two to four puncture holes close together but recognizably separate. This indicates that short-span blast doors and roof beams oscillate violently, even if loaded with up to 2-1/2 feet of earth, when subjected to rapidly decaying blast overpressures having only about 150 milliseconds duration, as from this 500-ton TNT detonation.

3. SMALL-POLE SHELTERS

3.1 PURPOSE

The Small-Pole Shelter has been developed for construction by unskilled workers in wooded areas (in stable or unstable soils, below or above ground) to provide excellent protection against radiation and good protection against blast effects.

3.2 CONSTRUCTION

To compare ORNL's two Small-Pole Shelters (LN316-1A and LN316-1B, both made of fresh-cut lodgepole-pine poles) with one of the U.S. Army Engineer Waterways Experiment Station's half-scale Small-Pole Shelters made of dry, sawed, octagonal poles and proof-tested in this same blast as part of LN306, these two ORNL shelters were also built as half-scale models. Half-scale models scale approximately to the 10-kt design threat, as regards blast effects. Fresh-cut poles are stronger and more resilient than dry, sawed poles.* One of these ORNL shelters (LN316-1A; see Figures 3.1, 3.2 and 3.3) had the same overall dimensions as the LN306 shelter, which also was built at the predicted 30 psi range. To provide protection against the severe initial nuclear radiation from a 10-kt weapon at the 30 psi range, the entryway was made 6 feet long and the earth cover 2-1/2 feet deep in this half-scale model.

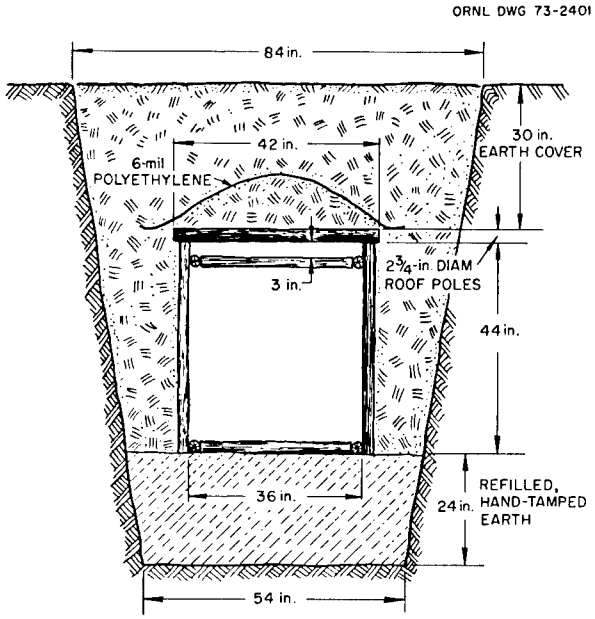

Figure 3.1 Vertical Section through Half-Scale Small-Pole Shelters LN316-1A and LN316-1B.

*See footnote (**) on page 3.

The main room of each ORNL Small-Pole shelter was 63 inches long and had 20 roof poles averaging 2-3/4 inches in diameter. However, the main room of LN316-1B had no entryway and had only 10 inches of compacted earth cover on its roof--an insufficient depth to result in very effective earth arching.

To test the practicality of what we believe to be design advantages over the LN306 version of a Small-Pole Shelter (which was designed to protect against the 10-kt initial nuclear radiation and blast threat at 30 psi range), the two ORNL shelters differed from the Army Engineer's LN306 Small-Pole Shelters as regards the following design features:

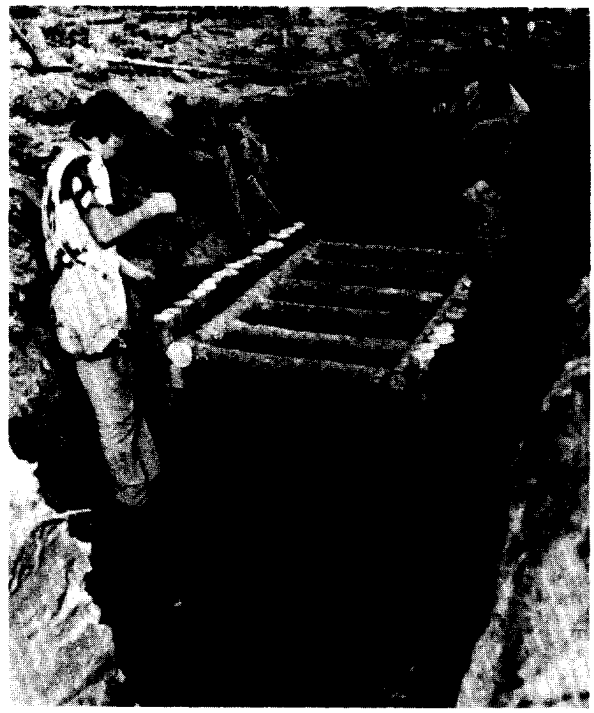

Figure 3.2 Frame and Side Walls of Half-Scale Small-Pole Shelter LN316-1A.

Figure 3.3 Building Frame of the 6-foot-long Entryway of Half-Scale Small-Pole Shelter LN316-1A.

3.2.1 In order to permit both of the ORNL shelters (except for the horizontal bracing on their floors) to be forced downward under blast loading stresses a few inches into the moderately soft, refilled, two feet of earth in the bottom of the excavation, no footing boards were placed under the wall poles (see Figures 3.1, 3.2, 3.4 and 3.5). Omitting the footing boards relieves downward pressure on the wall and roof poles when

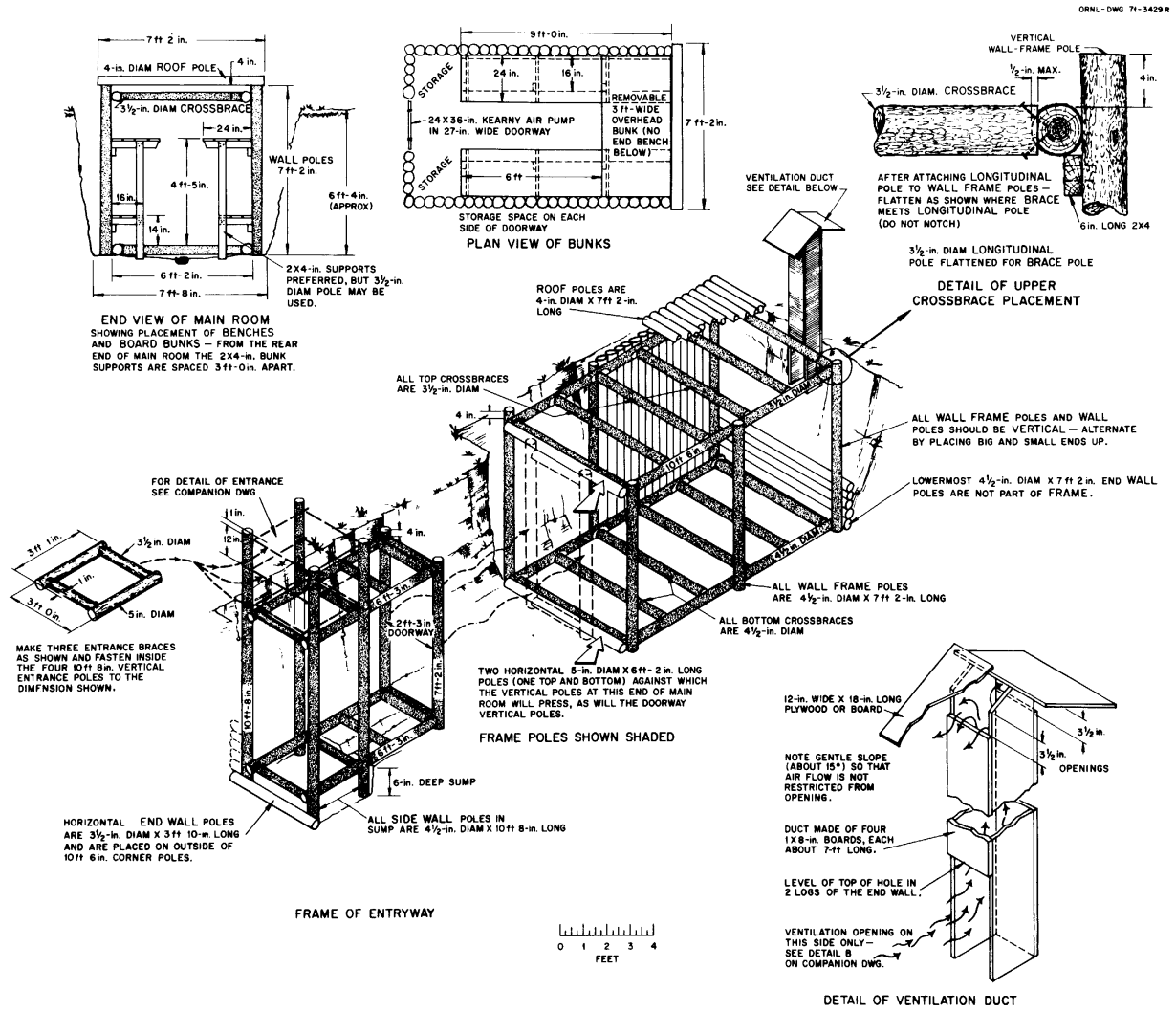

Figure 3.4 Pictorial View of Small-Pole Shelter, Dimensioned to Meet the Threat of 100-Kiloton or Larger Weapons.

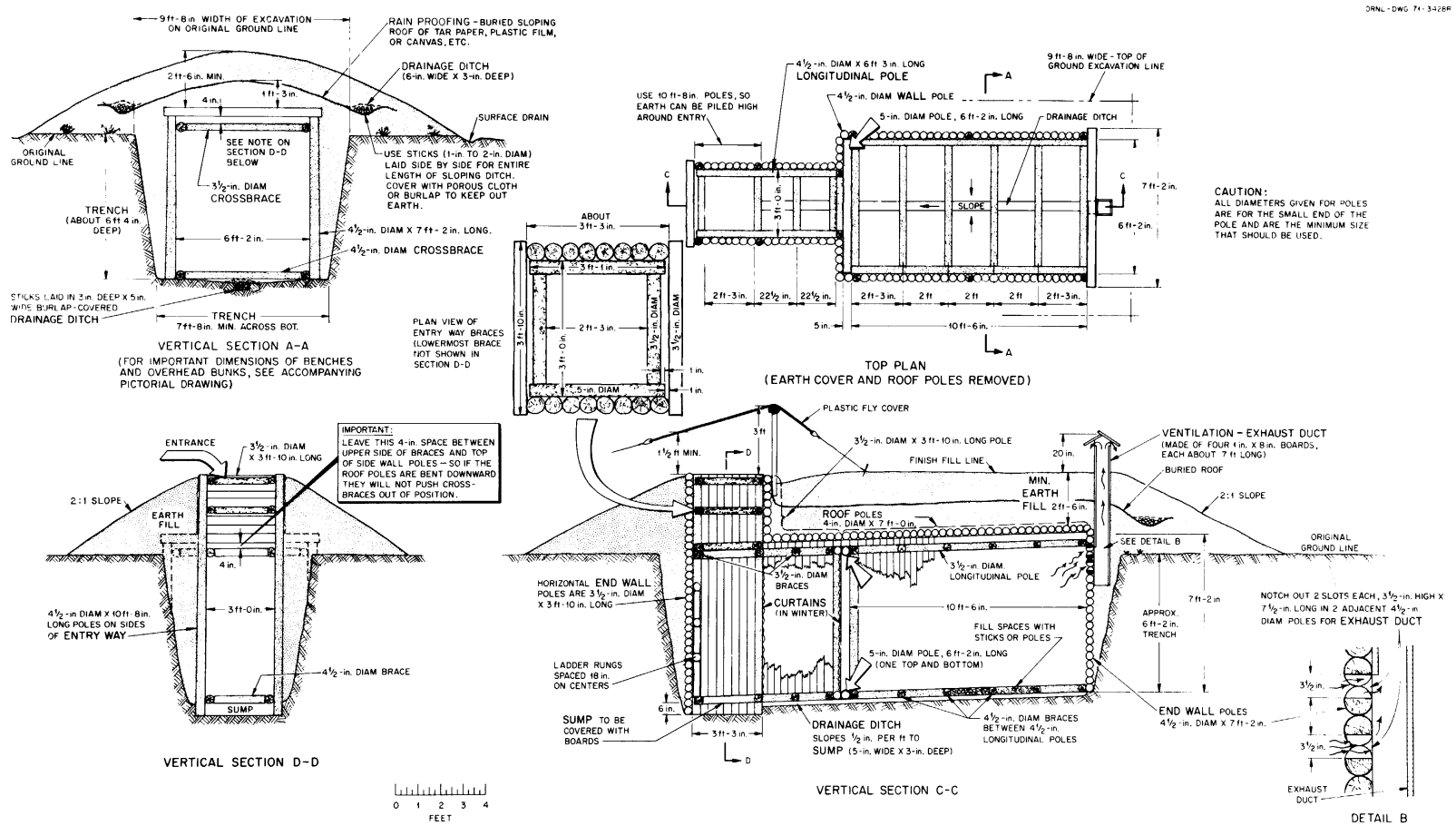

Figure 3.5 Plan and Elevation of Small-Pole Shelter Built With Minimum Cover. (This is not the LN316-1A shelter.)

they are blast loaded, provided the earth over the shelter roof and around its sides is capable of developing effective earth arching under blast loading.

3.2.3 To avoid complications that would result from the necessity of aligning the upper longitudinal poles of the frame with any straight, dimensioned 2 x 4-inch boards nailed to the vertical wall poles and used to support the upper longitudinal poles, only two small blocks were nailed to two vertical wall poles on each side to support each upper longitudinal pole of the two ORNL shelters. (An additional advantage to the above three modifications is that no dimensioned lumber is then required to build a Small-Pole Shelter.)

3.2.4 To blast test an improved design of vertical entryway (that is stronger and simpler to construct and requires fewer long poles than does the earlier entryway model used in the LN306 Small-Pole Shelters), ORNL LN316-1A had an entryway of the type shown in Figure 3.2--except that, for greater strength, four horizontal, rectangular entrance-braces were used in the upper part of the vertical entryway. These entrance braces were spaced 1, 6, 19 and 33 inches below the tops of the long vertical poles of the entryway.

3.2.5 These ORNL shelters were made without ventilation ducts, in anticipation of Small-Pole Shelters built for both fallout and blast protection having an entryway at each end. (This arrangement was later recommended in the After Action Report covering the building of 24-man Small-Pole Shelters by infantrymen who participated in Exercise Laboratory Shelter, of the XVIII Airborne Corps, at Fort Bragg on November 13 and 14, 1972.)

3.2.6 ORNL shelters LN316-1A and LN316-1B were both tested as closed shelters.

3.3 LOCATIONS AND TEST RESULTS

3.3.1 LN316-1A and LN316-1B. Both shelters were located within 20 feet of azimuth 110° from GZ, and 645 feet from GZ. Predicted overpressure at the surface was 30 psi; measured overpressure was 29.1 ± 2.5 psi.

3.3.2 LN316-1A. The blast compacted the wet earth around the entryway and its blast-protection frame, but we could observe no significant removal of earth by the blast wind. See Figure 3.6. The blast door (see Chapter 4) was undamaged. Inside the shelter, the most obvious result of the stresses caused by the blast was the squeezing together and slight inward bowing of almost all of the poles. See Figure 3.7. No poles were cracked or otherwise damaged. The centers of the roof poles had a maximum depression of 2-1/2 inches and a permanent depression of 2 inches relative to bedrock. The elastic recovery of the roof poles was 1/2 inch, and the permanent downward bowing of the roof poles amounted to a scant 1/2 inch. Thus the wall poles had been forced downward about 1-1/2 inches into the rather soft, refilled earth. The expedient blast door remained held tightly closed by its undamaged auto-tire hinges and bridle wires.

Figure 3.6 Photographer upside-down in Entryway of Half-Scale Small-Pole Shelter LN316-1A After the Blast. The fireball accompanying the 29 psi blast overpressure blackened the earth. The expedient blast door, the entryway, and the blast-protection frame of four notched-together logs were undamaged.

3.3.3 LN316-1B. The centers of the roof poles had a maximum depression of 3-1/2 inches and a permanent depression of 3 inches relative to bedrock. The elastic recovery of the roof poles was 1/2 inch, and the permanent downward bowing of the roof poles amounted to about 1/2 inch. Thus the wall poles had been forced downward about 2-1/2 inches into the rather soft, refilled earth on which they rested. The downward force of the roof poles against the tops of their supporting vertical wall poles had been appreciably greater than in LN316-1A; some of the bark of the wall poles had been broken at points of contact; but there was no significant damage to any of the poles in LN316-1B. See Figure 3.8. Especially interesting was the fact that the upper longitudinal poles and their crossbraces had not moved relative to the wall poles; they were much more tightly pressed together than before being subjected to the blast stresses.

Figure 3.7 Looking down the Horizontal Part of the Entryway into the Main Room of Half-Scale Small-Pole Shelter LN316-1A. Note the slight inward bowing of the wall poles. The vertical post extended down 2 feet through the refilled earth to bedrock; its top, before being sawed off, held the Beam Deflection Gauge.

3.4 CONCLUSIONS AND RECOMMENDATIONS

3.4.1 Closed Small-Pole Shelters of this design when built below ground level are capable of withstanding much more than 30 psi surface overpressures from nuclear weapons in the small kiloton range.

Figure 3.8 Detail of Small-Pole Shelter LN316-1B, showing wall poles, roof poles, longitudinal pole and two crossbraces after being subjected to 29 psi surface overpressure. Relative to bedrock, the whole shelter was permanently forced down 2-1/2 inches into the 2 feet of refilled earth on which it rested.

3.4.2 Calculations show that, even if built of fresh-cut poles, this shelter can withstand only about a 20 psi static load if it has no earth cover on its roof or has an earth cover that does not result in effective earth arching under blast loading. Therefore, it is prudent to classify full-scale models of this design that have roof poles averaging only about 5 inches in diameter and that receive no reinforcement from earth arching as 20 psi shelters, if they may be subjected to long-duration overpressures from explosions in the megaton range. However, if 3 feet or more of earth cover is provided, then in most areas consequential additional blast protection will result from earth arching.

If the opportunity arises, these shelters should be tested at 50, 70, and 100 psi.

3.4.3 In order for military personnel, in particular, to remain fully effective, whenever practical they should be protected from even relatively minor blast injuries such as ruptured eardrums. Therefore, it is desirable to equip shelters with expedient, quickly closable blast doors if located in an area likely to be subjected to blast.

4. EXPEDIENT QUICKLY CLOSABLE BLAST DOOR

4.1 PURPOSE

This expedient blast door is designed to:

4.1.1 Protect the occupants of a blast-resistant shelter from blast-wind and shock and from the accompanying contamination.

4.1.2 Enable occupants to use the entryway protected by this blast door as a large, low-resistance air duct (or ducts) until visual warning of a large detonation.

4.1.3 Enable occupants to close and secure this door within 4 seconds after seeing the bright light from a large detonation, thus preventing possible loss of the door due to its spring rebound after its downward bending by the peak overpressure, or to its being jerked off and carried away as a result of the negative pressure phase.

4.1.4 Secure the door closed throughout the negative phase, to prevent occupants from being subjected to sudden decompression and possible eardrum damage.

4.2 CONSTRUCTION

Figure 4.1 shows details of this expedient blast door, which was built to the illustrated size at the predicted 15 psi range, complete with the specified wire-bridle, load-binder tie-down, etc. This door closed a separate, 7-foot-deep vertical entryway made of green poles. This type of entryway is illustrated by Figure 4.1. The 2-inch, rough, ponderosa-pine boards used to build this door were full dimension. Therefore, the strength of this door was greater than the illustrated 10-psi design,*

---

*Dimensions of lumber, etc., were calculated by Holmes and Narver, Inc., acting as consultants to ORNL, so as to produce a balanced design in which all components should fail simultaneously under a megaton blast loading slightly larger than the maximum design loading.

ORNL DWG 73-1063A

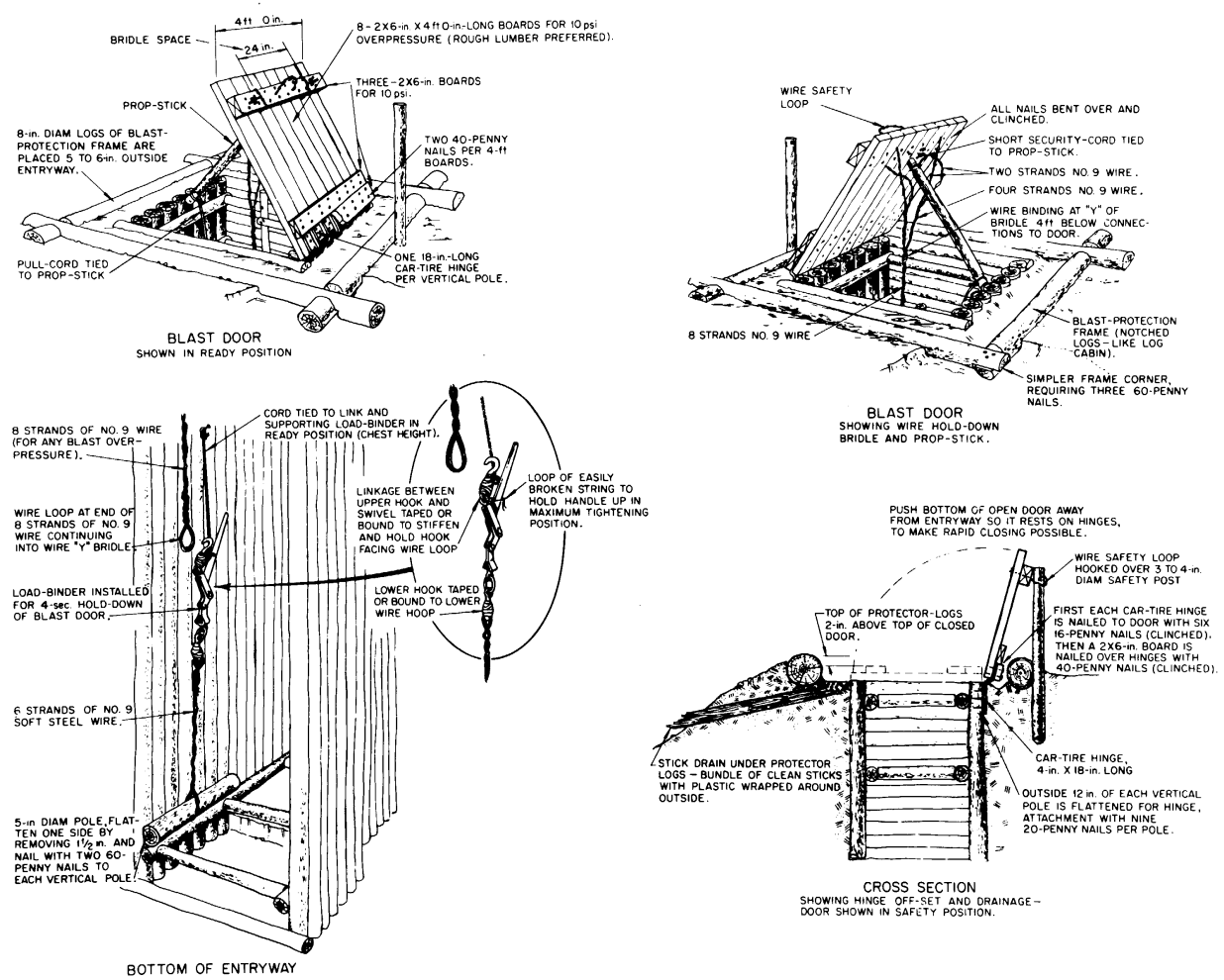

Figure 4.1 Expedient Quickly Closable Blast Door, as Used for Small-Pole Shelter.

which is based on the use of nominal "2-inch" (actually 1-1/2 inch thick) finished boards. Consequently, this door made of rough boards was tested at the predicted 15 psi range.

4.3 LOCATIONS AND TEST RESULTS

4.3.1 Expedient blast door LN316-6 was located on azimuth 100°, 840 feet from GZ. The predicted overpressure was 15 psi; the measured, 16.7 ± 1.5 psi. The two center boards were badly cracked in their middles, but were not broken. No other damage resulted. The surrounding wet earth was compacted by the blast, but was not blown away.

The deflection gauge under the center of the door recorded at least four oscillations of the door; the longest nail of the gauge had punched four holes in the fixed aluminum foil. The maximum vertical deflection of the center of the door was 1-3/4 inches; the permanent deflection, about 3/4 inch.

After the test, the door was still held closed so tightly that it could not be opened even a fraction of an inch by hand. The pressure recorded inside this separate vertical entryway (that had a volume of only 63 cubic feet) was no more than 4 psi.

4.3.2 A half-scale expedient blast door was tested closing the entryway of Small-Pole Shelter LN316-1. See Figure 3.6. This door was built of 2-inch, rough, ponderosa-pine boards--equivalent to 4-inch planks full scale. As expected, it withstood 29 psi undamaged, as did the entryway.

4.3.3 A full-scale expedient blast door, also made of 2-inch rough ponderosa-pine boards, closing the vertical entryway of Shelter LN316-2, was undamaged by 12.6 ± 1.0 psi outside overpressure.

4.4 CONCLUSIONS AND RECOMMENDATIONS

4.4.1 This type of expedient blast door is practical.

4.4.2 If a blast-resistant expedient shelter is built in an area where it is likely to be subjected to blast dangers, it should be equipped with expedient quickly closable blast doors--provided that time and materials are available after the completion of the shelter itself.

4.4.3 A similar but stronger expedient blast door built of green poles should be developed and blast tested.

4.4.4 The blast-protection frames around these three blast doors (each made of four logs or railroad ties, with their upper sides about 2 inches higher than the closed door) prevented the doors from being hit directly by the blast wind and reflected shock overpressures. If these blast doors and their entryways had been subjected to nuclear blast effects in an area where trees or debris from buildings had been carried by the blast wind, then blast-protection frames would have protected the doors from most heavy, blast-hurled objects such as these.

4.4.5 Fuel air explosive (FAE) weapons* are likely to become important conventional weapons. In this event, quickly closable blast doors--of both horizontal and vertical types--will become essential components of bunkers and other field fortifications capable of effectively protecting personnel in rear areas where there is little danger of the enemy gaining fire superiority and/or overrunning bunkers while all of their openings are closed.

---

*Clarence A. Robinson, Jr., "Special Report: Fuel Air Explosives--Services Ready Joint Development Plan," (U), Aviation Week & Space Technology, February 19, 1973.

5. WIRE-CATENARY-ROOFED SHELTERS

5.1 PURPOSE

This shelter is intended for use in areas with deep, stable earth, especially where, as on the plains, wire and fence posts are often the most available building materials. In such areas, a Wire-Catenary-Roofed Shelter (see Figures 5.1 and 5.2) affords excellent protection against radiation and blast, and requires minimum quantities of low-cost materials.

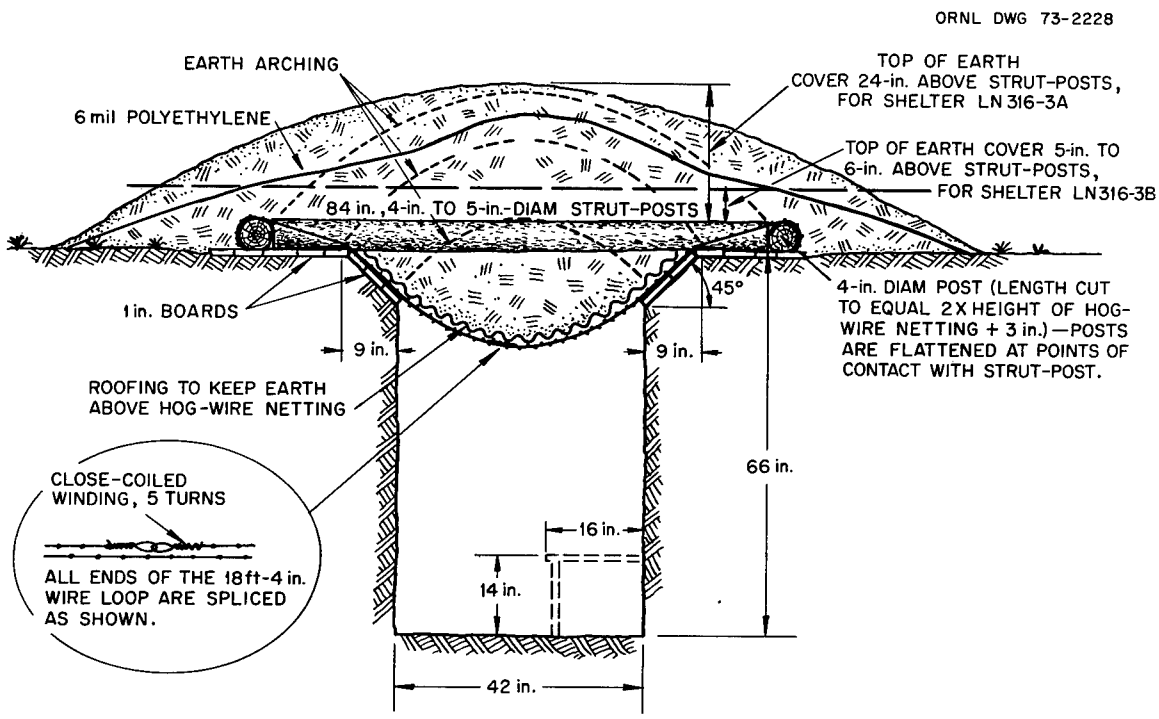

Figure 5.1 Wire-Catenary-Roofed Shelter.

5.2 CONSTRUCTION

As indicated by Figures 5.1 and 5.2, the most readily constructed version of a Wire-Catenary-Roofed Shelter is a stoop-in shelter utilizing a trench 66 inches deep and 42 inches wide. This is deep and wide

Figure 5.2 Toe-Nailing a Strut-Post of a Wire-Catenary-Roofed Shelter. The wire is a loop made of hog-wire fencing, 18 feet-4 inches in circumference.* This loop goes around posts parallel to the trench on its two sides. Both sides of this wire loop were pushed down into the trench to form the "catenary" before the strut-posts were positioned at two-foot intervals.

---

*Loop circumference = 2(W + W/6) + 1/2 (average circumference of the two encircled posts), where W = width of the completed post frame. (This formula applies only to shelters with trench width about half the length of their strut-posts.)

enough to enable even big men to sit erect, side by side, on the bench in a completed shelter. The 4-foot-long entryway trench is best made about 24 inches wide, with one of its walls being an extension of the main trench wall opposite the bench for the occupants.

Each of the ORNL shelters tested in Mixed Company had only one opening. Longer versions of all the ORNL shelters should have an entryway at each end, to provide for adequate cooling-ventilation. And in hot weather, even small shelters should have both an entryway at one end and a combined crawlway exit-ventilation duct at the other end.

The forces produced by earth and blast loading on the roofing wires and the posts around which the wires are looped can be resolved into two sets of components: vertical components that are carried by the unexcavated earth forming the sides of the trench, and horizontal components that would move the wire-encircled posts toward the trench if it were not for the strut-posts acting as compressive members to resist these horizontal forces.

The wire "catenary" of each of the three tested shelters was covered with thin aluminum roofing to keep earth from falling through the wire mesh. (Rugs or canvas would have served.) Then the earth cover was put on in layers about 9 inches thick. The layers beneath and around the strut-posts were well tamped to reduce compaction of this earth under blast loading and resultant bending of strut-posts.

Two full-scale, paired shelters were built, LN316-3A and LN316-3B. Each had a main roomlet 13 feet, 2 inches long (equals four widths of 38-inch-wide wire netting, plus 6 inches to avoid overlapping of the wire loops). For comparison of earth arching effects, one shelter (LN316-3A) had a full earth cover (see Figure 5.1), and the other shelter (LN316-3B) had earth only 6 to 8 inches deep over its strut-posts--a depth estimated before these blast tests as being insufficient to result in very effective earth arching. In each shelter, two loops of hog wire netting encircled a frame made of dry, brittle cedar posts, and two loops encircled a frame made of green lodgepole pine posts. Based on the actual ultimate strength of this wire, these wire-catenary roofs should have been broken by a 10 psi overpressure of sufficient duration,

provided there was no earth arching. All frame posts were 3-1/2 to 5 inches in diameter at their small ends.

A half-scale model was made with its wire loop made weaker by first removing the strong top and bottom wires of the same hog netting. Figure 5.3 shows the end of the roof next to the entryway trench (in which the man is standing) being closed with posts stacked vertically in a 4-inch-wide trench dug the same length as the width of the post frame. This wall of stacked posts held the full-thickness earth cover in the entryway end of the roof.

All three of these shelters were tested closed.

Figure 5.3 Stacking "Posts" to Hold Earth Cover in the End of Half-Scale Wire-Catenary-Roofed Shelter LN316-9.

5.3 LOCATION AND TEST RESULTS

5.3.1 The paired shelters LN316-3A and LN316-3B were located within 20 feet of azimuth 113°, 1000 feet from GZ. The predicted overpressure was 10 psi; the measured overpressure was about 13 psi. Not allowing for soil arching, the calculated ultimate strength of the wire roofs of these shelters was 10 psi.

Neither of these closed shelters was consequentially damaged. The shock wave shook only very little earth from the trench walls, as is indicated in Figure 5.4 by the insignificant amount of fallen earth on the black plastic. Only after the earth cover was removed from around the frame posts was any damaged noted: one of the brittle cedar

strut-posts was found to be broken in two where its diameter suddenly changed (because of branching) from 5 inches to 3-1/2 inches. However, the packed earth around this strut-post held the broken ends together so that it obviously continued to function effectively as a compression member of the frame.

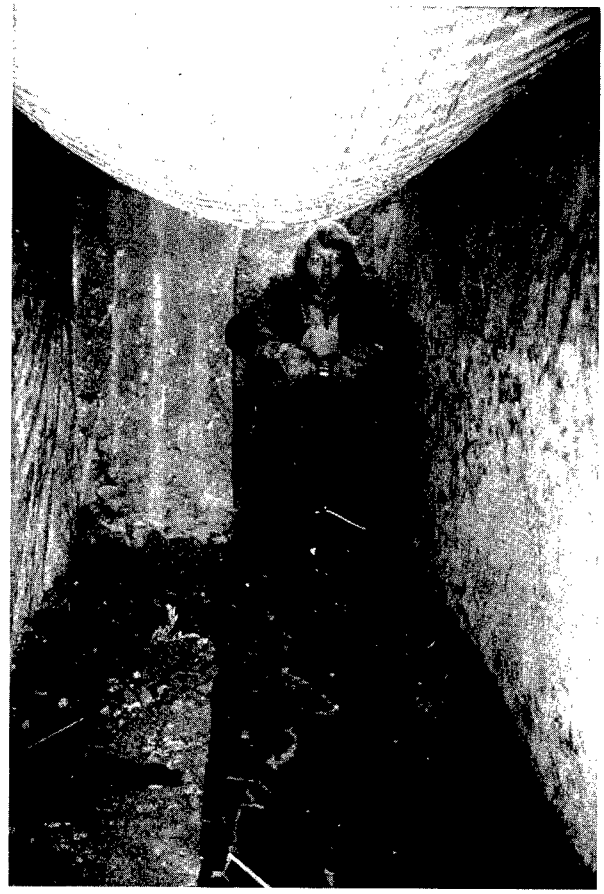

Figure 5.4 Shelter LN316-3A After Withstanding an Outside Overpressure of About 13 psi. The loaded wire-catenary roof exerted an outward pressure against both trench walls, increasing their stability.

No doubt the short duration of overpressures high enough to severely stress LN316-3B, combined with some earth arching in the "inadequate" earth covering of this shelter, caused the permanent downward deformation of its roof to be less than anticipated. As shown by Figure 5.1, the depth of earth in which arching could occur in LN316-3B is the vertical distance from the bottom of a 45° slope of unexcavated earth on which the roof wire rests, up to the top of the earth cover--about 21 inches. Apparently, in the sandy earth of the Mixed Company test site if the ratio of the effective depth of the earth cover to the effective free span of the earth arch is 1/2 (21 in./42 in.), then effective arching will result under blast loading.

The following permanent downward deformations were measured along the center lines of the wire-catenary roofs:

	6 in. from entryway end	At center	6 in. from the undisturbed earth of the far end
LN316-3A	3/4"	1/2"	0"
LN316-3B	1-3/4"	1-1/2"	1/2"

Earth arching of fully covered LN316-3A obviously reduced the stresses due to blast loading on its wire-catenary roof, and the resultant deformations. Also, the duration of the higher overpressures from this 500-ton TNT shot, which was short compared with the response time of the roof, no doubt resulted in the roof that had the full earth cover absorbing more of the high overpressure energy as it was compacted by the blast overpressure. Furthermore, this full cover of earth required a greater fraction of the high overpressure energy to accelerate it and move it downward sufficiently so that this earth could force the wire roofing downward.

These shelters, like all the other ORNL shelters, remained dry inside (except in some entryways) throughout the 5 weeks of abnormally wet weather between their construction and demolition. This success constituted additional proof of the effectiveness of their "buried roofs" of 6-mil polyethylene, which sloped to both sides and deflected downward percolating water.

5.3.2 Half-Scale Wire-Catenary-Roofed Shelter LN316-9 was located on azimuth 99°, 645 feet from GZ. Predicted overpressure was 30 psi; measured overpressure (at the same distance from GZ, but on azimuth 110°) was 29.1 ± 2.5 psi.

The blast overpressure further compacted the damp earth mounded over LN316-9, but, rather surprisingly, the blast wind removed very little of the wet earth from its mounded covering. The trench walls (which except for the uppermost 12 inches of sandy soil were of an earth that verged on a soft argillaceous sandstone) remained essentially unchanged. The center part of the wire "catenary" was depressed only about 1/4 inch relative to the "bedrock" floor of the shelter roomlet--indicating that very effective earth arching* supported most of the surface load of about 29 psi overpressure. See Figure 5.1.

---

*For information on the advantages of earth arching, that has been inadequately utilized by the designers of shelters, see: (1) Proceedings of the Symposium on Soil-Structure Interaction, (U), University of Arizona Engineering Research Laboratory, Tuscon, Arizona, September 1964;

The calculated ultimate strength of this wire-catenary roof, based on ORNL Materials Lab tests of the wire, was only 15 psi--if no allowance is made for the strengthening due to earth arching.

5.4 CONCLUSIONS AND RECOMMENDATIONS

5.4.1 If properly constructed in stable earth, a Wire-Catenary-Roofed Shelter affords good to excellent protection against blast, largely due to the development of effective earth arching in its advantageously designed earth cover.

5.4.2 Since in most stable soils a closed Wire-Catenary-Roofed Shelter probably can withstand a 50 to 100 psi outside overpresure, an unsolved problem is how to build an adequately strong expedient entryway and blast door. A promising solution is a vertical entryway similar to that of Small-Pole Shelter LN316-1A, with a 2 ft. x 2 ft. opening with an expedient blast door made of 2- x 6-in. lumber, or stout green poles joined together side by side.

---

and (2) S. K. Takahashi, Effect of Backpacking and Internal Pressurization of Stresses Transmitted to Buried Cylinders, Technical Report 789, Naval Civil Engineering Laboratory, Port Huenena, CA 93043, May 1973, DNA 13.01.

We use the term "earth arching" instead of "soil arching" to avoid misleading some nonengineering citizens into using exclusively soil ("the surface layer of earth, supporting plant life"--Webster) to cover their shelters. Not even engineers talk about "soil moving contractors."

6. SHORED-TRENCH STOOP-IN SHELTER

6.1 PURPOSE

This shelter (LN316-2) was an improved version of an Israeli expedient shelter. It is designed to be built in unstable earth, such as sand. Its cross-sectioned dimensions are also about the same as those of the covered trench shelters used so successfully in the London Blitz--even for workers to sleep in night after night while sitting up. See Figures 6.1 and 6.3.

6.2 CONSTRUCTION

Figure 6.1 gives the details of this easy-to-build, balanced* shelter, which requires minimum earth moving for each occupant and affords excellent fallout protection and good blast protection. Only widely available sizes of lumber are required; a pair of two-by-fours can be nailed together and used in place of the specified four-by-fours; 3/4-inch plywood can be used in place of the 1-inch board shoring, etc.

To limit the load on the shoring to the horizontal pressures of the earth pressing against it, the 6-foot-long, 2-inches-thick roofing boards rested only on the packed earth outside the shoring, and not on shoring boards. See Cross-Section B-B of Figure 6.1.

To simulate construction in a loose sand, the evacuation was made over 8 feet wide at ground level. The backfill was tamped by hand (see Figure 6.2) in layers until this sandy soil was about 1-1/2 inches <u>above</u> the tops of the shoring.

---

*The sizes of all boards were calculated by Holmes and Narver, Inc., acting as a consultant to ORNL, so that in unstable earth all components would fail simultaneously when subjected to 10 psi blast overpressure from a megaton weapon. Holmes and Narver made the usual very conservative engineering assumptions, which excluded the possibility of strengthening due to earth arching.

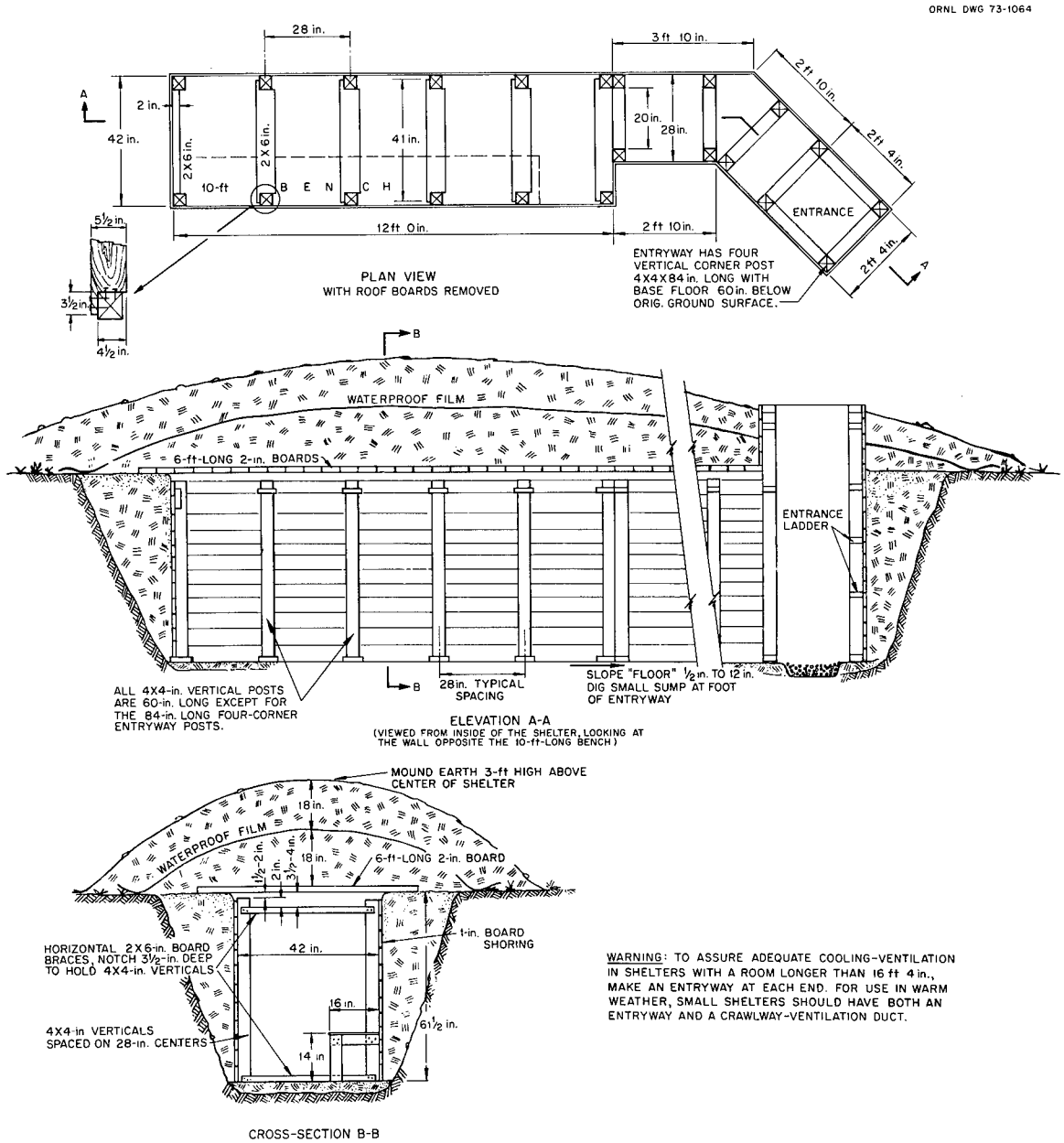

Figure 6.1 Shored-Trench Stoop-In Shelter.

The 28-inch spacings of the vertical four-by-fours of the shoring leave room for a large man to sit comfortably between each pair, with ample leg room.

The expedient blast door (see Section 3) was made of full-dimension, rough-pine boards. It measured 28 x 32 inches. Its blast-protection frame was made of four logs, each 6 to 8 inches in diameter, cut to half diameters at their ends so as to overlap. Each corner of this frame was spiked with three 60-penny nails.

Figure 6.2 Tamping the Sandy-Earth Backfill of the Shored-Trench Stoop-In Shelter. When the backfilled earth was 1-1/2 inches above the tops of the shoring boards, the 6-foot roofing boards were laid directly on this earth surface.

6.3 LOCATION AND TEST RESULTS

The shelter was built on azimuth 110°, 1000 feet from GZ. The predicted overpressure was 10 psi; the measured overpressure was 12.6 ± 1.0 psi.

The only observed results of the blast on this shelter were: (1) compaction of the earth cover; (2) a measured maximum deflection of 1-1/4 inches at the center of the board roofs; (3) a permanent lowering of the roof boards of about 1 inch, due mostly to the compaction of the backfilled earth on which the roof boards rested (see Figure 6.3); (4) a measured

Figure 6.3 Undamaged Shored-Trench Stoop-In Shelter After Withstanding Over 12 psi Overpressure. The center post supported the beam deflection gauge.

overpressure inside this closed shelter of about 3 psi. Most of this inside overpressure probably was due to the sudden lowering of the roof under the blast loading.

6.4 CONCLUSIONS AND RECOMMENDATIONS

6.4.1 Provided sufficient lumber is available, the Shored-Trench Stoop-In Shelter could be built by many untrained Americans using only hand tools and guided only by well-illustrated, detailed, written instructions.

6.4.2 This design is based on the use of finished lumber (a 2-inch board is actually only 1-1/2 inches thick) and makes no allowance for earth arching. Since the rough boards used were full dimensioned and effective earth arching was certain to result, this shelter should have been blast tested at the 20 psi predicted range.

6.4.3 Since this shelter requires only about 100 board feet of widely available lumber per occupant, during a slowly escalating crisis large numbers could be prefabricated at modest cost as unassembled packages of boards, and kept ready for rapid installation when and where desired, especially in sand or other unstable earth.

7. LOG-COVERED TRENCH SHELTER

7.1 PURPOSE

This simple, strong-roofed shelter is one that average untrained citizens in wooded areas with deep, stable soils can build for themselves within two days, provided they have the few necessary hand tools and building instructions. Figure 7.1 shows a cross-section through this shelter when built with almost the specified minimum length and diameters of "logs"--fresh-cut green poles 4-1/4 to 5 inches in diameter and 7 feet long--used to roof the two ORNL Mixed Company shelters of this type.

An advantage of Log-Covered Trench Shelters built with larger diameter, longer logs than the illustrated minimum-sized "logs" used in these two Mixed Company shelters is that they can be built in a day or two to provide good fallout and blast protection. Then, after "completion" the occupants can enlarge their shelter even while fallout conditions outside prevent their spending much time outdoors. This advantage is especially practical if the shelter is built in or close to the woods where the logs are cut and where the builders can use roof logs 6 to 9 inches in diameter and 9 or 10 feet long. Thus they can provide the opportunity for later enlarging their completed shelter to a width of about 6 feet. (Such a shelter, built in stable clay three years

ORNL DWG 73-2330A

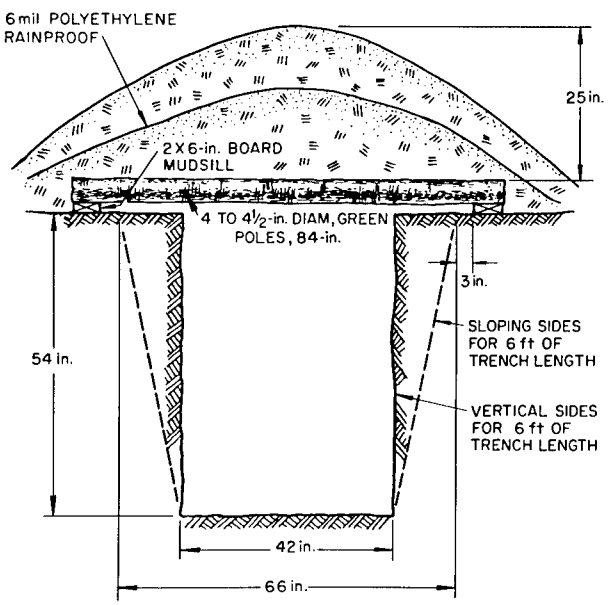

Figure 7.1 Log-Covered Trench Shelter LN316-9A. Note the mudsills under the ends of the minimum-sized roof "logs".

ago near Oak Ridge with 9-foot roof logs, was later widened to 6 feet in stable clay soil, and is still serviceable.)

7.2 CONSTRUCTION

Two shelters (LN316-4A and LN316-4B) were built with the illustrated cross-sectional dimensions and minimum-size roof "logs". Each had a main roomlet 12 feet long and an offset entryway trench 2 feet wide and 4 feet long--the same as the entryway pictured in Figure 5.2. Furthermore, each had half of the sides of its main trench vertical, and half sloped upward on each side to the inner edges of the 2" x 6" board mudsills that supported the roof logs near their ends. See Figure 7.2. (A workmen's error resulted in these sloped sides being dug back this far; the sloped sides should have been sloped upward so as to intersect the ground surface about 3 inches from the inner sides of the mudsills.)

To obtain another measure of the effectiveness of earth arching, one of these shelters (LN316-4A) had the full earth cover shown in Figure 7.1. The earth was mounded 25 inches above the tops of the roof "logs", as measured after its compaction by the blast overpressures. The other shelter (LN316-4B) had the top of its blast-compacted earth cover only 8 inches above the roof "logs".

7.3 LOCATIONS AND TEST RESULTS

These two shelters were located within 20 feet of azimuth 107° from GZ, and 1,000 feet from GZ. The predicted overpressure was 10 psi; the measured overpressure was 12.6 ± 1.0 psi.

Neither of these closed shelters was damaged in any way. To our surprise, only insignificant amounts of earth were shaken off either the vertical or sloping parts of the unsupported earth sides of either shelter. Figure 7.2 shows the condition of parts of the vertical and sloping sides of LN316-4B after the blast. Note that a little earth had been pressed off from beneath the inner lower edge of the 2" x 6" mudsill;

Figure 7.2 Undamaged Vertical and Sloped Earth Sides of Log-Covered Trench Shelter LN316-4B; Shown After Withstanding 12 psi Overpressure Effects.

this very slight caving probably would not have occurred if the inward-sloping side had been started a few inches from the inner edge of the mudsill. The two 2" x 6" mudsill boards extended under the roof poles of the vertical-sided part of this shelter, thus preventing the roof poles from pressing against the relatively unstable earth near the tops of the vertical earth sides.

Beam deflection gauges recorded the following deflections in the centers of 5-inch diameter roof poles of these two closed shelters:

	Maximum Deflection	Permanent Deflection	Elastic Recovery
LN316-4A (25 in. earth cover)	1-3/8"	3/4"	5/8"
LN316-4B (8 in. earth cover)	7/8"	1/16"	13/16"

Surprisingly, the shelter roof with much less earth cover was deflected less under blast loading! Even in the case of LN316-4A, the depth of its full earth cover (25 in.) relative to the length of the free span between the mudsills (72 in.) was too small--a ratio of only about 1/3--to result in effective earth arching.

7.4 CONCLUSIONS AND RECOMMENDATIONS

7.4.1 Log-Covered Trench Shelters built in stable earth and roofed with fresh-cut green logs afford much higher blast protection--even when closed--than the usual conservative calculations indicate.

7.4.2 Log-Covered Trench Shelters only about 42 inches wide should be tested, both closed and open, at much higher blast overpressues than 12 psi.

8. A-FRAME POLE SHELTER

8.1 PURPOSE

This shelter is designed to be built by average citizens in wooded areas where the water table is too high and/or the depth to rock is too shallow to permit them to construct a below-ground expedient shelter within 48 hours. An A-frame is an inherently stable and strong structure. This shelter is designed to give fair to good fallout protection, and good blast protection--especially if built of green, fresh-cut poles.

An A-Frame Pole Shelter is somewhat easier to build than a Small-Pole Shelter, and, when both are built above ground, the A-frame shelter requires fewer cubic feet of earth cover for each occupant to achieve the same protection against fallout radiation.

8.2 CONSTRUCTION

The sides of half-scale test model LN316-10 (see Figure 8.1) were made of green lodgepole-pine poles 3-1/2 feet long, averaging 2-1/2 inches in diameter.* The crawlway entryway was horizontal and consisted of a half-scale Small-Pole Shelter 5-1/2 feet long, 18" x 18" on the inside. It was closed by a vertical expedient blast door (which faced away from GZ) made of rough full-dimensioned 1" x 8" lodgepole-pine boards. The entryway was covered with 12 to 18 inches of soil. (A horizontal entryway was found to be more difficult to construct, cover, and use than the vertical entryway we had made for aboveground shelters built in other areas.)

The side slopes of the earth cover were made steeper than is desirable in many soils (1-1/2' to 1') in order to minimize the volume of

---

*For a description of a full-scale model of this shelter, but with a vertical, more practical entryway like that of the Small-Pole Shelter, see "Hasty Shelter Construction Studies," (U), by C. H. Kearny, Annual Progress Report, Civil Defense Research Project, March 1970-March 1971, ORNL-4679.

shielding earth which must be moved. (Whether or not average Americans using only hand tools can build and cover a full-scale model with 2 feet of earth over its top, within 48 hours of beginning work, is an untested question.) This shelter was covered on October 24, 1973 when the sandy loam topsoil was damp and could be packed well when stamped on.

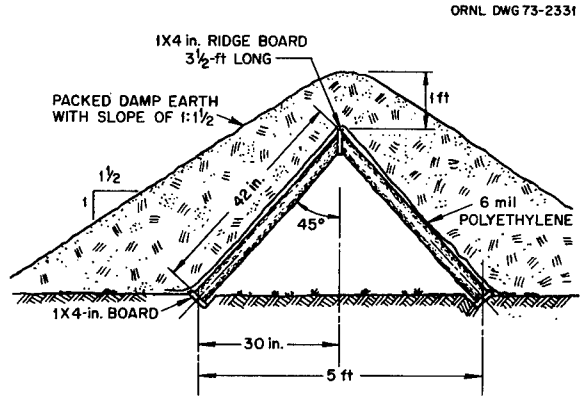

Figure 8.1 Half-Scale A-Frame Pole Shelter. A full-scale 7-feet model would have a main-floor area of about 65 sq. ft.

Since in some Nevada tests the blast winds removed much of the dry shielding earth which was mounded steeply over small shelters, we experimented with a possible means of minimizing such removal of earth. Half of the side facing GZ was covered with a piece of canvas. See Figure 8.2. The

Figure 8.2 Half-Scale A-Frame Pole Shelter With the End Opposite Its Entryway Removed, After Withstanding about 16 psi Overpressure Effects.

lower edge of this canvas was buried in a 6-inch-deep trench, and the rest of this canvas was covered with about 3 inches of packed soil.

8.3 LOCATION AND TEST RESULTS

The shelter was on azimuth 100°, 840 feet from GZ. The predicted overpressure was 15 psi; the overpressure measured at the same range from GZ and 140 feet away was 16.7 ± 1.5 psi.

Except for compacting the wet sandy soil over and around LN316-10, the blast produced scarcely noticeable effects. Only a small fraction of the wet soil on top of the undisturbed piece of canvas was blown off. The interior dimensions remained essentially unchanged--contrary to the opinions of some engineers that an earth-covered A-frame shelter resting essentially on the surface of the ground and with no tension members to prevent outward spreading would be at least somewhat flattened and widened by blast overpressure.

Due to an oversight in not setting two pointer stakes in line with this shelter's ridgeboard and outside the area from which soil was shoveled to cover this shelter, the men covering this small shelter lost track of exactly where the buried shelter was located, and as a result inadvertently placed much more earth cover on the side facing GZ than on the opposite side. Before the Figure 8.2 photograph was taken, the earth and the almost vertical poles that closed one end had been carefully removed. However, in spite of the asymmetry of the soil cover, earth arching apparently was effective.

8.4 CONCLUSIONS AND RECOMMENDATIONS

8.4.1 An A-Frame Pole Shelter affords even better protection against overpressure and blast wind effects than calculations indicate.

8.4.2 Further blast testing, and at much higher overpressures than 16 psi, is desirable.

9. DOOR-COVERED TRENCH SHELTER

9.1 PURPOSE

This shelter can be built quickly by people who need protection in an area with stable soil, but whose only building materials are some interior doors. For example, families might be evacuating San Diego, California, and planning to build shelters for themselves in one of the officially designated reception areas. San Diego's essentially treeless reception areas have stable soil and nearby water from wells, but have very little locally available materials with which to roof large numbers of trench shelters. Some families with station wagons could carry enough of their interior doors to roof narrow trench shelters to be covered with 2 feet of earth, and thus provide good fallout protection.

Our prior tests of dry, hollow-core interior doors used to span a 42-inch "trench" had shown that a single door often breaks after being bowed downward a little over an inch as a result of being loaded with 3 feet of sacked earth stacked only over the 42-inch, free-span center part. (This loading minimizes strengthening due to earth arching.) Therefore, these two weak-roofed shelters were blast tested as open shelters.

9.2 CONSTRUCTION

Two identical Door-Covered Trench Shelters (LN316-5A and LN316-5B) were built in earth that is very stable except for the uppermost foot of sandy loam. Each shelter had the cross-section illustrated in Figure 9.1 and had a 2-foot-wide, 4-1/2-foot-long, offset entryway trench partly covered with a 30-inch-wide, hollow-core interior door. A 7-foot length of each of the two 10-foot-long main trenches was covered with a double thickness of ordinary hollow-core interior doors (three pairs of 30-inch-wide doors). Double thicknesses of doors were used because wet weather was anticipated, and water can severely weaken hollow-core interior doors.

The pairs of doors were laid directly on the surface of the ground, with their 6-foot, 6-inch lengths perpendicular to the length of the 42-inch-wide trench. All the doors were used doors, but were in good condition. To compare this roofing of doors with a stronger roofing over the same width trench, the end three feet of each 10-foot trench was covered with 6-foot lengths of 2-inch, rough pine boards.

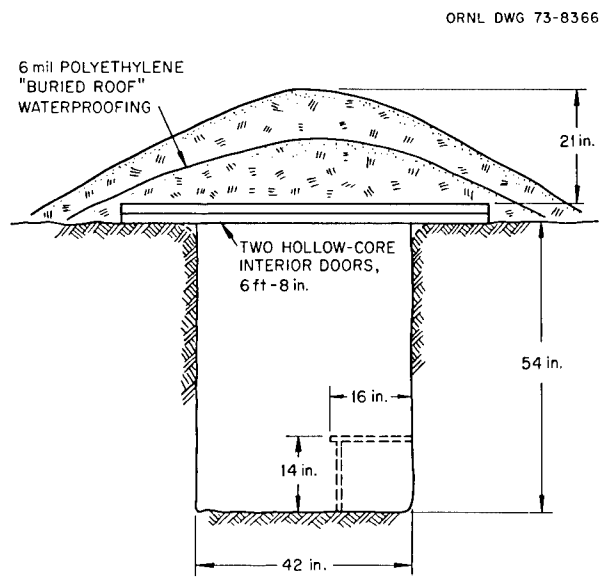

Figure 9.1 Door-Covered Trench Shelter.

9.3 LOCATIONS AND TEST RESULTS

9.3.1 LN316-5A was located on azimuth 113°, 1430 feet from GZ. The predicted overpressure at the surface was 5.0 psi; measured overpressure was 5.0 ± 0.5 psi. Neither LN316-5A nor LN316-5B was instrumented.

Except for compaction of the wet earth and the serious cracking of the single door over the entryway trench (see Figure 9.2), this shelter was undamaged. Only a very little earth was shaken down from the sides. During the preceding wet month its "buried roof" of polyethylene had kept dry all but the parts of the doors resting on the earth. Water from rains and melting snows had wetted these parts and, prior to the blast, caused some caving of the earth from under the doors. This caving had resulted in the free span of the main trench being increased from 42 inches to 45-47 inches, and of the entryway trench, to 34 inches.

The double thick roofing doors were bowed downward almost 1 inch--approximately twice as much as were the full-dimensioned 2" x 6" boards that roofed the far end of the shelter. Most of the downward bowing occurred due to static loading from the earth cover during the month before the blast--as was also the case with LN316-5B.

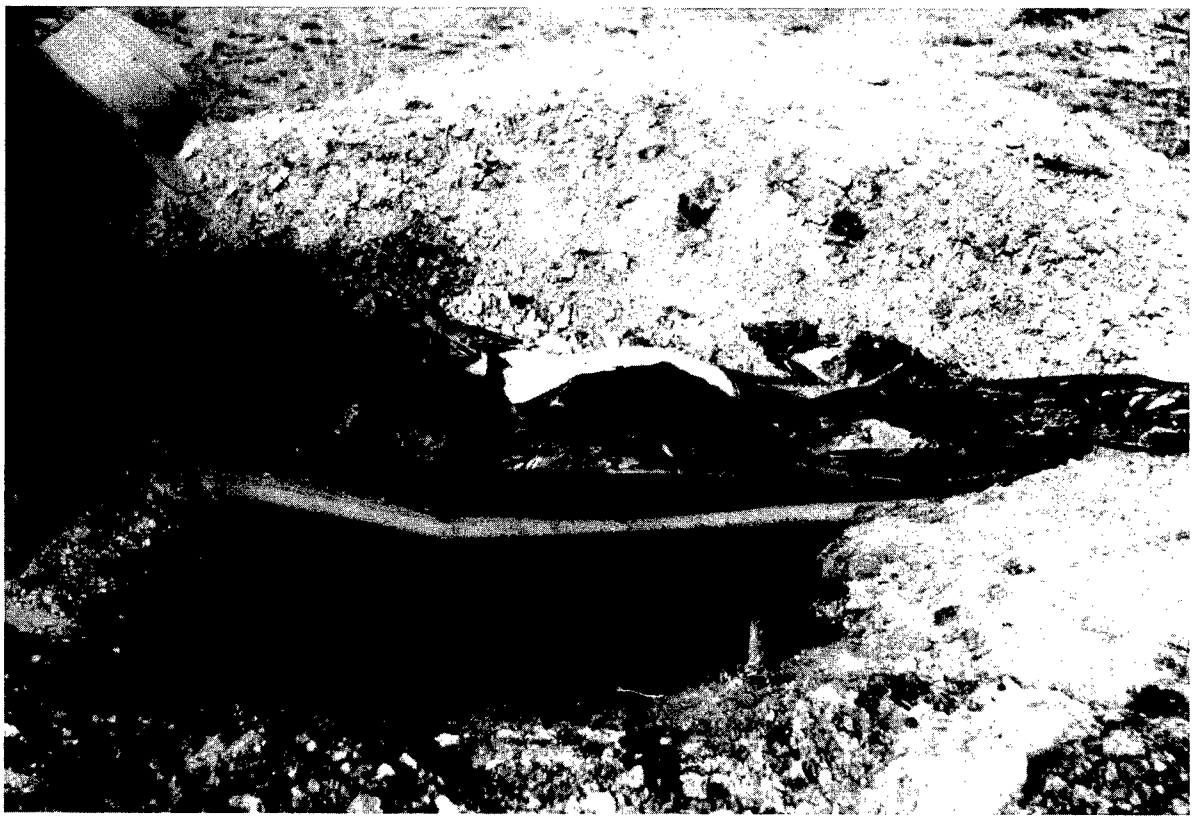

Figure 9.2 Badly Cracked Door Over Entryway Trench of Door-Covered Trench Shelter. The 5 psi overpressure effects did no other damage.

Obviously, the blast air had rushed into this shelter through its approximately 30" x 30" entryway opening, and within about 7 milliseconds (to judge from our ORNL shock tube experiments with models of small open shelters with similar proportions) had caused the overpressure inside the shelter to exceed the decaying overpressure outside. Thus the roof doors were supported from below before enough time had elapsed to permit the overpressure outside to accelerate and move the heavy mass of earth over the doors and the doors themselves downward a sufficient distance to damage the doors.

9.3.2 LN316-5B was located on azimuth 110°, 1900 feet from GZ. The predicted overpressure was 3.0 psi. LN316-5B was identical to LN316-5A, except that there was no sandbag on the door covering part of the entryway trench.

This shelter was undamaged, except for one lower door near the center of the shelter being slightly cracked. The downward bowing of the doors averaged only about 3/4 inch.

9.4 CONCLUSIONS AND RECOMMENDATIONS

9.4.1 Open Door-Covered Trench Shelters can afford worthwhile protection against some blast overpressures high enough to destroy houses, and good protection against most hazards caused by thermal pulse.

9.4.2 Because of the uncertain strength of interior doors and their decreased strength when wetted, doors should only be used for shelter roofs if stronger materials are unavailable.

9.4.3 If a below-ground shelter roofed with doors or other weak roofing materials is built in an area threatened by blast, it should have an entryway with a large cross-sectional area relative to the shelter's interior volume, and this entryway should be left open.

10. EXPEDIENT BLAST VALVES

10.1 PURPOSE

If shelters affording good blast protection were subjected to the higher ranges of the blast overpressures that they can survive, and if these overpressures were produced by tactical or other rather small nuclear weapons, then often there would be insufficient time between the warning bright light of a nuclear detonation and the arrival of the blast in which to close manually operated blast doors or valves. Furthermore, dependable automatic closure of shelter openings has inherent advantages over the inevitably somewhat uncertain performance of manual closures that depend on human alertness.

If enough time is available during an escalating crisis, even expedient shelters should be built so as not only to save the lives of occupants, but also to protect their eardrums, their ability to perform efficiently, and their blast-sensitive communications and other delicate equipment in the shelters. Therefore, at ORNL we designed expedient blast valves of simple types that require only widely available materials and that semiskilled people might be able to build in a few hours. To attain rapid closures, our approach stressed lightweight moving parts that travel only short distances to close, and multiple openings provid- large, low-resistance air channels through the valves.

ORNL shock tube tests of complete small sections of our two types of blast valves that later were blast tested at this Mixed Company Event had shown that our designs could withstand several successive 100 psi shock waves striking complete small sections of these valves head-on, and that closure times were shorter--only 0.6 to 2 milliseconds--than the closure times of most expensive commercial blast valves. At Mixed Company we had an opportunity to test full-sized models of these two new valves, the Overlapping-Flaps Blast Valve and the Caged-Strips Blast Valve, when subjected to the complex shock wave conditions occurring in a vertical airduct leading to an underground shelter.

10.2 CONSTRUCTION

10.2.1 A full-sized Overlapping-Flaps Blast Valve, LN316-12, (see Figures 10.1 and 10.2) was easily made by working 7 man-hours, using only woodworking tools found in many home basement shops. The rubber flaps were easily cut from worn wide-tread tires by using a sharp, well-oiled knife. The rubber strips were nailed and glued to the angularly cut ends of the 18-in.-long, nominal 2" x 12" boards--which were actually 1-1/2 in. thick. Plywood fillers 4" x 11-1/2" x 1" thick separated the boards, and the whole valve housing was strongly nailed together with 16-penny resin-treated nails.

ORNL DWG 73-2229

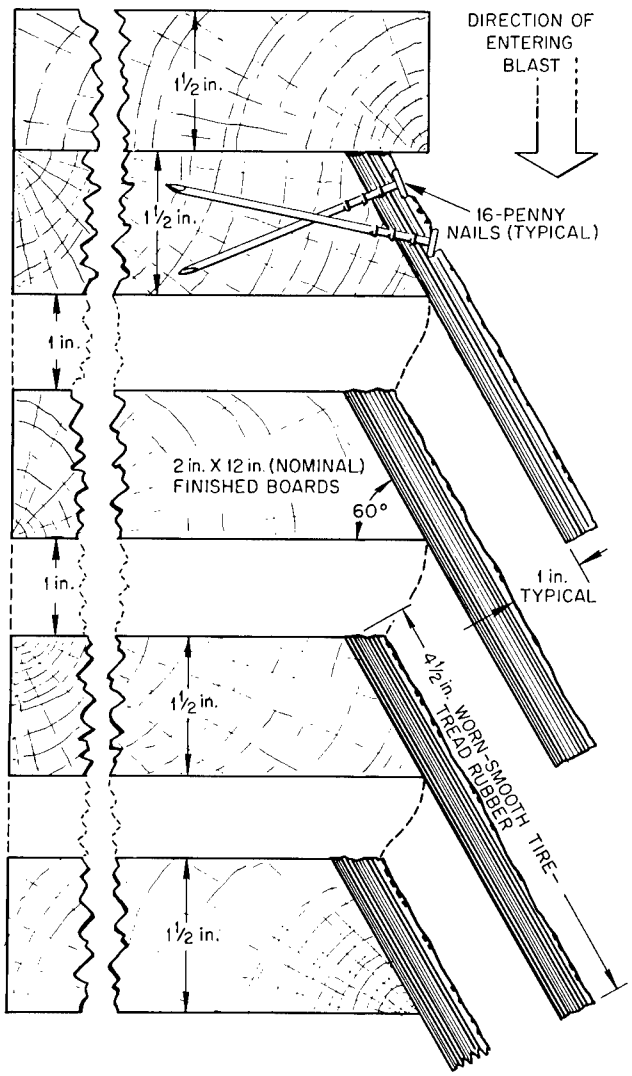

Figure 10.1 Vertical Cross Section Through an Overlapping-Flaps Blast Valve. The tested valve had four open air slots, each 1" high and 10" wide. The overall width of the housing was 18".

10.2.2 An Overlapping-Flaps Blast Valve was installed in a recess in a side of a 7-foot-deep vertical air shaft measuring 19" x 24" in horizontal cross-section--as were two Caged-Strips Blast Valves in their separate shafts. Each valve was mounted 2 feet from the bottom of its vertical air shaft, and, when closed by the blast, prevented the entry of air through a 10-in.-wide rectangular passage into an otherwise closed underground chamber having a volume of 20 cubic feet. Each of these underground structures was made of 2-inch

rough lumber, well braced. The top of each entryway was protected by a blast protection frame built of four short timbers made by cutting railroad ties in half.

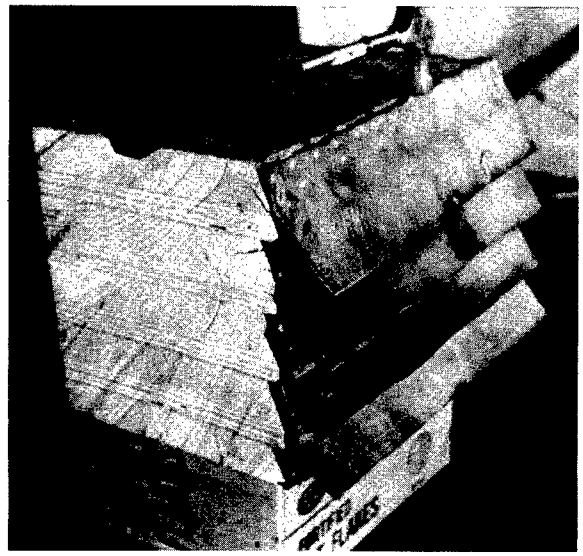

Figure 10.2 100 psi Overlapping-Flaps Blast Valve. This expedient valve was 18 in. wide, and spanned a rectangular air opening 10 in. wide.

10.2.3 Two full-sized Caged-Strips Blast Valves, LN316-11, were also built in a small woodworking shop in rural Colorado and were essentially undamaged after being tested belowground at locations where the overpressures measured one inch above ground were 64.8 ± 5.3 and 35.2 ± 2.9 psi, respectively. However, these valves proved to be so time consuming to build out of ordinary lumber and plywood (which are not of uniform enough dimensions) and required such skilled workmanship that we no longer consider the Caged-Strips Blast Valve to be a practical valve for widespread building during a rapidly escalating crisis. Drawings and a brief description of this valve, which has advantages that include being closed automatically by both the positive and negative blast overpressures, are found in Appendix B.

10.3 LOCATION AND TEST RESULTS

Overlapping-Flaps Blast Valve LN316-12 was tested on azimuth 106°, 420 feet from GZ. The predicted overpressure was 100 psi. The measured surface overpressure was 64.8 ± 5.3 psi. Due to errors, no pressure gauge was placed inside the underground test chamber, and the blast valve was not braced strongly enough to remain in place during the negative pressure phase. As a result, during the negative pressure phase the whole valve was hurled outward into the vertical air shaft, but was not damaged. The fireball blackened the air shaft, but it remained intact.

10.4 CONCLUSIONS AND RECOMMENDATIONS

10.4.1 Overlapping-Flaps Blast Valves are rugged and rapid-closing and could be built and installed by quite average citizens, guided only by well-written and illustrated instructions.

10.4.2 This blast valve was designed for 100 psi overpressure, using standard engineering handbook (Eshbach) values of 145 psi for the shear strength of Douglas fir boards. Later tests at Oak Ridge indicated that for straight-grained, sound Douglas fir boards subjected to stresses similar to those occurring in this blast valve, the ultimate shear strength is about 1,140 psi. For expedient equipment in a nuclear crisis a factor of safety of 8 is unnecessarily high. We conclude that sound 2" x 6" boards are sufficiently strong for the housing of such a 100-psi blast valve protecting an opening 10 in. wide.

10.4.3 If boards wider than 2" x 6" are available and a valve with less resistance to air flow is required, then a wider valve housing, spanning an air opening wider than 10 in., can be used--even for a 100-psi valve

10.4.4 If a lower-resistance valve is required and a slower-closing valve would be satisfactory, then the height of the open air-passage slots could be increased--provided (1) the flap material used is strong enough, and (2) the angles made by the flaps and the upstream face of the valve housing are increased so as to maintain equal cross-sectional areas throughout these air passages.

10.4.5 More testing is needed, especially of (1) models having higher and wider air slots; (2) models that also are closed automatically by the negative pressure phase, by having light, hinged flap valves on the inside; and (3) ways to force enough air through a blast valve with an expedient air pump to maintain tolerable temperatures in a crowded shelter during hot weather.*

---

*Probably an expedient KAP can pump enough air through an Overlapping-Flaps Blast Valve of the size tested in Mixed Company to prevent harmful concentrations of respiratory carbon dioxide inside a shelter occupied by up to 100 persons. But in hot weather, a KAP could not pump enough air through such relatively small openings to keep 10 people tolerably cool in some long-occupied, crowded shelters. See "How to Make and Use an Homemade, Large-Volume, Efficient Shelter-Ventilating Pump: The Kearny Air Pump," by C. H. Kearny, ORNL-TM-3916.

11. OVERALL CONCLUSIONS AND RECOMMENDATIONS

11.1 The expedient shelters covered in this report afford better fall-out and blast protection than do most of the expedient or hasty shelters that are described in current military or civilian publications, domestic or foreign. Untrained men can quickly build them using more widely available and less expensive materials than are required for most shelters.

11.2 Step-by-step, illustrated instructions for building these expedient shelters and their expedient equipment should be developed, thoroughly tested, and kept ready for rapid, widespread distribution during a possible crisis.

11.3 Since in most areas the soil conditions permit construction of expedient shelters that incorporate design features that increase shelter strength by utilizing earth arching, instructions for building blast-resistant expedient shelters should emphasize means for attaining earth arching--including keeping the excavations as narrow as practical and using sufficient depths of well-tamped earth cover as means to attain effective earth arching.

11.4 Well designed expedient shelters, if built in areas threatened by blast hazards, should be equipped with expedient quickly closable blast doors--if sufficient time and materials are available.

11.5 To provide effective automatic closure for blast shelters threatened especially by small nuclear weapons, the Overlapping-Flaps Blast Valve should be further developed and tested.

11.6 In anticipation of fuel air explosive (FAE) weapons becoming important weapons in future conventional wars, bunkers, protective shelters, and other field fortifications that afford adequate protection against this new threat should be developed and prooftested. Quickly closable blast doors to protect all openings will be essential components of such structures built in rear areas and not threatened by ground assault.

APPENDIX A: AVAILABILITY OF POLES AND LOGS FOR EXPEDIENT SHELTERS*

The real danger of having severe shortages in lumber for construction of expedient shelters makes consideration of the use of shelters made of logs, poles and wire very attractive, provided there is sufficient timber resources available. Data were obtained from all of the U.S. Forestry Service district offices. The data were the latest reports of the U.S. Forestry Service surveys which are repeated on about a 10-year cycle. In many cases the latest two survey reports were available. The trends in timber resources show an increase in most areas, although there is a definite shift toward smaller trees and a higher softwood to hardwood ratio. Therefore, for the purpose of our analysis it will not matter much that the reports are not all for the same year. The conclusions should be the same if they were all for the same year. In general, the tables presented the data by county. In some cases data were reported by groups of counties. In order to relate the data to a realistic evacuation plan, it was assumed that the urban residents would be moved to rural or suburban areas within the same OBE** area. Calculations were made for each county to show the amount of commercial forest land, the volume of usable wood in growing stock (trees 5 inches or greater at breast height), the volume of usable wood in saw timber (trees 9 inches or greater in the east, trees 10 inches or greater in the west), the annual cut of growing stock and of saw timbers, and the annual cut of pulpwood logs wherever data were available. These data are available at ORNL, but are not included in this report because of the volume. The county data were assembled by OBE. These data were used to calculate the number of expedient shelters which could be constructed in each OBE using

---

*Appendix A, including the map on the following page, is an excerpt from Section 4.4 ("Other Building Materials") of Expedient Shelter Survey, Final Report, July 1973, by George A. Cristy, ORNL-4860.

**One of the 174 trade areas identified by the U.S. Department of Commerce, Office of Business Economics.

ORNL-DWG 72-9785B

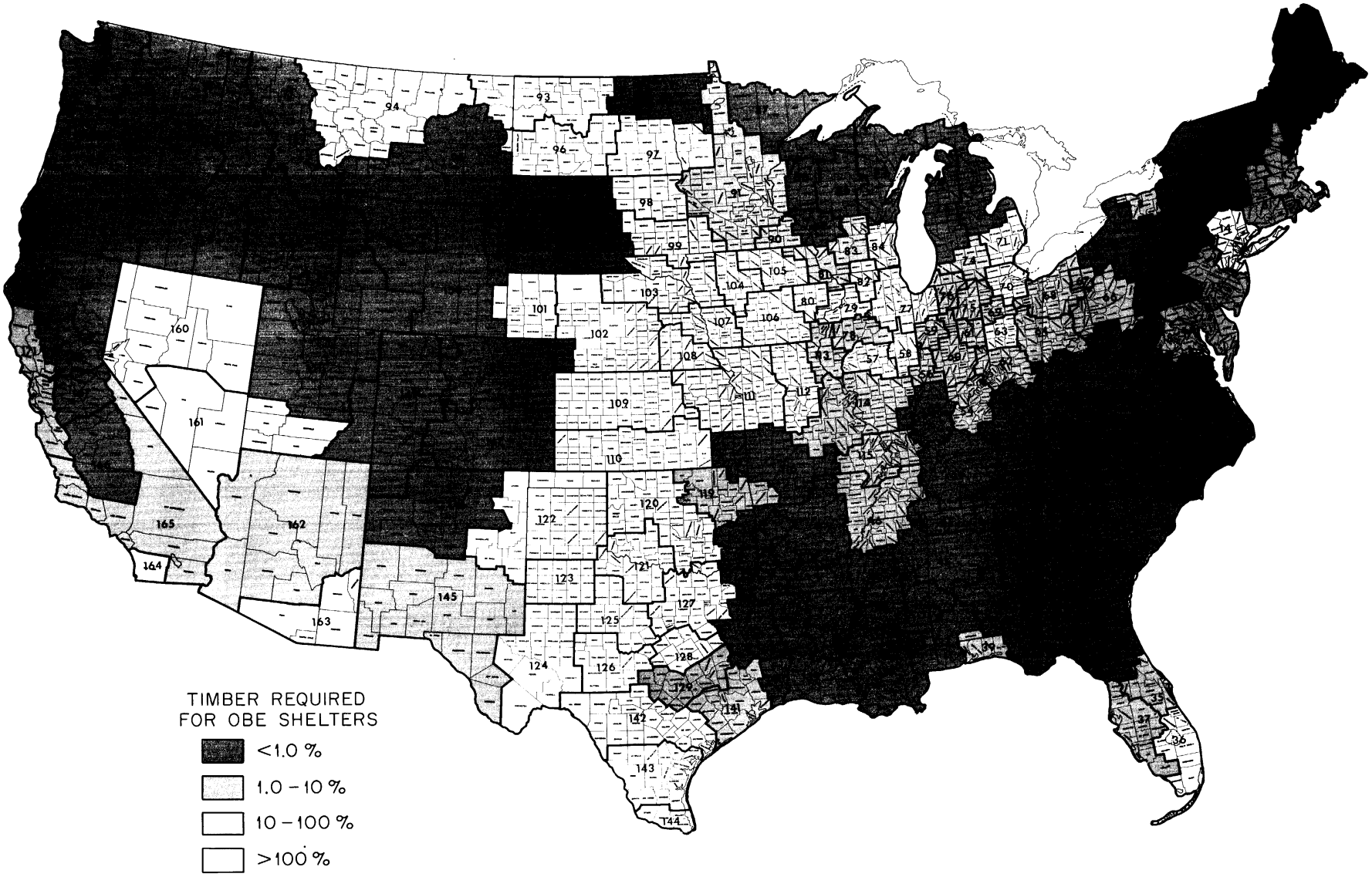

Adequacy of Timber for Expedient Shelters

each of the following bases for which data were available.

(1) Volume of growing stock* in rough cords (assuming one-fourth cord of growing stock per shelter space);

(2) Volume of saw timber in board feet (assuming 120 board feet per shelter space);

(3) Annual cut of growing stock in cubic feet (assuming 20 cubic feet of growing stock per shelter space);

(4) Annual cut of saw timber in board feet; and

(5) Annual cut of pulpwood logs.

Some of the results of these calculations are shown in the accompanying map. . . In the map, the dark green areas represent OBEs that would require less than 1% of its timber resources to shelter all the population. The medium green areas represent OBEs that could shelter all the population with less than 10% of the forest resources. Since the annual cut is about 5% of the stock in each state and since probably no more than half of any population group will need expedient shelter from growing stock, it is clear that these two categories of OBEs would nave no difficulty sheltering their people. On the other hand, the light green and white areas (10-100% and over 100%, respectively) will need other methods, either with or without use of timber resources for log shelters. In many of these areas large amounts of fence posts and stock wire can be found, so the wire-catenary type can be used to advantage here. And in nearly all areas some lumber resources are available at the local retail lumber yards.

---

*It should be noted that the Small-Pole Shelters use poles that are smaller than the lower bound for reporting growing stock. We have no data to indicate the volume of this size available, except the general trend of increasing growing stock (i.e., a continuing supply of small trees).

APPENDIX B: CAGED-STRIPS BLAST VALVE

B.1 PURPOSE

As stated in Subsection 10.1 of this report, we believe that the skills and tools required to make the Caged-Strips Blast Valve are too specialized to justify classifying this valve as an expedient device. However, both the calculations of the full-scale design and the ORNL shock tube experiments with small models have shown that this blast valve with the dimensions of the two models tested at Mixed Company would be closed in about 1 millisecond by a 35 psi shock wave striking the valve head-on. At a shock tube overpressure of about 100 psi, closure time was 0.6 millisecond. A valve capable of closing in about 1 millisecond permits a very small fraction of the shock wave to get through it before it closes. Therefore, such a valve can be used successfully to protect filters and/or delicate instruments without the necessity of using a large surge chamber, baffles, etc., between the valve and the delicate equipment.

Furthermore, the Caged-Strips Blast Valve has these additional advantages: (1) it is rapidly closed both by the positive and the negative overpressures of an explosion; (2) it requires only inexpensive materials that are widely available; and (3) it could be manufactured at quite low cost in shops (such as furniture manufacturing or some precision-casting plants) capable of producing the component sections with tolerances of about $\pm$ 1/32 inch.

B.2 CONSTRUCTION

Figures B.1, B.2, and B.3 show the construction of the two Caged-Strips Blast Valves tested at Mixed Company. The unattached plywood strips are free to move in their wooden "cages," except for the restraint imposed on each strip by its four springs. These springs are strong enough to hold their strip in its fully open position unless it is struck by blast overpressure of either the positive or negative phase.

Like all fast-closing ORNL blast valves, this valve was designed so that its moving parts travel only very short distances before bridging and closing narrow but long air-slots. This design characteristic permits the use of very lightweight moving parts that can be accelerated, decelerated, and closed very rapidly without being damaged.

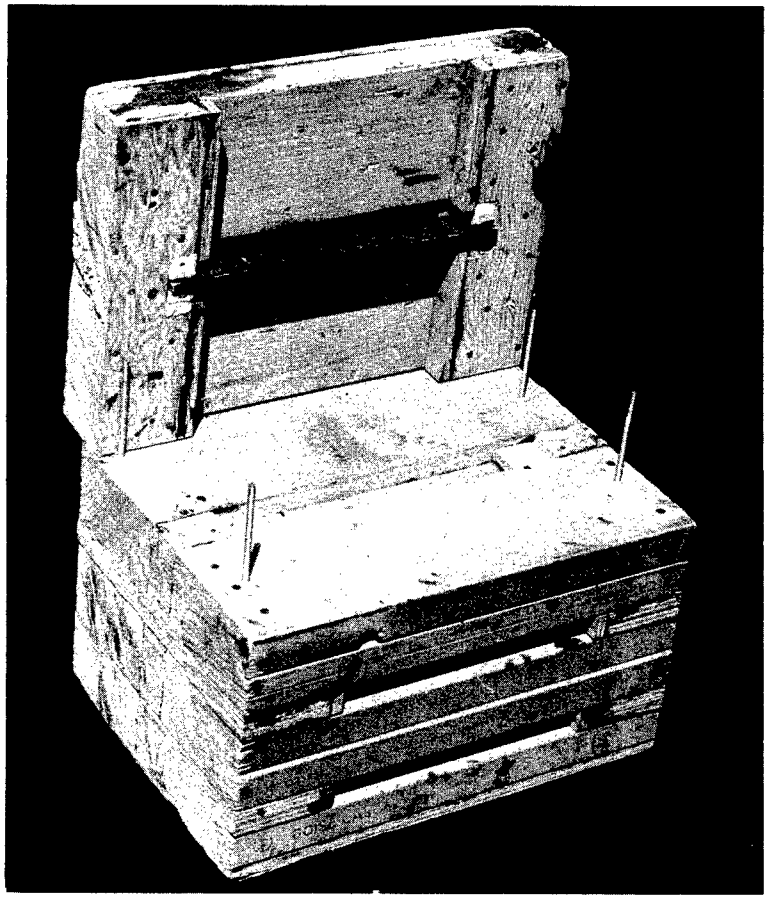

Figure B.1 Partly Disassembled Caged-Strips Blast Valve After Testing at the Measured 65 psi Range. Note the four sponge-rubber "springs" holding a plywood strip in its open position.

Both of the Caged-Strips Blast Valves, LN316-11A and LN316-11B, were made of two end sections, each built of straight-grained Douglas fir boards, pieces of wood cut from boards, and exterior-grade plywood. The four sections were each bonded with a waterproofed resin glue ("Resorcinol," mfg. by U.S. Plywood Corp.) and nails. See Figures B.2 and B.3. The four sections of each valve were joined together with four 5/16-in.-diameter threaded bolts (see Figures B.2 and B.3) that passed through four holes in the wooden housing. Thus bolted together, the valve can be easily disassembled for inspection or repair.

The 10-inch width of the air-slots of these valves correspond to the 10-inch free-span width of the entrance to the rectangular air duct located inside the shelter and leading to the part of this shelter to be

ORNL-DWG 73-10284

BILL OF MATERIAL		
PC	DISCRIPTION	QUAN.
A	FIR SPACER (SEE DETAIL)	2
B	PLYWOOD SPACER (1-in. THICK) SEE DETAIL	6
C	FIR SPACER (SEE DETAIL)	2
D	$^{3}/_{8} \times 1^{13}/_{32} \times 12^{7}/_{8}$-in. PLYWOOD STRIP	3
E	$1^{5}/_{8} \times 5^{3}/_{8} \times 18$-in. FIR (2 x 6-in. STOCK)	12
F	CONICAL SPRING	6
G	SPONGE RUBBER SPRING ($^{7}/_{8} \times {}^{7}/_{8} \times 1$ in.)	6
H	$^{5}/_{16}$-in.-DIAM. BOLT (14-in. LONG)	4
J	$^{1}/_{2} \times 12^{3}/_{8} \times 18$-in. PLYWOOD SHEET	2

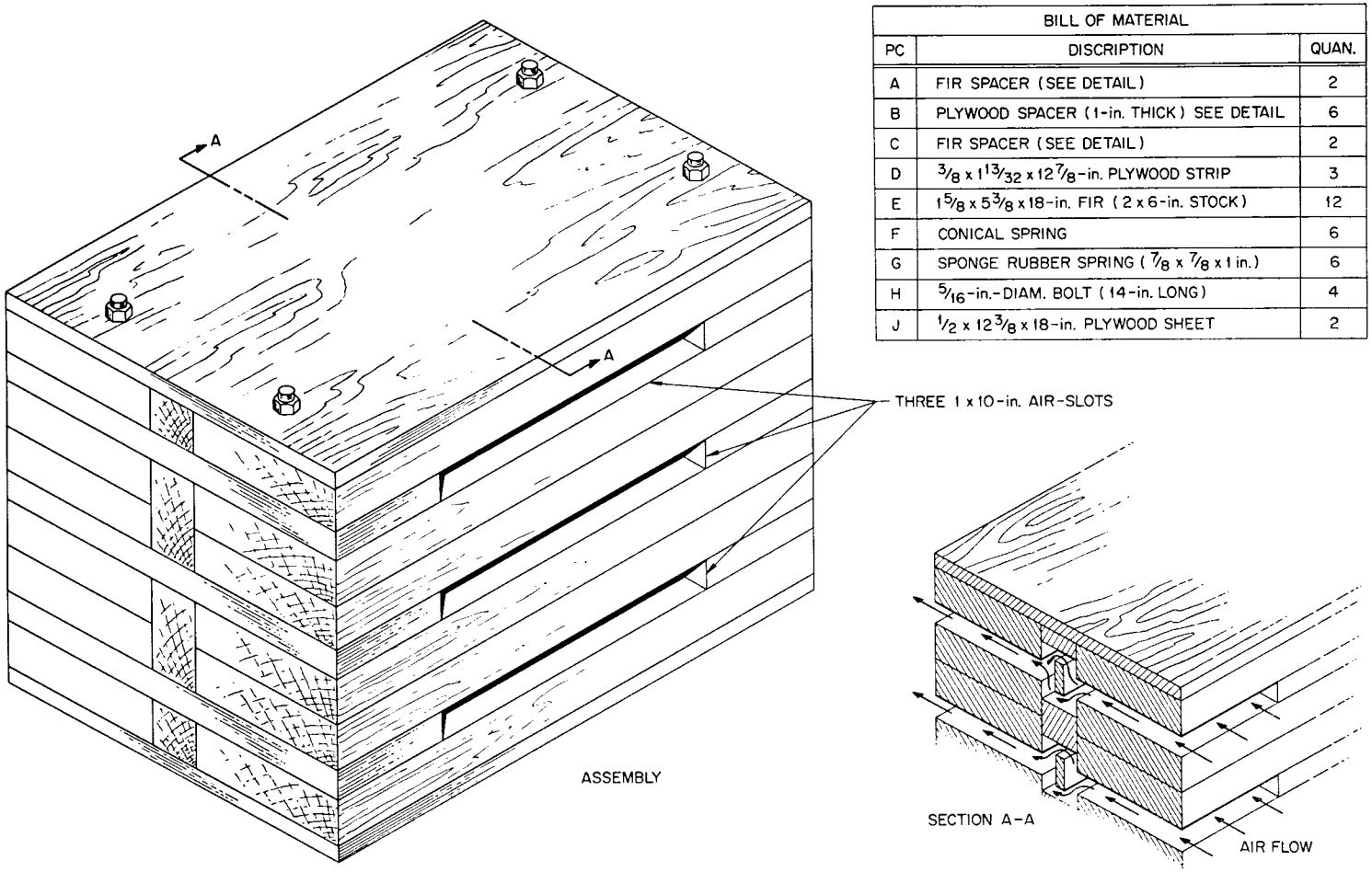

Figure B.2 Caged-Strips Blast Valve LN316-11B. LN316-11A was identical except for one of its "caged" plywood strips being 1/2-in. thick, instead of 3/8-in. thick.

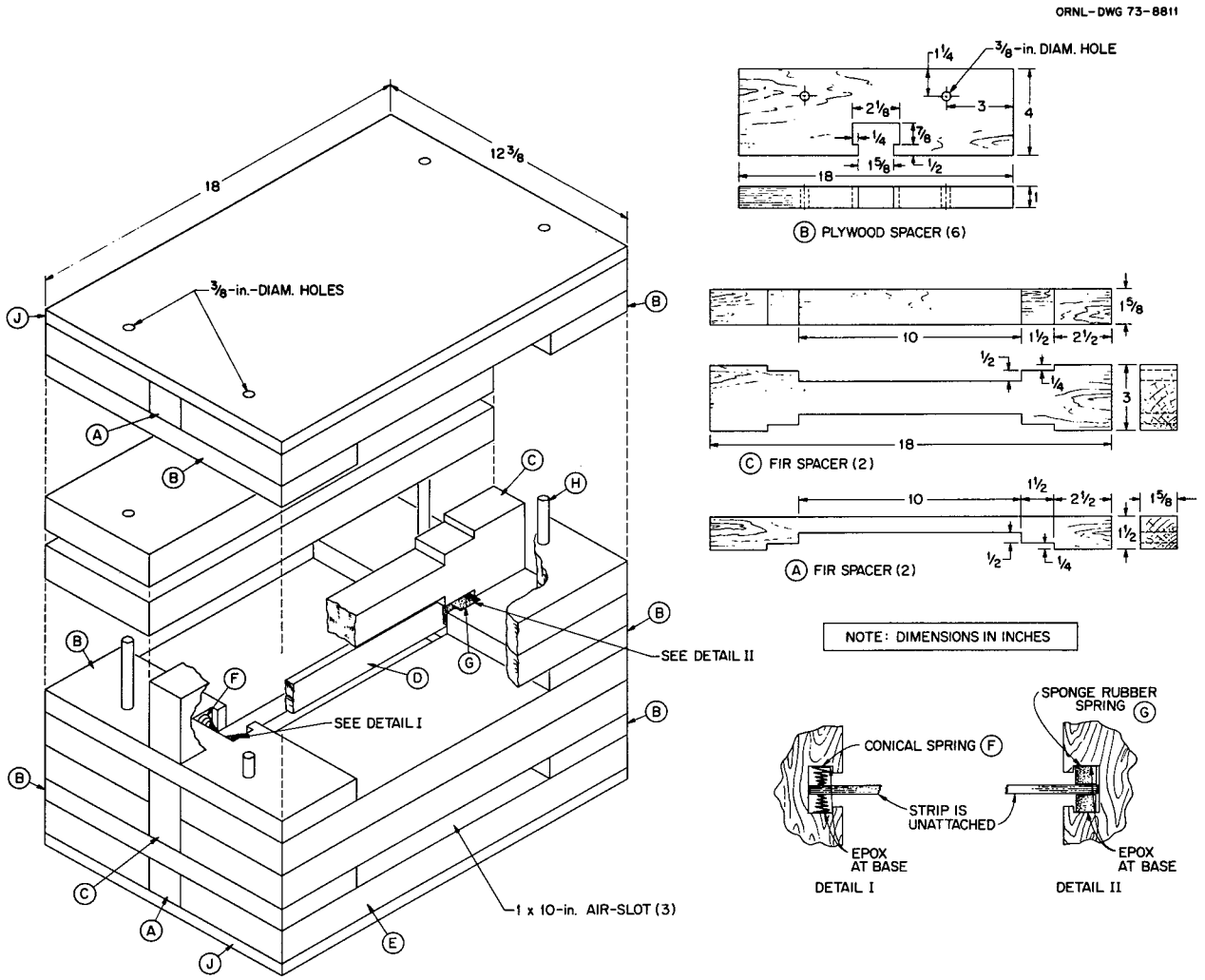

Figure B.3 Construction Details of Caged-Strips Blast Valve.

protected by this valve. Each valve was tested installed in a recessed part of one side of a vertical air shaft, so as to protect an otherwise closed underground chamber, as described in Section 10.2.

Reasons are given in Section 10.2 why sound, straight-grained 2" x 6" boards can be used instead of 2" x 12" boards to make the housing of the somewhat similar housing of the Overlapping-Flaps Blast Valve. Likewise, because beams are to span a 10-inch-wide opening, across and over which this 18-in.-wide valve housing is designed to be installed, 2" x 4" boards (strongly bonded to their spacers) could safely be used instead of the 2" x 6" boards used in the tested models of the Caged-Strips Blast Valve. However, building shorter air-slots in the upstream side of a valve would increase the likelihood of the movable plywood strips being hit at more of an angle by the entering shock waves, with resultant more unequal stresses on these strips.

These two tested valves each had three air-slots. Each slot measured 1" x 10" in cross-section, and this 10-sq.-in. cross-sectional area was maintained clear through the two passages around the sides of each plywood strip when in its open position, and on through the downstream slot. In LN316-11A (tested at the predicted 100 psi range), two of the three movable, unattached plywood strips were made of 3/8-in.-thick exterior plywood, and the third strip was of 1/2-in. exterior plywood. In LN316-1B (tested at the predicted 50 psi range) all three strips were of 3/8-in. plywood. The ends of all the strips were sandpapered smooth and their sharp edges and corners were slightly rounded to minimize the possibility of a strip sticking against a part of its "cage" if hit by a shock wave that did not strike all parts of the strip at the same instant. Plywood, because it is resilient and light, yet resistant to bending, has the characteristics needed for the unattached, easily moved strips of this valve.

All but two of the springs that normally hold the unattached plywood strips in their own open positions were made of rectangular pieces of sponge rubber, 7/8" x 7/8" in cross-section, cut from a rubber pad 1 inch thick. (During an escalating crisis, in many areas improvised rubber "springs" would be more readily obtainable than special metal springs.)

Each piece of rubber was glued on its base to its recess in the wood housing. For comparison, one valve had two conical steel springs, as illustrated in Figure B.3. Both the rubber "springs" and the steel springs were of a strength that a total force of only about 2 lbs was required to close a plywood strip securely against its seat, and the pressure exerted on a strip by even quite high-velocity ventilating airflows was insufficient to move a strip appreciably from its wide-open position.

B.3 LOCATIONS AND TEST RESULTS

B.3.1 Caged-Strips Blast Valve LN316-11A was located on azimuth 101°, 420 feet from GZ. The predicted overpressure was 100 psi; the overpressure measured one inch above ground level was 64.8 ± 5.3 psi. Inside the 20-cubic-foot underground test chamber, the overpressure was about 4 psi. Most of this interior overpressure was due to leaks through cracks around the valve housing and between the boards of the roughly constructed vertical entryway shaft and the perhaps insufficiently compacted backfill under the horizontal part of the underground test chamber, which has been lowered into position as a unit.

The vertical air shaft and the front of the valve were blackened by the fireball, but were undamaged.

LN316-1A, like the other two ORNL blast valves, was not installed securely enough to withstand the outward force during the negative pressure phase, which hurled each of these valves outward into its vertical air shaft. The ends of three of the four threaded bolts of the frame of this valve were bent, but not enough to prevent easy disassembly.

Upon disassembly, all the plywood strips and their steel springs and foam rubber "springs" were found to be in excellent working order. The bases of the foam rubber "springs" were still glued securely to the wood in their recesses. Only some thread-sized, blackened pieces of sagebrush had been blown around the two right-angle turns and far enough to reach the plywood strips. This very lightweight blastborne material did not interfere with the movement of the valves or their

closure. The two 3/8-in.-thick unattached plywood strips were in perfect condition, as was the 1/2-in. strip.

B.3.2 LN316-11B was located on azimuth 106°, 540 feet from GZ. The predicted outside overpressure was 50 psi; the measured, 35.2 ± 2.9 psi.

The three 3/8-in.-thick plywood valve strips were all still in serviceable condition, but the center strip (one of the two painted with waterproofing "Resorcinol" resin glue) was cracked 1-1/4 inch from one end. This end had been slightly abraded--apparently from sticking on the somewhat rough end of its wooden "cage." The unpainted strip had been bowed about 1/8 inch out of line in its weak direction. This damage to two of the three strips indicates the need for smoothing all surfaces of the "cages" in which unattached valve strips should be able to move freely.

B.4 CONCLUSIONS AND RECOMMENDATIONS

B.4.1 Although the blast overpressures to which the two Caged-Strip Blast Valves were subjected in the Mixed Company test were much less than their 100 psi design overpressure, the fact that they remained serviceable after this realistic use and abuse is evidence that supports the ORNL shock tube findings that this unconventional valve is rugged.

B.4.2 If there is likely to be a need for a very fast-closing, low-resistance, yet relatively inexpensive blast valve that is closed both by the positive and negative overpressures, then several designs of the Caged-Strips Blast Valve should be made. They should be blast tested in comparison with improved versions of the Overlapping-Flaps Blast Valve and other low-resistance, fast-closing valves.

ORNL-4905
UC-41 — Health and Safety

INTERNAL DISTRIBUTION

1. Biology Library
2-4. Central Research Library
5-54. Civil Defense Research Section Library
55. MIT Practice School
56-57. ORNL — Y-12 Technical Library Document Reference Section
58-82. Laboratory Records Department
83. Laboratory Records, ORNL RC
84. ORNL Patent Office
85. S. I. Auerbach
86. J. A. Auxier
87. P. R. Barnes
88. W. J. Boegly
89. C. B. Brooks
90 R. B. Burditt (Y-12)
91. T. J. Burnett
92. C. V. Chester
93. R. O. Chester
94. C. E. Clifford
95. A. L. Compere
96. K. E. Cowser
97. G. A. Cristy
98. F. L. Culler
99. N. E. Dunwoody
100. A. P. Fraas
101. J. S. Gailar
102. J. M. Googin (Y-12)
103. J. C. Gower
104. C. M. Haaland
105. D. W. Harrigan (Y-12)
106-107. J. C. Hart
108. R. F. Hibbs
109. D. G. Jacobs
110. G. R. Jasny (Y-12)
111-160. C. H. Kearny
161. D. M. Lang
162. M. I. Lundin
163. J. H. Marable
164. D. B. Nelson
165. F. S. Patton
166. G. L. Ragan
167. R. C. Rosenvinge (Y-12)
168. R. D. Smith (Y-12)
169. W. S. Snyder
170. J. B. Storer
171. J. W. Strohecker (Y-12)
172. E. G. Struxness
173. D. A. Sundberg
174. V. R. R. Uppuluri
175. J. R. Totter
176. A. M. Weinberg
177. E. P. Wigner
178. J. P. Witherspoon, Jr.
179. G. Young

EXTERNAL DISTRIBUTION

180. Advisory Committee on Emergency Planning, Attn: Lauriston Taylor, National Academy of Sciences, Washington, D.C. 20418
181. Harold M. Agnew, Director, Los Alamos Scientific Laboratory, Los Alamos, New Mexico 87544
182. G. A. Andrews, Chairman Medical Division, Oak Ridge Associated University, Oak Ridge, Tennessee 37830
183. E. C. Aldridge, Jr., Director, Strategic Defensive Division, Office of the Secretary of Defense, DOD, Washington, D.C. 20310
184. Army Library, TAGO, Civil Defense Unit, The Pentagon, Washington, D.C. 20301
185. Army Nuclear Defense Laboratory, Technical Library, Edgewood, Maryland 21040
186. Army War College, Library, Fort McNair, Washington, D.C. 20315

187. Lt. General M. J. Asensio, Director, New York State Civil Defense Commission, State Office Building Campus, Albany, N.Y. 12203
188. R. E. Bailey, Nuclear Engineering Department, Purdue University, LaFayette, Indiana 49707
189-190. M. C. Bell, Comparative Animal Research Laboratory, 1299 Bethel Valley Road, Oak Ridge, Tenn. 37830
191. Richard Belt, Office of NATO Affairs, Room 6513, Department of State, Washington, D.C. 22050
192. Donald A. Bettge, Research Directorate, Defense Civil Preparedness Agency, Room 1D538, The Pentagon, Washington, D.C. 20301
193. John E. Bex, DCPA Regional Director, Region 2, Federal Regional Center, Olney, Maryland 20832
194. George F. Bing, Lawrence Livermore Laboratory, P. O. Box 808, Livermore, California 94550
195. Bruce Bishop, DCPA Regional Director, Region 4, Federal Center, Battle Creek, Michigan 49016
196. D. B. Bobrow, Director, Center for International Relations, Social Science Building, Room 1246, University of Minnesota, Minneapolis, Minnesota 55455
197. J. C. Bresee, Division of Applied Technology, U.S. Atomic Energy Commission, Washington, D.C. 20545
198. Robert I. Brown, U.S. Department of Agriculture, Room 307, Administration Building, Washington, D.C. 20250
199. Stephen L. Brown, Stanford Research Institute, Menlo Park, Calif. 94025
200. William M. Brown, Research Consultant, 19709 West Horseshoe Drive, Topanga, Calif. 90290
201. Arthur Broyles, Department of Physics, University of Florida, Gainesville, Florida 32601
202. Zbigniew Brzezinski, Director, Research Institute on Communist Affairs, 420 West 118th Street, New York, N.Y. 10027
203. James O. Buchanan, Defense Civil Preparedness Agency, Room 1E542, The Pentagon. Washington, D.C. 20301
204. Zolin G. Burson, EG&G, Inc., 680 E. Sunset Road, P. O. Box 1912, Las Vegas, Nevada 89109
205. Arthur D. Caster, Chairman, Coordinating Committee on Civil Defense, American Society of Civil Engineering, 2864 McFarlan Park Drive, Cincinnati, Ohio 45211
206. LTC J. F. Castro, Commanding Officer, U.S. Army Cold Regions Research and Engineering Laboratory, Hanover, N.H. 03755
207. F. H. Chick, DCPA, Region 8, Federal Regional Center, Bothell, Washington, 98011
208. William K. Chipman, Deputy Assistant Director for Plans and Operations Division, Defense Civil Preparedness Agency, Washington, D.C. 20301
209. Major A. J. Christensen, Commandant, U.S. Army Engineer School, Attn: ATSEN-DVTL, Fort Belvoir, Va. 22060
210. Civil Defense Technical Services Center, College of Engineering, Department of Engineering, Gainesville, Florida 32061
211. Earl Crisler, President, LAMBDA Corporation, 1501 Wilson Blvd., Suite 500, Arlington, Virginia 22209

212. James A. Davis, Emergency Preparedness Division, Agricultural Stabilization and Conservation Service, USDA, Room 6622, South Building, Washington, D.C. 20250
213. L. J. Deal, Assistant Director for Health Protection, Division of Operational Safety, U.S. Atomic Energy Commission, Washington, D.C. 20545
214. Defense Nuclear Agency, Library, 2020 14th Street, North, Arlington, Virginia 22201
215. The Dikewood Corporation, 1009 Bradbury Drive, S.E., University Research Park, Attn: Mary Berran, Librarian, Albuquerque, New Mexico 87106
216. Frances K. Dias, DCPA Regional Director, Region 7, Post Office Box 7287, Santa Rosa, Calif. 95401
217. Director, Disaster and Defense Services Staff, Agricultural Stabilization and Conservation Service, U.S. Dept. of Agriculture, Washington, D.C. 20250
218. Disaster Research Center, Ohio State University, 404 B West 17th Ave., Columbus, Ohio 43210
219. P. J. Dolan, Stanford Research Institute, Menlo Park, California 94025
220. R. J. Englemann, Chief, Fallout Branch, Division of Biomedical and Environmental Research, U.S. Atomic Energy Commission, Washington, D.C. 20545
221. C. R. Fisher, Oak Ridge Operations, U.S. Atomic Energy Commission, Oak Ridge, Tenn. 37380
222. John R. Fisher, Captain, CEC, USN, Assistant Commander for Military Readiness, Dept. of the Navy, Naval Facilities Engineering Command, Washington, D.C. 20390
223. William J. Flathau, Director, Weapons Effects Laboratory, U.S. Army Engineer Waterways Experiment Station, Vicksburg, Mississippi 39180
224. Col. Wallace E. Fluhr, Professor and Head, Department of Civil Engineering, USAF Academy, Colorado 80840
225. Col. R. L. Fox, Director of Civil Defense, State of Tennessee, National Guard Armory, Sidco Drive, Nashville, Tenn. 37204
226. George F. Fries, Room 209, Dairy Administration Bldg. (ARC), Agriculture Research Service, Beltsville, Maryland 20705
227. Verne C. Fryklund, Deputy Director of Nuclear Monitoring Research, DARPA, 1400 Wilson Boulevard, Arlington, Virginia 22209
229. Soloman Garb, Professor Pharmacology, University of Missouri, Medical School, Columbia, Missouri 65201
230. Clark D. Garland, Assistant Professor, Agricultural Economics, Agricultural Extension Service, P. O. Box 71, Knoxville, Tenn. 37901
231. R. B. George, Technical Assistant, Office of Doctrine and Training Development, Army Engineer School, Fort Belvoir, Va. 22060
232. Leon Goure, Center for Advanced International Studies, University of Miami, P. O. Box 8123, Coral Gables, Florida 33124
233. Sidney Graybeal, U.S. Arms Control and Disarmament Agency, New State Department Building, Washington, D.C. 20451
234. J. C. Greene, Director, Postattack Research Division, Defense Civil Preparedness Agency, Washington, D.C. 20301

235. S. A. Griffin, Dean, School of Agriculture, Tennessee Polytechnic Institute, Cookeville, Tenn. 38501
236. Don R. Guier, DCPA Regional Director, Region 5, Federal Regional Center, Denton, Texas 76201
237. W. J. Hall, Department of Civil Engineering, University of Illinois, 1108 Civil Engineering Building, Urbana, Illinois 61801
238. William E. Hanzel, DCPA Regional Director, Region 8, Federal Center, Bothell, Washington 98001
239. J. Harley, Director, Health and Safety Laboratory, U.S. Atomic Energy Commission, Washington, D.C. 20545
240. Howard P. Harrenstien, Dean, School of Engineering, University of Miami, Miami, Florida 33124
241. David G. Harrison, DCPA Regional Director, Region 6, Federal Regional Center, Building 710, Denver, Colorado 80225
242. Institute for Defense Analyses, Attn: Dr. Abner Sachs, 400 Army-Navy Drive, Arlington, Virginia 22202
243. Lowell B. Jackson, University Extension -- Engineering, The University of Wisconsin, 432 North Lake Street, Madison, Wisconsin 53706
244. R. L. Jepson, Rural Civil Defense Research, Rm. 113, Umberger Hall, Kansas State University, Manhattan, Kansas 66502
245. Chief, Joint Civil Defense Support Group, Office, Chief of Engineers, Department of the Army, Attn: ENGMC-D, Washington, D.C. 20314
246. Herman Kahn, Director, Hudson Institute, Quaker Ridge Road, Croton-on-Hudson, New York 10520
247. Jack R. Kelso, Defense Atomic Support Agency, Department of Defense, Washington, D.C. 20305
248. Joseph T. Kendrick, Bureau of Politico-Military Affairs, Department of State, Washington, D.C. 20525
249. Robert P. Kennedy, Holmes and Narver, Inc., 400 East Orangethrope Avenue, Anaheim, Calif. 92801
250. T. E. Kennedy, Army Engineer Waterways Experiment Station, Box 631, Vicksburg, Mississippi 39180
251. Charles D. Kepple, 6912 Floyd Avenue, Springfield, Va. 22150
252. J. W. Kerr, Defense Civil Preparedness Agency, Room 1E542, The Pentagon, Washington, D.C. 20301
253. William Kittel, Emergency Preparedness Office, Food and Drug Administration, 5600 Fishers Lane, Rockville, Maryland 20852
254. Harold Knapp, Institute for Defense Analyses, 400 Army-Navy Drive, Arlington, Va. 22202
255. Robert A. Krupka, Riverside Research Institute, 80 West End Avenue, New York, N.Y. 10023
256. Albert Latter, R&D Associates, P. O. Box 3580, Santa Monica, Calif. 90405
257. Richard K. Laurino, System Sciences, Inc., 750 Welch Road, Palo Alto, Calif. 94304
258. H. F. Lehnert, USDA-ES, Plant Industry Station, Beltville, Maryland 20705
259. J. L. Liverman, Assistant General Manager for Biomedical & Environmental Research & Safety Programs, U.S. Atomic Energy Commission, Washington, D.C. 20545

260. A. Longinow, IIT Research Institute, 10 West 35th Street, Chicago, Ill. 60616
261. Stephen J. Lukasik, Director, Defense Advanced Research Projects Agency, 1400 Wilson Blvd., Arlington, Va. 22209
262. William Marty, Unified San Diego County Civil Defense and Disaster Organization, 7939 John Towers Avenue, Santee, Calif. 92071
263. J. R. Maxfield, P. O. Box 9503, Lakewood Station, Dallas, Texas 75214
264. Peter C. McGillivray, Director, Civil Defense, Palmer Park, Detroit, Michigan
265. William G. McMillan, McMillan Science Associates, Suite 901, Westwood Center Building, 1100 Glendon Ave., Los Angeles, Calif. 90024
266. G. E. Miller, Jr., Regional Agricultural Engineer, Rural Fallout Shelter Development, Department of Agricultural Engineering, University of California, Davis, Californi 95616
267. J. E. Miller, Division of Biomedical and Environmental Research, U.S. Atomic Energy Commission, Washington, D.C. 20545
268. J. K. Miller, Comparative Animal Research Laboratory, 1299 Bethel Valley Road, Oak Ridge, Tenn. 37830
269. W. F. Moss, Assistant to the Secretary, Intergovernmental Affairs, USDA, Washington, D.C. 20250
270. Peter Moulthrop, Lawrence Livermore Laboratory, P. O. Box 808, Livermore, Calif. 94550
271. Walter H. Murphey, Editor, Survive, P. O. Box 910, Starke, Florida 32901
272. George E. Myers, DCPA Liaison Officer, Hq Continental Army Command, ATOPS-P L-DM, Fort Monroe, Virginia 23351
273. David L. Narver, Jr., Holmes and Narver, Inc., 400 East Orangethrope Avenue, Anaheim, Calif. 92801
274. E. F. Newman, U.S. Atomic Energy Commission, ORO, Oak Ridge, Tenn. 37830
275. Brigadier General Wayne S. Nichols, U. S. Army Engineer Division, Ohio River, P. O. Box 1159, Cincinnati, Ohio 45201
276. Office of the Secretary of Defense, Installations and Logistics, Room 3C771, The Pentagon, Washington, D.C. 20301
277. Operations Research and Economic DW Library, Attn: Mrs. Patricia D. Chapman, Research Triangle Institute, P. O. Box 12194, Research Triangle Park, N.C. 27709
278. Richard Park, National Academy of Sciences, 2101 Constitution Ave., Washington, D.C. 204k8
279. Major Donald Parrish, 2950A Summerall Circle, Fort Eustis, Va. 23604
280. D. A. Patterson, Budget and Planning Staff, Tennessee Valley Authority, 410 New Sprankle Building, Knoxville, Tenn. 37902
281. Steuart Pittman, Shaw, Pittman, Potts, Trowbridge, and Madden, Barr Building, 910 17th Street, N.W., Washington, D.C. 20006
282. Ren Read, Assistant Director of Technical Services, Defense Civil Preparedness Agency, Washington, D.C. 20301
283. Research and Technical Support Division, Oak Ridge Operations, U. S. Atomic Energy Commission, Oak Ridge, Tenn. 37830

284. Bernice Rideout, Office of Civil Defense, Statehouse, Augusta, Maine 04330
285. James Roembke, Defense Civil Preparedness Agency, Washington, D.C. 20301
286. Joseph Romm, Systems Sciences, Inc., 4720 Montgomery Lane, Bethesda, Maryland 20014
287. I. J. Russell, Associate Professor of Chemistry, Boston College, 140 Commonwealth Avenue, Chestnut Hill, Mass. 02167
288. Col. Charles W. Sampson, Assistant Deputy Chief of Staff, Civil Engineering, HQ Strategic Air Command, Offutt AFB, Nebraska 68113
289. L. B. Sasser, Comparative Animal Research Laboratory, 1299 Bethel Valley Road, Oak Ridge, Tennessee 37830
290-299. W. W. Schroebel, Division of Biomedical and Environmental Research, U.S. Atomic Energy Commission, Washington, D.C. 20545
300. F. Seitz, President, Rockefeller University, York Ave. and E 66th, New York, N.Y. 10021
301. E. C. Sharman, USDA, Room 750, Federal Center Building, No. 1, Hyattsville, Maryland 20782
302. A. F. Shinn, Paterson State College, 300 Pompton Road, Wayne, N.J. 07470
303. George N. Sisson, Shelter Research Division, Defense Civil Preparedness Agency, Washington, D.C. 20301
304. Raymond S. Smith, Director, Flagler County Civil Defense, Court House, Bunnell, Florida 32010
305. L. V. Spencer, National Bureau of Standards, U.S. Department of Commerce, Washington, D.C. 20234
306. Clarence E. Stevens, Jr., Extension Agricultural Engineer, University of Missouri, Columbia, Missouri 65201
307. Walmer E. Strope, Stanford Research Institute, SRI-WASHINGTON, 1611 North Kent Street, Rosslyn Plaza, Arlington, Virginia 22209
308. Carl L. Sturgill, Civil Defense Director, Municipal Building, Athens, Tenn. 37303
309. C. J. Sullivan, Director, Dept. of Civil Defense, State of Alabama, Administrative Bldg. Basement, 64 N. Union, Montgomery, Ala. 36104
310. Frank P. Szabo, Defense Research Establishment, Ottowa, Ontario, Canada KIA OZ4
311-312. Technical Information Center, Oak Ridge Operations, U.S. Atomic Energy Commission, Oak Ridge, Tenn. 37830
313. Edward Teller, Associate Director, Lawrence Livermore Laboratory, P. O. Box 808, Livermore, Calif. 94550
314. Claude B. Thompson, DCPA Regional Director, Region 3, Federal Regional Center, Thomasville, Georgia 37192
315. U.S. Army Engineer Research and Development Laboratories, Library, Fort Belvoir, Virginia 22060
316. Luke Vortman, Sandia Corporation, P. O. Box 5800, Albuquerque, New Mexico 87115
317. Kenneth C. Walker, Assistant to Administrator, U.S. Department of Agriculture, Agricultural Research Services, Washington, D.C. 20250
318. Carl Walske, Chairman of Military Liaison Committee, U.S. Atomic Energy Commission, Washington, D.C. 20545

319. Lee Webster, Advanced Ballistic Missile Defense Agency, Huntsville Office ABH-S, P. O. Box 1500, Huntsville, Alabama 35807
320. Clayton S. White, The Lovelace Foundation, Albuquerque, New Mexico 98108
321. Allan R. Zenowitz, DCPA Regional Director, Region 1, Federal Regional Center, Maynard, Massachusetts 01654
322. Martin Zlotnick, Advanced Ballistic Missile Defense Agency, 1300 Wilson Boulevard, Arlington, Virginia 22209
323. LTC J. C. Chase, Director of Facility Engineering, Fort Sill, Oklahoma 73503
324. Brig. General George D. Eggers, Deputy Director for Operations (Strategic and General Operations), Office of the Joint Chiefs, The Pentagon, Washington, D.C. 20310
325. LTC Douglas A. Hughes, Room 5G088, Office of the Chief of Engineers, Department of the Army, Forrestal Building, Washington, D.C. 20314
326. LTC Richard J. Keating, DCSOPS, Department of the Army, Room 3E549, The Pentagon, Washington, D.C. 20310
327. Col. George H. Patrick III, Military Assistant to the Director, Defense Civil Preparedness Agency, The Pentagon, Washington, D.C. 20301
328. Col. W. G. Stewart, Chief, Engineer Strategic Studies Group, 6500 Brooks Lane, Washington, D.C. 20016
329. Governor John E. Davis, Director, Defense Civil Preparedness Agency, Washington, D.C. 20301
330. Norman R. Augustine, Vought Systems Division, P. O. Box 5907, Dallas, Texas 75222
331. Lara H. Bakee, TD-7, University of California, Los Alamos Scientific Laboratory, P. O. Box 1663, Los Alamos, New Mexico 87544
332. Captain Marty Bowling, Nuclear Agency, Fort Bliss, Texas 79916
333. Donald Byers, University of California, Los Alamos Scientific Laboratory, P. O. Box 1663, Los Alamos, New Mexico 87544
334. Adolph Dubs, Director of Soviet Union Affairs, Department of State, Washington, D.C. 20520
335. Joseph T. Gurganious, U.S. Army Land Warfare Laboratory, Mobility Branch, Aberdeen Proving Ground, Maryland 21005
336. Clarence E. Larson, Commissioner, U.S. Atomic Energy Commission, Washington, D.C. 20545
337. Research and Technical Support Division, AEC, ORO
338. Patent Office, AEC, ORO

339-575. Given distribution as shown in TID-4500 under Health and Safety category (25 copies — NTIS)

MIXED COMPANY
DISTRIBUTION LIST

(Total Copies 175)

	Copies
DEPARTMENT OF DEFENSE	
Defense Documentation Center Cameron Station Alexandria, Virginia 22314	
Attn: TC	12
Director Defense Nuclear Agency Washington, D.C. 20305	
Attn: SPSS J.G. Lewis	1
DDST	1
SPSS, Maj R. Waters	1
SPSS, C. McFarland	1
SPAS, CPT R. Huston	1
Technical Library	2
SPSS, MAJ W. Shepard	1
STSP, LTC R. Holmes	1
APSI, (Archives)	1
STSP	1
SPSS	2
SPAS	1
Chairman Department of Defense Explosives Safety Board RM-GB270, Forrestal Building Washington, D.C. 20301	1
Commander Field Command Defense Nuclear Agency Kirtland AFB, New Mexico 87115	
Attn: FCTD-T	1
FCCOM	1
FCTD	1
FCTD-A	1
FCTD-A, Technical Library	1
FCTD-T2	1
Chief Nevada Operations Branch Field Command TD, DNA Defense Nuclear Agency Mercury, Nevada 89023	
Attn: FCTD-N	1
R. Ward	1
J. Lacomb	1

DISTRIBUTION (Cont)

	Copies
Director Weapons Systems Evaluation Group, ODDR&E Office, Secretary of Defense 400 Army-Navy Drive Washington, D.C. 20305	
Attn: CAPT Donald E. McCoy, USN	1
Director Defense Advanced Research Projects Agency Architect Building 1400 Wilson Blvd. Arlington, VA 22209	
Attn: Document Control	1
Assistant to the Secretary of Defense Atomic Energy Washington, D.C. 20301	
Attn: Document Control	1
Director Defense Intelligence Agency Washington, D.C. 20301	
Attn: DIAAP-8B	1
DIAST-3	1
Director of Defense Research & Engineering Washington, D.C. 20301	
Attn: Asst. Dir., Strategic Weapons	1
Asst. Dir., Nuclear Programs	1
Director Joint Strategic Target Planning Staff Offutt AFB Omaha, NB 68113	
Attn: JLTW	1
DEPARTMENT OF THE ARMY	
Commander Aberdeen Research and Development Center Aberdeen Proving Ground, Maryland 21005 (Address CNWDI & Classified - Attn: AMXRD-XSE for)	
Attn: J.J. Meszaros	1
USAARDC	1
R.D. Mayerhofer	1
AMXRD-BTL, Mr. G.D. Teel	1
N.H. Ethridge	1
J.H. Keefer	3
R.N. Schumacher	1
W.J. Schuman	1

DISTRIBUTION (Cont)

	Copies
Director Army Engineer Waterways Experiment Station Box 631 Vicksburg, Mississippi 39180	
Attn: Mr. A.A. Rula	1
Library Branch	1
Mr. J.P. Balsara	1
Mr. L. Ingram	1
Mr. R. Ballard	1
Dr. Guy Jackson	1
Commander Edgewood Arsenal Edgewood Arsenal, Maryland 21010	
Attn: SMUEA-TS-TM (R.V. Navin)	1
Commander Fort Huachuca Sierra Vista, Arizona 85613	
Attn: Rolland J. Tuttle	1
Department of the Army Harry Diamond Laboratories Washington, D.C. 20438 (CNWDI-Inner Envelope: Attn: AMXDO-RBM)	
Attn: AMXDO-NP	1
Commander Joint Tactical Communications Office Fort Monmouth, New Jersey 07703	
Attn: TRI-TAC/TT-MD-RR	1
Commander U.S. Army Combat Developments Command Nuclear Agency Fort Bliss, Texas 79916	
Attn: MAJ E.A. Starbird	1
Commander U.S. Army Electronics Command Fort Monmouth, New Jersey 07703	
Attn: R.A. Freiberg	1
R. Robbiani	1
Department of the Army U.S. Army Weapons Command Headquarters Rock Island, Illinois 61201	
Attn: SWERR-R, B.E. Morris	1

DISTRIBUTION (Cont):

	Copies
Redstond Scientific Information Center U.S. Army Missile Command Redstond Arsenal, AL 35807	
Attn: Chief, Documents Section	1
DEPARTMENT OF THE NAVY	
Commanding Officer Naval Civil Engineering Laboratory Port Hueneme, California 93043	
Attn: D.M. Derr	1
R.J. Odello	1
W.A. Shaw	1
Naval Ordnance Laboratory Silver Spring, Maryland 20910	
Attn: Code 121, Navy Nuc Programs	1
J. Petes, Code 241	1
Commander Naval Ship Engineering Center Center Building Prince Georges Center Hyattsville, Maryland 20782	
Attn: R. Fuss	1
Commander Naval Ship Research and Development Center Bethesda, Maryland 20034 (SNWDI Only Attn: Mrs. M. Birkhead Code 5815.6)	
Attn: Mr. Habib	1
DEPARTMENT OF THE AIR FORCE	
AF Cambridge Research Laboratories, AFSC L.G. Hanscom Field Bedford, Massachusetts 01730	
Attn: LWW, Mr. E.E. Bliamptis	1
AF Weapons Laboratory, AFSC Kirtland AFB, New Mexico 87117	
Attn: Mr. J. L. Bratton	1
CPT Stoney P. Chisolm	1
MAJ N.E. Lamping	1
DOGL, Technical Library	1
1stLt W.H. Krueger	1
CPT D.A. Matuska	1
MAJ H. Pahl	1
CPT J.L. Dick	1
Mr. R. Bunker	1

DISTRIBUTION (Cont)

	Copies
Headquarters Air Force Systems Command Andrews AFB Washington, D.C. 20331	
Attn: DEE LtCol J. Choromokos	1
DLW, Capt Gurner	1
Space and Missile Systems Organization, AFSC Norton AFB, California 92409	
Attn: Maj M. Castillo	1
Headquarters United States Air Force Washington, D.C. 20330	
Attn: PRE (Director, Civil Engineering)	1
RDQPM, 1C366	1
RDQPN, 1D425	1
RDQS	1
RDP	1
Headquarters Foreign Technology Division Wright-Patterson AFB, OH 45433	
Attn: Capt B.D. Green	1
W.L. Dixon	1
Commander Rome Air Development Center Griffiss AFB, NY 13440	
Attn: Documents Library	1
Space and Missile Systems Organization P.O. Box 92960 Worldway Postal Center Los Angeles, CA 90009	
Attn: RSSE	1
AF Institute of Technology Wright-Patterson AFB Ohio 45433	
Attn: CES	1
Technical Library, Bldg. 640, Area B	1
Commander Aeronautical Systems Division AFSC Wright-Patterson AFB, Ohio 45433	
Attn: DEE	1
Technical Library	1

DISTRIBUTION (Cont)

	Copies
Director Air University Library Maxwell AFB, AL 36112	
Attn: LDE	1
Commander Armament Development & Test Center Eglin AFB, FL 32542	
Attn: DEE	1
Technical Library	1
Air Force Office of Scientific Research 1400 Wilson Blvd. Arlington, VA 22209	
Attn: Document Control	1
OTHER GOVERNMENT OFFICES	
Environmental Protection Agency Western Environmental Research Laboratories P.O. Box 15027 Las Vegas, Nevada 89114	
Attn: Don Rockwell	1
Department of the Interior U.S. Geological Survey 601 E. Cedar Street Flagstaff, Arizona 86001	
Attn: D.J. Roddy	1
Director National Security Agency Ft. George C. Meade, MD 20755	
Attn: E. Butla	1
U.S. Dept. of Interior Geologic Survey Water Resources Division P.O. Box 4369 Albuquerque, NM 87106	
Attn: F. Koopman	1
J. Mercer	1
U.S. Dept. of Interior Geologic Survey Branch of Regional Geophysics, Bldg. 25 Denver, CO 80910	
Attn: K. Watson	1

DISTRIBUTION (Cont)

	Copies
ALLIED AGENCIES	
Director Admiralty Surface Weapons Establishment (ASWE) Ministry of Defense Pottsdown, Cosham, Portsmouth PO6 4AA United Kingdom	
Attn: D.S.G. Mullens	1
Senior Superintendent Atomic Weapons Research Establishment Faulness South End on Sea Essex, England	
Attn: Frank Woods	1
Neil Thumptson	1
Chief Superintendent Defence Research Establishment, Suffield Ralston, Alberta, Canada	
Attn: B.G. Laidlaw	1
J. Watson	1
J.H.B. Anderson	1
B.R. Long	1
S.B. Mellsen	1
Canadian General Electric for A.P.R. Lambert	1
Naval Construction Research Establishment St. Leonard's Hill Dunfermline, Fife, Scotland	
Attn: W.D. Hart	1
ATOMIC ENERGY COMMISSION	
Director Los Alamos Scientific Laboratory P.O. Box 1663 Los Alamos, NM 87544	
Attn: Reports Library	1

DISTRIBUTION (Cont)

	Copies
DEPARTMENT OF DEFENSE CONTRACTORS	
University of Denver Colorado Seminary Denver Research Institute P.O. Box 10127 Denver, Colorado 80302	
Attn: J. Wisotski	1
EG&G Inc. P.O. Box 4339 Albuquerque, New Mexico 87106	
Attn: R. Edgell	1
B.H. Collins	1
Marc J. Colvin, Jr.	1
General Electric Company Tempo-Center for Advance Studies 816 State Street (P.O. Drawer QQ) Santa Barbara, California 93102	
Attn: Warren W. Chan, DASIAC	1
Lovelace Foundation for Medical Education and Res. 5200 Gibson Blvd., S.E. Albuquerque, New Mexico 87108	
Attn: R.K. Jones	1
Dr. E.R. Fletcher	1
D.R. Rickmond	1
Meteorology Research, Inc. 464 West Woodbury Road Altadena, California 91001	
Attn: W.D. Green	1
Nuclear Defense Research Corp. of New Mexico, Inc. 5301 Central Avenue, N.E. Albuquerque, New Mexico 87108	
Attn: D. Tiano	
Pan American Airways P.O. Box 2057 Jackass Flats, Nevada 89023	
Attn: A. Montrose	1

DISTRIBUTION (Cont)

	Copies
Physics International Company 2700 Merced Street San Leandro, California 94577	
Attn: F.M. Sauer	1
Stanford Research Institute 333 Ravenswood Avenue Menlo Park, California 94025	
Attn: Mr. Stan Martin	1
Technology International Corporation 75 Wiggins Avenue Bedford, Massachusetts 01730	
Attn: W.P. Boquist	1
Texas Instruments, Inc. P.O. Box 5474 Dallas, Texas 75222	
Attn: Mr. Ellis	1
TRW Systems Group One Space Park Redondo Beach, California 90278	
Attn: Dr. P. Lieberman	1
Weidlinger, Paul, Consulting Engineer 110 East 59th Street New York, New York 10022	
Attn: Dr. W. Baron	1
Aerospace Corporation P.O. Box 95085 Los Angeles, CA 90045	
Attn: Library Acquisitions Group	1
Applied Theory Inc. 1010 Westwood Blvd. Los Angeles, CA 90024	
Attn: J. Trulio	1
N.K. Perl	1
Boeing Company, The P.O. Box 3707 Seattle, WA 98124	
Attn: G. Jones	1
L. Luschei	1
R. Carlson	1

DISTRIBUTION (Cont)

	Copies
California Research and Technology, Inc. 19720 Ventura Blvd., Suite G Woodland Hills, CA 93164	
Attn: M. Rosenblatt	1
M. Wagner	1
Consulting and Special Engineering Services, Inc. P.O. Box 1260 Redlands, CA 92373	
Attn: J.L. Merritt	1
Martin Marietta Corporation Denver Division P.O. Box 179 Denver, CO 80201	
Attn: Document Control	1
Martin Marietta Corporation Orlando Division P.O. Box 5837 Orlando, FL 32805	
Attn: Document Control	1
McDonnel Douglas Astro. Co. 5301 Bolsa Avenue Huntington Beach, CA 92647	
Attn: K. Narasimhan	1
K.A. Heinly	1
K. McClymon	1
R&D Associates P.O. Box 3580 Santa Monica, CA 90403	
Attn: E.J. Chapyak	1
H.F. Cooper, Jr.	1
S. Schuster	1
Science Applications Inc. 1701 N. Fort Meyer Dr., Suite 908 Arlington, VA 22209	
Attn: Dr. J. McRary	1
J.E. Cockayne	1
Shock Hydrodynamics Inc. 15010 Ventura Blvd. Sherman Oaks, CA 91413	
Attn: J.W. McDonald	1
G. Ialongo	1

DISTRIBUTION (Cont)

	Copies
Systems, Science and Software P.O. Box 1620 La Jolla, CA 92037	
Attn: Dr. R. Duff	1
J.W. Kirsch	1
T.D. Riney	1
D.R. Grine	1
Technology International Corp. 75 Wiggins Avenue Bedford, MA 01730	
Attn: Dr. H. Pratt	1
S. Green	1
University of Illinois Civil Engineering Department 111 Talbot Laboratory Urbana, Il 61801	
Attn: Dr. N. Newmark	2
University of New Mexico CERF Box 188 University Station Albuquerque, NM 87103	
Attn: D. Stephenson	1
L. Hooks	1
D.S. Srinivasa	5

☆U.S. GOVERNMENT PRINTING OFFICE: 1973-747-302/103